⚠Note • Please read rating and ⚠CAUTION (for storage, operating, rating, soldering, mounting and handling) in this catalog to prevent smoking and/or burning, etc.
• This catalog has only typical specifications because there is no space for detailed specifications. Therefore, please review our product specifications or consult the approval sheet for product specifications before ordering.

P37E.pdf
Feb.1,2012

Piezoelectric Sound Components



muRata Innovator in Electronics

Murata Manufacturing Co., Ltd.

Cat.No.P37E-24

EU RoHS Compliant

- All the products in this catalog comply with EU RoHS.
- EU RoHS is "the European Directive 2011/65/EU on the Restriction of the Use of Certain Hazardous Substances in Electrical and Electronic Equipment."
- For more details, please refer to our website 'Murata's Approach for EU RoHS' (http://www.murata.com/info/rohs.html).

CONTENTS

PIEZORINGER® and "PIEZORINGER" in this catalog are the trademarks of Murata Manufacturing Co., Ltd.

Part Numbering — 2
Application Matrix — 4
1 Piezoelectric Diaphragms — 5
External Drive Type — 5
Self Drive Type — 6
● Piezoelectric Diaphragms Notice — 7
2 Piezoelectric Sounders External Drive Pin Type — 8
● Piezoelectric Sounders (External Drive Pin Type) Circuit/Notice — 13
3 Piezoelectric Sounders External Drive Pin Type Taping — 14
● Piezoelectric Sounders (External Drive Pin Type Taping) Circuit/Notice — 16
4 Piezoelectric Sounders External Drive Lead Wire Type — 17
● Piezoelectric Sounders (External Drive Lead Wire Type) Circuit/Notice — 19
5 Piezoelectric Sounders External Drive SMD Type — 20
● Piezoelectric Sounders (External Drive SMD Type) Circuit/Notice — 22
6 Piezoelectric Ringers (PIEZORINGER®) — 23
Pin Type — 23
Lead Wire Type — 23
● Piezoelectric Ringers (PIEZORINGER®) Notice — 25
7 Piezoelectric Sounders Self Drive Pin Type — 26
● Piezoelectric Sounders (Self Drive) Notice — 27
8 Piezoelectric Buzzers Pin Type — 28
● Piezoelectric Buzzers Notice — 29
Piezoelectric Sound Components Notice — 30
Package — 31

● Part Numbering

Piezoelectric Diaphragms

(Part Number) 7 N B -31R2 DM -1R5 L 10

❶ ❷ ❸ ❹ ❺ ❻ ❼ ❽ ❾

❶Product ID

Product ID	
7	Ceramic Material

❷Material

Code	Metal Plate Material
B	Brass
N	Nickel Alloy
S	SUS

❸Product

Code	Product
B	Piezoelectric Diaphragms

❹Metal Plate Diameter

Code	Metal Plate Diameter
-31R2	A hyphen (-) plus four-digit alphanumerics express metal plate outer dimensions. A decimal point is expressed by the capital letter "**R**."

If there is no decimal point, the decimal point code is omitted.

❺Form of Piezoelectric Style

Code	Form of Piezoelectric Style
DM	Two digits express the shape of ceramics.

For an Ag electrode, this digit remains blank; the corresponding code is omitted.

❻Resonant Frequency Type

Code	Resonant Frequency (kHz)
-1R5	A hyphen (-) and three-digit alphanumerics express resonant frequency. A decimal point is expressed by the capital letter "**R**."

If there is no decimal point, the decimal point code is omitted.

❼With Feedback Electrode

Code	With Feedback Electrode
C	With Feedback Electrode
—	Without Feedback Electrode

❽Product Specification

Code	Product Specification
L	With lead (available for RoHS)
—	No lead (omitted)

❾Individual Specification Code

Code	Individual Specification Code
10	These digits express a lead length, lead number, and the presence/absence of a connector.

If the product has no individual specification, the corresponding code is omitted.

Piezoelectric Sounders/Piezoelectric Buzzers/Piezoelectric Ringers (PIEZORINGER®)

(Part Number) PK M 13 E P YH 40 00 P -A0
❶ ❷ ❸ ❹ ❺ ❻ ❼ ❽ ❾ ❿

❶Product ID

Product ID	
PK	Piezoelectric Sound Components

❷Product

Code	Product
M	Sounder, Ringer
B	Buzzer

❸Outer Dimensions

Expressed by two figures in mm.

Ex.)

Code	Outer Dimensions
13	ø12.6mm

❹Drive

Code	Drive
E	External-Drive
S	Self-Drive

❺Outer Electrode Style

Code	Outer Electrode Style
P	Pin Type
W	Lead Wire Type

❻Structure

Code	Structure
T□	Standing Type
P□	Flat Type Auto-assemble
Y□	Flat Type/Available for Taping
C□	Flat Type/Semi-auto-assemble
□	Exclude above mentioned

□ signifies specification of the outer electrode.

❼Oscillating Frequency Type

Code	Oscillating Frequency Type
40	Expressed resonant frequency by two-digit alphanumerics. The unit is in 100 hertz (Hz). In case of 4kHz (4000Hz), expressed as "40."

❽Individual Specification Code

Code	Individual Specification Code
00	Two digits express custom specification in characteristics.

❾Special Quality Guarantee

Code	Special Quality Guarantee
P	Post Plated Terminal
—	Blank

❿Packaging

Code	Packaging
-B0	Bulk
-A0	Radial Taping

Radial taping is not available for all types.
Please contact us.

SMD Piezoelectric Sounder

(Part Number) PK LCS 1212 E 40 01 -R1
❶ ❷ ❸ ❹ ❺ ❻ ❼

❶Product ID

Product ID	
PK	Piezoelectric Sound Components

❷Product

Code	Product
LCS	SMD Sounder

❸Dimensions

Code	Outer Dimensions
1212	□12mm

❹Drive

Code	Drive
E	External Drive

❺Oscillating Frequency Type

Code	Oscillating Frequency Type
40	Expressed resonant frequency by two-digit alphanumerics. The unit is in 100 hertz (Hz.) 4kHz (4000Hz) is denoted as "40."

❻Individual Specification Code

Code	Individual Specification Code
01	Two digits express specific specification in characteristics.

❼Packaging

Code	Packaging
-R1	Plastic taping

Application Matrix

		Application / Part Number	Phone	Watch	Clock	Medical Equip-ment	Fire/ Gas Alarm	Digital Camera	Toy	Bar Code Scanner	Printer	Note-PC PDA	DVD-Player	Micro-wave Oven	A/C	Fan Heater	Cluster
Piezoelectric Diaphragm	External Drive Type	7BB-12-9		●	●	●		●	●			●					
		7BB-15-6			●	●		●	●			●					
		7BB-20-3	●	●	●	●	●		●	●							
		7BB-20-6			●	●		●	●			●					
		7BB-20-6L0			●	●			●			●					
		7BB-27-4	●		●	●			●	●							
		7BB-27-4L0	●		●	●			●	●							
		7BB-35-3	●		●				●	●							
		7BB-35-3L0	●		●		●		●	●							
		7BB-41-2	●														
		7BB-41-2L0	●														
		7NB-31R2-1				●	●										
	Self Drive Type	7BB-20-6C	●					●	●								
		7BB-20-6CL0	●					●	●								
		7BB-27-4C	●				●		●	●							
		7BB-27-4CL0	●				●		●	●							
		7BB-35-3C	●				●			●							
		7BB-35-3CL0	●				●			●							
		7BB-41-2C	●														
		7BB-41-2CL0	●														
		7SB-34R7-3C					●										
Piezoelectric Sounder	External Drive Type	PKM13EPYH4000-A0	●		●	●		●	●	●	●	●	●		●	●	●
		PKM13EPYH4002-B0	●		●	●		●	●	●	●	●	●	●	●	●	●
		PKM17EPP-2002-B0	●		●	●			●	●	●		●	●	●	●	●
		PKM17EPPH4001-B0	●		●	●			●	●	●		●	●	●	●	●
		PKM17EWH2001	●		●	●		●	●	●	●	●	●		●		
		PKM17EWH4000	●		●	●		●	●	●	●	●	●		●		
		PKM22EPH2001							●		●		●	●	●	●	●
		PKM22EPPH2001-B0	●		●	●			●		●		●	●	●	●	●
		PKM22EPPH4001-B0	●		●	●			●		●		●	●	●	●	●
		PKM22EPPH4005-B0	●		●	●			●		●		●	●	●	●	
		PKM22EPPH4007-B0	●		●	●	●		●		●		●	●	●	●	●
		PKM22EPTH2001-B0							●		●		●	●	●	●	
		PKLCS1212E2400-R1	●			●		●	●	●	●	●			●		
		PKLCS1212E24A0-R1															●
		PKLCS1212E4001-R1	●			●		●	●	●	●	●			●		
		PKLCS1212E40A1-R1															●
	Self Drive Type	PKM24SPH3805	●				●		●					●	●	●	
Piezoelectric Buzzer		PKB24SPCH3601-B0	●			●			●		●	●	●		●	●	
Piezoelectric Ringer		PKM33EPH1201C	●														
		PKM34EWH1101C	●														
		PKM34EWH1201C	●														
		PKM44EWH1001C	●														

There are various applications besides those listed in the above table, including:
Alarm, Laundry Machine, Bath, Intercom, Chime, Back Buzzer, ME Instruments, Measuring Instruments, Vending Machine, Calculator, Automobile, Communication Radio, Hemadynamometer, Thermometer, Facsimile, Audio Timer, Automatic Controlling Devices.

Piezoelectric Sound Components

Piezoelectric Diaphragms

■ Features

1. Clear sound
2. Ultra thin and lightweight
3. No contacts; therefore, noiseless and highly reliable
4. Low power consumption for voltage type

■ Applications

Clocks/Calculators/Digital camera/Various alarms
(Burglar alarms, etc.)

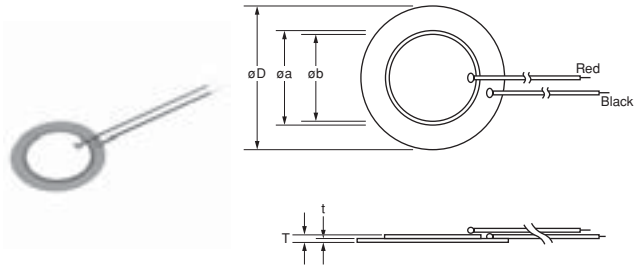

External Drive Type

Part Number	Resonant Frequency (kHz)	Resonant Impedance (ohm)	Capacitance (nF)	Plate Size dia. D (mm)	Element Size dia. a (mm)	Electrode Size dia. b (mm)	Thickness T (mm)	Plate Thickness t (mm)	Plate Material
7BB-12-9	9.0 ±1.0kHz	1000 max.	8.0 ±30% [1kHz]	12.0	9.0	8.0	0.22	0.10	Brass
7BB-15-6	6.0 ±1.0kHz	800 max.	10.0 ±30% [1kHz]	15.0	10.0	9.0	0.22	0.10	Brass
7BB-20-3	3.6 ±0.6kHz	500 max.	20.0 ±30% [1kHz]	20.0	14.0	12.8	0.22	0.10	Brass
7BB-20-6	6.3 ±0.6kHz	350 max.	10.0 ±30% [1kHz]	20.0	14.0	12.8	0.42	0.20	Brass
7BB-20-6L0	6.3 ±0.6kHz	1000 max.	10.0 ±30% [1kHz]	20.0	14.0	12.8	0.42	0.20	Brass (with Lead Wire: AWG32 Length 50mm)
7BB-27-4	4.6 ±0.5kHz	200 max.	20.0 ±30% [1kHz]	27.0	19.7	18.2	0.54	0.30	Brass
7BB-27-4L0	4.6 ±0.5kHz	300 max.	20.0 ±30% [1kHz]	27.0	19.7	18.2	0.54	0.30	Brass (with Lead Wire: AWG32 Length 50mm)
7BB-35-3	2.8 ±0.5kHz	200 max.	30.0 ±30% [1kHz]	35.0	25.0	23.0	0.53	0.30	Brass
7BB-35-3L0	2.8 ±0.5kHz	200 max.	30.0 ±30% [1kHz]	35.0	25.0	23.0	0.53	0.30	Brass (with Lead Wire: AWG32 Length 50mm)
7BB-41-2	2.2 ±0.3kHz	250 max.	30.0 ±30% [1kHz]	41.0	25.0	23.0	0.63	0.40	Brass
7BB-41-2L0	2.2 ±0.3kHz	300 max.	30.0 ±30% [1kHz]	41.0	25.0	23.0	0.63	0.40	Brass (with Lead Wire: AWG32 Length 50mm)
7NB-31R2-1	1.3 ±0.5kHz	300 max.	40.0 ±30% [120Hz]	31.2	19.7	18.2	0.22	0.10	Nickel Alloy



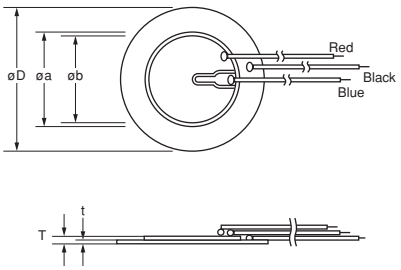

Self Drive Type

Part Number	Resonant Frequency (kHz)	Resonant Impedance (ohm)	Capacitance (nF)	Plate Size dia. D (mm)	Element Size dia. a (mm)	Electrode Size dia. b (mm)	Thickness T (mm)	Plate Thickness t (mm)	Plate Material
7BB-20-6C	6.3 ±0.6kHz	500 max.	8.5 ±30% [1kHz]	20.0	14.0	12.8	0.42	0.20	Brass
7BB-20-6CL0	6.3 ±0.6kHz	800 max.	8.5 ±30% [1kHz]	20.0	14.0	12.8	0.42	0.20	Brass (with Lead Wire: AWG32 Length 50mm)
7BB-27-4C	4.6 ±0.5kHz	200 max.	18.0 ±30% [1kHz]	27.0	19.7	18.2	0.54	0.30	Brass
7BB-27-4CL0	4.6 ±0.5kHz	350 max.	18.0 ±30% [1kHz]	27.0	19.7	18.2	0.54	0.30	Brass (with Lead Wire: AWG32 Length 50mm)
7BB-35-3C	2.8 ±0.5kHz	200 max.	26.0 ±30% [1kHz]	35.0	25.0	23.0	0.53	0.30	Brass
7BB-35-3CL0	2.8 ±0.5kHz	200 max.	26.0 ±30% [1kHz]	35.0	25.0	23.0	0.53	0.30	Brass (with Lead Wire: AWG32 Length 50mm)
7BB-41-2C	2.2 ±0.3kHz	250 max.	24.0 ±30% [1kHz]	41.0	25.0	23.0	0.63	0.40	Brass
7BB-41-2CL0	2.2 ±0.3kHz	350 max.	24.0 ±30% [1kHz]	41.0	25.0	23.0	0.63	0.40	Brass (with Lead Wire: AWG32 Length 50mm)
7SB-34R7-3C	3.1 ±0.3kHz	150 max.	24.0 ±30% [1kHz]	34.7	25.0	23.4	0.50	0.25	Stainless

■ Node Diameter

Part Number	Node Diameter (mm)
7BB-20-6C	ø13.5
7BB-27-4C	ø17.5
7BB-35-3C	ø22.5
7BB-41-2C	ø26.5

• Sound diaphragms without feedback electrode also have the same node diameters.

Piezoelectric Diaphragms Notice

■ Notice (Soldering and Mounting)

1. Applying load on the center area of the diaphragm may cause cracking in the ceramic element. When the diaphragm is supported by the edge, the load should be applied only around the edge.
2. Please consult with a Murata representative if soldering of the component is needed.

■ Notice (Handling)

1. Please do not touch the component with a bare hand because the electrode may become corroded.
2. The component may be damaged if mechanical stress exceeding specifications is applied.
3. Take care to protect the operating circuit from surge voltage resulting from excessive force, falling, shock or temperature change.
4. If DC voltage is applied to the component, silver migration may occur. Please strictly avoid subjecting the component to DC voltage for long periods.
5. The resistor should be used as shown in Fig. A.
   A suitable resistance value should be chosen, preferably 1kΩ to 2kΩ. Instead of this measure, a diode may also be applied as shown in Fig. B.

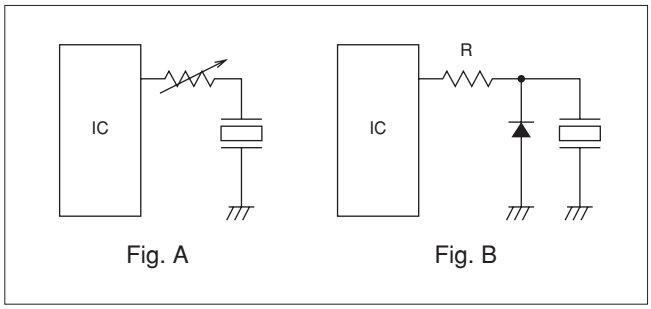

Fig. A Fig. B

6. Avoid excessive pulling of the lead wire because the wire may break or the soldering point come off.

Piezoelectric Sound Components

Piezoelectric Sounders External Drive Pin Type

2

Microcomputers are widely used for microwave ovens, air conditioners, cars, toys, timers, and alarm equipment. Externally driven piezoelectric sounders are used in digital watches, electronic calculators, telephones and other equipment. They are driven by a signal (ex.: 2048Hz or 4096Hz) from an LSI and provide melodious sound.

■ Features

1. Low power consumption
2. No contacts; therefore, noiseless and highly reliable

■ Applications

1. Various office equipment such as PPCs, printers and keyboards
2. Audible feedback-response to some action or input.
3. Confirmation sound of various audio equipment



PKM13EPYH4002-B0

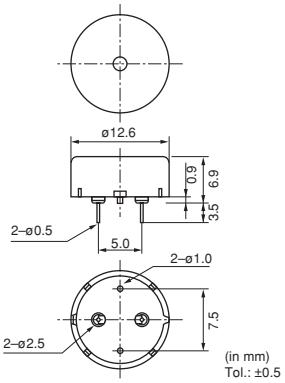

(in mm)
Tol.: ±0.5



PKM17EPP-2002-B0

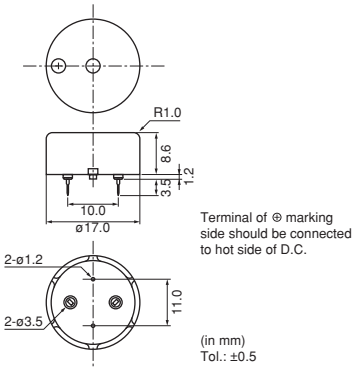

(in mm)
Tol.: ±0.5



PKM17EPPH4001-B0

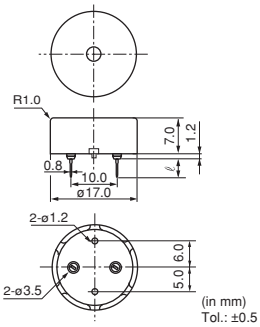

(in mm)
Tol.: ±0.5

Part Number	ℓ
PKM17EPPH4001-B0	6.5
PKM17EPPH4002-B0	3.5



PKM22EPH2001

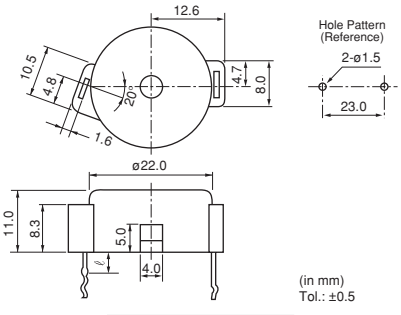

(in mm)
Tol.: ±0.5

Part Number	ℓ
PKM22EPH2001	4.0
PKM22EPH2002	8.0
PKM22EPH2003	12.0



PKM22EPPH2001-B0

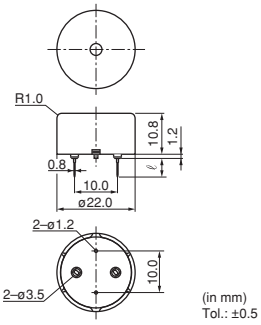

(in mm)
Tol.: ±0.5

Part Number	ℓ
PKM22EPPH2001-B0	6.5
PKM22EPPH2002-B0	3.5



PKM22EPPH4001-B0

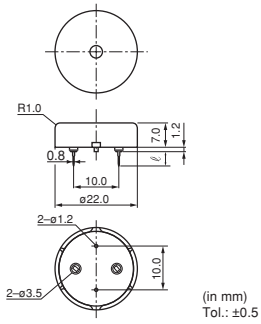

(in mm)
Tol.: ±0.5

Part Number	ℓ
PKM22EPPH4001-B0	6.5
PKM22EPPH4002-B0	3.5

Continued on the following page.

Continued from the preceding page.



PKM22EPPH4005-B0

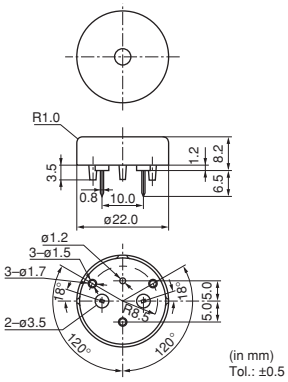

(in mm)
Tol.: ±0.5



PKM22EPPH4007-B0

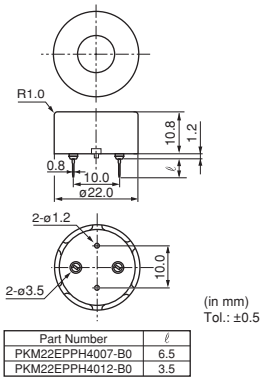

(in mm)
Tol.: ±0.5

Part Number	ℓ
PKM22EPPH4007-B0	6.5
PKM22EPPH4012-B0	3.5



PKM22EPTH2001-B0

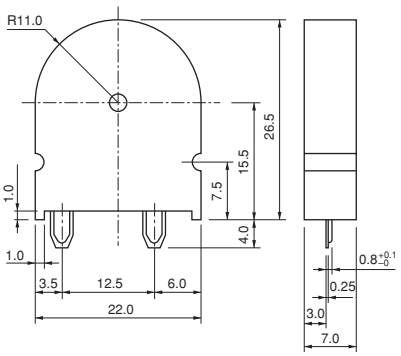

(in mm)
Tol.: ±0.5

Part Number	Sound Pressure Level (dB)	Sound Pressure Level (Ref. only) (dB)	Operating Voltage Range	Capacitance (nF)	Operating Temp. Range (°C)	Storage Temp. Range (°C)
PKM13EPYH4002-B0	70 min. [3Vp-p,4kHz,square wave,10cm]	70 min. [1Vrms,4kHz,sine wave,10cm]	30.0Vp-p max.	5.5 ±30% [1kHz]	-40 to +85	-40 to +85
PKM17EPP-2002-B0	70 min. [3Vo-p,2kHz,square wave,10cm]	70 min. [1Vrms,2kHz,sine wave,10cm]	25.0Vo-p max. [with polarity]	34.0 ±30% [120Hz]	-20 to +70	-30 to +80
PKM17EPPH4001-B0	72 min. [3Vp-p,4kHz,square wave,10cm]	72 min. [1Vrms,4kHz,sine wave,10cm]	25.0Vp-p max.	7.0 ±30% [1kHz]	-20 to +70	-30 to +80
PKM22EPH2001	75 min. [3Vp-p,2kHz,square wave,10cm]	75 min. [1Vrms,2kHz,sine wave,10cm]	25.0Vp-p max.	17.0 ±30% [120Hz]	-20 to +70	-30 to +80
PKM22EPPH2001-B0	70 min. [3Vp-p,2kHz,square wave,10cm]	70 min. [1Vrms,2kHz,sine wave,10cm]	30.0Vp-p max.	19.0 ±30% [120Hz]	-20 to +70	-30 to +80
PKM22EPPH4001-B0	75 min. [3Vp-p,4kHz,square wave,10cm]	75 min. [1Vrms,4kHz,sine wave,10cm]	30.0Vp-p max.	12.0 ±30% [1kHz]	-20 to +70	-30 to +80
PKM22EPPH4005-B0	75 min. [3Vp-p,4kHz,square wave,10cm]	75 min. [1Vrms,4kHz,sine wave,10cm]	30.0Vp-p max.	12.0 ±30% [1kHz]	-20 to +70	-30 to +80
PKM22EPPH4007-B0	85 min. [3Vp-p,4kHz,square wave,10cm]	85 min. [1Vrms,4kHz,sine wave,10cm]	30.0Vp-p max.	12.0 ±30% [1kHz]	-20 to +70	-30 to +80
PKM22EPTH2001-B0	70 min. [3Vp-p,2kHz,square wave,10cm]	70 min. [1Vrms,2kHz,sine wave,10cm]	25.0Vp-p max.	19.0 ±30% [120Hz]	-20 to +70	-30 to +80

2

■ Freq. Response (Square Wave 3Vp-p, 10cm)

PKM13EPYH4002-B0

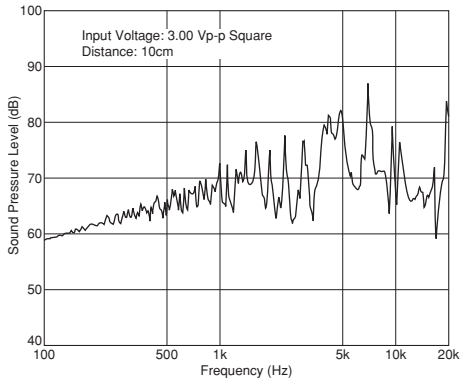

PKM17EPP-2002-B0

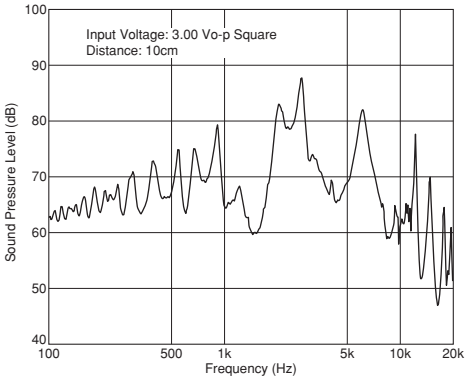

PKM17EPPH4001-B0

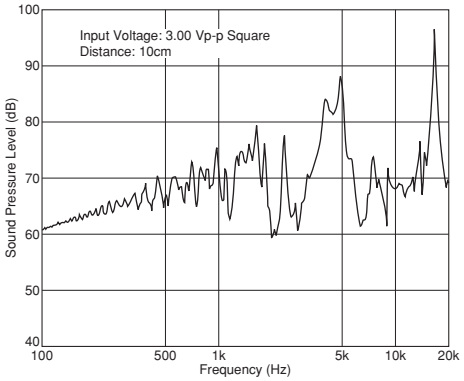

PKM22EPH2001

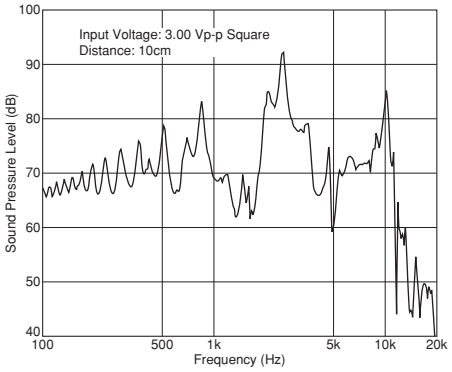

PKM22EPPH2001-B0

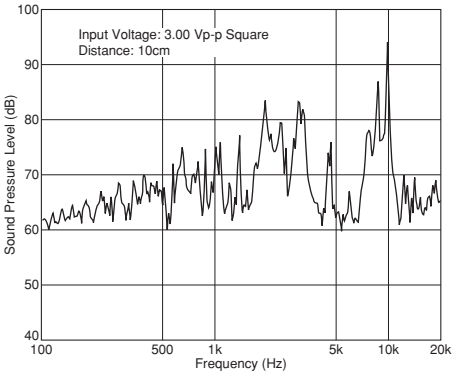

PKM22EPPH4001-B0

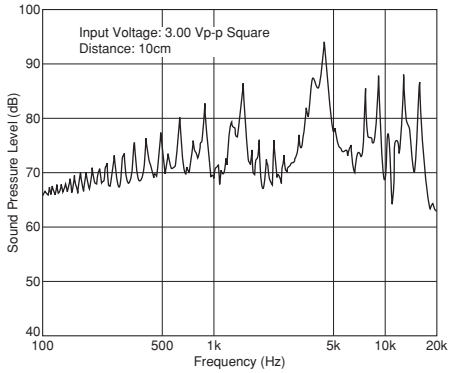

PKM22EPPH4005-B0

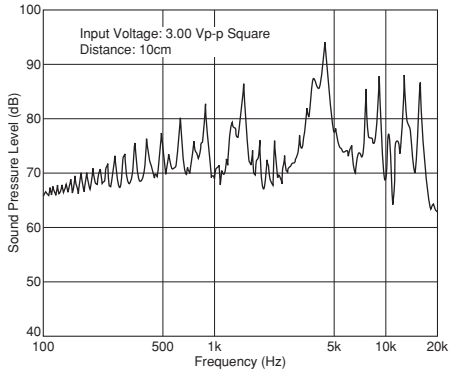

PKM22EPPH4007-B0

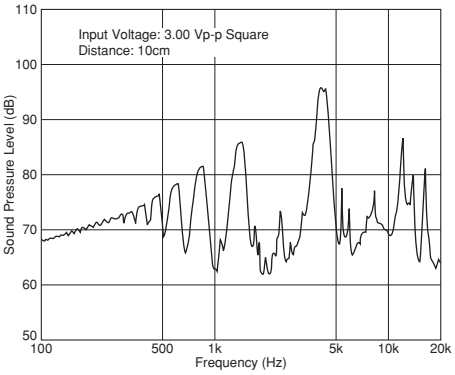

Continued on the following page.

Continued from the preceding page.

■ Freq. Response (Square Wave 3Vp-p, 10cm)

PKM22EPTH2001-B0

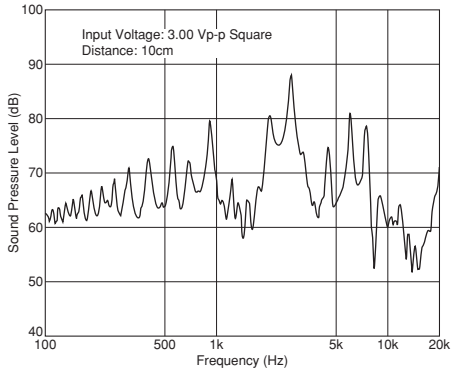

■ Freq. Response (Sine Wave 1Vrms, 10cm)

PKM13EPYH4002-B0

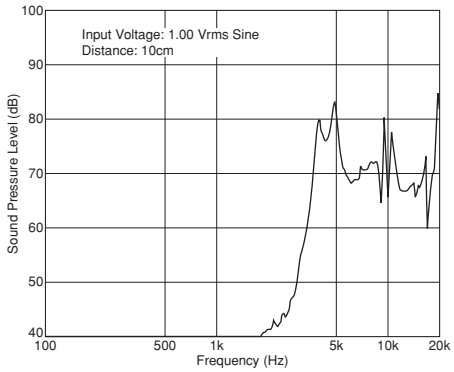

PKM17EPP-2002-B0

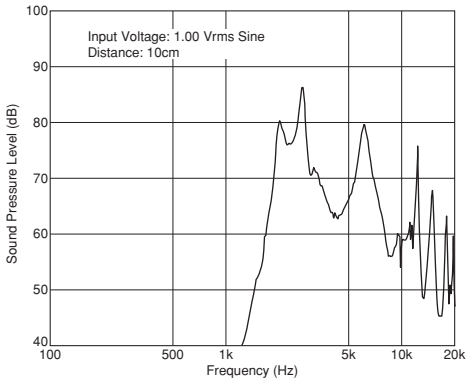

PKM17EPPH4001-B0

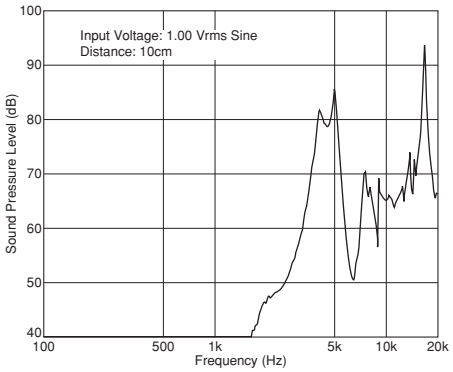

PKM22EPH2001

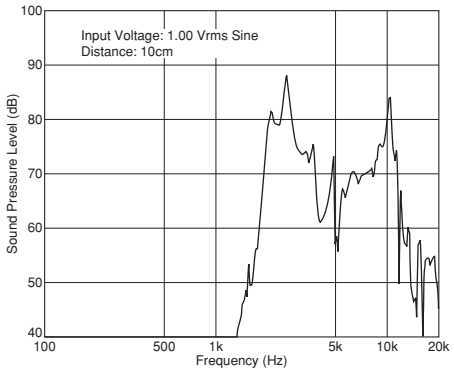

PKM22EPPH2001-B0

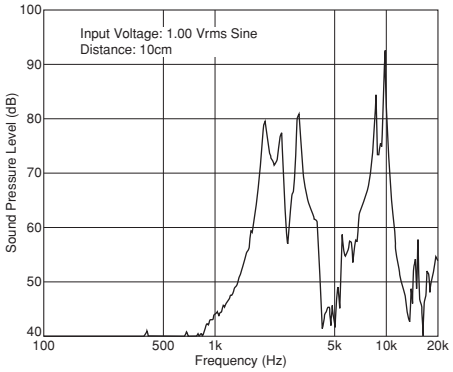

PKM22EPPH4001-B0

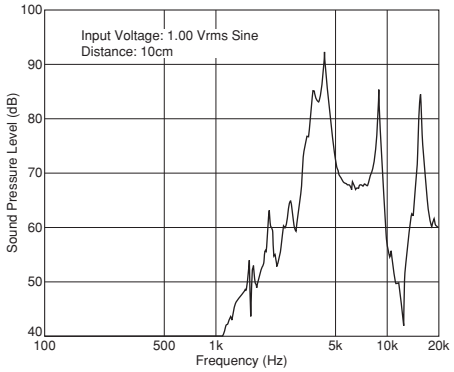

Continued on the following page.

Continued from the preceding page.

■ Freq. Response (Sine Wave 1Vrms, 10cm)

PKM22EPPH4005-B0

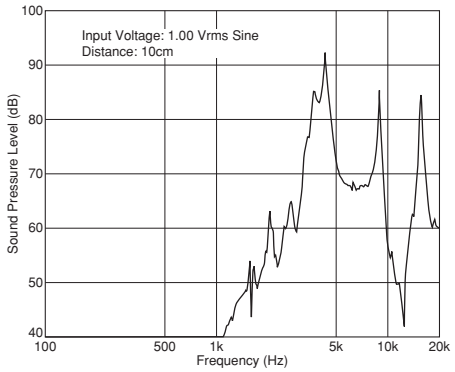

PKM22EPPH4007-B0

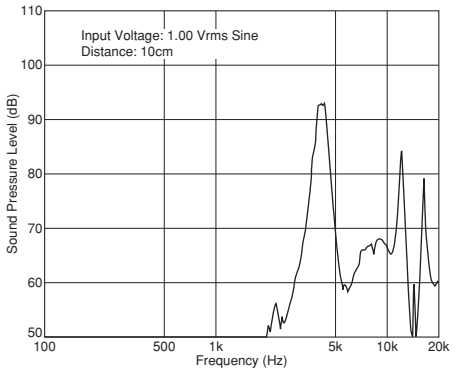

PKM22EPTH2001-B0

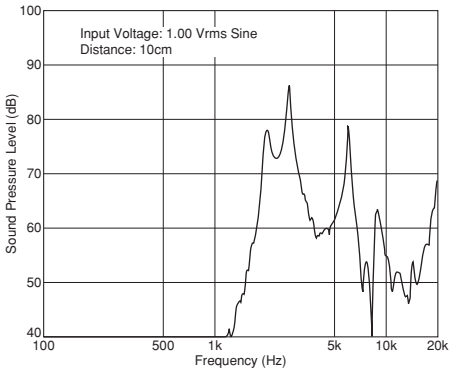

Piezoelectric Sounders (External Drive Pin Type) Circuit/Notice

■ Circuit

The following are examples of externally driven circuits.
(1) Unstable multi-vibrator using Tr.
(2) Circuits using inverters or NAND gates.

(1)

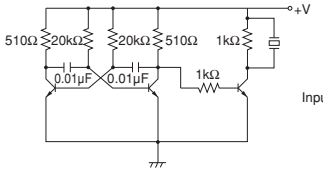

(2)

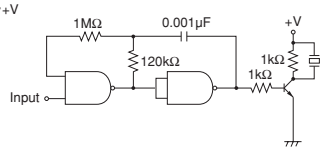

■ Notice (Soldering and Mounting)

1. Notice (Soldering and Mounting)
   (1) Soldering Iron
      (a) Immerse lead terminals up to 1.5mm from component's body in soldering bath of +260±5°C for 10±1.0 seconds, and then leave components in natural conditions for 4 hours.
      (b) Directly contact the lead terminal with the tip of the soldering iron for +350±5°C for 3.0±0.5 seconds, and then leave components in natural conditions for 4 hours.
   (2) Reflow
      The component cannot withstand reflow soldering.
2. Washing of the component is prohibited because it is not sealed.
3. For Part Numbers mentioned below, please do not insert the component on double-sided PCB with plated through hole. When melted solder touches the base of lead terminal, a part of the plastic case may melt, causing electrical failure.
   · Part Number
   PKM13EPYH4002-B0/PKM17EPP-2002-B0
   PKM17EPPH4001-B0/PKM22EPPH2001-B0
   PKM22EPPH4001-B0/PKM22EPPH4007-B0

■ Notice (Handling)

1. The component may be damaged if mechanical stress exceeding specifications is applied.
2. Take care to protect the operating circuit from surge voltage resulting from excessive force, falling, shock or temperature change.
3. If DC voltage is applied to the component, silver migration may occur. Please strictly avoid subjecting the component to DC voltage for long periods.
4. The resistor should be used as shown in Fig. A.
   A suitable resistance value should be chosen, preferably 1kΩ to 2kΩ. Instead of this measure, a diode may also be applied as shown in Fig. B.

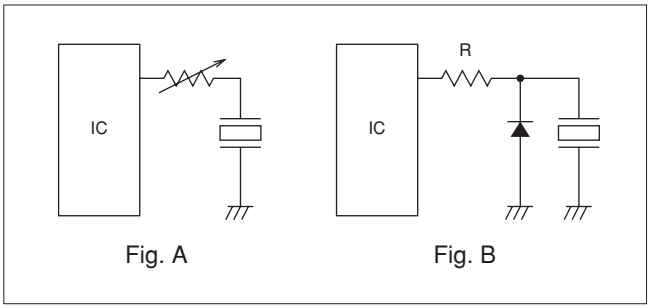

Fig. A Fig. B

5. Avoid excessive pulling of the lead wire because the wire may break or the soldering point come off.

Piezoelectric Sound Components

Piezoelectric Sounders External Drive Pin Type Taping

Taking advantage of extensive automatic insertion design technology and materials experience, Murata has developed standard taping type piezoelectric sounders.
This Murata technology supports labor and cost saving measures.



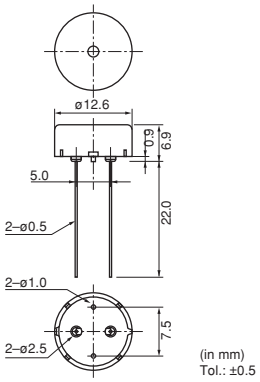

■ Features

1. Lead dimension: Improved mounting reliability (cut & clinch) due to round terminal
2. High, stable mountability
3. Ammo packaging

Part Number	Sound Pressure Level (dB)	Sound Pressure Level (Ref. only) (dB)	Operating Voltage Range	Capacitance (nF)	Operating Temp. Range (°C)	Storage Temp. Range (°C)
PKM13EPYH4000-A0	70 min. [3Vp-p,4kHz,square wave,10cm]	70 min. [1Vrms,4kHz,sine wave,10cm]	30.0Vp-p max.	5.5 ±30% [1kHz]	-40 to +85	-40 to +85

■ Freq. Response (Square Wave 3Vp-p, 10cm)

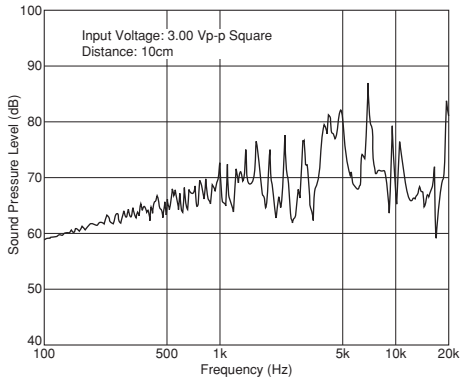

■ Freq. Response (Sine Wave 1Vrms, 10cm)

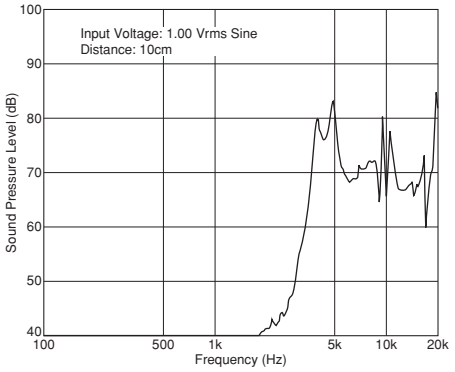

■ Taping Dimension

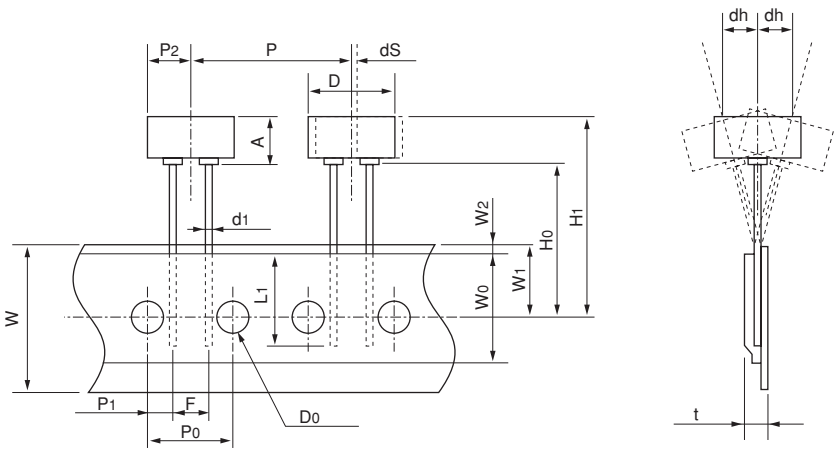

Item	Code	Nominal Value	Tol.	Notes
Width of diameter	D	ø12.6	±0.5	
Height of component	A	6.9	±0.5	
Dimensions of terminal	d_1	ø0.5	±0.1	
Lead length under the hold-down tape	L_1	8.0 min.	—	
Pitch of component	P	25.4	±0.5	
Pitch of sprocket	P_0	12.7	±0.2	Tolerance for Pitches 10×P_0=127±2mm
Length from hole center to lead	P_1	3.85	±0.7	
Length from hole center to component center	P_2	6.35	±0.7	
Lead spacing	F	5.0	±0.5	
Slant forward or backward	dh	0	±1.0	360°: 1mm max.
Width of carrier tape	W	18.0	±0.5	
Width of hold-down tape	W_0	12.5 min.	—	Hold-down tape does not exceed the carrier tape.
Position of sprocket hole	W_1	9.0	±0.5	
Gap of hold-down tape and carrier tape	W_2	2.0 max.	—	
Distance between the center of sprocket hole and lead stopper	H_0	18.0	±0.5	
Total height of component	H_1	26.0 max.	—	
Diameter of sprocket hole	D_0	ø4.0	±0.2	
Total thickness of tape	t	0.6	±0.2	
Body tilt	dS	0	±1.0	

(in mm)

Piezoelectric Sounders (External Drive Pin Type Taping) Circuit/Notice

■ Circuit

The following are examples of externally driven circuits.
(1) Unstable multi-vibrator using Tr.
(2) Circuits using inverters or NAND gates.

(1)

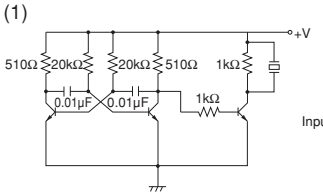

(2)

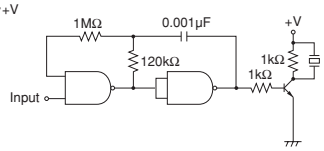

3

■ Notice (Soldering and Mounting)

1. Notice (Soldering and Mounting)
   (1) Soldering Iron
      (a) Immerse lead terminals up to 1.5mm from component's body in soldering bath of +260±5°C for 10±1.0 seconds, and then leave components in natural conditions for 4 hours.
      (b) Directly contact the lead terminal with the tip of the soldering iron for +350±5 °C for 3.0±0.5 seconds, and then leave components in natural conditions for 4 hours.
   (2) Reflow
      The component cannot withstand reflow soldering.
2. Please do not insert the component on double-sided PCB with plated through hole. When melted solder touches the base of lead terminal, a part of the plastic case may melt, causing electrical failure.
3. Washing of the component is not acceptable. Because it is not sealed.

■ Notice (Handling)

1. The component may be damaged if mechanical stress exceeding specifications is applied.
2. Take care to protect the operating circuit from surge voltage resulting from excessive force, falling, shock or temperature change.
3. If DC voltage is applied to the component, silver migration may occur. Please strictly avoid subjecting the component to DC voltage for long periods.
4. The resistor should be used as shown in Fig. A. A suitable resistance value should be chosen, preferably 1kΩ to 2kΩ. Instead of this measure, a diode may also be applied as shown in Fig. B.

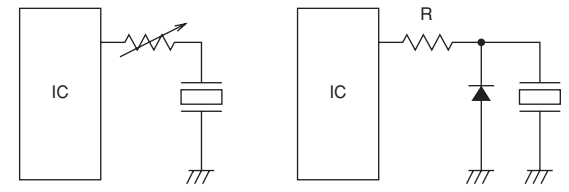

Fig. A Fig. B

5. Avoid excessive pulling of the lead wire because the wire may break or the soldering point come off.

Piezoelectric Sound Components

muRata

Piezoelectric Sounders External Drive Lead Wire Type

Microcomputers are widely used for microwave ovens, air conditioners, cars, toys, timers, and alarm equipment. Externally driven piezoelectric sounders are used in digital watches, electronic calculators, telephones and other equipment. They are driven by a signal (ex.: 2048Hz or 4096Hz) from an LSI and provide melodious sound.

■ Features

1. Low power consumption
2. No contacts; therefore, noiseless and highly reliable

■ Applications

1. Various office equipment such as PPCs, printers and keyboards
2. Audible feedback-response to some action or input.
3. Confirmation sound of various audio equipment



PKM17EWH2001

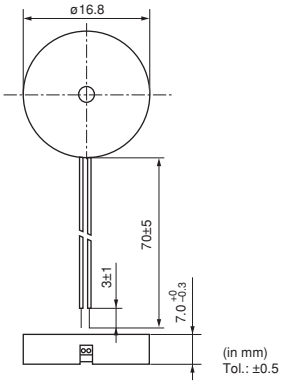



PKM17EWH4000

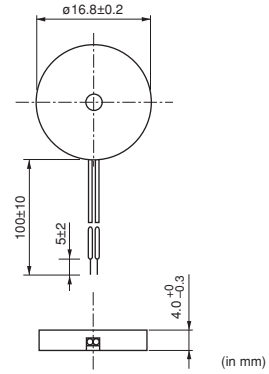

Part Number	Sound Pressure Level (dB)	Sound Pressure Level (Ref. only) (dB)	Operating Voltage Range	Capacitance (nF)	Operating Temp. Range (°C)	Storage Temp. Range (°C)
PKM17EWH2001	72 min. [3Vp-p,2kHz,square wave,10cm]	70 min. [1Vrms,2kHz,sine wave,10cm]	7.0Vp-p max.	40.0 ±30% [120Hz]	-20 to +70	-30 to +80
PKM17EWH4000	75 min. [3Vp-p,4kHz,square wave,10cm]	70 min. [1Vrms,4kHz,sine wave,10cm]	25.0Vp-p max.	9.5 ±30% [1kHz]	-20 to +70	-30 to +80

■ Freq. Response (Square Wave 3Vp-p, 10cm)

PKM17EWH2001

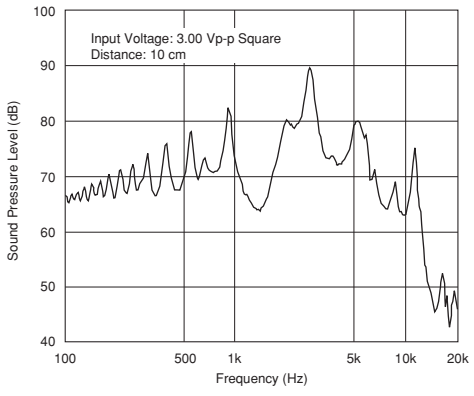

PKM17EWH4000

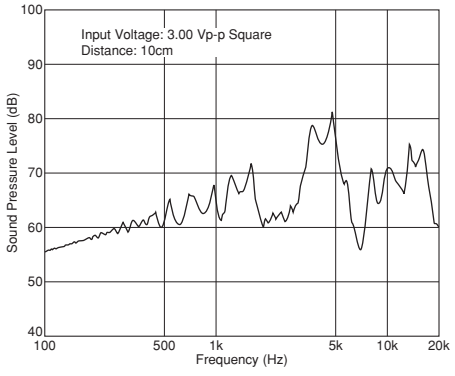

■ Freq. Response (Sine Wave 1Vrms, 10cm)

PKM17EWH2001

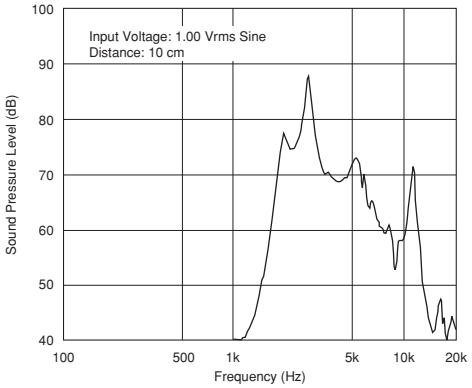

PKM17EWH4000

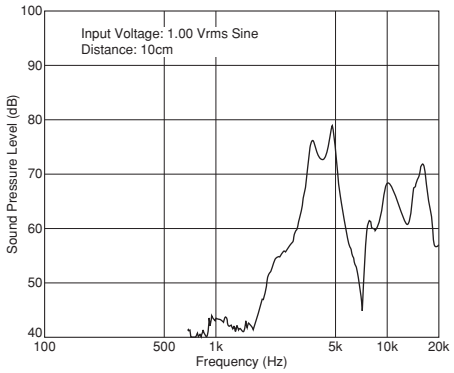

4

Piezoelectric Sounders (External Drive Lead Wire Type) Circuit/Notice

■ Circuit

The following are examples of externally driven circuits.
(1) Unstable multi-vibrator using Tr.
(2) Circuits using inverters or NAND gates.

(1)

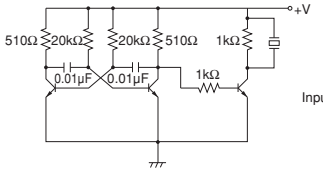

(2)

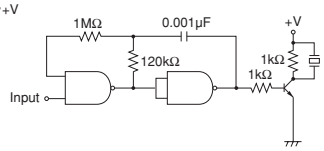

■ Notice (Soldering and Mounting)

Washing of the component is prohibited because it is not sealed.

■ Notice (Handling)

1. The component may be damaged if mechanical stress exceeding specifications is applied.
2. Take care to protect the operating circuit from surge voltage resulting from excessive force, falling, shock or temperature change.
3. If DC voltage is applied to the component, silver migration may occur. Please strictly avoid subjecting the component to DC voltage for long periods.
4. The resistor should be used as shown in Fig. A.
   A suitable resistance value should be chosen, preferably 1kΩ to 2kΩ. Instead of this measure, a diode may also be applied as shown in Fig. B.

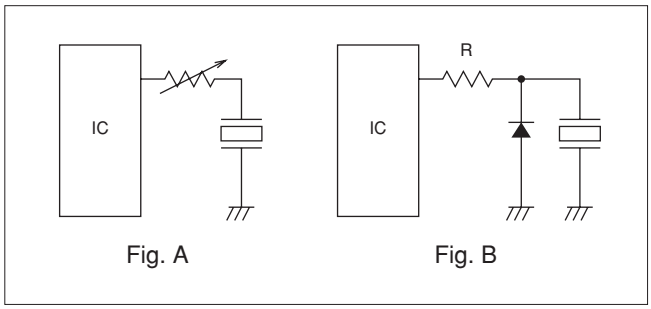

Fig. A Fig. B

5. Avoid excessive pulling of the lead wire because the wire may break or the soldering point come off.

Piezoelectric Sound Components

Piezoelectric Sounders External Drive SMD Type

Taking advantage of extensive acoustic and mechanical design technology and high performance ceramics, Murata has developed SMD piezoelectric sounders that suit the thin, high-density design of electronic equipment.

■ Features

1. Small, thin and lightweight
2. High sound pressure level and clear sound
3. Reflowable
4. Tape & Reel supply

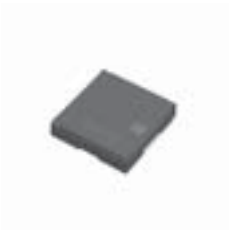

PKLCS1212E2400-R1

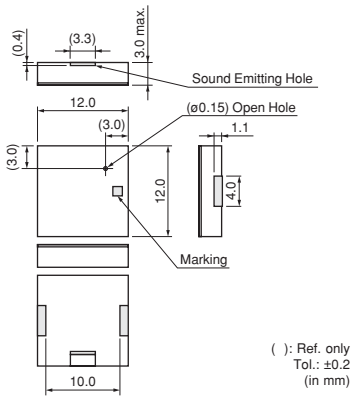

( ): Ref. only
Tol.: ±0.2
(in mm)



PKLCS1212E4001-R1

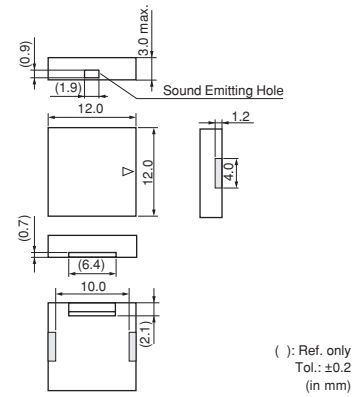

( ): Ref. only
Tol.: ±0.2
(in mm)

Part Number	Sound Pressure Level (dB)	Operating Voltage Range	Operating Temp. Range (°C)	Storage Temp. Range (°C)	Use
PKLCS1212E2400-R1	75 min.[±1.5 Vo-p,2.4kHz,square wave,10cm]	±12.5 Vo-p max.	-20 to +70	-30 to +80	For consumer electronics
PKLCS1212E24A0-R1	75 min.[±1.5 Vo-p,2.4kHz,square wave,10cm]	±12.5 Vo-p max.	-40 to +85	-40 to +85	For automotive electronics
PKLCS1212E4001-R1	75 min.[3Vp-p,4kHz,square wave,10cm]	25 Vp-p max.	-20 to +70	-30 to +80	For consumer electronics
PKLCS1212E40A1-R1	75 min.[3Vp-p,4kHz,square wave,10cm]	25 Vp-p max.	-40 to +85	-40 to +85	For automotive electronics

■ Standard Land Pattern Dimensions

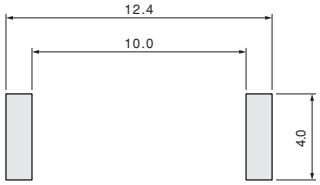

(in mm)

■ Freq. Response (Square Wave 3Vp-p, 10cm)

PKLCS1212E2400-R1

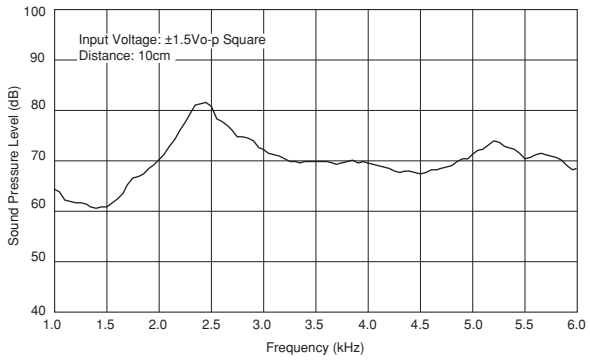

PKLCS1212E4001-R1

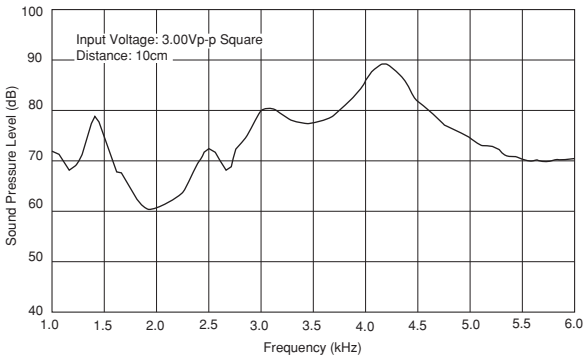

■ Taping Dimension

Dimensions of Carrier Tape

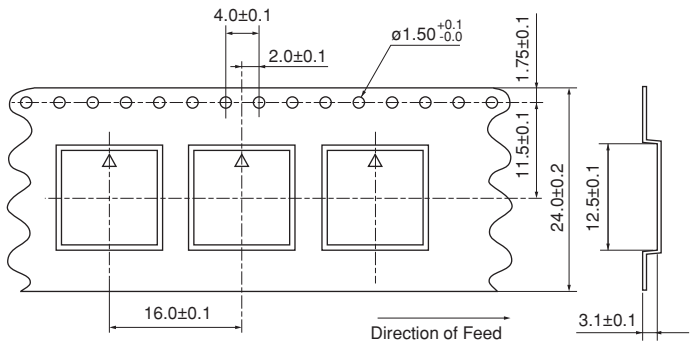

Cover film peel strength force: 0.1–0.7N
Cover film peel speed: 300mm/min.

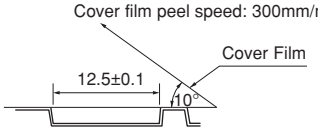

Dimensions of Reel

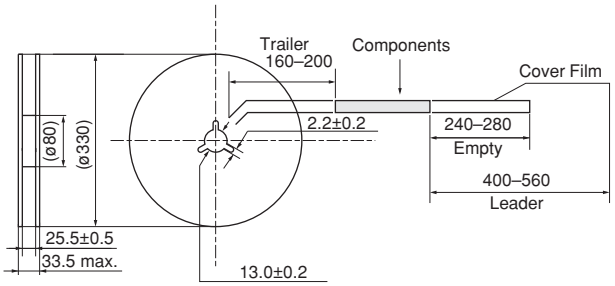

(in mm)

5

Piezoelectric Sounders (External Drive SMD Type) Circuit/Notice

■ Circuit

The following are examples of externally driven circuits.
(1) Unstable multi-vibrator using Tr.
(2) Circuits using inverters or NAND gates.

(1)

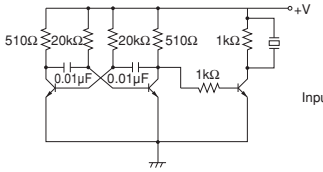

(2)

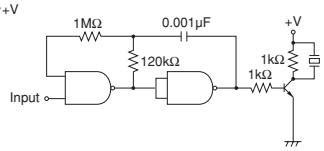

■ Notice (Soldering and Mounting)

Washing of the component is prohibited because it is not sealed.

■ Notice (Handling)

1. The component may be damaged if mechanical stress exceeding specifications is applied.
2. Take care to protect the operating circuit from surge voltage resulting from excessive force, falling, shock or temperature change.
3. If DC voltage is applied to the component, silver migration may occur. Please strictly avoid subjecting the component to DC voltage for long periods.
4. The resistor should be used as shown in Fig. A.
   A suitable resistance value should be chosen, preferably 1kΩ to 2kΩ. Instead of this measure, a diode may also be applied as shown in Fig. B.

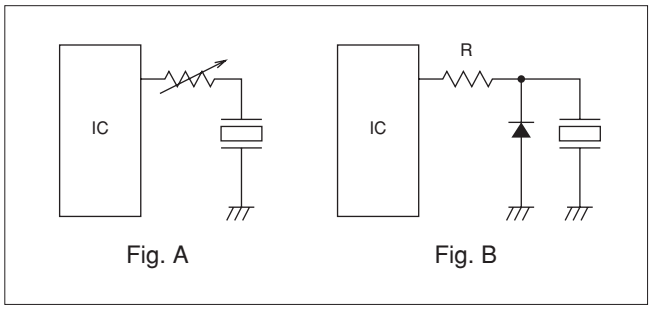

Fig. A Fig. B

5. Avoid excessive pulling of the lead wire because the wire may break or the soldering point come off.

Piezoelectric Sound Components

Piezoelectric Ringers (PIEZORINGER®)

As the result of rapid development of ICs in telephones, demand for piezoelectric sounders as telephone ringers has also rapidly increased. To effectively satisfy this rising demand, Murata provides a suitable piezoelectric sounder called "PIEZORINGER" with the following features.

■ Features

1. Extremely clear sound
2. Since it is voltage driven, the power consumption is negligible.
3. It can be driven directly from ICs.
4. Thin and lightweight



PKM33EPH1201C

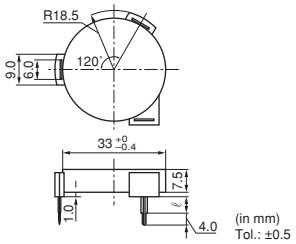

Part Number	ℓ
PKM33EPH1201C	5.0
PKM33EPH1202C	0



PKM34EWH1101C/1201C

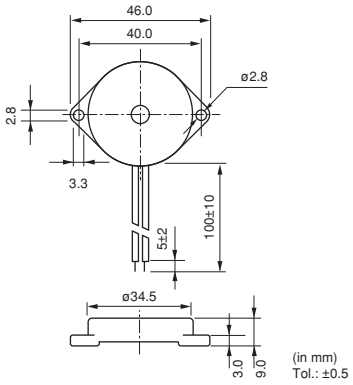



PKM44EWH1001C

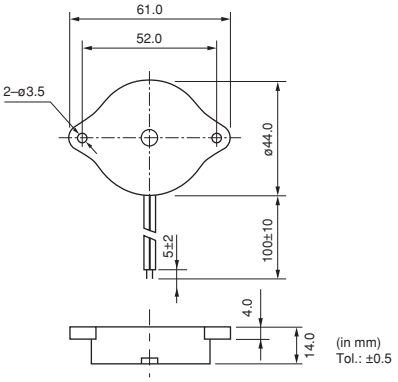

6

Pin Type

Part Number	Sound Pressure Level (dB)	Sound Pressure Level (Ref. only) (dB)	Operating Voltage Range	Capacitance (nF)	Operating Temp. Range (°C)	Storage Temp. Range (°C)
PKM33EPH1201C	68 min. [30Vp-p,1.2kHz,square wave,1m]	65 min. [1Vrms,1.2kHz,sine wave,10cm]	40.0Vp-p max.	40.0 ±30% [120Hz]	-20 to +70	-30 to +80

Lead Wire Type

Part Number	Sound Pressure Level (dB)	Sound Pressure Level (Ref. only) (dB)	Operating Voltage Range	Capacitance (nF)	Operating Temp. Range (°C)	Storage Temp. Range (°C)
PKM34EWH1101C	70 min. [30Vp-p,1.1kHz,square wave,1m]	60 min. [1Vrms,1.1kHz,sine wave,10cm]	40.0Vp-p max.	40.0 ±30% [120Hz]	-20 to +70	-30 to +80
PKM34EWH1201C	70 min. [30Vp-p,1.2kHz,square wave,1m]	60 min. [1Vrms,1.2kHz,sine wave,10cm]	60.0Vp-p max.	32.0 ±30% [120Hz]	-20 to +70	-30 to +80
PKM44EWH1001C	75 min. [30Vp-p,1kHz,square wave,1m]	70 min. [1Vrms,1kHz,sine wave,10cm]	30.0Vp-p max.	68.0 ±30% [120Hz]	-20 to +70	-30 to +80

■ Freq. Response (Square Wave 30Vp-p, 1m)

PKM33EPH1201C

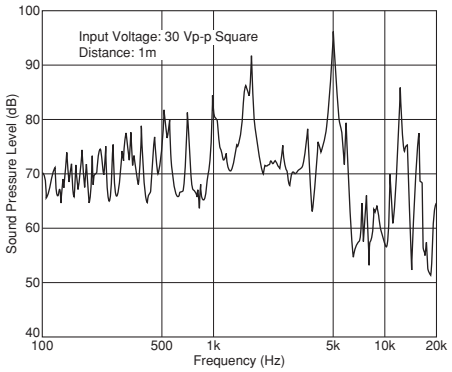

PKM34EWH1101C

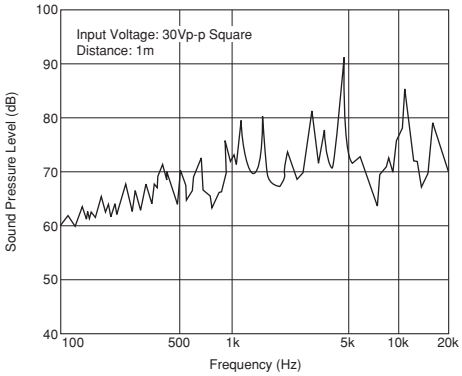

PKM34EWH1201C

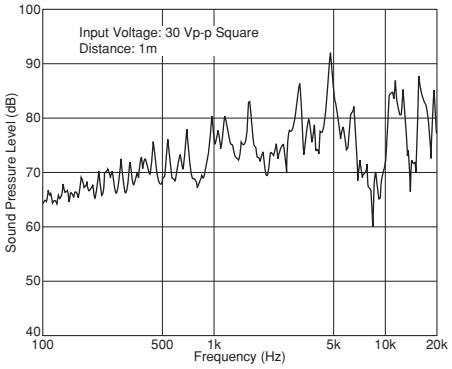

PKM44EWH1001C

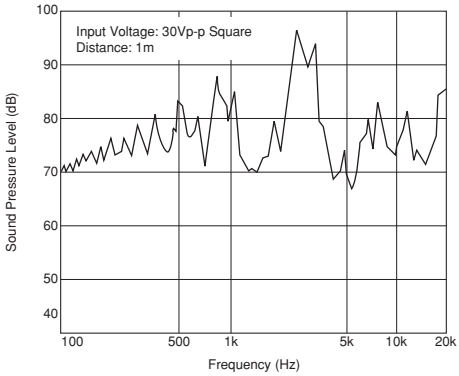

■ Freq. Response (Sine Wave 1Vrms, 10cm)

PKM33EPH1201C

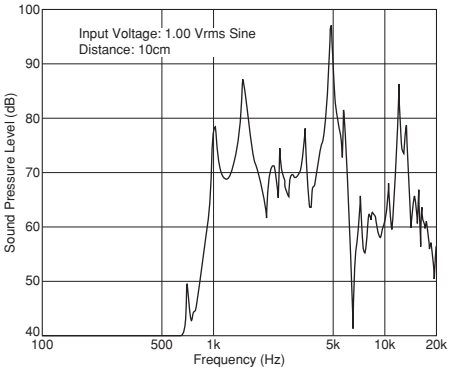

PKM34EWH1101C

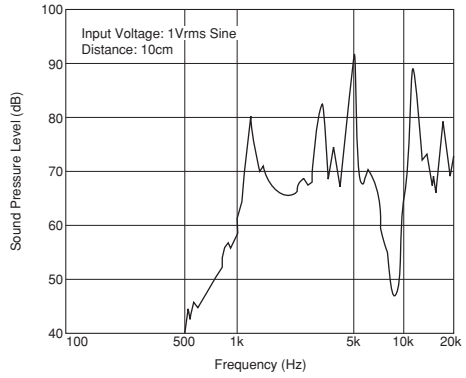

PKM34EWH1201C

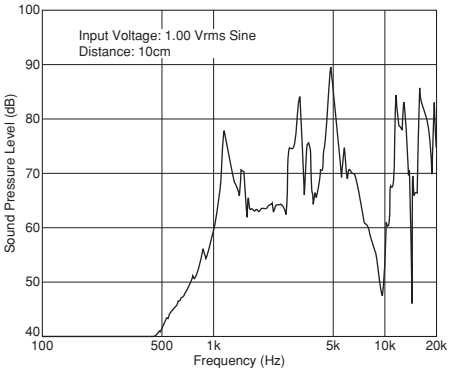

PKM44EWH1001C

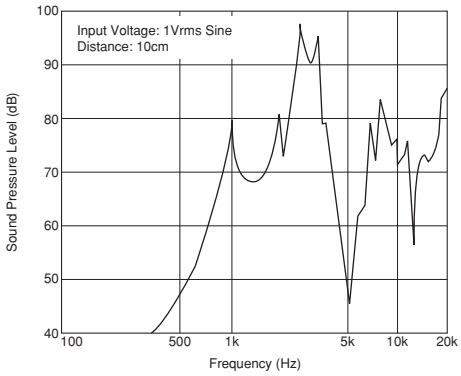

Continued on the following page.

Piezoelectric Ringers (PIEZORINGER®) Notice

■ Notice (Soldering and Mounting)

1. Notice (Soldering and Mounting)
   (1) Soldering Iron
      (a) Immerse lead terminals up to 1.5mm from component's body in soldering bath of +260±5°C for 10±1.0 seconds, and then leave components in natural conditions for 4 hours.
      (b) Directly contact the lead terminal with the tip of the soldering iron for +350±5°C for 3.0±0.5 seconds, and then leave components in natural conditions for 4 hours.
   (2) Reflow
      The component cannot withstand reflow soldering.
2. Washing of the component is prohibited because it is not sealed.

■ Notice (Handling)

1. The component may be damaged if mechanical stress exceeding specifications is applied.
2. Take care to protect the operating circuit from surge voltage resulting from excessive force, falling, shock or temperature change.
3. If DC voltage is applied to the component, silver migration may occur. Please strictly avoid subjecting the component to DC voltage for long periods.
4. The resistor should be used as shown in Fig. A. A suitable resistance value should be chosen, preferably 1kΩ to 2kΩ. Instead of this measure, a diode may also be applied as shown in Fig. B.

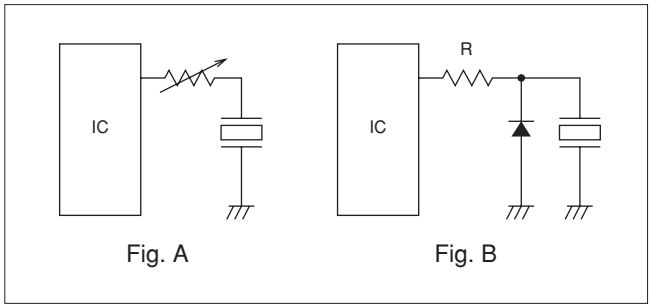

Fig. A Fig. B

5. Avoid excessive pulling of the lead wire because the wire may break or the soldering point come off.

Piezoelectric Sound Components

Piezoelectric Sounders Self Drive Pin Type

Piezoelectric sounder self drive type requires only a simple circuit and DC power supply. Since this type uses a resonant system, it is also available for alarms that need large sound volume.

■ Applications

1. Gas alarms, burglar alarms, smoke detectors
2. Air conditioners, microwave ovens, washing machines and other home-electronic appliances controlled by microcomputers
3. Toys, game machines



PKM24SPH3805

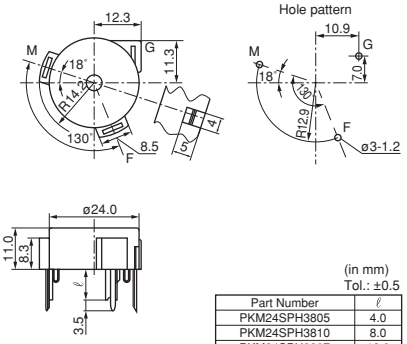

(in mm)
Tol.: ±0.5

Part Number	ℓ
PKM24SPH3805	4.0
PKM24SPH3810	8.0
PKM24SPH3807	12.0
PKM24SPH3801	14.0

Part Number	Sound Pressure Level (dB)	Oscillating Frequency (kHz)	Current Consumption (mA)	Operating Voltage Range	Operating Temp. Range (°C)	Storage Temp. Range (°C)
PKM24SPH3805	90 min. [12Vdc,10cm]	3.8 ±0.4kHz [12Vdc]	12 max. [12Vdc]	3.0 to 20.0Vdc	-20 to +70	-30 to +80

■ Standard Circuit Examples

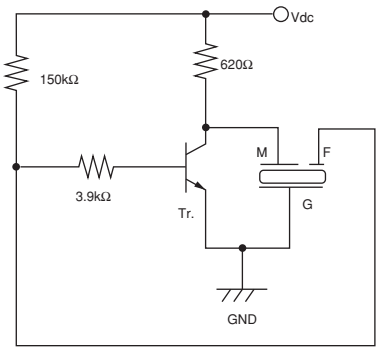

Tr: 2SC1815Y or equivalent

7

Piezoelectric Sounders (Self Drive) Notice

■ Notice (Soldering and Mounting)

1. Notice (Soldering and Mounting)
   (1) Soldering Iron
      (a) Immerse lead terminals up to 1.5mm from component's body in soldering bath of +260±5°C for 10±1.0 seconds, and then leave components in natural conditions for 4 hours.
      (b) Directly contact the lead terminal with the tip of the soldering iron for +350±5°C for 3.0±0.5 seconds, and then leave components in natural conditions for 4 hours.
   (2) Reflow
      The component cannot withstand reflow soldering.
2. Washing of the component is prohibited because it is not sealed.
3. Please do not cover the hole with tape or any other obstacle as this will produce irregular oscillation.
4. Do not place any obstacle within 15mm of the top of the component as this will produce irregular oscillation.

■ Notice (Handling)

1. The component may be damaged if mechanical stress exceeding specifications is applied.
2. Take care to protect the operating circuit from surge voltage resulting from excessive force, falling, shock or temperature change.
3. If DC voltage is applied to the component, silver migration may occur. Please strictly avoid subjecting the component to DC voltage for long periods.
4. The standard self-driven circuits utilizes transistor switching. Since the circuit constants for hfe of the transistor are optimally chosen to maintain stable oscillation, please design a circuit following the standard.

Piezoelectric Sound Components

Piezoelectric Buzzers Pin Type

This is a unified piezoelectric sounder that has a piezoelectric diaphragm of 3 terminals connected to a self drive circuit, and it easily generates sound with only a DC power supply (DC3.0-15V). Using a suitably designed resonant system, this type can be used where large sound volumes are needed.



PKB24SPCH3601-B0

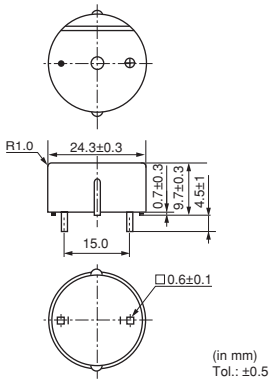

■ Applications

1. Gas alarms, burglar alarms
2. Air conditioners, microwave ovens and various types of microcomputer controlled home-electronic appliances
3. Toys, games, and other simple electronic devices such as teaching aids

Part Number	Sound Pressure Level (dB)	Oscillating Frequency (kHz)	Current Consumption (mA)	Operating Voltage Range	Operating Temp. Range (°C)	Storage Temp. Range (°C)
PKB24SPCH3601-B0	90 min. [12Vdc,10cm]	3.6 ±0.5kHz [12Vdc]	16 max. [12Vdc]	3.0 to 15.0Vdc	-20 to +70	-30 to +80

■ Voltage-Sound Pressure Level/Voltage-Consumption Current

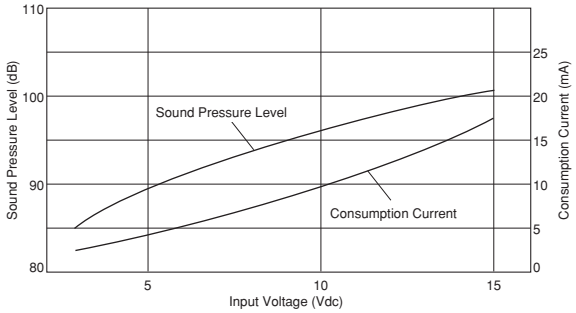

8

Piezoelectric Buzzers Notice

■ Notice (Soldering and Mounting)

1. Notice (Soldering and Mounting)
   (1) Soldering Iron
      (a) Immerse lead terminals up to 1.5mm from component's body in soldering bath of +260±5°C for 10±1.0 seconds, and then leave components in natural conditions for 4 hours.
      (b) Directly contact the lead terminal with the tip of the soldering iron for +350±5°C for 3.0±0.5 seconds, and then leave components in natural conditions for 4 hours.
   (2) Reflow
      The component cannot withstand reflow soldering.
2. Washing of the component is prohibited because it is not sealed.
3. Please do not cover the hole with tape or any other obstacle as this will produce irregular oscillation.
4. Do not place any obstacle within 15mm of the top of the component as this will produce irregular oscillation.

■ Notice (Handling)

1. The component may be damaged if mechanical stress over this specification is applied.
2. Resistors should not be connected in series to the power supply as this will produce irregular oscillation. When a resistor is necessary to control sound volume, use a capacitor (1µF) in parallel with the buzzer together.

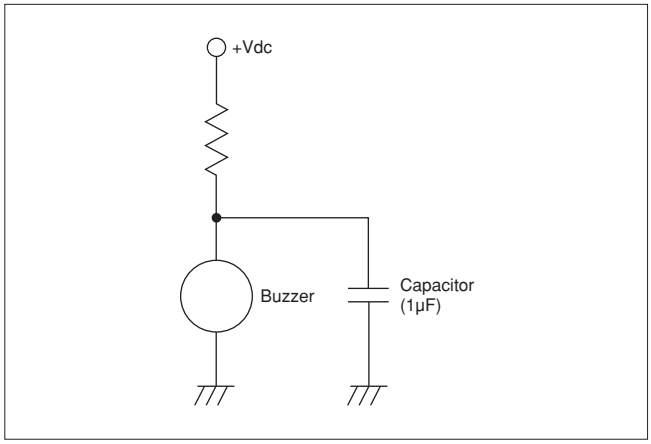

3. Avoid excessive pulling of the lead wire because the wire may break or the soldering point come off.

Piezoelectric Sound Components Notice

■ Notice (Storage and Operating Condition)

1. Product Storage Condition
   Please store the products in a room where the temperature/humidity is stable and avoid places where there are large temperature changes.
   Please store the products under the following conditions:
   Temperature: -10 to + 40°C
   Humidity: 15 to 85% R.H.
2. Expiration Date on Storage
   Expiration date (shelf life) of the products is six months after delivery under the conditions of a sealed and unopened package. Please use the products within six months after delivery. If you store the products for a long time (more than six months), use carefully because the products may be degraded in solderability due to storage under poor conditions.
   Please confirm solderability and characteristics for the products regularly.
3. Notice on Product Storage
   (1) Please do not store the products in a chemical atmosphere (Acids, Alkali, Bases, Organic gas, Sulfides and so on), because the characteristics may be reduced in quality, may be degraded in solderability due to storage in a chemical atmosphere.
   (2) Please do not put the products directly on the floor without anything under them to avoid damp places and/or dusty places.
   (3) Please do not store the products in places such as: in a damp heated place or any place exposed to direct sunlight or excessive vibration.
   (4) Please use the products immediately after the package is opened, because the characteristics may be reduced in quality, and/or be degraded in the solderability due to storage under poor conditions.
   (5) Please do not drop the products to avoid cracking of the ceramic element.
4. Other
   Please be sure to consult with our sales representative or engineer whenever the products are to be used in conditions not listed above.

Package

■ Minimum Quantity (pcs.)

Product Names	Part Number	Minimum Quantity		
		Ø330mm Reel	Bulk (Box)	Ammo Pack
● Piezoelectric Diaphragms*				
External Drive Types	**7BB-12-9**		5120	
	7BB-15-6		8000	
	7BB-20-3		3000	
	7BB-20-6		1800	
	7BB-20-6L0		600	
	7BB-27-4		1500	
	7BB-27-4L0		600	
	7BB-35-3		800	
	7BB-35-3L0		400	
	7BB-41-2		400	
	7BB-41-2L0		250	
	7NB-31R2-1		3000	
Self Drive Types	**7BB-20-6C**		1800	
	7BB-20-6CL0		600	
	7BB-27-4C		1500	
	7BB-27-4CL0		600	
	7BB-35-3C		800	
	7BB-35-3CL0		400	
	7BB-41-2C		600	
	7BB-41-2CL0		250	
	7SB-34R7-3C		800	
● Piezoelectric Sounders*				
External Drive Types	**PKLCS1212E2400-R1**	1000		
	PKLCS1212E24A0-R1	1000		
	PKLCS1212E4001-R1	1000		
	PKLCS1212E40A1-R1	1000		
	PKM13EPYH4000-A0			500
	PKM13EPYH4002-B0		330	
	PKM17EPP-2002-B0		200	
	PKM17EPPH4001-B0		200	
	PKM17EPPH4002-B0		200	
	PKM17EWH2001		250	
	PKM17EWH4000		500	
	PKM22EPH2001		360	
	PKM22EPH2002		270	
	PKM22EPH2003		270	
	PKM22EPPH2001-B0		750	
	PKM22EPPH2002-B0		750	
	PKM22EPPH4001-B0		900	
	PKM22EPPH4002-B0		900	
	PKM22EPPH4005-B0		750	
	PKM22EPPH4007-B0		750	
	PKM22EPPH4012-B0		750	
	PKM22EPTH2001-B0		300	

Continued on the following page.

"Minimum Quantity" means the number of units of each delivery or order. The quantity should be an integral multiple of the "Minimum Quantity." (As for products series with ∗mark, bulk (bag) quantities shown here differ from actual delivery quantities in a package)
Please contact the nearest sales office for details and for any other products not listed above.

Package

Continued from the preceding page.

Product Names	Part Number	Minimum Quantity		
		Ø330mm Reel	Bulk (Box)	Ammo Pack
Self Drive Types	**PKM24SPH3801**		270	
	PKM24SPH3805		360	
	PKM24SPH3807		270	
	PKM24SPH3810		270	
● Piezoelectric Buzzers*	**PKB24SPCH3601-B0**		650	
● Piezoelectric Ringers (PIEZORINGER®)*	**PKM33EPH1201C**		300	
	PKM33EPH1202C		60	
	PKM34EWH1101C		25	
	PKM34EWH1201C		25	
	PKM44EWH1001C		25	

⚠Note:

1. Export Control
   <For customers outside Japan>
   No Murata products should be used or sold, through any channels, for use in the design, development, production, utilization, maintenance or operation of, or otherwise contribution to (1) any weapons (Weapons of Mass Destruction [nuclear, chemical or biological weapons or missiles] or conventional weapons) or (2) goods or systems specially designed or intended for military end-use or utilization by military end-users.
   <For customers in Japan>
   For products which are controlled items subject to the “Foreign Exchange and Foreign Trade Law” of Japan, the export license specified by the law is required for export.
2. Please contact our sales representatives or product engineers before using the products in this catalog for the applications listed below, which require especially high reliability for the prevention of defects which might directly damage a third party's life, body or property, or when one of our products is intended for use in applications other than those specified in this catalog.
   ① Aircraft equipment ② Aerospace equipment
   ③ Undersea equipment ④ Power plant equipment
   ⑤ Medical equipment ⑥ Transportation equipment (vehicles, trains, ships, etc.)
   ⑦ Traffic signal equipment ⑧ Disaster prevention / crime prevention equipment
   ⑨ Data-processing equipment ⑩ Application of similar complexity and/or reliability requirements to the applications listed above
3. Product specifications in this catalog are as of November 2011. They are subject to change or our products in it may be discontinued without advance notice.
   Please check with our sales representatives or product engineers before ordering. If there are any questions, please contact our sales representatives or product engineers.
4. Please read rating and ⚠CAUTION (for storage, operating, rating, soldering, mounting and handling) in this catalog to prevent smoking and/or burning, etc.
5. This catalog has only typical specifications because there is no space for detailed specifications. Therefore, please review our product specifications or consult the approval sheet for product specifications before ordering.
6. Please note that unless otherwise specified, we shall assume no responsibility whatsoever for any conflict or dispute that may occur in connection with the effect of our and/or a third party's intellectual property rights and other related rights in consideration of your use of our products and/or information described or contained in our catalogs. In this connection, no representation shall be made to the effect that any third parties are authorized to use the rights mentioned above under licenses without our consent.
7. No ozone depleting substances (ODS) under the Montreal Protocol are used in our manufacturing process.

Murata Manufacturing Co., Ltd.

http://www.murata.com/

Head Office
1-10-1, Higashi Kotari, Nagaokakyo-shi, Kyoto 617-8555, Japan
Phone: 81-75-951-9111

International Division
3-29-12, Shibuya, Shibuya-ku, Tokyo 150-0002, Japan
Phone: 81-3-5469-6123 Fax: 81-3-5469-6155 E-mail: intl@murata.co.jp