P37E.pdf
Feb. 1,2022

muRata
INNOVATOR IN ELECTRONICS

Piezoelectric Sound Components



EU RoHS Compliant

- All the products in this catalog comply with EU RoHS.
- EU RoHS is "the European Directive 2011/65/EU on the Restriction of the Use of Certain Hazardous Substances in Electrical and Electronic Equipment."
- For more details, please refer to our web page, "Murata's Approach for EU RoHS" (https://www.murata.com/en-eu/support/compliance/rohs).

Contents

Product specifications are as of February 2022.

Part Numbering ····· p2

1 Piezoelectric Sounders
SMD Type Product Lineup ····· p4
Pin Type Product Lineup ····· p8
Pin Type Taping Product Lineup ····· p10
Drive Method ····· p12
⚠Caution · Notice ····· p13

2 Piezoelectric Buzzers
Product Lineup ····· p15
⚠Caution · Notice ····· p16

3 Piezoelectric Diaphragms
Product Lineup ····· p18
Design Procedures · Drive Method ····· p19
⚠Caution · Notice ····· p20

Oscillating System ····· p22
To Raise Sound Pressure Level (S.P.L.) ····· p23
Measuring Method ····· p24
Minimum Quantity ····· p25

Please check the MURATA website (**https://www.murata.com/**)
if you cannot find a part number in this catalog.

Part Numbering

SMD Piezoelectric Sounder

(Part Number) PK ❶ | LCS ❷ | 1212 ❸ | E ❹ | 40 ❺ | ** ❻ | -R1 ❼

❶Product ID

Product ID	
PK	Piezoelectric Sound Components

❷Product

Code	Product
LCS/MCS	SMD Sounder

❸Dimensions

Code	Outer Dimensions
1818	□18mm
1212	□12mm
0909	□9mm

❹Drive

Code	Drive
E	External Drive

❺Oscillating Frequency Type

Expressed resonant frequency by two-digit alphanumerics. The unit is in 100 hertz (Hz.) 4kHz (4000Hz) is denoted as "**40**."

❻Individual Specification Code

Code	Individual Specification Code
**	Two digits express specific specification in characteristics.

❼Packaging

Code	Packaging
-R1	Plastic Taping

Pin Type Piezoelectric Sounders/Piezoelectric Buzzers

(Part Number) PK ❶ | M ❷ | 17 ❸ | E ❹ | P ❺ | P- ❻ | 20 ❼ | ** ❽ | P ❾ | -A0 ❿

❶Product ID

Product ID	
PK	Piezoelectric Sound Components

❷Product

Code	Product
M	Sounder
B	Buzzer

❸Outer Dimensions

Ex.)

Code	Outer Dimensions
17	ø17.0mm

❹Drive

Code	Drive
E	External-Drive
S	Self-Drive

❺Outer Electrode Style

Code	Outer Electrode Style
P	Pin Type

❻Structure

Code	Structure
P□	Flat Type Auto-assemble
Y□	Flat Type/Available for Taping
C□	Flat Type/Semi-auto-assemble
□	Exclude above mentioned

□ signifies specification of the outer electrode.

❼Oscillating Frequency Type

Expressed resonant frequency by two-digit alphanumerics. The unit is in 100 hertz (Hz). In case of 2kHz (2000Hz), expressed as "**20**."

❽Individual Specification Code

Code	Individual Specification Code
**	Two digits express custom specification in characteristics.

❾Special Quality Guarantee

Code	Special Quality Guarantee
P	Post Plated Terminal
—	Not Post Plated Terminal (Blank)

❿Packaging

Code	Packaging
-B0	Bulk
-A0	Radial Taping

Radial taping is not available for all types.
Please contact us.

Pin Type Piezoelectric Sounders (PKHPS Series)

(Part Number) **PK** **HPS** **0013** **E** **40** ****** **-A2**
❶ ❷ ❸ ❹ ❺ ❻ ❼

❶Product ID

Product ID	
PK	Piezoelectric Sound Components

❷Product

Code	Product
HPS	Pin Type Sounder

❸Dimensions

Code	Outer Dimensions
0013	ø12.6mm

❹Drive

Code	Drive
E	External Drive

❺Oscillating Frequency Type

Expressed resonant frequency by two-digit alphanumerics. The unit is in 100 hertz (Hz.) 4kHz (4000Hz) is denoted as "**40**."

❻Individual Specification Code

Code	Individual Specification Code
**	Two digits express specific specification in characteristics.

❼Packaging

Code	Packaging
-A2	Radial Taping

Piezoelectric Diaphragms

(Part Number) **7** **N** **B** **-****** **-1R5** **L** **10**
❶ ❷ ❸ ❹ ❺ ❻ ❼

❶Product ID

Product ID	
7	Ceramic Material

❷Metal Plate Material

Code	Metal Plate Material
B	Brass
N	Nickel Alloy

❸Product

Code	Product
B	Piezoelectric Diaphragms

❹Metal Plate Diameter

Code	Metal Plate Diameter
-****	A hyphen (**-**) plus from two to four-digit alphanumerics express metal plate outer dimensions. A decimal point is expressed by the capital letter "**R**."

❺Resonant Frequency Type

A hyphen (**-**) and three-digit alphanumerics express resonant frequency. A decimal point is expressed by the capital letter "**R**." If there is no decimal point, the decimal point code is omitted.

❻Product Specification

Code	Product Specification
L	With lead (available for RoHS)
—	No lead (omitted)

❼Individual Specification Code

These digits express a lead length, lead number, and the presence/absence of a connector. If the product has no individual specification, the corresponding code is omitted.

Piezoelectric Sound Components

RoHS

Piezoelectric Sounders SMD Type

Taking advantage of extensive acoustic and mechanical design technology and high performance ceramics, Murata has developed SMD piezoelectric sounders that suit the thin, high-density design of electronic equipment.

Features

1. Small, thin and lightweight
2. High sound pressure level and clear sound
3. Reflowable
4. Tape & Reel supply

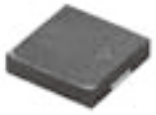

PKLCS1212E2000-R1
PKLCS1212E20A0-R1

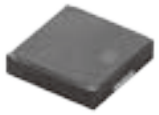

PKLCS1212E2400-R1
PKLCS1212E24A0-R1

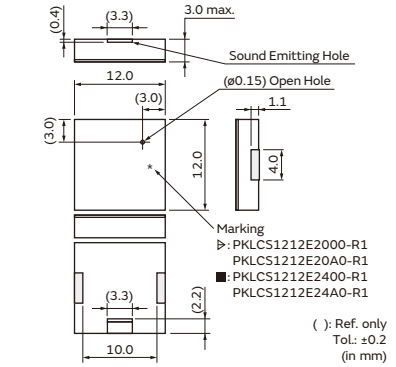

(Note) The location of open hole is not specified.



PKLCS1212E4001-R1
PKLCS1212E40A1-R1

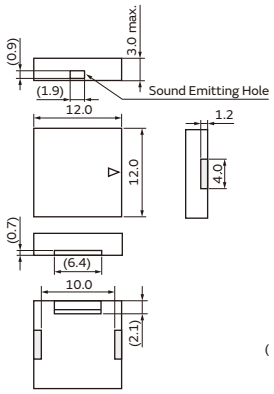



PKMCS0909E4000-R1

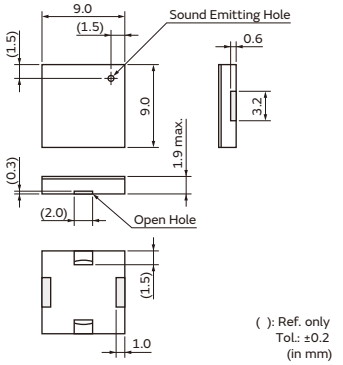

(Note) The location of sound emitting hole is not specified.



PKMCS1818E20A0-R1

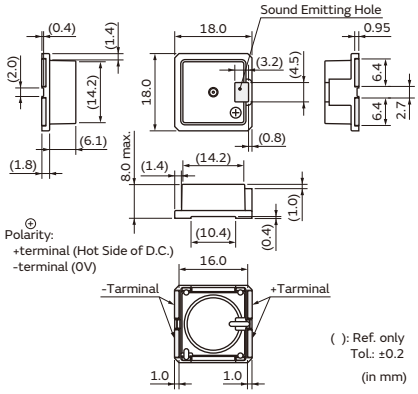



PKMCS0909E48H0-R1

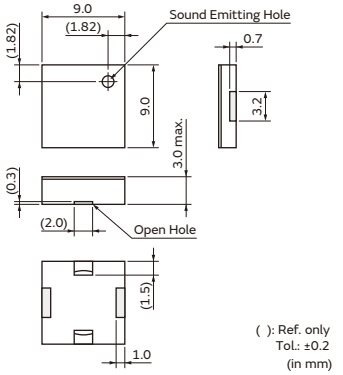

For Consumer

Part Number	Sound Pressure Level (typ.)	Operating Voltage Range* (Vo-p)	Capacitance (nF) Ref. only	Operating Temp. Range (°C)	Storage Temp. Range (°C)
PKLCS1212E2000-R1	76dB [±1.5Vo-p,2.0kHz,square wave,10cm]	±12.5 max.	(28.0)	-20 to +70	-30 to +80
PKLCS1212E2400-R1	80dB [±1.5Vo-p,2.4kHz,square wave,10cm]	±12.5 max.	(28.0)	-20 to +70	-30 to +80
PKLCS1212E4001-R1	84dB [±1.5Vo-p,4.0kHz,square wave,10cm]	±12.5 max.	(19.5)	-20 to +70	-30 to +80
PKMCS0909E4000-R1	72dB [±1.5Vo-p,4.0kHz,square wave,10cm]	±12.5 max.	(9.0)	-40 to +85	-40 to +85
PKMCS0909E48H0-R1	75dB [±2.5Vo-p,4.8kHz,square wave,10cm]	±12.5 max.	(9.0)	-40 to +85	-40 to +85

*Operating Voltage Range: Does not contain Direct Current bias.

For Automotive

Part Number	Sound Pressure Level (typ.)	Operating Voltage Range* (Vo-p)	Capacitance (nF) Ref. only	Operating Temp. Range (°C)	Storage Temp. Range (°C)
PKLCS1212E20A0-R1	76dB [±1.5Vo-p,2.0kHz,square wave,10cm]	±12.5 max.	(28.0)	-40 to +85	-40 to +85
PKLCS1212E24A0-R1	80dB [±1.5Vo-p,2.4kHz,square wave,10cm]	±12.5 max.	(28.0)	-40 to +85	-40 to +85
PKLCS1212E40A1-R1	84dB [±1.5Vo-p,4.0kHz,square wave,10cm]	±12.5 max.	(19.5)	-40 to +85	-40 to +85
PKMCS1818E20A0-R1	100dB [12Vo-p,2.0kHz,square wave,10cm]	18.0Vo-p [with polarity]	(33.0)	-40 to +105	-40 to +105

*Operating Voltage Range: Does not contain Direct Current bias.

Standard Land Pattern Dimensions

PKLCS1212E Series

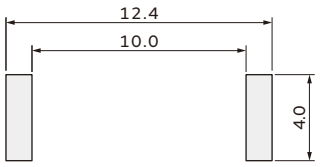

(in mm)

PKMCS0909E Series

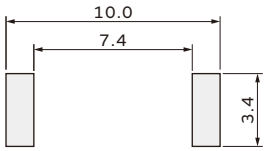

(in mm)

PKMCS1818E Series

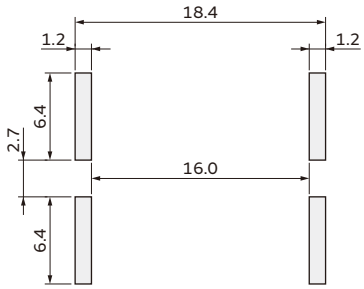

(in mm)

Frequency Response

PKLCS1212E2000-R1 / PKLCS1212E20A0-R1
Conditions: 10cm, A-filter

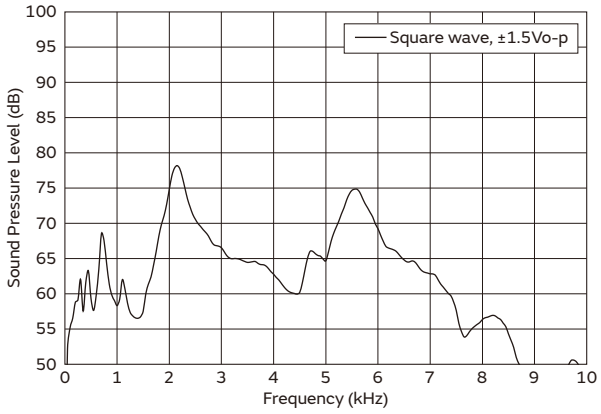

PKLCS1212E2400-R1 / PKLCS1212E24A0-R1
Conditions: 10cm, A-filter

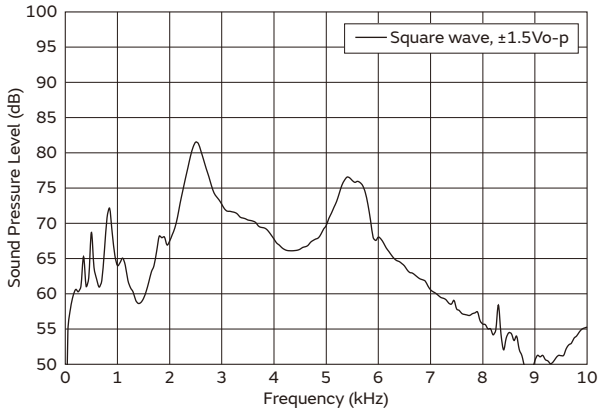

Continued on the following page.↗

Continued from the preceding page.↘

Frequency Response

PKLCS1212E4001-R1 / PKLCS1212E40A1-R1
Conditions: 10cm, A-filter

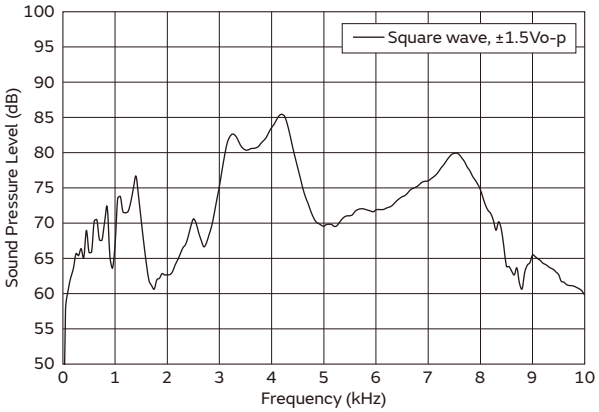

PKMCS0909E4000-R1
Conditions: 10cm, A-filter

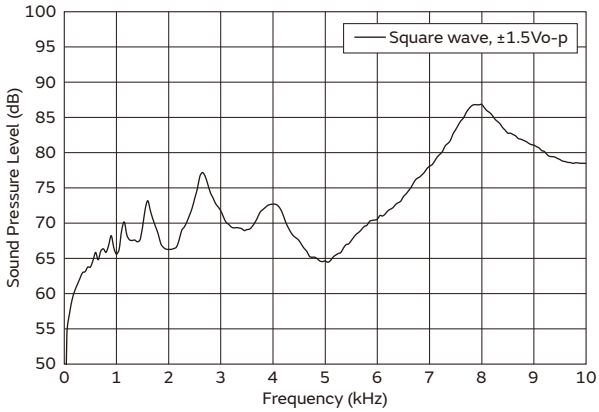

PKMCS1818E20A0-R1
Conditions: 10cm, A-filter

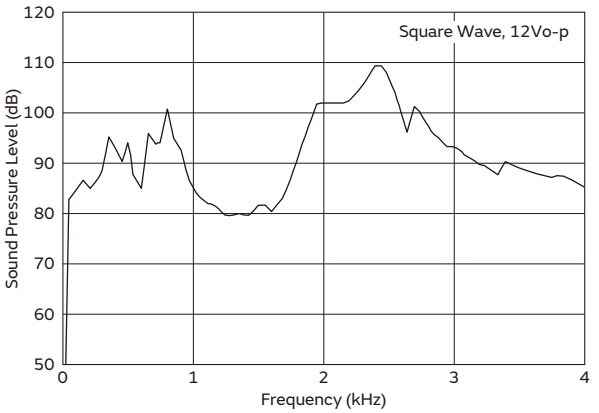

PKMCS0909E48H0-R1
Conditions: 10cm, A-filter

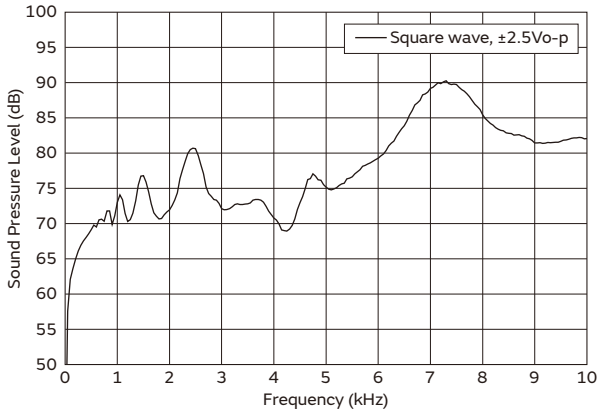

Taping Dimension PKLCS1212E Series

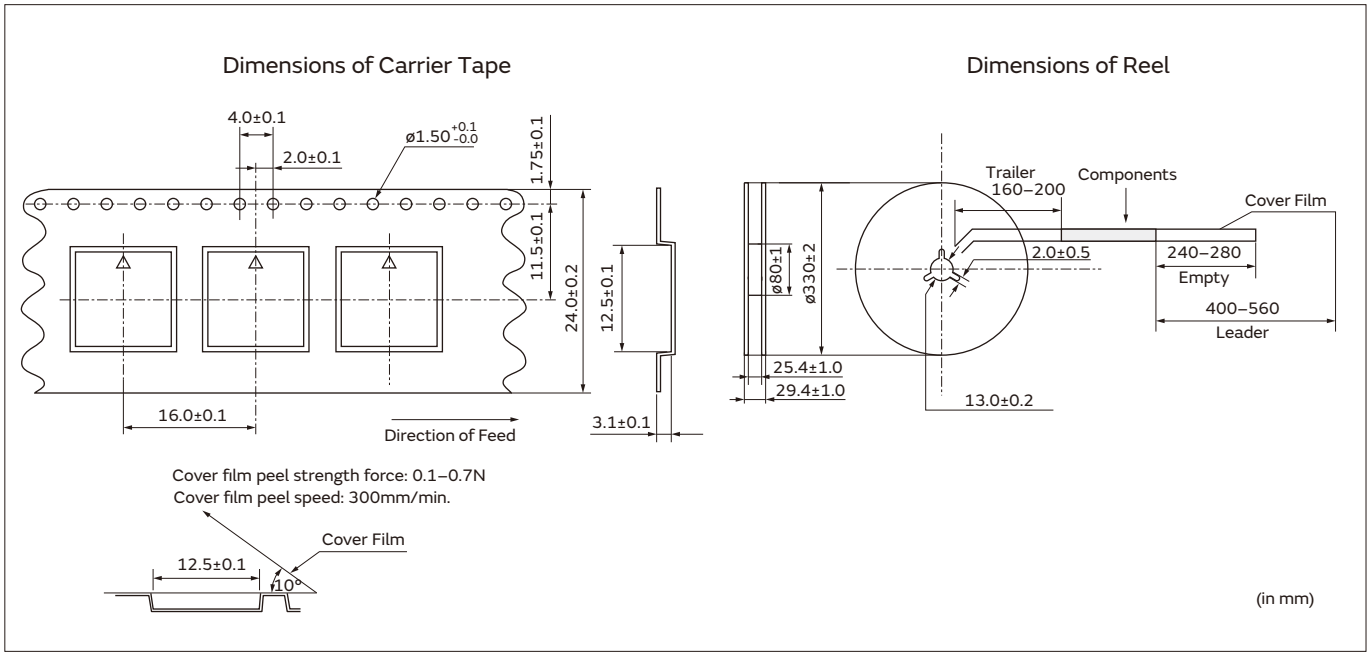

Taping Dimension PKMCS0909E40 Series

Dimensions of Plastic Tape

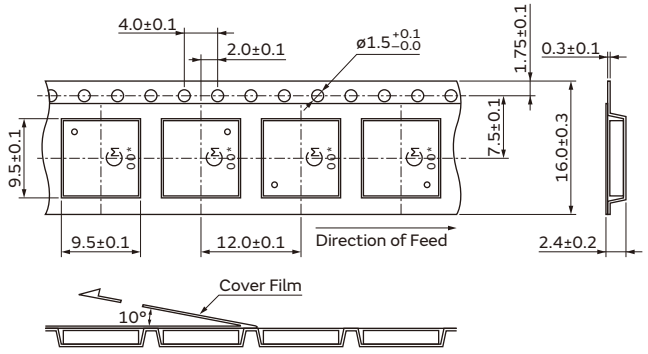

Dimensions of Plastic Reel

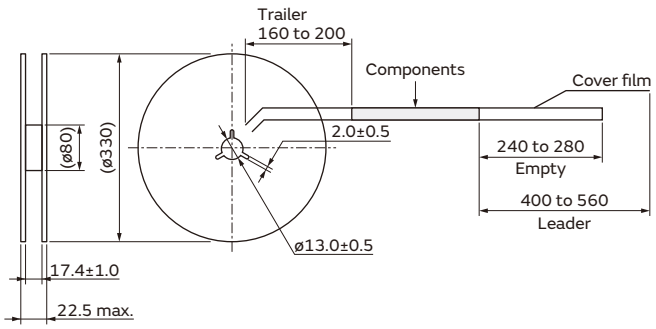

Cover film peel strength force 0.1 to 0.7N
Cover film peel speed 300mm/min.

(in mm)

Taping Dimension PKMCS0909E48H0 Series

Dimensions of Plastic Tape

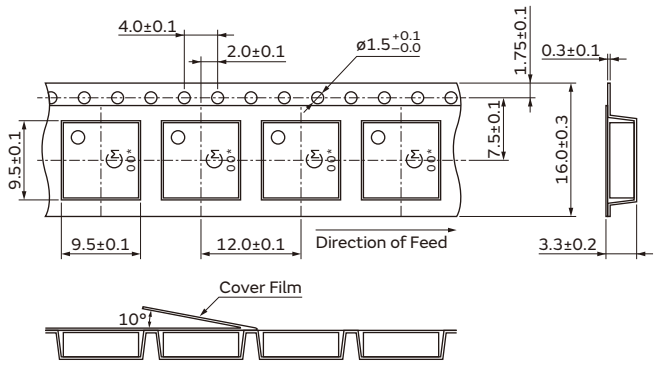

Dimensions of Plastic Reel

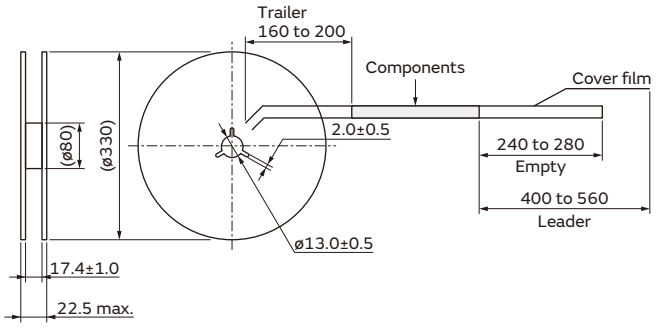

Cover film peel strength force 0.1 to 0.7N
Cover film peel speed 300mm/min.

(in mm)

Taping Dimension PKMCS1818E Series

Dimensions of Carrier Tape

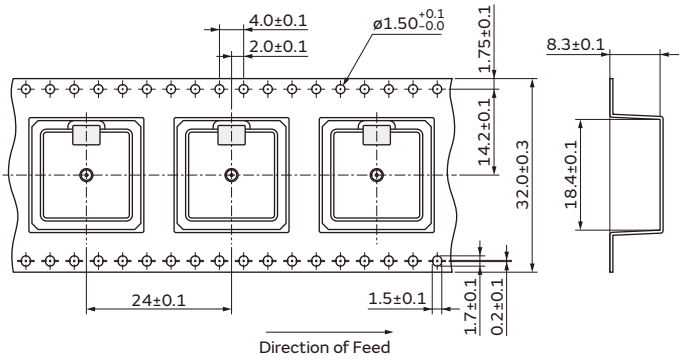

Dimensions of Reel

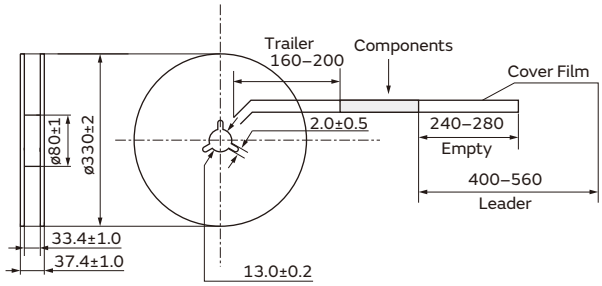

The cover film peel strength force: 0.1 to 0.7N
The cover film peel speed: 300mm/min.

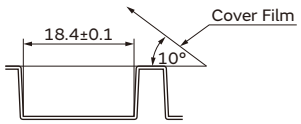

(in mm)

Piezoelectric Sound Components

RoHS

Piezoelectric Sounders Pin Type

Microcomputers are widely used for microwave ovens, air conditioners, cars, toys, timers, and alarm equipment. Externally driven piezoelectric sounders are used in digital watches, electronic calculators, telephones and other equipment. They are driven by a signal (ex.: 2048Hz or 4096Hz) from an LSI and provide melodious sound.

Features

1. Low power consumption
2. Noiseless and highly reliability

Applications

1. Various office equipment such as PPCs printers and keyboards
2. Home appliances such as microwave oven, rice cookers etc.
3. Confirmation sound of various audio equipment



PKM17EPP-2002-B0

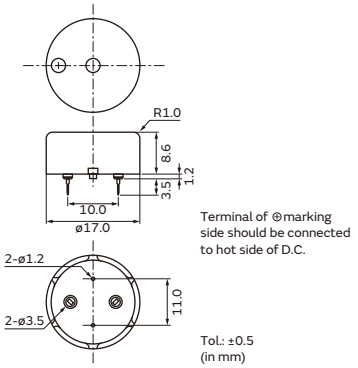



PKM22EPPH2001-B0

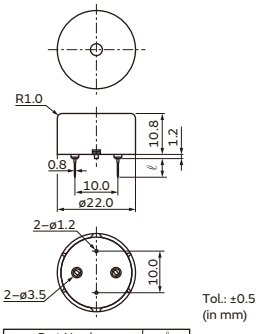

Part Number	ℓ
PKM22EPPH2001-B0	6.5
PKM22EPPH2002-B0	3.5



PKM22EPPH4001-B0

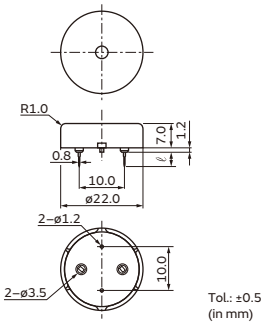

Part Number	ℓ
PKM22EPPH4001-B0	6.5
PKM22EPPH4002-B0	3.5



PKM22EPPH4005-B0

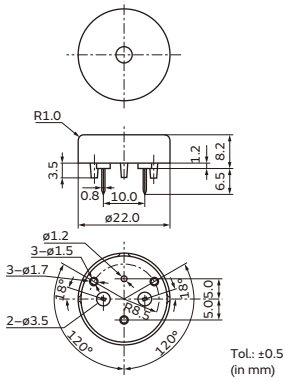



PKM22EPPH4007-B0

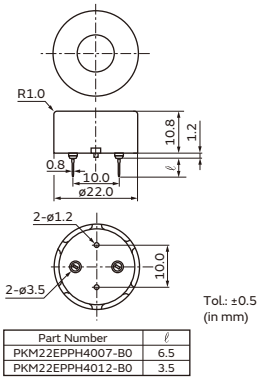

Part Number	ℓ
PKM22EPPH4007-B0	6.5
PKM22EPPH4012-B0	3.5

Part Number	Sound Pressure Level (typ.)	Operating Voltage Range* (Vo-p)	Capacitance (nF)	Operating Temp. Range (°C)	Storage Temp. Range (°C)
PKM17EPP-2002-B0	79dB [3.0Vo-p,2.0kHz, square wave,10cm]	25.0 max. [with polarity]	34.0 ±30%[120Hz]	-20 to +70	-30 to +80
PKM22EPPH2001-B0	79dB [±1.5Vo-p,2.0kHz,square wave,10cm]	±15.0 max.	19.0 ±30%[120Hz]	-20 to +70	-30 to +80
PKM22EPPH4001-B0	87dB [±1.5Vo-p,4.0kHz,square wave,10cm]	±15.0 max.	12.0 ±30%[1kHz]	-20 to +70	-30 to +80
PKM22EPPH4005-B0	86dB [±1.5Vo-p,4.0kHz,square wave,10cm]	±15.0 max.	12.0 ±30%[1kHz]	-20 to +70	-30 to +80
PKM22EPPH4007-B0	92dB [±1.5Vo-p,4.0kHz,square wave,10cm]	±15.0 max.	12.0 ±30%[1kHz]	-20 to +70	-30 to +80

*Operating Voltage Range: Does not contain Direct Current bias.

Frequency Response

PKM17EPP-2002-B0
Conditions: 10cm, A-filter

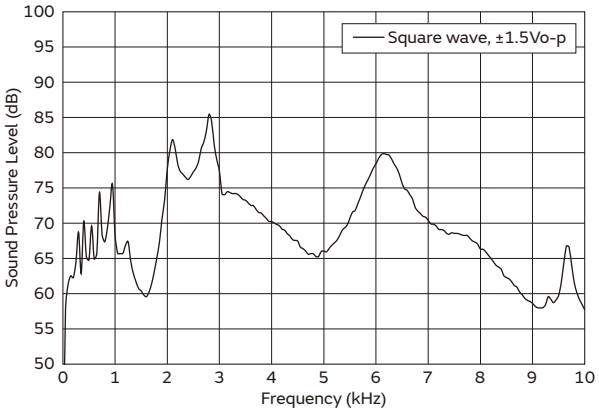

PKM22EPPH2001-B0
Conditions: 10cm, A-filter

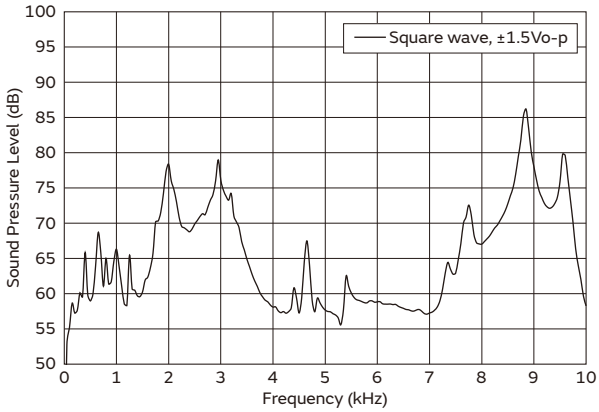

PKM22EPPH4001-B0
Conditions: 10cm, A-filter

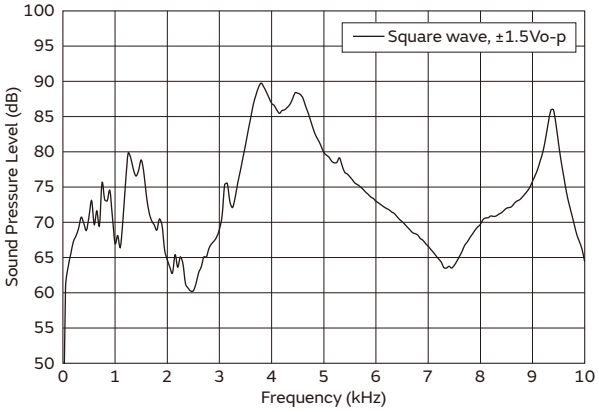

PKM22EPPH4005-B0
Conditions: 10cm, A-filter

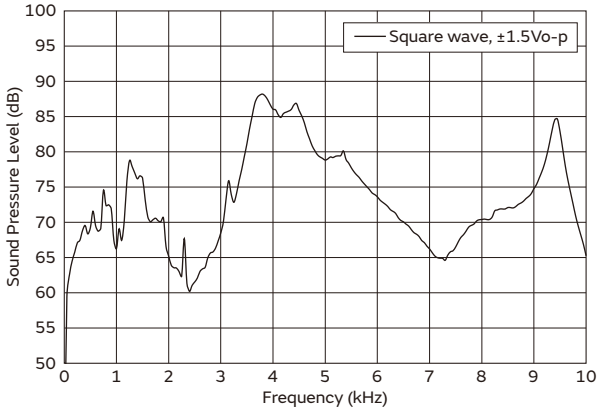

PKM22EPPH4007-B0
Conditions: 10cm, A-filter

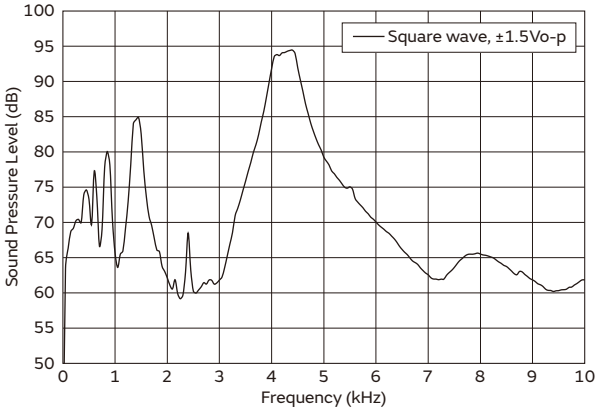

1

Piezoelectric Sound Components

RoHS

Piezoelectric Sounders Pin Type Taping

Taking advantage of extensive automatic insertion design technology and materials experience, Murata has developed standard taping type piezoelectric sounders.
This Murata technology supports labor and cost saving measures.



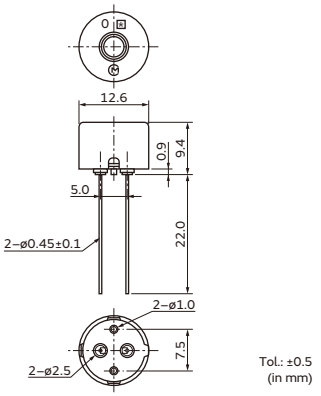

Features

1. Lead dimension: Improved mounting reliability (cut & clinch) due to round terminal
2. High, stable mountability
3. Radial Taping supply

Part Number	Sound Pressure Level (typ.)	Operating Voltage Range* (Vo-p)	Capacitance (nF)	Operating Temp. Range (°C)	Storage Temp. Range (°C)
PKHPS0013E4000-A2	83dB [±1.5Vo-p,4.0kHz,square wave,10cm]	±15.0max.	6.5 ±30%[1kHz]	-40 to +85	-40 to +85

*Operating Voltage Range: Does not contain Direct Current bias.

Frequency Response

PKHPS0013E4000-A2
Conditions: 10cm, A-filter

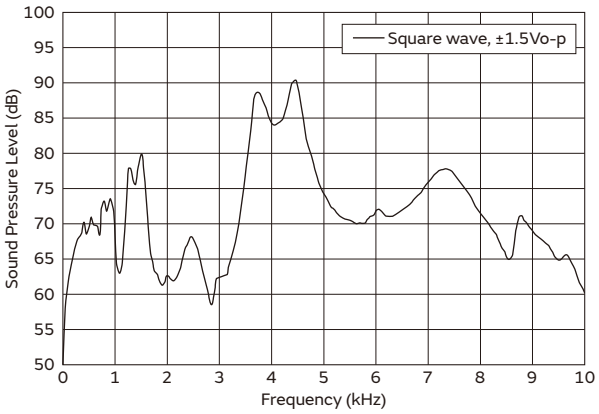

Taping Dimension

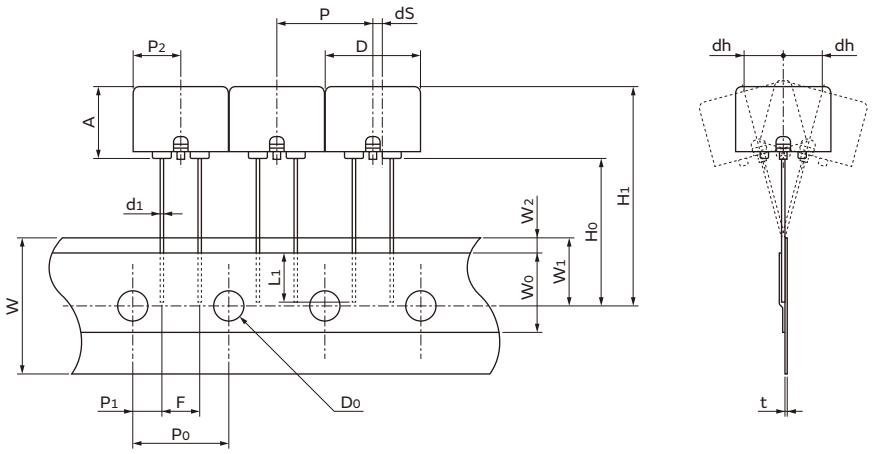

Item	Code	Nominal Value	Tol.	Notes
Width of diameter	D	ø12.6	±0.5	
Height of component	A	9.4	±0.5	
Dimensions of terminal	d_1	ø0.45	±0.1	
Lead length under the hold-down tape	L_1	6.5 min.	—	
Pitch of component	P	12.7	±1.0	
Pitch of sprocket	P_0	12.7	±0.2	Tolerance for Pitches 10xP_0=127±2mm
Length from hole center to lead	P_1	3.85	±0.7	
Length from hole center to component center	P_2	6.35	±0.7	
Lead spacing	F	5.0	±0.5	
Slant forward or backward	dh	0	±1.0	360°: 1mm max.
Width of carrier tape	W	18.0	±0.5	
Width of hold-down tape	W_0	12.5 min.	—	Hold-down tape does not exceed the carrier tape.
Position of sprocket hole	W_1	9.0	±0.5	
Gap of hold-down tape and carrier tape	W_2	2.0 max.	—	
Distance between the center of sprocket hole and lead stopper	H_0	19.5	±0.5	
Total height of component	H_1	30.0 max.	—	
Diameter of sprocket hole	D_0	ø4.0	±0.2	
Total thickness of tape	t	0.6	±0.2	
Body tilt	dS	0	±1.0	

(in mm)

Drive Method

Fig. 1 shows examples of the circuit to which the external drive method is applied.

(i) Represents a circuit driven by output signals of the unstable multivibrator.

(ii) Represents a circuit using 2 NAND gates, which is oscillated or stopped by ON/OFF operations of the input signals.

(iii) Represents a circuit driven by output signals of CMOS LSI.

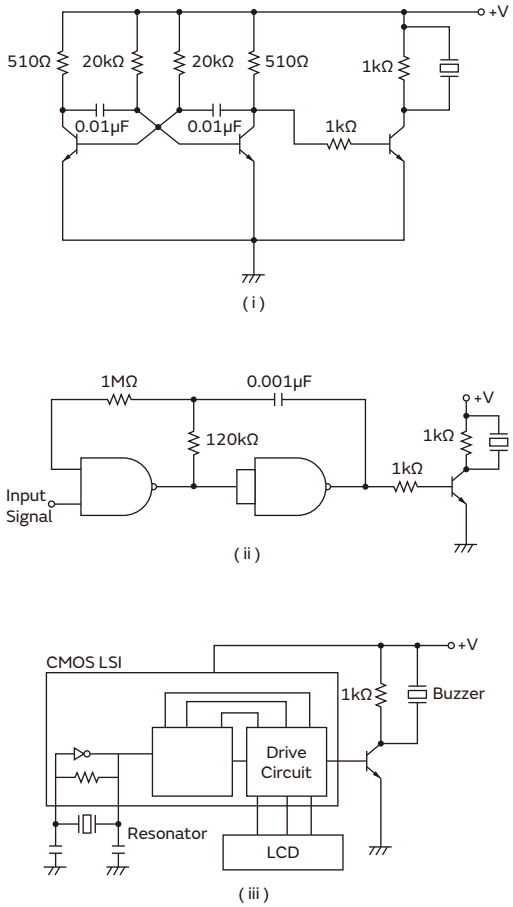

Fig. 1 Drive Circuit

⚠Caution · Notice

⚠Caution (Rating)

Do not use the product beyond the rated temperature range and the rated voltage range. If using it beyond this range, characteristics might degrade.

Notice (Storage and Operating Condition)

1. Product Storage Condition
   Please store the products in a room where the temperature/humidity is stable and avoid places where there are large temperature changes. Please store the products under the following conditions.
   Temperature: -10 to +40°C
   Humidity: 15 to 85%R.H.
2. Expiration Date on Storage
   Expiration date (shelf life) of the products is six months after delivery under the condition of a sealed and unopened package. Please use the products within six months after delivery. If you store the products for a long time (more than six months), use carefully because the products may be degraded in solderability due to storage under poor conditions.
   Please confirm solderability and characteristics for the products regularly.
3. Notice on Product Storage
   (1) Please do not store the products in a chemical atmosphere (Acids, Alkali, Bases, Organic gas, Sulfides and so on), because the characteristics may be reduced in quality, may be degraded in solderability due to storage in a chemical atmosphere.
   (2) Please do not store the products directly on the floor without anything under them to avoid damp places and/or dusty places.
   (3) Please do not store the product in places such as in a damp heated place or any place exposed to direct sunlight or excessive vibration.
   (4) Please use the products immediately after the package is opened, because the characteristics may be reduced in quality, and/or be degraded in solderability due to storage under poor conditions.
   (5) Please be sure to consult with our sales representative or engineer whenever the products are to be used in conditions not listed above.
4. Operating Environment
   This product is designed for application in an ordinary environment (normal room temperature, humidity and atmospheric pressure).
   Do not use the products in a chemical atmosphere such as chlorine gas, acid or sulfide gas.
   Characteristics might degrade by a chemical reaction with the material used in products.

Notice (Soldering and Mounting)

1. Mounting
   When mounting a pin terminal type of product to the printed circuit board, please insert the pin terminal along the hole of the board. If the product is pressed so that the terminal is not in the hole, the pin terminal would be pushed into the inside of the product and the sounds might become unstable.
2. Double-sided through-hole Board
   Please avoid using a double-sided through-hole board. If the melted solder touched the base of a pin terminal, a part of the plastic case would melt and the sounds might become unstable.
3. Soldering Conditions
   (1) Flow soldering conditions for pin terminal type
   · Temperature: within 260°C±5°C
   · Time: within 10±1 sec.
   · Soldering part is the lead terminals excluding 1.5mm from product body.
   (2) Soldering condition by soldering iron for pin terminal type
   · Temperature: within 350±5°C
   · Time: within 3.0±0.5 sec.
   · Soldering part is the lead terminals excluding 1.5mm from product body
   (3) Reflow soldering condition for surface mounting type
   · Temperature profile: Fig. 1
   · Number of times: Within 2 maximum

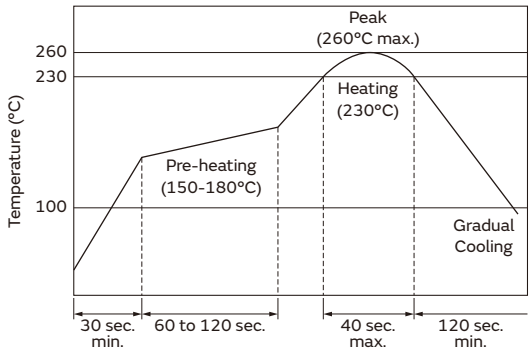

Fig. 1

Continued on the following page.↗

⚠Caution · Notice

Continued from the preceding page.↘

4. Washing
   Please avoid washing, since this product is not a sealed structure.
5. After Mounting the Product
   (1) If the product is floating from the printed circuit board, please do not push it. When pressing, the pin terminal is pushed inside the product and the sounds might become unstable.
   (2) Please do not apply force (shock) to the product. If force is applied, the case might come off.
   (3) If the case comes off, please do not reassemble. Even if it seems to have returned to the original, the sounds might become unstable.
   (4) Please do not blow air onto the product directly. Blown air applies force to the piezoelectric diaphragm through the sound emission hole; cracks could occur and then the sounds could become unstable. In addition, there is a possibility that the case could come off.
6. Flux or Coating Agent, etc., Various Solvents
   It is possible for a liquid solvent to penetrate inside the product, since this product is not a sealed structure. If a liquid penetrated inside and attached to the piezoelectric diaphragm, its vibration could be inhibited. If attaching to an electrical junction, the electric connection might fail. To prevent sound instability, please do not allow liquid to penetrate inside the product.

Notice (Handling)

1. Piezoelectric ceramic is used in this product. Please use care in handling, because ceramic is broken when excessive force is applied.
2. Please do not apply force to the piezoelectric diaphragm from the sound emission hole. If applying force, cracks occur and the sounds might become unstable.
3. Please do not drop the product or apply shock or temperature change to it. If so, the LSI might be destroyed by the charge (surge voltage) generated. Fig. 2 shows an example driving circuit using zener diode.

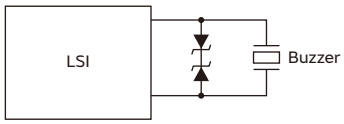

Fig. 2 Protect Circuit

Notice (Driving)

1. Ag migration might occur if DC voltage is applied to the product under a high humidity environment. Please avoid using it under high humidity and design the circuit not to apply DC voltage.
2. When driving the product by IC, please insert the resistance of 1k to 2kΩ in series. The purpose is to protect the IC and to obtain stable sound. (Please see Fig. 2a). Inserting a diode in parallel to the product has the same effect. (Please see Fig. 3b)

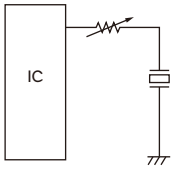

Fig. 3a

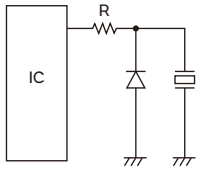

Fig. 3b

Piezoelectric Sound Components

RoHS

Piezoelectric Buzzers

This is a unified piezoelectric sounder that has a piezoelectric diaphragm of 3 terminals connected to a self-drive circuit, and it easily generates sound with only a DC power supply (DC3.0-15V). Using a suitably designed resonant system, this type can be used where large sound volumes are needed.



PKB24SPCH3601-B0

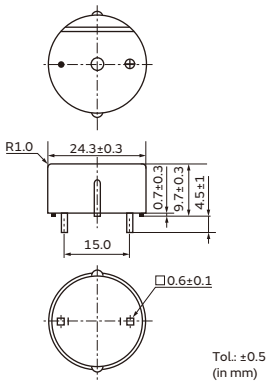

Applications

1. Gas alarms, burglar alarms
2. Air conditioners, microwave ovens and various types of microcomputer controlled home electronic appliances
3. Toys, games, and other simple electronic devices such as teaching aids

Part Number	Sound Pressure Level (min.)	Oscillating Frequency (kHz)	Current Consumption (mA)	Operating Voltage Range (Vdc)	Operating Temp. Range (°C)	Storage Temp. Range (°C)
PKB24SPCH3601-B0	90dB [12Vdc,10cm]	3.6 ±0.5kHz [12Vdc]	16 max. [12Vdc]	3.0 to 15.0	-20 to +70	-30 to +80

Voltage-Sound Pressure Level/Voltage-Consumption Current

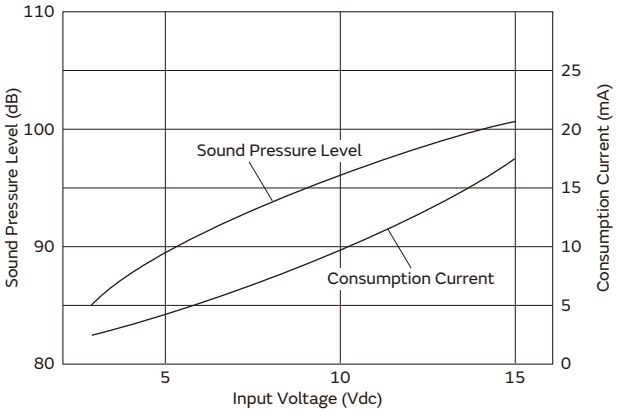

⚠Caution · Notice

⚠Caution (Rating)

Do not use the product beyond the rated temperature range and the rated voltage range. If using it beyond this range, characteristics might degrade.

Notice (Storage and Operating Condition)

1. Product Storage Condition
   Please store the products in a room where the temperature/humidity is stable and avoid places where there are large temperature changes. Please store the products under the following conditions.
   Temperature: -10 to +40°C
   Humidity: 15 to 85%R.H.
2. Expiration Date on Storage
   Expiration date (shelf life) of the products is six months after delivery under the condition of a sealed and unopened package. Please use the products within six months after delivery. If you store the products for a long time (more than six months), use carefully because the products may be degraded in solderability due to storage under poor conditions.
   Please confirm solderability and characteristics for the products regularly.
3. Notice on Product Storage
   (1) Please do not store the products in a chemical atmosphere (Acids, Alkali, Bases, Organic gas, Sulfides and so on), because the characteristics may be reduced in quality, may be degraded in solderability due to storage in a chemical atmosphere.
   (2) Please do not store the products directly on the floor without anything under them to avoid damp places and/or dusty places.
   (3) Please do not store the product in places such as in a damp heated place or any place exposed to direct sunlight or excessive vibration.
   (4) Please use the products immediately after the package is opened, because the characteristics may be reduced in quality, and/or be degraded in solderability due to storage under poor conditions.
   (5) Please be sure to consult with our sales representative or engineer whenever the products are to be used in conditions not listed above.
4. Operating Environment
   This product is designed for application in an ordinary environment (normal room temperature, humidity and atmospheric pressure).
   Do not use the products in a chemical atmosphere such as chlorine gas, acid or sulfide gas.
   Characteristics might degrade by a chemical reaction with the material used in products.

Notice (Soldering and Mounting)

1. Mounting
   When mounting a pin terminal type of product to the printed circuit board, please insert the pin terminal along the hole of the board. If the product is pressed so that the terminal is not in the hole, the pin terminal would be pushed into the inside of the product and the sounds might become unstable.
2. Double-sided through-hole Board
   Please avoid using a double-sided through-hole board. If the melted solder touched the base of a pin terminal, a part of the plastic case would melt and the sounds might become unstable.
3. Soldering Conditions
   (1) Flow soldering conditions for pin terminal type
   · Temperature: within +260°C±5°C
   · Time: within 10±1 sec.
   · Soldering part is the lead terminals excluding 1.5mm from product body.
   (2) Soldering condition by soldering iron for pin terminal type
   · Temperature: within 350±5°C
   · Time: within 3.0±0.5 sec.
   · Soldering part is the lead terminals excluding 1.5mm from product body.
4. Washing
   Please avoid washing, since this product is not a sealed structure.
5. After Mounting the Product
   (1) If the product is floating from the printed circuit board, please do not push it. When pressing, the pin terminal is pushed inside the product and the sounds might become unstable.
   (2) Please do not apply force (shock) to the product. If force is applied, the case might come off.
   (3) If the case comes off, please do not reassemble. Even if it seems to have returned to the original, the sounds might become unstable.
   (4) Please do not blow air onto the product directly. Blown air applies force to the piezoelectric diaphragm through the sound emission hole; cracks could occur and then the sounds could become unstable.

Continued on the following page.↗

⚠Caution · Notice

Continued from the preceding page.↘

6. Flux or Coating Agent, etc., Various Solvents
   It is possible for a liquid solvent to penetrate inside the product, since this product is not a sealed structure. If a liquid penetrated inside and attached to the piezoelectric diaphragm, its vibration could be inhibited. If attaching to an electrical junction, the electric connection might fail. To prevent sound instability, please do not allow liquid to penetrate inside the product.

Notice (Handling)

1. Piezoelectric ceramic is used in this product. Please use care in handling, because ceramic is broken when excessive force is applied.
2. Please do not apply force to the piezoelectric diaphragm from the sound emission hole. If applying force, cracks occur and the sounds might become unstable.
3. Please do not drop the product or apply shock or temperature change to it. If so, the LSI might be destroyed by the charge (surge voltage) generated.

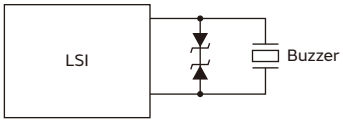

Fig. 1 Protect Circuit

Notice (Driving)

1. When using a piezoelectric buzzer, there is no need to prepare the oscillation circuit; it has an oscillation circuit.
2. Please set the sounding time more than 200 msec., when driving the piezoelectric sounder of self-drive or the piezoelectric buzzer as an intermittent sound.
3. Please don't block the sound emission hole with tape to control the sound volume. The oscillation circuit condition is set so as to obtain a stable sounding (oscillating) state under the condition that the front of sound emission hole is in an open state. If the sound emission hole is blocked with tape, then the oscillation condition changes and the sounds might become unstable.
4. Please don't put a resistor between the oscillation circuit and power supply to control the sound volume of the piezoelectric sounder or the piezoelectric buzzer. Doing so could cause an unstable sounding state like an abnormal oscillation or the oscillation stopping because of the change in oscillation conditions. Please insert a capacitor (about 1μF) in parallel with the piezoelectric buzzer, if you need to control the sound volume. (Please see Fig. 2)
5. Please keep a distance of more than 15mm between the surface of sound emission hole and the surface of housing, when mounting the piezoelectric sounder of self-drive or the piezoelectric buzzer into your set. A shorter distance could cause an unstable sounding state like an abnormal oscillation or the oscillation stopping; because the oscillation conditions change, the acoustics are influenced by reflection.

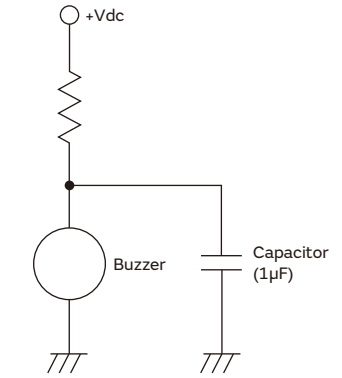

Fig. 2

Piezoelectric Sound Components

RoHS

Piezoelectric Diaphragms

Features

1. Clear sound
2. Ultra thin and lightweight
3. No contacts; therefore, noiseless and highly reliable
4. Low power consumption for voltage type

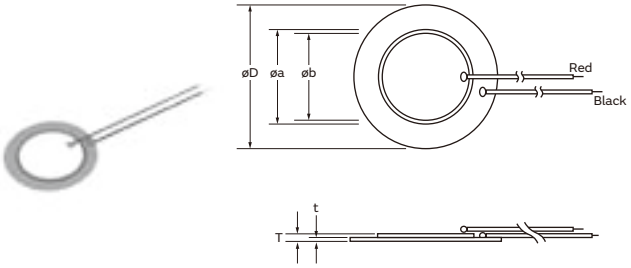

Applications

Clocks/Calculators/Digital camera/Various alarms (Burglar alarms, etc.)

* Murata's piezoelectric diaphragms for sound generation are specialized for functions that generate confirmation tones and other sounds. They cannot be used for other functions.

External Drive Type

Part Number	Resonant Frequency (kHz)	Resonant Impedance (Ω)	Capacitance (nF)	Plate Size øD (mm)	Element Size øa (mm)	Electrode Size øb (mm)	Thickness T (mm)	Plate Thickness t (mm)	Plate Material
7BB-12-9	9.0 ±1.0kHz	1000 max.	8.0 ±30% [1kHz]	12.0	9.0	8.0	0.22	0.10	Brass
7BB-15-6	6.0 ±1.0kHz	800 max.	10.0 ±30% [1kHz]	15.0	10.0	9.0	0.22	0.10	Brass
7BB-20-3	3.6 ±0.6kHz	500 max.	20.0 ±30% [1kHz]	20.0	14.0	12.8	0.22	0.10	Brass
7BB-20-6	6.3 ±0.6kHz	350 max.	10.0 ±30% [1kHz]	20.0	14.0	12.8	0.42	0.20	Brass
7BB-20-6L0	6.3 ±0.6kHz	1000 max.	10.0 ±30% [1kHz]	20.0	14.0	12.8	0.42	0.20	Brass (with Lead Wire: AWG32 Length 50mm)
7BB-27-4	4.6 ±0.5kHz	200 max.	20.0 ±30% [1kHz]	27.0	19.7	18.2	0.54	0.30	Brass
7BB-27-4L0	4.6 ±0.5kHz	300 max.	20.0 ±30% [1kHz]	27.0	19.7	18.2	0.54	0.30	Brass (with Lead Wire: AWG32 Length 50mm)
7BB-35-3	2.8 ±0.5kHz	200 max.	30.0 ±30% [1kHz]	35.0	25.0	23.0	0.53	0.30	Brass
7BB-35-3L0	2.8 ±0.5kHz	200 max.	30.0 ±30% [1kHz]	35.0	25.0	23.0	0.53	0.30	Brass (with Lead Wire: AWG32 Length 50mm)
7BB-41-2	2.2 ±0.3kHz	250 max.	30.0 ±30% [1kHz]	41.0	25.0	23.0	0.63	0.40	Brass
7BB-41-2L0	2.2 ±0.3kHz	300 max.	30.0 ±30% [1kHz]	41.0	25.0	23.0	0.63	0.40	Brass (with Lead Wire: AWG32 Length 50mm)
7NB-31R2-1	1.3 ±0.5kHz	300 max.	40.0 ±30% [120Hz]	31.2	19.7	18.2	0.22	0.10	Nickel Alloy

Design Procedure · Drive Method

Design Procedure

In general, man's audible frequency range is about 20Hz to 20kHz.
Frequency ranges of 2kHz to 4kHz are most easily heard. For this reason, most piezoelectric sound components are used in this frequency range and the resonant frequency (fo) is generally selected in the same range.
In general, the piezoelectric diaphragm is installed in a cavity to produce high sound pressure (Fig 1).
The resonant frequency (fcav) of the cavity in Fig. 1 is obtained from Formula (1) (Helmholtz's Formula).
Since the piezoelectric diaphragm and cavity have proper resonant frequencies, (fo) and (fcav) respectively, sound pressure in specific frequencies can be increased and a specific bandwidth can be provided by controlling both positions.

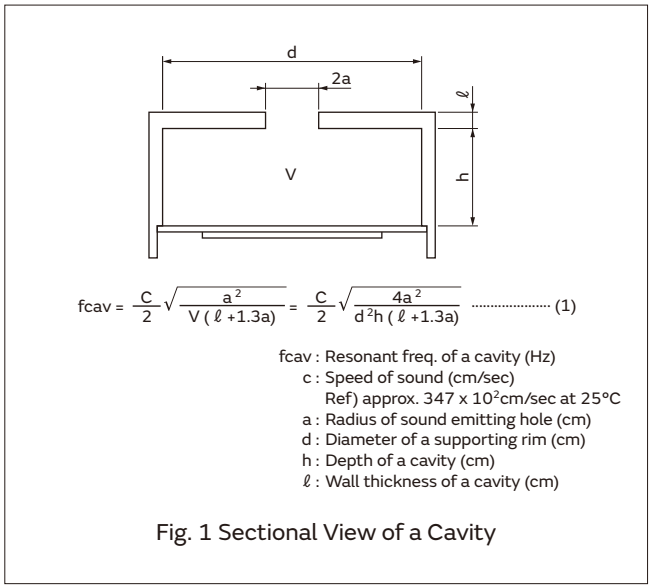

$$fcav = \frac{C}{2}\sqrt{\frac{a^2}{V(\ell+1.3a)}} = \frac{C}{2}\sqrt{\frac{4a^2}{d^2h(\ell+1.3a)}} \quad \cdots\cdots (1)$$

fcav : Resonant freq. of a cavity (Hz)
c : Speed of sound (cm/sec)
Ref) approx. 347 x 10^2cm/sec at 25°C
a : Radius of sound emitting hole (cm)
d : Diameter of a supporting rim (cm)
h : Depth of a cavity (cm)
ℓ : Wall thickness of a cavity (cm)

Fig. 1 Sectional View of a Cavity

Drive Method

This method produces sound by driving the piezoelectric diaphragm with electric signals supplied from an external oscillating circuit such as a multivibrator.
Using this method, the piezoelectric buzzer can work as a speaker. In this method, a mechanical oscillation Qm of the piezoelectric diaphragm is damped properly to provide a wider frequency band of the sound pressure. This is applied to the switching sounds of home electric appliances, key-in sounds of OA equipment, because it can provide multiple sounds, not just a single sound. Fig. 3 shows examples of the circuit to which the external drive method is applied:
(i) represents a circuit driven by output signals of the unstable multivibrator; (ii) represents a circuit using 2 NAND gates, which is oscillated or stopped by ON/OFF operations of the input signal; (iii) represents a circuit driven by output signals of CMOS LSI.

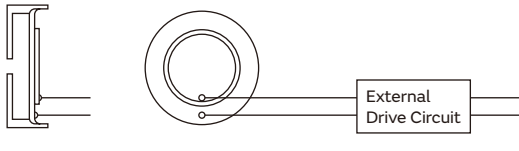

Fig. 2 Drive Procedure

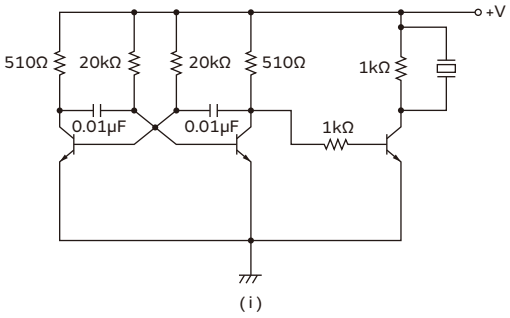

(i)

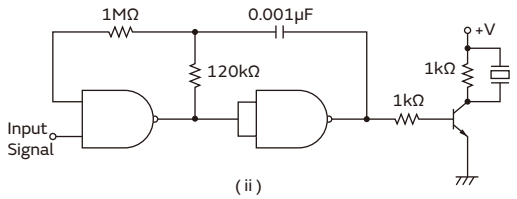

(ii)

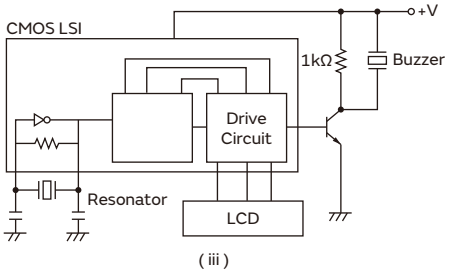

(iii)

Fig. 3 Examples of the External Drive Circuit

⚠Caution · Notice

⚠Caution (Rating)

Do not use the product beyond the rated temperature range. If using it beyond this range, characteristics might degrade.
The rated voltage range is not specified; depending on the driving condition or the mounting method, the rated voltage range is different. In your evaluation, please use actual operating voltage.

Notice (Storage and Operating Condition)

1. Product Storage Condition
   Please store the products in a room where the temperature/humidity is stable and avoid places where there are large temperature changes. Please store the products under the following conditions.
   Temperature: -10 to +40°C
   Humidity: 15 to 85%R.H.
2. Expiration Date on Storage
   Expiration date (shelf life) of the products is six months after delivery under the condition of a sealed and unopened package. Please use the products within six months after delivery. If you store the products for a long time (more than six months), use carefully because the products may be degraded in solderability due to storage under poor conditions.
   Please confirm solderability and characteristics for the products regularly.
3. Notice on Product Storage
   (1) Please do not store the products in a chemical atmosphere (Acids, Alkali, Bases, Organic gas, Sulfides and so on), because the characteristics may be reduced in quality, may be degraded in solderability due to storage in a chemical atmosphere.
   (2) Please do not store the products directly on the floor without anything under them to avoid damp places and/or dusty places.
   (3) Please do not store the product in places such as in a damp heated place or any place exposed to direct sunlight or excessive vibration.
   (4) Please use the products immediately after the package is opened, because the characteristics may be reduced in quality, and/or be degraded in solderability due to storage under poor conditions.
   (5) Please be sure to consult with our sales representative or engineer whenever the products are to be used in conditions not listed above.
4. Operating Environment
   This product is designed for application in an ordinary environment (normal room temperature, humidity and atmospheric pressure).
   Do not use the products in a chemical atmosphere such as chlorine gas, acid or sulfide gas.
   Characteristics might degrade by a chemical reaction with the material used in products.

Notice (Soldering and Mounting)

1. Mounting
   When mounting the product on your set, pressing force should be applied to only the supporting part. When force is applied to the non-supporting part, cracks might occur, causing unstable sounds.
2. Soldering
   (1) Please consult with a Murata representative if you need to solder the lead wires to the product. We can deliver the products with soldered lead wires.
   When soldering, it is recommended to solder by heating the product (from 60 to 80°C, more than 10 sec).
   Including the presence or absence of heating, please use after a thorough evaluation about soldering.
   Soldering condition is as follows.
   · Metal Plate
   Temperature of soldering iron: from 410 to 450°C
   Soldering Time: within 3 sec.
   · Ag electrode
   Temperature of soldering iron: from 320 to 350°C
   Soldering Time: within 0.5 sec.
   · Solder: Sn-Ag-Cu (Flux-cored solder)
   (2) Soldering condition of the lead wire to printed circuit board by using soldering iron.
   · Temperature: 350±5°C
   · Time: within 3.0±0.5 sec.

Continued on the following page.↗

⚠Caution · Notice

Continued from the preceding page.↘

Notice (Handling)

1. Piezoelectric ceramic is used in this product. Please use care in handling, because the ceramic is broken when excessive force is applied.
2. To avoid rusting, please do not touch the products with bare hands.
3. Please do not pull the lead wire of the product. Pulling may cause the lead wire to disconnect or to peel off the solder point.
4. When attaching a connector to the lead wires, please do not apply force to the soldering part. After attaching a connector, we recommend checking the connecting status.
5. Please do not bend the product or apply any force to it. Also, please do not press it with sharp objects. Applying force could cause cracks to occur in the piezoelectric ceramic, resulting in unstable sounds.
6. Please do not drop the product or apply shock or temperature change to it. If so, the LSI might be destroyed by the charge (surge voltage) generated. Fig.1 shows an example driving circuit using zener diode.

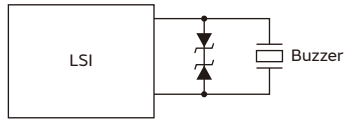

Fig. 1 Protect Circuit

Notice (Driving)

1. Ag migration might occur if DC voltage is applied to the product under a high humidity environment. Please avoid using it under high humidity and design the circuit not to apply DC voltage.
2. When driving the product by IC, please insert the resistance of 1k to 2kΩ in series. The purpose is to protect the IC and to obtain stable sound. (Please see Fig. 2a). Inserting a diode in parallel to the product has the same effect. (Please see Fig. 2b).

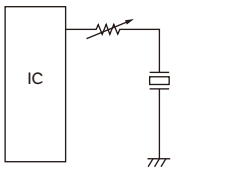

Fig. 2a

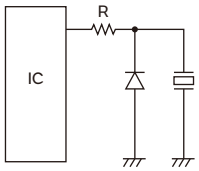

Fig. 2b

Oscillating System

Basically, the sound source of a piezoelectric sound component is a piezoelectric diaphragm. A piezoelectric diaphragm consists of a piezoelectric ceramic plate that has electrodes on both sides and a metal plate (brass or stainless steel, etc.).
A piezoelectric ceramic plate is attached to a metal plate with adhesives. Fig. 2 shows the oscillating system of a piezoelectric diaphragm.
Applying DC voltage between electrodes of a piezoelectric diaphragm causes mechanical distortion due to the piezoelectric effect. For a misshapen piezoelectric element, the distortion of the piezoelectric element expands in a radial direction, and the piezoelectric diaphragm bends toward the direction shown in Fig. 2 (a). The metal plate bonded to the piezoelectric element does not expand. Conversely, when the piezoelectric element shrinks, the piezoelectric diaphragm bends in the direction shown in Fig. 2 (b). Thus, when AC voltage is applied across electrodes, the bending shown in Fig. 2 (a) and Fig. 2 (b) is repeated as shown in Fig. 2 (c), producing sound waves in the air.

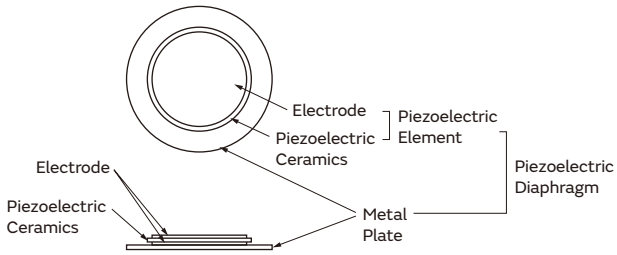

Fig. 1 Structure of Piezoelectric Diaphragm

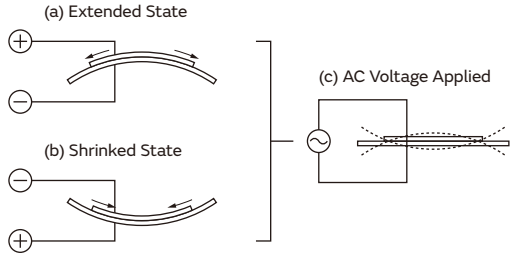

Fig. 2 Oscillation System

To Raise Sound Pressure Level (S.P.L.)

It is probable that the S.P.L. of Piezoelectric sound components is higher when the input voltage is higher because Piezoelectric sound components are driven by voltage. The SPL when the input voltage being converted from V1 to V2 can be calculated from the following formula.

SPL at V2 = SPL at V1 + 20log (V2/V1)

V1: previous input voltage

V2: increased input voltage

Therefore, S.P.L. is theoretically getting 6dB higher as the input voltage is twice as high.

Fig. 1 represents S.P.L. - frequency characteristics for PKLCS1212E4001-R1 in which the input voltage is varied. We can see that S.P.L. is approximately getting 6dB higher as the input voltage is twice as high.

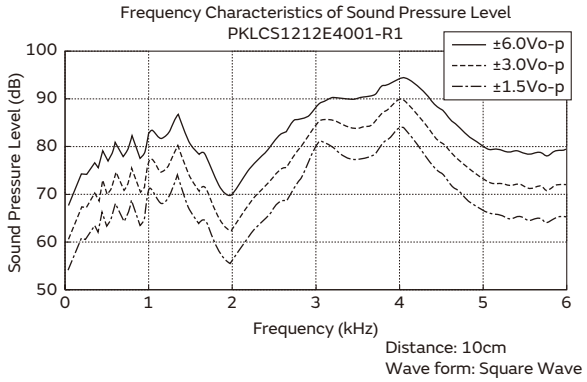

Fig. 1 Frequency Characteristics of Sound Pressure Level

In summary, the following are typical examples of raising S.P.L.

(1) (i), (ii), (iii) in Fig. 3 (Examples of the External Drive Circuit) (page 20), input DC voltage for Piezoelectric sound components should be getting higher. Variable range of input voltage should be less than maximum input voltage.

(2) In a case that is driven by IC directly like as Fig. 2, input voltage of Piezoelectric sound components should be twice as high because of the BTL (Bridge Tied Load) drive circuit, which includes an inverter.

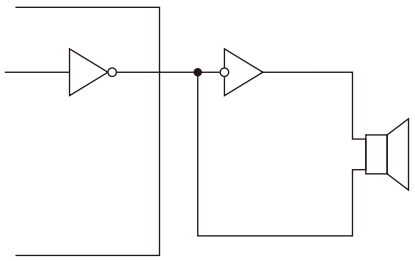

Fig. 2 Example of BTL Drive Circuit by 1-port Output IC for Buzzer

Measuring Method

Measuring Procedure

Measurement of Resonant Frequency and Resonant Impedance

When the piezoelectric diaphragm oscillates freely in air, the node does not move as shown in Fig. 1. With this point held with a measuring terminal, the resonant frequency (f_0) and resonant impedance (R_0) are measured in the constant-current circuit as shown in Fig. 2.

Measuring Procedure

1) Connect the switch to side "a" and adjust frequency of the oscillator to read the frequency and the voltage when the voltmeter indicates a minimum value.
2) Next connect the switch to side "b" and vary the variable resistor to have the same voltage as in 1). Then, read the value of the resistor.
3) The resonant frequency (f_0) can be obtained from 1) and the resonant impedance (R_0) from 2).

Note: Actual measurement is performed using a measuring unit in accordance with the above principles.

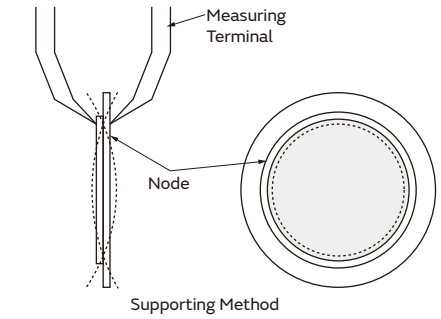

Fig. 1 Measurement of Piezoelectric Diaphragm

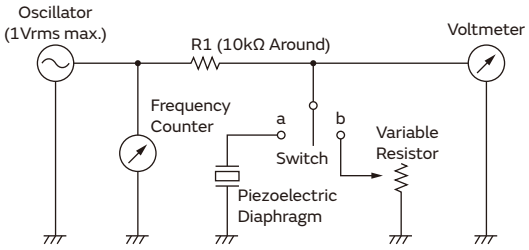

Fig. 2 Measurement Set-Up of Resonant Freq. and Resonant Impedance

Measurement of Sound Pressure Level (S.P.L.)

The sound pressure level is measured with a sound pressure level meter as shown in Fig. 3.

Note: The relation between sound pressure level and distance between sound pressure level and voltage can be expressed with Formula (2). The value of the sound pressure level under different operating conditions can be easily calculated using values specified in the catalog.

S.P.L.(dB) [under actual operating conditions]
= S.P.L.(dB) [value specified in catalog]
+20 log (B/A) ·····(2)

In case of relation with distance:
A = Actual distance
B = Distance specified in catalog

In case of relation with voltage:
A = Voltage specified in catalog
B = Actual operating voltage

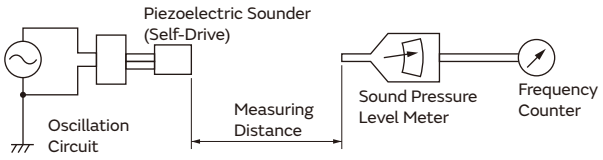

Fig. 3 Measurement Set-Up of S.P.L.

Minimum Quantity

Product Names	Part Number	Minimum Quantity (pcs.)		
		Ø330mm Reel	Bulk (Box)	Ammo Pack
● Piezoelectric Sounders	PKLCS1212E2000-R1	1000		
	PKLCS1212E20A0-R1	1000		
	PKLCS1212E2400-R1	1000		
	PKLCS1212E24A0-R1	1000		
	PKLCS1212E4001-R1	1000		
	PKLCS1212E40A1-R1	1000		
	PKMCS0909E4000-R1	2000		
	PKMCS0909E48H0-R1	1250		
	PKMCS1818E20A0-R1	250		
	PKHPS0013E4000-A2			500
	PKM17EPP-2002-B0		1000	
	PKM22EPPH2001-B0		750	
	PKM22EPPH2002-B0		750	
	PKM22EPPH4001-B0		900	
	PKM22EPPH4002-B0		900	
	PKM22EPPH4005-B0		750	
	PKM22EPPH4007-B0		750	
	PKM22EPPH4012-B0		750	
● Piezoelectric Buzzers	PKB24SPCH3601-B0		650	
● Piezoelectric Diaphragms	7BB-12-9		5120	
	7BB-15-6		8000	
	7BB-20-3		3000	
	7BB-20-6		1800	
	7BB-20-6L0		600	
	7BB-27-4		1500	
	7BB-27-4L0		600	
	7BB-35-3		800	
	7BB-35-3L0		400	
	7BB-41-2		400	
	7BB-41-2L0		250	
	7NB-31R2-1		3000	

P37E.pdf
Feb. 1,2022
Cat. No. P37E-30

Global Locations

For details please visit www.murata.com



⚠Note

1 Export Control

For customers outside Japan:

Murata requests customers to ensure that no Murata products are used or sold, through any channels, for use in the design, development, production, utilization, maintenance or operation of, or otherwise contribution to Weapons of Mass Destruction (nuclear, chemical or biological weapons or missiles), conventional weapons, or items specially designed for them.

For customers in Japan:

For products which are controlled items subject to the "Foreign Exchange and Foreign Trade Law" of Japan, the export license specified by the law is required for export.

2 Please contact our sales representatives or product engineers before using the products in this catalog for the applications listed below, which require especially high reliability for the prevention of defects which might directly damage a third party's life, body or property, or when one of our products is intended for use in applications other than those specified in this catalog.

1. *Aircraft equipment*
2. *Aerospace equipment*
3. *Undersea equipment*
4. *Power plant equipment*
5. *Medical equipment*
6. *Transportation equipment (vehicles, trains, ships, etc.)*
7. *Traffic signal equipment*
8. *Disaster prevention / crime prevention equipment*
9. *Data-processing equipment*
10. *Application of similar complexity and/or reliability requirements to the applications listed above*

3 Product specifications in this catalog are as of February 2022. They are subject to change or our products in it may be discontinued without advance notice. Please check with our sales representatives or product engineers before ordering. If there are any questions, please contact our sales representatives or product engineers.

4 Please read rating and ⚠CAUTION (for storage, operating, rating, soldering, mounting and handling) in this catalog to prevent smoking and/or burning, etc.

5 This catalog has only typical specifications. Therefore, please approve our product specifications or transact the approval sheet for product specifications before ordering.

6 Please note that unless otherwise specified, we shall assume no responsibility whatsoever for any conflict or dispute that may occur in connection with the effect of our and/or a third party's intellectual property rights and other related rights in consideration of your use of our products and/or information described or contained in our catalogs. In this connection, no representation shall be made to the effect that any third parties are authorized to use the rights mentioned above under licenses without our consent.

7 No ozone depleting substances (ODS) under the Montreal Protocol are used in our manufacturing process.

Murata Manufacturing Co., Ltd.

www.murata.com

muRata
INNOVATOR IN ELECTRONICS