DS84LCB / DS85LCB / DS86C

Inductance Range: 1.0~100μH(DS84LCB), 1.0~100μH(DS85LCB), 1.3~220μH(DS86C)

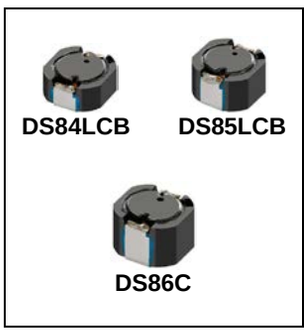

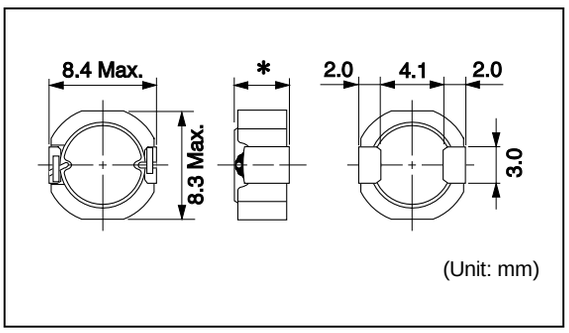

Recommended patterns
推荐焊盘尺寸

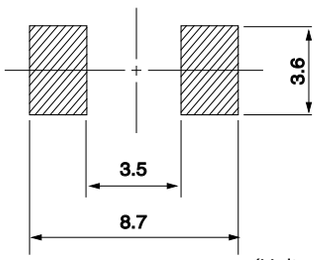

* : DS84LCB; 4.0mm Max.

DS85LCB; 5.0mm Max.

DS86C ; 6.8mm Max.

FEATURES 特点

- 8.4 × 8.3mm Max. square, 4.0, 5.0, and 6.8mm Max. height).
- Magnetically shielded construction and low DC resistance.
- Suitable for large currents.
- RoHS compliant.
- 最大8.4×8.3毫米的平面，最大高度4.0, 5.0和6.8毫米
- 磁性屏蔽结构和低直流电阻
- 适合大电流
- 符合RoHS指令

STANDARD PART NUMBERS 标准零件号码

TYPE DS84LCB (Quantity/reel; 500 PCS)

零件号码	电感值[1]	公差	最大直流电阻[2] (典型)	最大电感值减小电流[3] (典型)		最大温度上升电流[3] (典型)
Part Number	Inductance[1] (μH)	Tolerance (%)	DC Resistance[2] (mΩ) Max. (Typ.)	Inductance Decrease Current[3] (A) Max. (Typ.) $\frac{\Delta L}{L}$ =10%	$\frac{\Delta L}{L}$ =30%	Temperature Rise Current[3] ΔT=40°C (A) Max. (Typ.)
B1134AS-1R0N=P3	1.0	±30	11 (8.9)	8.1 (10.8)	10.2 (13.5)	8.0 (9.4)
B1134AS-1R5N=P3	1.5	±30	13 (11)	6.6 (8.8)	8.4 (11.2)	6.9 (8.1)
B1134AS-2R2N=P3	2.2	±30	17 (15)	5.6 (7.5)	7.1 (9.5)	5.4 (6.4)
B1134AS-2R7N=P3	2.7	±30	19 (16)	4.9 (6.5)	6.2 (8.3)	5.3 (6.2)
B1134AS-3R9N=P3	3.9	±30	24 (20)	4.4 (5.9)	5.6 (7.4)	4.7 (5.5)
B1134AS-4R7N=P3	4.7	±30	30 (25)	3.9 (5.2)	5.0 (6.6)	4.0 (4.7)
B1134AS-6R8N=P3	6.8	±30	43 (36)	3.2 (4.3)	4.2 (5.5)	3.3 (3.9)
B1134AS-100M=P3	10	±20	57 (47)	2.8 (3.7)	3.5 (4.7)	2.7 (3.1)
B1134AS-150M=P3	15	±20	80 (66)	2.2 (3.0)	2.8 (3.8)	2.3 (2.7)
B1134AS-220M=P3	22	±20	120 (100)	1.8 (2.4)	2.3 (3.1)	1.8 (2.1)
B1134AS-330M=P3	33	±20	170 (140)	1.5 (2.2)	1.9 (2.5)	1.4 (1.7)
B1134AS-470M=P3	47	±20	255 (210)	1.2 (1.6)	1.5 (2.0)	1.2 (1.4)
B1134AS-680M=P3	68	±20	340 (285)	1.0 (1.3)	1.3 (1.7)	1.0 (1.2)
B1134AS-101M=P3	100	±20	460 (385)	0.83 (1.1)	1.1 (1.4)	0.93 (1.0)

continued on next page 接下页

continued from previous page 接上页

STANDARD PART NUMBERS 标准零件号码

TYPE DS85LCB (Quantity/reel; 500 PCS)

零件号码	电感值(1)	公差	最大直流电阻(2) (典型)	最大电感值减小电流(3) (典型)		最大温度上升电流(3) (典型)
Part Number	Inductance(1) (μH)	Tolerance (%)	DC Resistance(2) (mΩ) Max. (Typ.)	Inductance Decrease Current(3) (A) Max. (Typ.) $\frac{\Delta L}{L}$ =10%	$\frac{\Delta L}{L}$ =30%	Temperature Rise Current(3) ΔT=40°C (A) Max. (Typ.)
B1135AS-1R0N=P3	1.0	±30	9.6 (8.0)	7.8 (10.4)	10.1 (13.4)	8.5 (10.0)
B1135AS-1R5N=P3	1.5	±30	11 (9.3)	6.3 (8.4)	8.3 (11.0)	7.6 (9.0)
B1135AS-2R2N=P3	2.2	±30	13 (11)	5.5 (7.3)	7.1 (9.5)	7.3 (8.6)
B1135AS-2R7N=P3	2.7	±30	14 (12)	4.7 (6.3)	6.2 (8.3)	6.5 (7.6)
B1135AS-3R6N=P3	3.6	±30	17 (14)	4.2 (5.6)	5.6 (7.4)	5.5 (6.5)
B1135AS-4R7N=P3	4.7	±30	21 (17)	3.7 (5.0)	4.9 (6.6)	5.1 (6.0)
B1135AS-6R8N=P3	6.8	±30	29 (25)	3.1 (4.1)	4.1 (5.4)	4.0 (4.7)
B1135AS-100M=P3	10	±20	45 (38)	2.4 (3.2)	3.2 (4.3)	3.3 (3.8)
B1135AS-150M=P3	15	±20	64 (53)	2.0 (2.7)	2.6 (3.5)	2.5 (2.9)
B1135AS-220M=P3	22	±20	84 (70)	1.7 (2.3)	2.2 (3.0)	2.3 (2.7)
B1135AS-330M=P3	33	±20	110 (90)	1.4 (1.9)	1.8 (2.4)	1.9 (2.3)
B1135AS-470M=P3	47	±20	150 (125)	1.2 (1.6)	1.5 (2.1)	1.6 (1.9)
B1135AS-680M=P3	68	±20	235 (195)	0.97 (1.3)	1.3 (1.7)	1.3 (1.5)
B1135AS-101M=P3	100	±20	330 (275)	0.79 (1.1)	1.1 (1.4)	1.1 (1.3)

TYPE DS86C (Quantity/reel; 500 PCS)

零件号码	电感值(1)	公差	最大直流电阻(2) (典型)	最大电感值减小电流(3) (典型)		最大温度上升电流(3) (典型)
Part Number	Inductance(1) (μH)	Tolerance (%)	DC Resistance(2) (mΩ) Max. (Typ.)	Inductance Decrease Current(3) (A) Max. (Typ.) $\frac{\Delta L}{L}$ =10%	$\frac{\Delta L}{L}$ =30%	Temperature Rise Current(3) ΔT=40°C (A) Max. (Typ.)
B992AS-1R3N=P3	1.3	± 30	14 (11)	8.3 (11.1)	11 (14.4)	6.1 (7.2)
B992AS-2R0N=P3	2.0	± 30	15 (12)	6.8 (9.1)	8.9 (11.9)	6.0 (7.0)
B992AS-2R7N=P3	2.7	± 30	17 (14)	5.9 (7.9)	7.7 (10.2)	5.5 (6.5)
B992AS-3R3N=P3	3.3	± 30	21 (17)	5.2 (6.9)	6.7 (8.9)	4.8 (5.7)
B992AS-4R3N=P3	4.3	± 30	22 (18)	4.6 (6.1)	5.9 (7.9)	4.8 (5.7)
B992AS-5R6N=P3	5.6	± 30	26 (21)	4.1 (5.5)	5.3 (7.1)	4.3 (5.1)
B992AS-6R8N=P3	6.8	± 30	28 (23)	3.8 (5.0)	4.8 (6.4)	4.1 (4.8)
B992AS-8R2N=P3	8.2	± 30	30 (25)	3.4 (4.5)	4.4 (5.9)	3.9 (4.6)
B992AS-100M=P3	10	± 20	36 (30)	2.9 (3.9)	3.8 (5.0)	3.6 (4.2)
B992AS-150M=P3	15	± 20	41 (34)	2.6 (3.4)	3.3 (4.4)	3.3 (3.9)
B992AS-220M=P3	22	± 20	74 (61)	2.0 (2.7)	2.6 (3.5)	2.5 (2.9)
B992AS-330M=P3	33	± 20	120 (100)	1.6 (2.1)	2.1 (2.8)	1.9 (2.2)
B992AS-470M=P3	47	± 20	150 (120)	1.4 (1.8)	1.8 (2.4)	1.7 (2.0)
B992AS-680M=P3	68	± 20	210 (170)	1.1 (1.5)	1.5 (2.0)	1.4 (1.6)
B992AS-101M=P3	100	± 20	310 (255)	0.98 (1.3)	1.2 (1.6)	1.1 (1.3)
B992AS-151M=P3	150	± 20	400 (330)	0.75 (1.0)	0.98 (1.3)	0.94 (1.1)
B992AS-221M=P3	220	± 20	560 (460)	0.65 (0.86)	0.83 (1.1)	0.80 (0.94)

(1) Inductance is measured with a LCR meter 4284A (Agilent Technologies) or equivalent.
Test frequency at 100kHz
(2) DC resistance is measured with 34420A (Agilent Technologies) or 3541(HIOKI). (Reference ambient temperature 25°C)
(3) Maximum allowable DC current is that which causes a 10% inductance reduction from the initial value, or coil temperature to rise by 40°C, whichever is smaller. (Reference ambient temperature 20°C)

(1) LCR仪表4284A (Agilent技术)或者功能相同的仪器在100kHz下测试电感值。
(2) 通过数码万用表34420A（Agilent技术）或者3541(HIOKI)测试直流电阻。（环境温度为25°C）
(3) 允许最大直流电的范围是以下两者中比较小的一个：引起电感值从最初值降低10%，或者线圈温度升高40°C。（参考周围环境温度20°C）。