# DCA-20PC Series

## LED Display, Subminiature DC Ammeters with Built-In Shunts

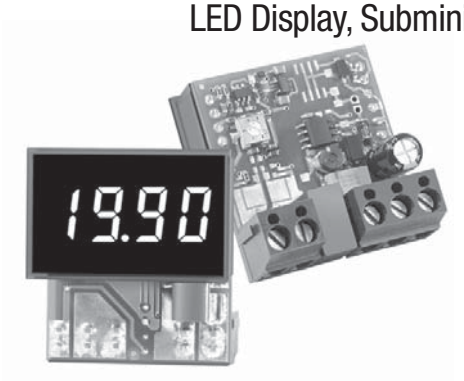


## FEATURES

- Built-in shunts for digitally measuring dc currents from 200uA to 20A
- Functionally complete – no additional components required
- Wide power supply inputs:
  5 to 40Vdc for 5V/12/24V/28V applications
  36-75V option for telecom supplies
- 8-36Vdc Isolated-supply models for high-side shunts
- 20mV internal shunt minimizes power loss
- Includes load connections for easy 3 or 4-wire operation
- High resolution; Factory calibrated to ±0.1% accuracy
- Large, easy-to-read, LED display with 0.37" (9.4mm) high digits
- Available with red, blue or green LED displays
- Small 1.38″ x 0.88″ x 1.0″ package

Murata Power Solutions' new DCA-20PC Series are the first digital dc ammeters to include built-in shunts for measuring dc currents up to 20A. Six ranges provide for precision measurement of dc currents from 200uA to 20A. These ammeters are 100% self-contained; no calibration or user-supplied components are required—they even include terminal blocks for your external load circuit, a feature that enables simple 3-wire operation!

Two shunt-configurations are offered: grounded-shunt ("low side"), 5-40V-powered models for cost-sensitive applications, and 8-36V isolated-supply models for high side or floating shunt applications. A versatile power supply design accommodates all popular supply voltages from 5 to 75Vdc. Reverse-polarity-protected supply inputs ensure trouble free installation. And, because many dc ammeters are installed in battery backup applications, power consumption is typically below 1 Watt for 8-36V models, and below 75mW for 5-40V models. To further reduce overall power consumption, the voltage dropped across its built-in series shunt is only 20mV!

DCA-20PC Series ammeters are housed in subminiature, 1.38″ x 0.88″ (35mm x 22mm), rugged packages that feature a large, 0.37″/9.4mm high, LED display. A built-in, high-contrast color filter ensures that legibility is not compromised: the display can be easily read at distances up to 15 feet (5 meters). Available LED-display colors include brilliant blue, bright green, and standard red.

Built-in shunts, Precision electronics, miniature size, wide power supply inputs, low power consumption, and no-hassle 3-wire installation make DCA-20PC Series the ideal choice for all your 200uA to 20A ammeter-applications.

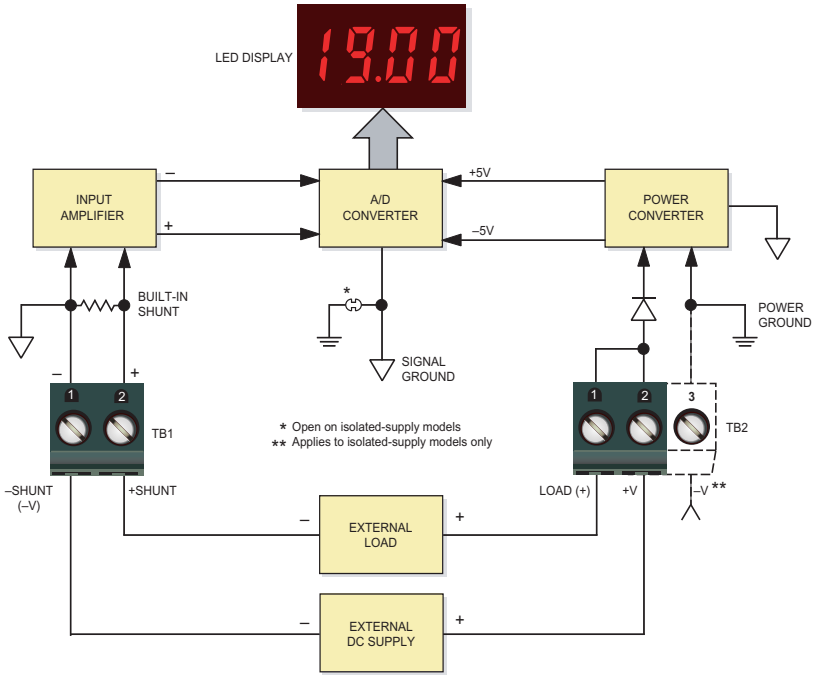


Figure 1. Simplified Schematic

RoHS COMPLIANT

For full details go to www.murata-ps.com/rohs

## Performance/Functional Specifications

Typical at $T_A$ = +25°C, unless otherwise noted.

| Full Scale Load Current ① | Min. | Typ. | Max. | Units |
|---|---|---|---|---|
| **DCA-20PC-1** | – | – | 199.9 | µAdc |
| **DCA-20PC-2** | – | – | 1.999 | mAdc |
| **DCA-20PC-3** | – | – | 19.99 | mAdc |
| **DCA-20PC-4** | – | – | 199.9 | mAdc |
| **DCA-20PC-5** | – | – | 1.999 | Adc |
| **DCA-20PC-6** | – | – | 19.99 | Adc |
| Overcurrent Rating (<6 sec.) ② | 1.5x rated full-scale load current | | | |
| **Internal Shunt Resistance** | | | | |
| **DCA-20PC-1** | – | – | 100 | Ohms |
| **DCA-20PC-2** | – | – | 10 | Ohms |
| **DCA-20PC-3** | – | – | 1.0 | Ohm |
| **DCA-20PC-4** | – | – | 0.1 | Ohm |
| **DCA-20PC-5** | – | – | 0.01 | Ohm |
| **DCA-20PC-6** | – | – | 0.001 | Ohm |
| **Shunt Input to Power Supply Isolation** ③ | | | | |
| **DCA-20PC-X-DC4** models only | 500 | – | – | Volts |
| **Performance** | | | | |
| **Sampling Rate** | 2.5 reading per second | | | |
| **Accuracy** | ±0.15%FS | | | |
| **Zero-Current Reading** ④ | "–001" | "000" | "001" | Counts |
| **Temperature Drift** (0 = +60°C) | – | ±0.2 | ±0.4 | Cnts/°C |
| **Operating Supply Voltage (TB2 Terminals 1, 2 and 3)** ⑤ | | | | |
| DCA-20PC-X-**DC1**-XX | +5.0 | – | +40 | Vdc |
| DCA-20PC-X-**DC4**-XX | +8 | – | +36 | Vdc |
| **Operating Supply Current (TB2 Terminals 1, 2 and 3)** ⑤ | | | | |
| DCA-20PC-X-**DC1**-XX (@ 5-40V) | – | 10 | 15 | mAdc |
| DCA-20PC-X-**DC4**-XX (@ 8V) | – | 100 | 150 | mAdc |
| DCA-20PC-X-**DC4**-XX (@ 36V) | – | 25 | 40 | mAdc |
| **TB1 and TB2 Terminal Blocks** | | | | |
| **Wire Size** | 12-20AWG, (solid)<br>14-20AWG, (stranded) copper wire | | | |
| **Insulation Strip Length** | 0.250 inches | | | |
| **Screw Tightening Torque** | 4.4 pound/inches (0.5Nm) | | | |
| **Rated Current** | 20A with 12AWG solid copper wire;<br>15A with 14AWG solid or stranded copper wire | | | |
| **Display** | | | | |
| **Display Type and Size** | 3½ digit, 0.37"/9.4mm high red, blue or green LED | | | |
| **Overrange Indication** | "–1_ _ _" for negative Vin<br>"1_ _ _" for positive Vin | | | |
| **Display Reading/Decimal Point** | Model dependent | | | |
| **Physical/Environmental** | | | | |
| **Operating Temperature** | 0 | – | +60 | °C |
| **Storage Temperature** | –20 | – | +75 | °C |

| Physical/Environmental (continued) | | | | |
|---|---|---|---|---|
| **Humidity (non-condensing)** | 0 | – | 85 | % |
| **Case Material** | Polycarbonate | | | |
| **Dimensions** | 1.38"W x 0.88" x 1.0" nominal | | | |
| **Weight** | 0.6 ounces (17 grams) | | | |

## Ordering Information

**DCA-20PC - 1 - DC1 - R L - C**

Add **-C** for RoHS

**LED Color:**
**BL** = Low-Power Blue
**BS** = Super Blue
**GS** = Standard Green
**PGL** = Low-Power Green
**RL** = Low-Power Red

**Input Range:**
Full-scale load current
**1** = 199.9µA
**2** = 1.999mA
**3** = 19.99mA
**4** = 199.9mA
**5** = 1.999A
**6** = 19.99A

**Power Supply:**
**DC1** = +5-40Vdc, non-isolated power (available with -RL, -BL, or -PGL LEDs)
**DC4** = +8-36Vdc, isolated power (available with -RL, -BS, or -GS LEDs)

**See www.murata-ps.com/dpm-availability for model-specific availability.**

**Accessories:**
**DMS-20-CP** Panel Cutout Punch
A **DMS-BZL4-C** bezel assembly with sealing gasket is supplied with each ammeter.

① The noted full-scale values are the external load currents that the ammeter is designed to measure. This current enters TB-1 (-SHUNT), passes through the ammeter's built-in shunt and exits via TB1-2 (+SHUNT). For all models, this same full-scale load current can also be routed, if the user so chooses, through TB2-1 and TB2-2 (connection to positive rail of power supply). See detailed wiring diagrams.

**Measuring positive and negative currents (bipolar operation)**: In applications where both positive and negative currents must be measured, Murata Power Solutions recommends using '-DC4' 8-36V isolated supply models. Negative current flow is denoted by the illumination of the display's negative (-) sign; the absence of a negative sign implies positive current flow. Contact MPS if you have any questions regarding bipolar operation of DCA-20PC ammeters.

② For all models, the application of 1.5 times the rated full-scale load current is permissible as long as this overcurrent condition does not exceed 6 seconds and occurs no more than once in a 60 second interval (10% duty cycle).

③ Breakdown (isolation) voltage applies only to '-DC4' isolated-power models. Breakdown voltage is tested with TB1-1 tied to TB1-2 (-SHUNT shorted to +SHUNT), and TB2-1, TB2-2, and TB2-3 all tied together (+V shorted to -V). 500Vdc is then applied between the two shorted terminal-block pairs; the maximum permissible leakage current is 5uA.

④ Zero reading is measured with TB1-1 (-SHUNT) shorted to TB1-2 (+SHUNT).

⑤ The Operating power supply voltage is applied to TB2-1-2 (+V) and TB2-3 (-V) on '-DC4' models, and to TB1-1 (-SHUNT) and TB2-2 (+V) on '-DC1' models. On all models, TB2-1 and TB2-2 are internally tied together (+V). Operating supply current is the current which powers the meter's analog and digital circuits; it is measured with zero load-current passing through the ammeter's built-in shunt (i.e., with the display reading "000" and one decimal point enabled).

On 5-40Vdc powered ('-DC1'), grounded-shunt models, the ammeter's operating supply current enters TB1-1 (-Shunt) but is not included in the displayed reading (i.e., it does not pass through the built-in shunt).

## TECHNICAL NOTES

**To ensure safe and reliable operation, DCA-20PC dc ammeters must be installed and serviced by qualified technical personnel. DC ammeter applications can expose a user to potentially lethal currents and voltages. Power and load connections must be made with all associated power sources de-energized. Contact Murata Power Solutions if you have any questions regarding installation or operation of any of our digital instruments.**

**1. Calibration:** DCA-20PC ammeters are factory calibrated using a high-precision current source. Under normal indoor operating conditions, periodic recalibration is not necessary. The calibration potentiometer, located on the back of the ammeter, is a ¾ turn type; do not force its adjustment screw past the two end stops. If recalibration is necessary, it must be performed by qualified personnel. Calibration is performed by applying a precision current source to TB1's -SHUNT and +SHUNT terminals. For best results, use a load current that is approximately 95% of the ammeter's full-scale rating.

The calibration current source and power supply inputs must be connected per the appropriate model-specific wiring diagram shown later in this data sheet. Using an insulated slotted tool, adjust the calibration potentiometer until the display is within ±1 count of the desired reading. Please note, the potentiometer provides an adjustment range of approximately ±1%. Contact Murata Power Solutions if additional information is required regarding calibration or setup of DCA-20PC ammeters.

**2. Wiring and Fusing:** Power supply (TB2) and input (TB1) wiring must be rated for the electrical and environmental conditions under which the ammeters will be operated. They must also comply with any regulatory or application-mandated requirements pertaining to the user's installation. Connections to DCA-20PC ammeters must be made with all power sources de-energized. Refer to the Functional Specifications section for detailed wire type and wire gauge information.

DCA-20PC ammeters' power supply and shunt terminals are not internally fused. Therefore, the supply wires connected to both the meter and the load must be fused according to the maximum current rating (or lower) of the wire gauge used, in accordance with applicable regulatory codes.

Wiring Insulation should be stripped to within +/-10% of the stated dimensions. All wires must be inserted into the terminal block openings such that the screw terminal does not pinch any insulation. After final assembly, inspect all terminal block connections for shorts between adjacent conductors; this step is particularly important when using stranded wire.

**3. Terminal Block Torque Ratings and Wire Size:** It is important to tighten all TB1 and TB2 screw-terminals to their torque specification of 4.4 pound-inches (0.5Nm). Proper tightening will minimize thermal/electrical losses and ensure reliable operation. Under severe operation conditions (for example, vibration, high continuous load currents, and wide variations in ambient temperature), 25% over-tightening is permissible. Applications subject to vibration should use stranded wire.

Proper terminal block torque is extremely important on all 20A models (DCA-20PC-6 part numbers). Loose connections can overheat, thereby posing a potential fire hazard to the terminal blocks, the load and supply wiring, the ammeters themselves, and nearby equipment. 20A models must use either 14AWG stranded or 12 AWG solid copper wires only. However, in some applications, regulations can limit the continuous current flowing in 14AWG solid or stranded copper wire to 15A maximum.

**4. High-Side versus Low-Side Shunts:** Incorrect shunt connections are one of the most common problems encountered when applying digital dc-ammeters. Incorrect shunt connections can cause permanent damage to the ammeter and its associated equipment.

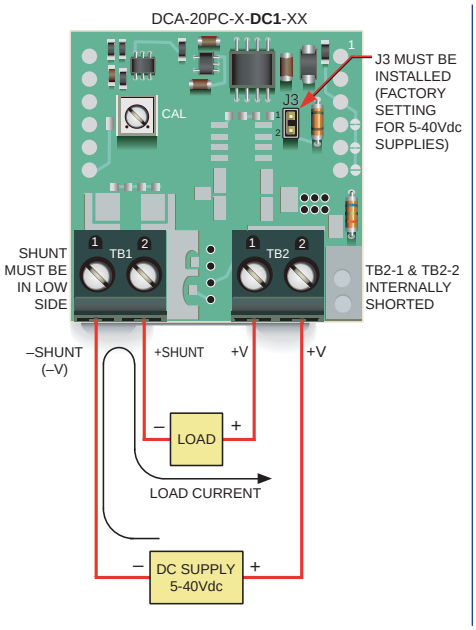


Figure 2A. Low-Side Shunt Connections for "-DC1" 5-40Vdc Non-Isolated Supply Models

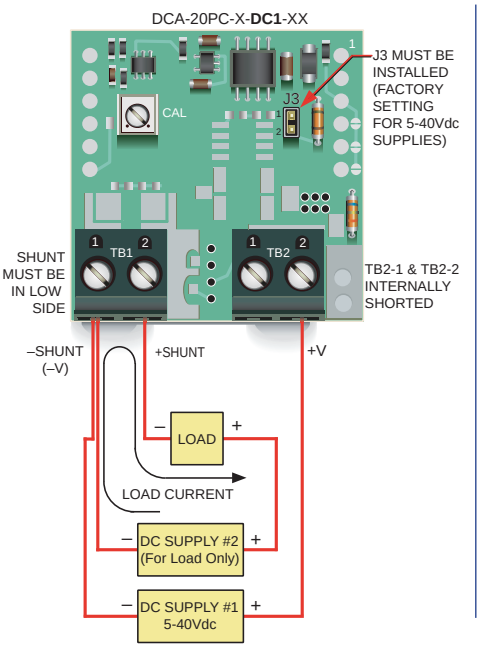


Figure 2B. Low-Side Shunt Connections for "-DC1" Models using Two Power Supplies

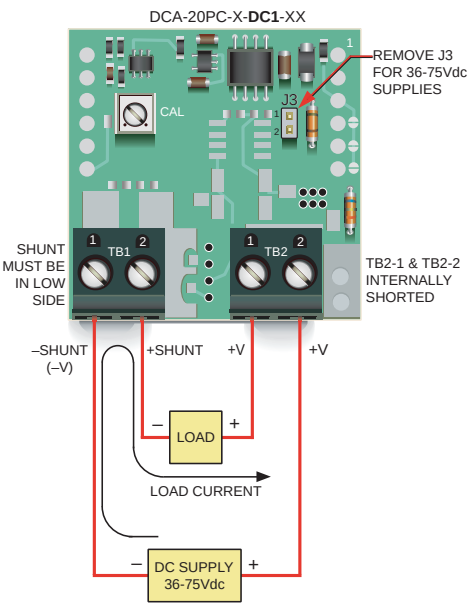


Figure 3. Low-Side Shunt Connections for "-DC1" Models Modified for 36-75Vdc Non-Isolated Power (See Technical Note 6)

## TECHNICAL NOTES

**Low-side shunts:** Applications that employ a single power supply to power both the load and the ammeter, and the external shunt is located in the negative side of the supply (commonly referred to as "low side" or "grounded shunt") should use '-DC1' non-isolated power DCA-20PC Series ammeters. Figures 2 and 3 depict typical low-side shunt connections.

**High-side shunts:** '-DC4' 8-36Vdc isolated-power models must be used in all applications that employ a single power supply to power both the load and the ammeter and the shunt is located in the high side (positive terminal) of the power supply. Figures 4 and 5 depict typical high-side shunt connections. As shown in Figure 5, '-DC4' isolated-power models can also be used in applications where one supply powers the ammeter and a second supply powers the load, but the two supply-grounds cannot be tied together. '-DC4' models include a built-in dc/dc converter to provide a minimum 500Vdc isolation between the shunt (TB1) and power supply (TB2) inputs.

5. **Replacing Analog Panel Meters:** DCA-20PC ammeters can be used as replacements for analog panel meters if a suitable dc voltage is available for powering the ammeter. In retrofit applications, it is important to determine the shunt's electrical configuration (i.e., high or low side). If any doubt exists as to the shunt's location, use only '-DC4' isolated-supply models. All rewiring must be performed with the load and power supply de-energized.

6. **Operation With 36 to 75Vdc Power:** As shipped, all '-DC1' models' rated operating supply range is +5 to +40Vdc. However, '-DC1' models can be user configured for 36 to 75Vdc operation by removing (opening) jumper J3. Please note that this modification can only be performed on '-DC1' power models. Also, all '-DC1' models – including those that have been modified for 36-75Vdc operation – can only be connected in low-side, grounded-shunt applications. See Figure 3 for

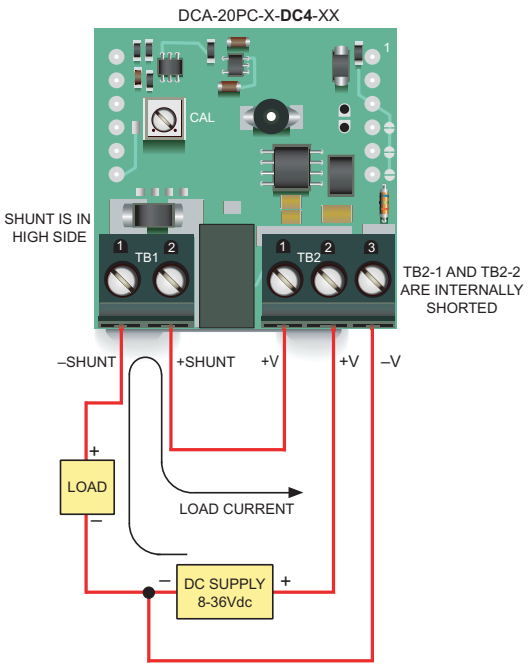


Figure 4. High-Side Shunt Connections for "-DC4" 8-36Vdc Isolated-Power Models

7. **Decimal Points:** DCA-20PC ammeters' decimal points are factory configured for the respective full-scale input range. However, the decimal points serve as placeholders only, they have no affect on the ammeter's displayed accuracy or resolution.

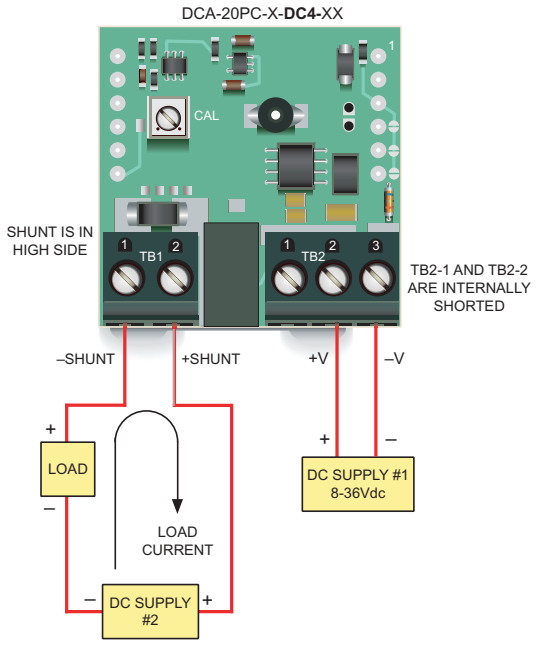


Figure 5. Using "-DC4" Isolated-Power Models to Maintain Isolation Between Two Power Supplies

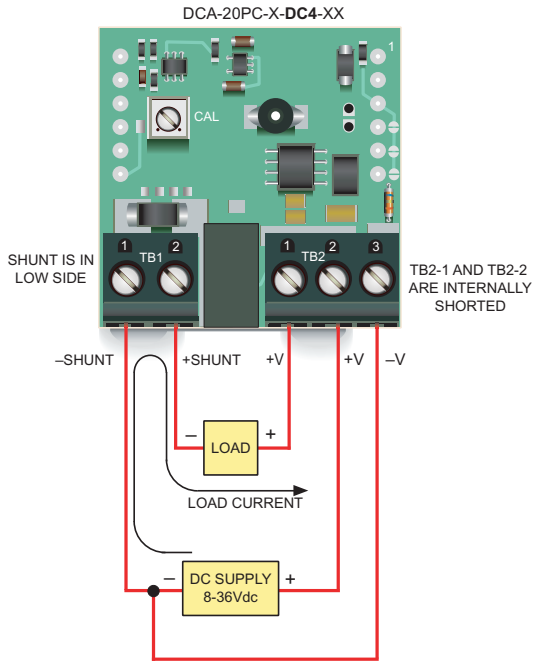


Figure 6. Using "-DC4" Isolated-Power Models in Low-Side Shunt Applications

## TECHNICAL NOTES

If desired, an alternative decimal point by can be enable by opening the factory closed solder gap and then closing one of the other two solder gaps. The closing of SG1, SG2, or SG3 selects DP1 ("1.XXX"), DP2 ("1X.XX"), or DP3 ("1XX.X"), respectively.

8. **Noisy Power Supplies:** Some power supplies contain high-frequency switching devices that may conduct and/or radiate significant noise onto the low-level signal developed across the internal shunt. Even though DCA-20PC ammeters incorporate built-in input filtering, some portion of this noise may be amplified and subsequently measured by its sensitive input circuitry. The amplified noise introduces errors that are particularly noticeable at zero load current (i.e., the ammeter may not display a relatively steady "000" reading).

   Connecting an external, unpolarized capacitor across TB1's -SHUNT and +SHUNT inputs can help reduce noise-related display errors. In certain situations, the use of twisted pair or shield wiring may be required. As a general rule, avoid using excessively long leads between the ammeter and the load.

9. **'Power ON' LED:** DCA-20PC ammeters include a rear-mounted 'Power On' LED. The bright illumination of this LED indicates that the meter's internal power converter is operational. It does not signify that the ammeter and the external load are connected correctly.

10. **Measuring positive and negative currents (bipolar operation)**: In applications where both positive and negative currents must be measured, Murata Power Solutions recommends using '-DC4' 8-36V isolated supply models. Negative current flow is denoted by the illumination of the display's negative (-) sign; the absence of a negative sign implies positive current flow. Contact Murata Power Solutions if you have any questions regarding bipolar operation of DCA-20PC ammeters. detailed wiring information. Any reconfiguration of J3 must be made prior to connecting the power supply and load to the ammeter.

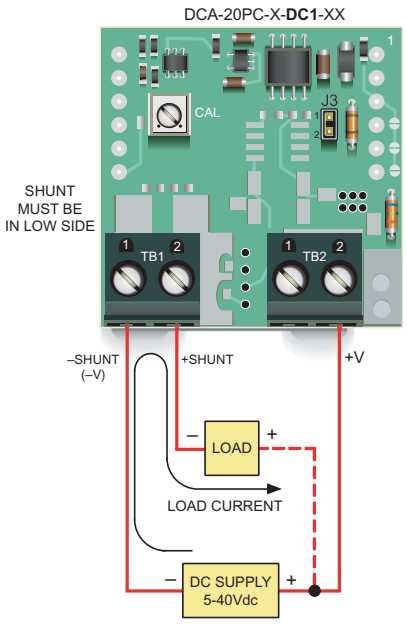


Figure 7. 3-Wire Connections for "-DC1" 5-40Vdc Powered Models

## PANEL INSTALLATION

**All connections and modifications must be made after the ammeter is securely attached to the panel, with all load and supply voltages de-energized (off).**

The installed wire-positions should be such that minimal forces are applied to TB1, TB2, and the ammeter itself. In high-vibration environments, the use of wiring strain-reliefs is recommended.

To insure a secure panel-mount installation, MPS recommends using the DMS-BZL4 (with sealing gasket) bezel assembly supplied with each ammeter. See the Mechanical Specifications section for detailed panel cutout and ammeter dimensions.

Following the four-step sequence shown in Figure 8 below, being careful not to apply excessive force or twisting motions, insert the ammeter into the panel opening. When using the DMS-BZL4's sealing gasket, make sure it is positioned between the ammeter's flange and the panel's front surface. Be sure to use and securely tighten all four screws supplied with the bezel assembly.

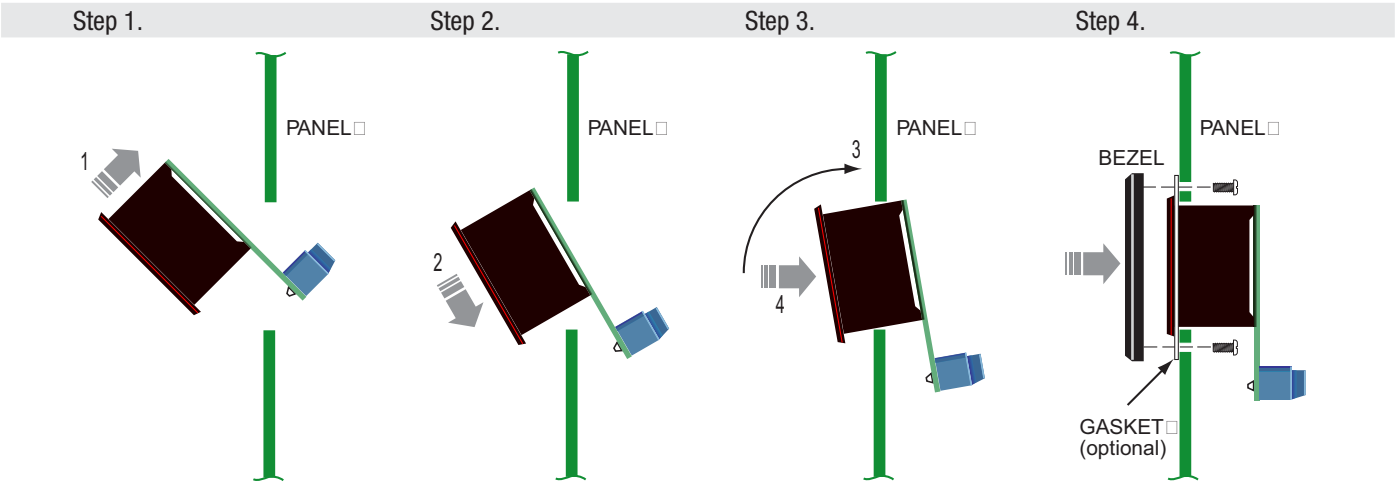


Figure 8. Panel Installation

## MECHANICAL SPECIFICATIONS

MECHANICAL DIMENSIONS: Inches (mm)
TOLERANCES: 2 PL DEC ±0.02 (±0.51)
3 PL DEC ±0.010 (±0.254)

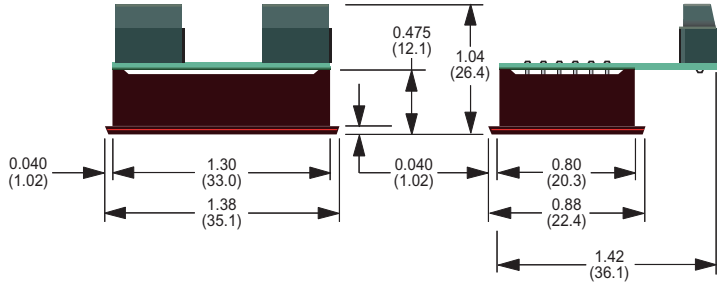


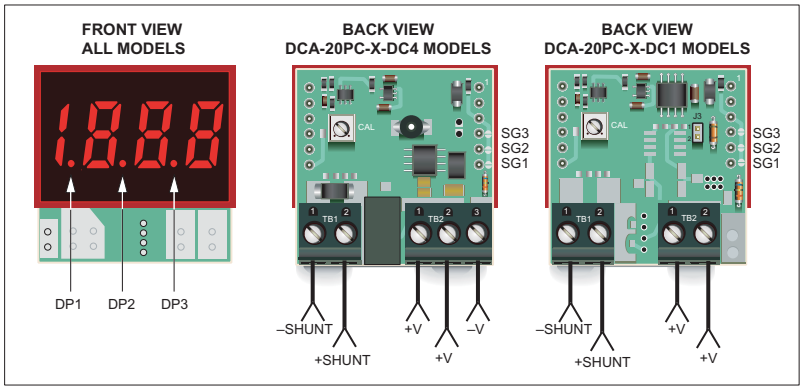


## BEZEL INSTALLATION AND RECOMMENDED DRILL AND PANEL CUTOUT

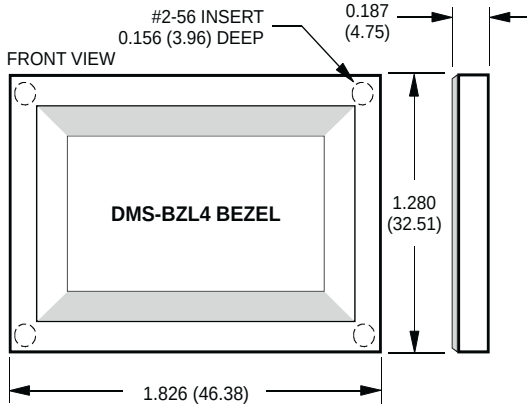


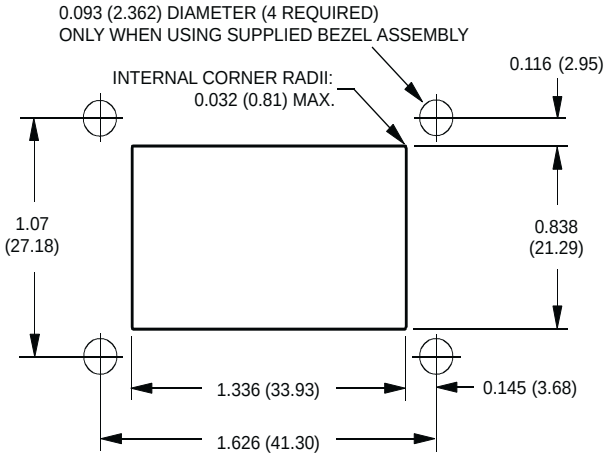


Murata Power Solutions, Inc.
11 Cabot Boulevard, Mansfield, MA 02048-1151 U.S.A.
ISO 9001 and 14001 REGISTERED

**This product is subject to the following operating requirements and the Life and Safety Critical Application Sales Policy:**
**Refer to: http://www.murata-ps.com/requirements/**

Murata Power Solutions, Inc. makes no representation that the use of its products in the circuits described herein, or the use of other technical information contained herein, will not infringe upon existing or future patent rights. The descriptions contained herein do not imply the granting of licenses to make, use, or sell equipment constructed in accordance therewith. Specifications are subject to change without notice.
*© 2015 Murata Power Solutions, Inc.*