Note: This datasheet may be out of date.
Please download the latest datasheet of DLW5ATZ111TQ2# from the official website of Murata Manufacturing Co., Ltd.

http://www.murata.com/en-us/products/productdetail?partno=DLW5ATZ111TQ2%23

DLW5ATZ111TQ2#

"#" indicates a package specification code.

In Production | AEC-Q200 | RoHS | REACH

< List of part numbers with package codes >

DLW5ATZ111TQ2B DLW5ATZ111TQ2K DLW5ATZ111TQ2L

Appearance & Shape



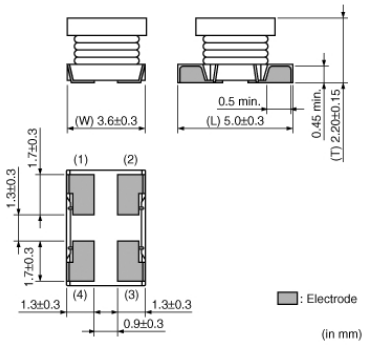

Packaging Information

Packaging	Specifications	Standard Packing Quantity
B	Bulk(Bag)	100
K	330mm Embossed Tape	2500
L	180mm Embossed Tape	700

Features

Low profile (h=2.35mm) chip common mode choke coil.
Suitable for noise suppression at DC power lines.

Features
1. Low profile (h=2.35mm)
2. Small size (5.0x3.6mm)
3 ·Large Current Available（1.5Ato 4A）
4 ·Operating Temperature Range：-40°C to +105°C

Applications

Automotive Usage	Infotainment

Attention
1.This datasheet is downloaded from the website of Murata Manufacturing Co., Ltd. Therefore, it's specifications are subject to change or our products in it may be discontinued without advance notice. Please check with our sales representatives or product engineers before ordering.
2.This datasheet has only typical specifications because there is no space for detailed specifications.
Therefore, please review our product specifications or consult the approval sheet for product specifications before ordering.

Note: This datasheet may be out of date.
Please download the latest datasheet of DLW5ATZ111TQ2# from the official website of Murata Manufacturing Co., Ltd.

http://www.murata.com/en-us/products/productdetail?partno=DLW5ATZ111TQ2%23

DLW5ATZ111TQ2#

"#" indicates a package specification code.

Specifications

Shape	SMD
Size Code (in mm)	5036
Size Code (in inch)	2014
Length	5.0mm
Length Tolerance	±0.3mm
Width	3.6mm
Width Tolerance	±0.3mm
Thickness	2.2mm
Thickness Tolerance	±0.15mm
Common Mode Impedance (at 100MHz)	110Ω
Common Mode Impedance (at 100MHz) Tolerance	(Typ.)
Common Mode Impedance (at 10MHz)	12Ω
Common Mode Impedance (at 10MHz) Tolerance	±25%
Rated Current	3A
Derating of Rated Current	No
Rated Voltage	100Vdc
Withstanding Voltage	250Vdc
DC Resistance(max.)	0.02Ω
DC Resistance	0.020Ω max.
Insulation Resistance(min.)	10MΩ
Operating Temperature Range	-40℃ to 105℃
Mass(typ.)	0.14g
Number of Circuit	1
Operating Temperature Range(Self-temperature rise is included)	No

Attention
1.This datasheet is downloaded from the website of Murata Manufacturing Co., Ltd. Therefore, it's specifications are subject to change or our products in it may be discontinued without advance notice. Please check with our sales representatives or product engineers before ordering.
2.This datasheet has only typical specifications because there is no space for detailed specifications.
Therefore, please review our product specifications or consult the approval sheet for product specifications before ordering.

Note: This datasheet may be out of date.
Please download the latest datasheet of DLW5ATZ111TQ2# from the official website of Murata Manufacturing Co., Ltd.

http://www.murata.com/en-us/products/productdetail?partno=DLW5ATZ111TQ2%23

DLW5ATZ111TQ2#

"#" indicates a package specification code.

Product Data

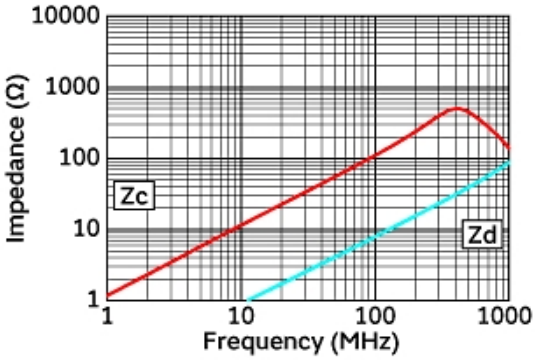

Impedance-Frequency Characteristics

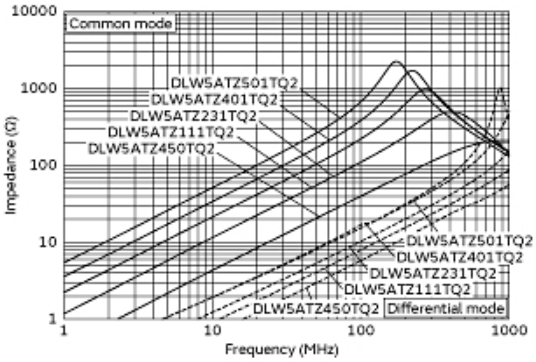

Impedance-Frequency Characteristics (Main Items)

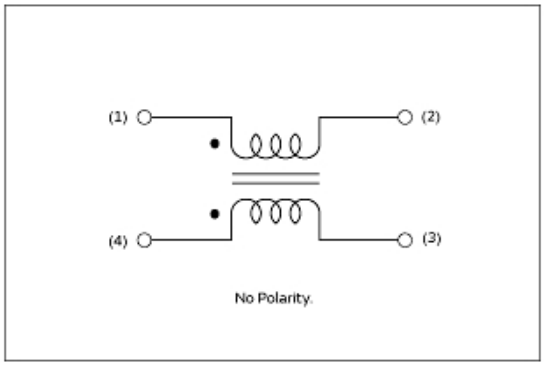

Equivalent Circuit

Attention
1.This datasheet is downloaded from the website of Murata Manufacturing Co., Ltd. Therefore, it's specifications are subject to change or our products in it may be discontinued without advance notice. Please check with our sales representatives or product engineers before ordering.
2.This datasheet has only typical specifications because there is no space for detailed specifications.
Therefore, please review our product specifications or consult the approval sheet for product specifications before ordering.