Note: This datasheet may be out of date.
Please download the latest datasheet of DLW5BTM501TQ2# from the official website of Murata Manufacturing Co., Ltd.

http://www.murata.com/en-us/products/productdetail?partno=DLW5BTM501TQ2%23

DLW5BTM501TQ2#

"#" indicates a package specification code.

In Production RoHS REACH

< List of part numbers with package codes >

DLW5BTM501TQ2B DLW5BTM501TQ2K DLW5BTM501TQ2L

Appearance & Shape



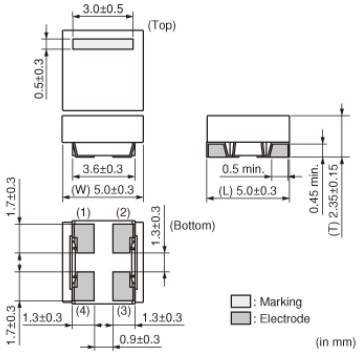

Packaging Information

Packaging	Specifications	Standard Packing Quantity
B	Bulk(Bag)	100
K	330mm Embossed Tape	2500
L	180mm Embossed Tape	700

Applications

Other Usage	For general

Attention
1.This datasheet is downloaded from the website of Murata Manufacturing Co., Ltd. Therefore, it's specifications are subject to change or our products in it may be discontinued without advance notice. Please check with our sales representatives or product engineers before ordering.
2.This datasheet has only typical specifications because there is no space for detailed specifications.
Therefore, please review our product specifications or consult the approval sheet for product specifications before ordering.

Note: This datasheet may be out of date.
Please download the latest datasheet of DLW5BTM501TQ2# from the official website of Murata Manufacturing Co., Ltd.

http://www.murata.com/en-us/products/productdetail?partno=DLW5BTM501TQ2%23

DLW5BTM501TQ2#

"#" indicates a package specification code.

Features

Features
1. Low profile (h=2.5mm)
2. Small size (5.0x5.0mm) and high rated current (2 to 6A)
3. High common mode Impedance (max. 1400 ohm, at 100MHz)
4 ·Operating Temperature Range -40°C to +105°C

Applications
Noise suppression for power line
1. Power line equipment
   -DC-DC converters
   -Battery chargers
2. Portable equipment
   -PDAs (Personal Digital Assistants)
   -Note PCs
   -Printers

Attention
1.This datasheet is downloaded from the website of Murata Manufacturing Co., Ltd. Therefore, it's specifications are subject to change or our products in it may be discontinued without advance notice. Please check with our sales representatives or product engineers before ordering.
2.This datasheet has only typical specifications because there is no space for detailed specifications.
Therefore, please review our product specifications or consult the approval sheet for product specifications before ordering.

Note: This datasheet may be out of date.
Please download the latest datasheet of DLW5BTM501TQ2# from the official website of Murata Manufacturing Co., Ltd.

http://www.murata.com/en-us/products/productdetail?partno=DLW5BTM501TQ2%23

DLW5BTM501TQ2#

"#" indicates a package specification code.

Specifications

Shape	SMD
Size Code (in mm)	5050
Size Code (in inch)	2020
Length	5.0mm
Length Tolerance	±0.3mm
Width	5.0mm
Width Tolerance	±0.3mm
Thickness	2.35mm
Thickness Tolerance	±0.15mm
Common Mode Impedance (at 100MHz)	500Ω
Common Mode Impedance (at 100MHz) Tolerance	(Typ.)
Common Mode Impedance (at 10MHz)	30Ω
Common Mode Impedance (at 10MHz) Tolerance	min.
Rated Current	4A
Derating of Rated Current	Yes (Over 85℃) *For details, please check the derating diagram.
Rated Voltage	100Vdc
Withstanding Voltage	250Vdc
DC Resistance(max.)	0.027Ω
DC Resistance	0.027Ω max.
Insulation Resistance(min.)	10MΩ
Operating Temperature Range	-40℃ to 105℃
Mass(typ.)	0.21g

Number of Circuit	1
Operating Temperature Range(Self-temperature rise is included)	No

Attention
1.This datasheet is downloaded from the website of Murata Manufacturing Co., Ltd. Therefore, it's specifications are subject to change or our products in it may be discontinued without advance notice. Please check with our sales representatives or product engineers before ordering.
2.This datasheet has only typical specifications because there is no space for detailed specifications.
Therefore, please review our product specifications or consult the approval sheet for product specifications before ordering.

Note: This datasheet may be out of date.
Please download the latest datasheet of DLW5BTM501TQ2# from the official website of Murata Manufacturing Co., Ltd.

http://www.murata.com/en-us/products/productdetail?partno=DLW5BTM501TQ2%23

DLW5BTM501TQ2#

"#" indicates a package specification code.

Product Data

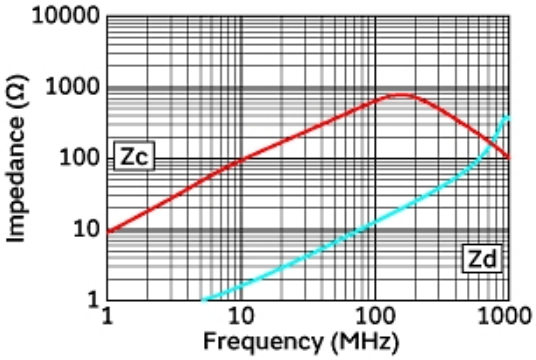

Impedance-Frequency Characteristics

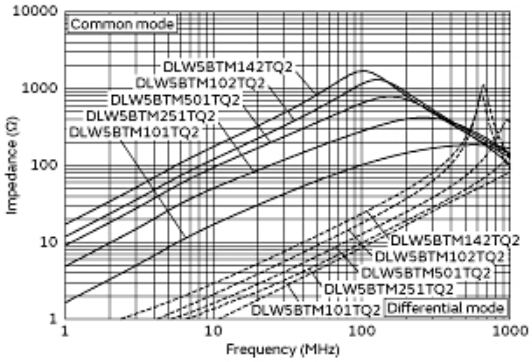

Impedance-Frequency Characteristics (Main Items)

In operating temperature exceeding +85°C, derating of current is necessary for DLW5BT series (105 degree C available type). Please apply the derating curve shown in chart according to the operating temperature.

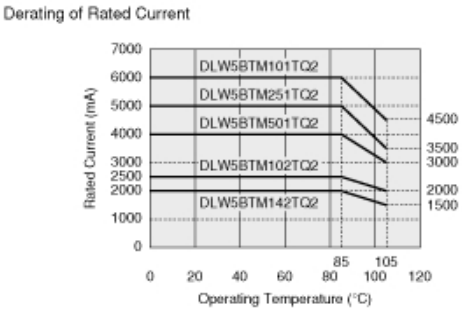

Derating of Rated Current

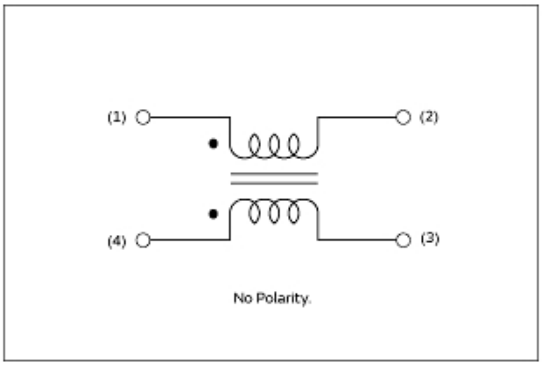

Equivalent Circuit

Attention
1.This datasheet is downloaded from the website of Murata Manufacturing Co., Ltd. Therefore, it's specifications are subject to change or our products in it may be discontinued without advance notice. Please check with our sales representatives or product engineers before ordering.
2.This datasheet has only typical specifications because there is no space for detailed specifications.
Therefore, please review our product specifications or consult the approval sheet for product specifications before ordering.