C30E.pdf
May 9,2016

muRata
INNOVATOR IN ELECTRONICS

EMI Suppression Filters (Lead Type EMIFIL®)



EU RoHS Compliant

- All the products in this catalog comply with EU RoHS.
- EU RoHS is "the European Directive 2011/65/EU on the Restriction of the Use of Certain Hazardous Substances in Electrical and Electronic Equipment."
- For more details, please refer to our website 'Murata's Approach for EU RoHS' (http://www.murata.com/en-eu/support/compliance/rohs).

Contents

Product specifications are as of January 2016.

EMIFIL®, EMIGUARD®,
"EMIFIL" and "EMIGUARD" in this catalog are
the trademarks of Murata Manufacturing Co., Ltd.

Product Guide / Effective Frequency Range ···· p2
Outline of EMI Suppression Filters (EMIFIL®)
for DC Line ····· p3

Ferrite Beads Inductors
Part Numbering ····· p7
BL01/02/03 Series ····· p8

Disc Type EMIFIL®
Part Numbering ····· p11
DSS1 Series ····· p12
Heavy-duty Type DSN9H/DST9H Series ···· p14

EMIGUARD® (EMIFIL® with Varistor Function)
Part Numbering ····· p16
VFC2H/VFR3V/VFS6V/VFS9V Series ····· p17
Noise Suppression Effect of VFR/VFS Series··· p21

Common Mode Choke Coils
Part Numbering ····· p25
PLT09H Series ····· p26

⚠Caution / Notice ····· p27
Soldering and Mounting ····· p28
Packaging ····· p30

Please check the MURATA website (**http://www.murata.com/**)
if you cannot find a part number in this catalog.

muRata

Product Guide/Effective Frequency Range

Type	Series	Effective Frequency Range 10kHz 100kHz 1MHz 10MHz 100MHz 1GHz 10GHz
Disc Type EMIFIL® **Ferrite Bead Inductor** 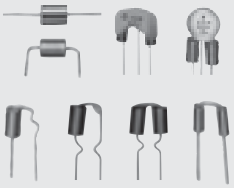	**BL01/02/03** **DSN9H** **DSS1** **DST9H**	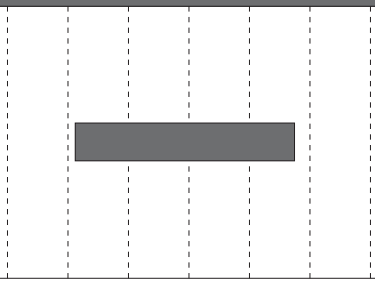
EMIGUARD® **(EMI Filters with varistor functions)** 	**VFC2H**	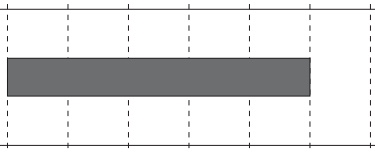
	**VFR3V** **VFS6V/9V**	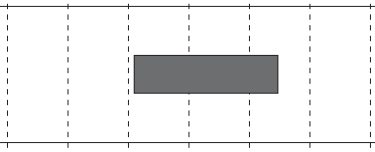
Common Mode Choke Coils 	**PLT09H**	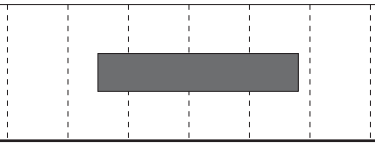

Outline of EMI Suppression Filters (EMIFIL®) for DC Line

●Ferrite Bead Inductor

Ferrite Bead Inductor ·····p.8–10

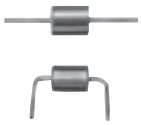

BL01



BL02RN1



BL02RN2



BL03RN2

Outline

- Ferrite Bead Inductors are effective for frequencies ranging from a few MHz to a few GHz. Ferrite Bead Inductors are widely used as a low noise countermeasure, as well as a universal noise suppression component.
- Ferrite Bead Inductors produce a micro inductance in a low frequency range. At high frequencies, however, the resistive component of the inductor produces the primary impedance. When inserted in series in the noise producing circuit, the resistive impedance of the inductor prevents noise propagation.

Equivalent Circuit

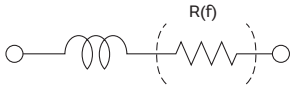

Impedance - Frequency Characteristics (typical)

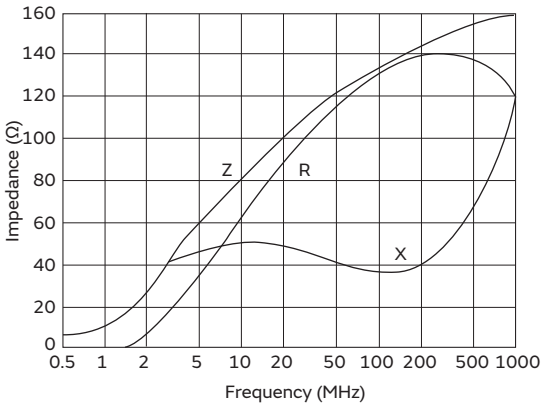

R: Real Part (Resistive Portion) X: Imaginary Part (Inductive Portion)

Outline of EMI Suppression Filters (EMIFIL®) for DC Line

●Disc Type EMIFIL®

Disc Type EMIFIL® ·····p.12–15



DSS1

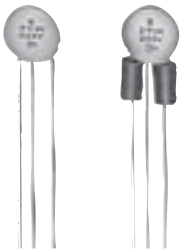

DS□9H

Outline

- This capacitor type EMI suppression filter has a large noise suppression effect at frequencies ranging from a few MHz to hundreds of MHz. This type of filter is used widely as a universal, high performance EMI suppression component.
- Three-terminal construction reduces residual inductance, thereby substantially improving noise suppression at frequencies over 10MHz.

Outline of EMI Suppression Filters (EMIFIL®) for DC Line

●EMIGUARD®

EMIGUARD® ·····p.17–24

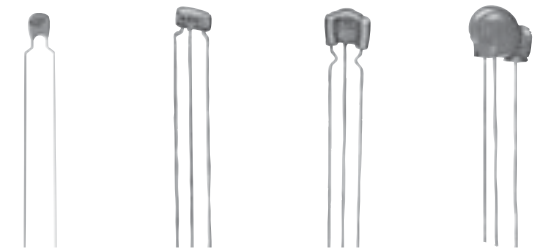

VFC2H　VFR3V　VFS6V　VFS9V

Outline

- EMIGUARD® eliminates both surge noise and EMI noise applying some unique design like the use of dielectric varistor material to a 3 terminal capacitor.
- Effective when high frequency noise and high voltage surge suppression are required, and also in situations when surging starts at extremely high speeds. This type of surging cannot be eliminated with general type varistors.

Construction of EMIGUARD® (VFS9V)

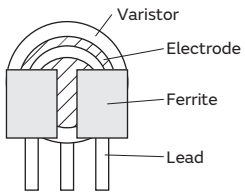

Surge Absorption Effect of EMIGUARD®

Type of Filter	Surge Absorption Effect of EMIGUARD®
No filter	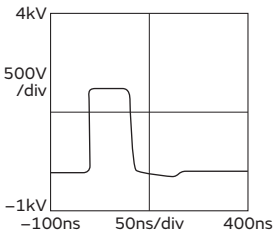
Three-terminal capacitor is used to suppress the surge.	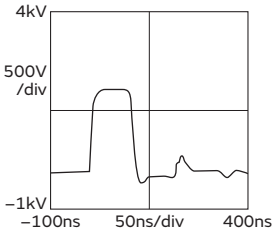
EMIGUARD® is used to suppress the surge. (VFS6V)	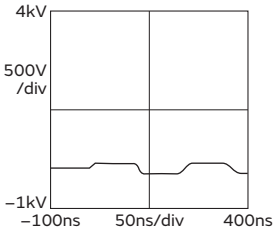

Outline of EMI Suppression Filters (EMIFIL®) for DC Line

●Common Mode Choke Coil

Common Mode Choke Coil ·····p.26



PLT09H

Outline

● These choke coils reduce common mode noise, which causes problems on balanced transmission lines, and are effective against common mode noise in the several MHz to several 100MHz frequency range.
They are ideally suited for noise suppression on DC power supply lines and interface cables.

Construction of Common Mode Choke Coil

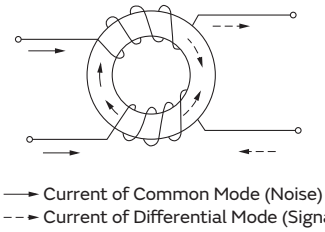

Equivalent Circuit

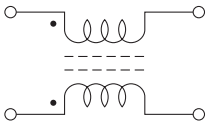

EMI Suppression Filters (Lead Type EMIFIL®)

Ferrite Beads Inductors Part Numbering

Ferrite Beads Inductors

(Part Number) BL 02 RN 2 R1 M 2 B
❶ ❷ ❸ ❹ ❺ ❻ ❼ ❽

❶Product ID

Product ID	
BL	Ferrite Beads Inductors

❷Series

Code	Series
01	Beads ø3.6
02	Beads ø3.4
03	Beads ø2.3 max.

❸Beads Core Material

Code	Beads Core Material
RN	Standard Type

❹Numbers of Beads Core

Code	Numbers of Beads Core
1	1
2	2

❺Lead Type

Code	Lead Type	Series
A1	Axial Straight Type	BL01
A2	Axial Crimp Type	BL01
R1	Radial Straight Type	BL02/BL03
R2	Radial Straight and Wave Formed Leads Type	BL02
R3	Radial Incrimp Type	BL02

❻Lead Length, Space

Code	Lead Length, Space	Series
A	Bulk, Axial Type, 3.7mm	BL01
D	Bulk, Axial Type, 45.0mm	
E	Taping, Axial Type, 26.0mm	
F	Taping, Axial Type, 52.0mm	
J	Bulk, Radial Type, 5.0mm	BL02/BL03
M	Bulk, Radial Type, 10.0mm	
N	Taping, Radial Type, 16.5mm	
P	Taping, Radial Type, 18.5mm	
Q	Taping, Radial Type, 20.0mm	

❼Lead Diameter

Code	Lead Diameter
1	ø0.60mm
2	ø0.65mm

❽Packaging

Code	Packaging	Series
A	Ammo Pack	BL01/BL02/BL03
B	Bulk	All Series

EMI Suppression Filters (Lead Type EMIFIL®)

Ferrite Beads Inductors BL01/02/03 Series

Features

BL01/02/03 series are ferrite beads with lead wires to produce a high frequency loss for suppression of noise. Simple construction and easy-to-use, effective for low impedance circuits such as power supplies and grounds. Effective also for preventing overshoot and undershoot of digital signal in clocks or the like, and suppressing the higher harmonic wave. Suitable for prevention of abnormal oscillation at high frequency amplifying circuit.

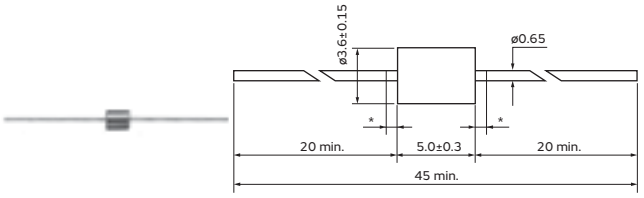

*Coating extending on leads : 1.5 max.

BL01RN1A1D2B

(in mm)



BL01RN1A2A2B

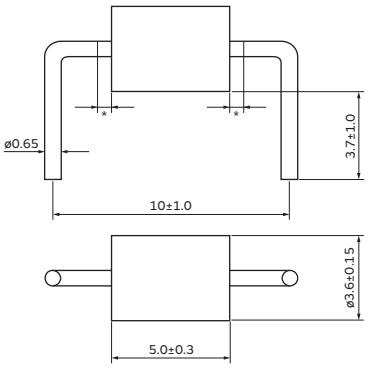

*Coating extending on leads : 1.5 max. (in mm)



BL02RN1R2M2B

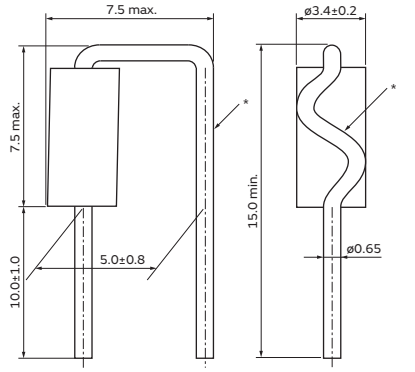

*There is excess bond stick on the wire. (in mm)



BL02RN1R3J2B

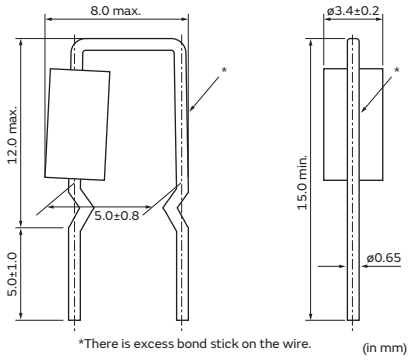

*There is excess bond stick on the wire. (in mm)



BL02RN2R1M2B

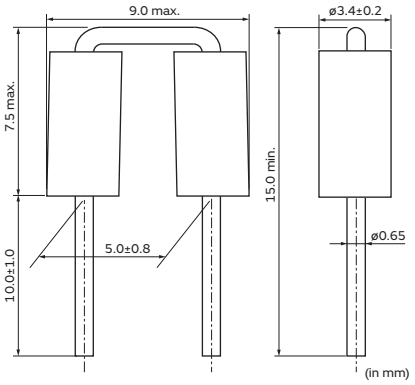

(in mm)



BL02RN2R3J2B

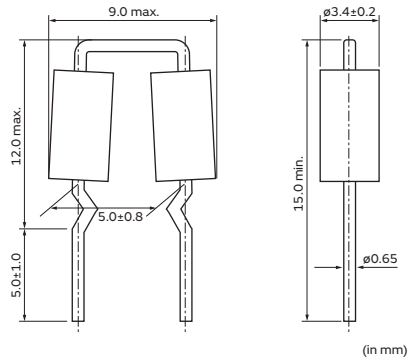

(in mm)



BL03RN2R1M1B

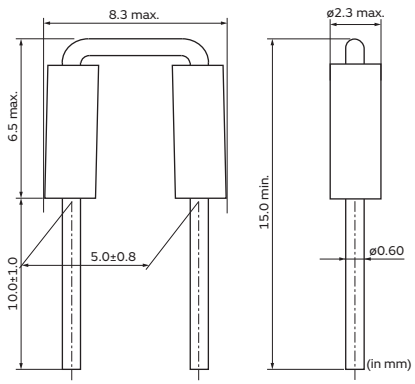

(in mm)

BL01/BL02/BL03 Series

Part Number	Rated Current (A)	Operating Temperature Range
BL01RN1A1D2B	7	-40 to +85°C
BL01RN1A1E1A	6	-40 to +85°C
BL01RN1A1F1A	6	-40 to +85°C
BL01RN1A2A2B	7	-40 to +85°C
BL02RN1R2M2B	7	-40 to +85°C
BL02RN1R2N1A	6	-40 to +85°C
BL02RN1R2P1A	6	-40 to +85°C
BL02RN1R2Q1A	6	-40 to +85°C
BL02RN1R3J2B	7	-40 to +85°C
BL02RN1R3N1A	6	-40 to +85°C
BL02RN2R1M2B	7	-40 to +85°C
BL02RN2R1N1A	6	-40 to +85°C
BL02RN2R1P1A	6	-40 to +85°C
BL02RN2R1Q1A	6	-40 to +85°C
BL02RN2R3J2B	7	-40 to +85°C
BL02RN2R3N1A	6	-40 to +85°C
BL03RN2R1M1B	6	-40 to +85°C
BL03RN2R1N1A	6	-40 to +85°C
BL03RN2R1P1A	6	-40 to +85°C
BL03RN2R1Q1A	6	-40 to +85°C

Please refer to p.30, "Packaging" for Dimensions of Part Numbers Except for 'B' for the last code.

Equivalent Circuit

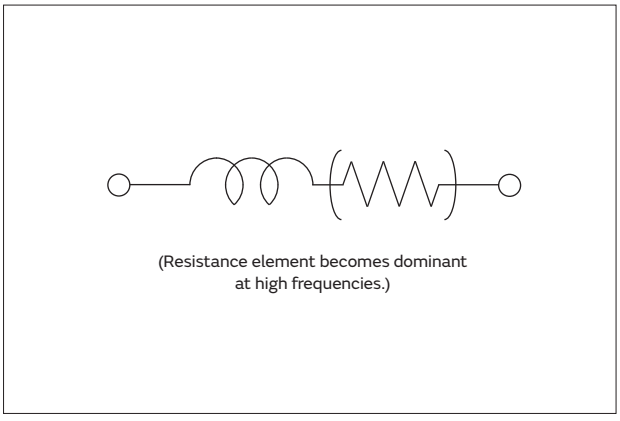

(Resistance element becomes dominant at high frequencies.)

Impedance - Frequency Characteristics

BL01RN1

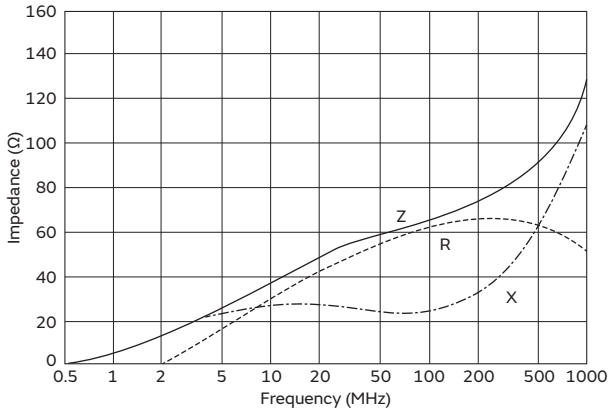

BL02RN1

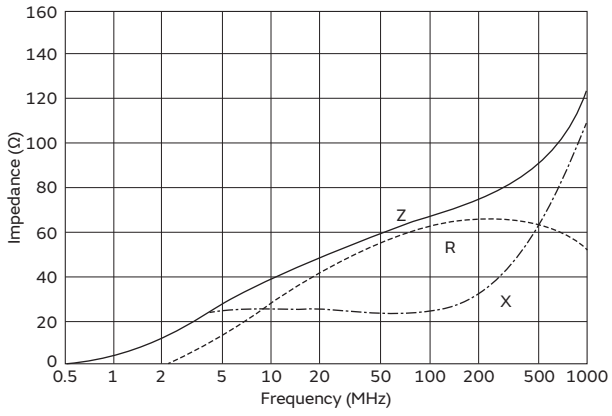

Continued on the following page. ↗

Continued from the preceding page.↘

Impedance - Frequency Characteristics

BL02RN2

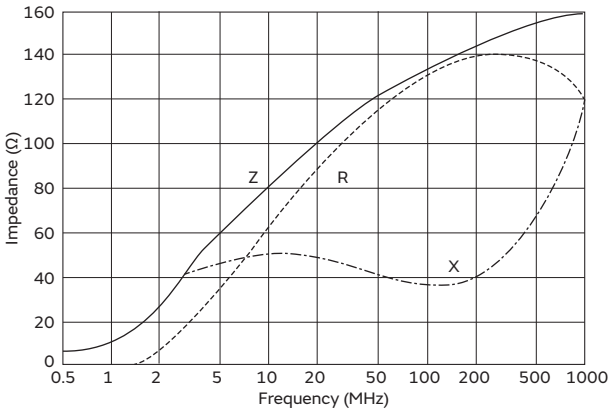

BL03RN2

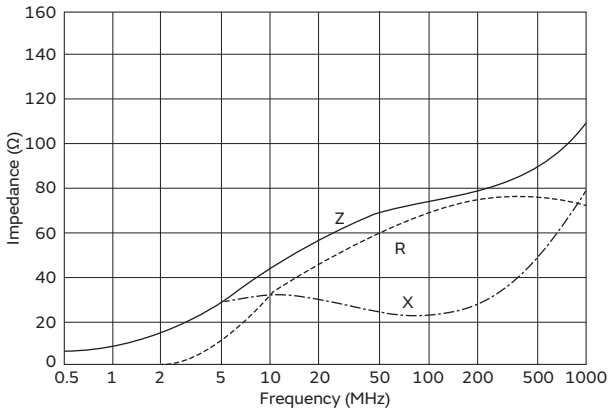

EMI Suppression Filters (Lead Type EMIFIL®)

Disc Type EMIFIL® Part Numbering

Disc Type EMIFIL®

(Part Number)

DS	N	9	H	B3	2E	101	Q92	A
❶	❷	❸	❹	❺	❻	❼	❽	❾

❶Product ID

Product ID	
DS	Three-terminal Capacitor

❷Structure

Code	Structure
N	No Ferrite Beads Type
S	Built-in Ferrite Beads Type
T	with Ferrite Beads Type

❸Style

Code	Style
1	Expressed by a letter.
9	

❹Category

Code	Category
N	for General Use
H	for Heavy-duty

❺Temperature Characteristics

Code	Capacitance Change
B3	±10% (Temperature Range: -25˚C to +85˚C)

❻Rated Voltage

Code	Rated Voltage
1H	50V
2A	100V
2E	250V

❼Capacitance

Expressed by three alphanumerics. The unit is in pico-farad (pF). The first and second figures are significant digits, and the third figure expresses the number of zeros that follow the two figures.

❽Lead Type/❾Packaging

Code	Lead Type	Lead Length* (mm)	Packaging	Series
Q55B	Straight	25.0 min.	Bulk	All series
Q50B		4.0±0.5		**DST9H**
Q91A		20.0±1.0	Ammo Pack	**DSN9H**, **DSS1N**
Q92A		16.5±1.0		**DS□9H**
Q93A		18.5±1.0		

*Lead Distance between Reference and Bottom Planes Except for Bulk.

EMI Suppression Filters (Lead Type EMIFIL®)

Disc Type EMIFIL® DSS1 Series

Features

DSS1 series is a compact, high performance lead type 3 terminal capacitor which can be mounted in 2.54mm pitch.
Its three terminal structure enables nice high frequency performance.
Wide capacitance variation enables flexible selection for various noise frequencies.
High speed mounting is available with automatic insertion machine.



DSS1_Q55B Series

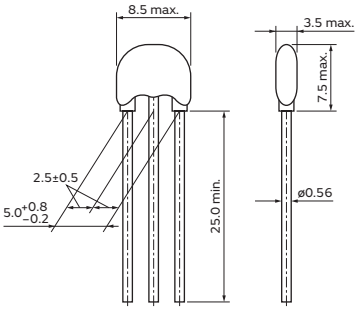

(in mm)

Built-in Ferrite Beads DSS1 Series

Part Number	Capacitance (pF)	Rated Voltage (Vdc)	Rated Current (A)	Operating Temperature Range
DSS1NB32A220	22 ±10%	100	6	-40 to +85°C
DSS1NB32A330	33 ±10%	100	6	-40 to +85°C
DSS1NB32A470	47 ±10%	100	6	-40 to +85°C
DSS1NB32A680	68 ±10%	100	6	-40 to +85°C
DSS1NB32A101	100 ±10%	100	6	-40 to +85°C
DSS1NB32A121	120 ±10%	100	6	-40 to +85°C
DSS1NB32A151	150 ±10%	100	6	-40 to +85°C
DSS1NB32A221	220 ±10%	100	6	-40 to +85°C
DSS1NB32A271	270 ±10%	100	6	-40 to +85°C
DSS1NB32A331	330 ±10%	100	6	-40 to +85°C
DSS1NB32A471	470 ±10%	100	6	-40 to +85°C
DSS1NB32A681	680 ±10%	100	6	-40 to +85°C
DSS1NB32A102	1000 ±10%	100	6	-40 to +85°C
DSS1NB32A152	1500 ±10%	100	6	-40 to +85°C
DSS1NB32A222	2200 ±10%	100	6	-40 to +85°C
DSS1NB32A332	3300 ±10%	100	6	-40 to +85°C
DSS1NB32A472	4700 ±10%	100	6	-40 to +85°C
DSS1NB32A682	6800 ±10%	100	6	-40 to +85°C
DSS1NB32A103	10000 ±10%	100	6	-40 to +85°C
DSS1NB32A153	15000 ±10%	100	6	-40 to +85°C
DSS1NB32A223	22000 ±10%	100	6	-40 to +85°C
DSS1NB31H333	33000 ±10%	50	6	-40 to +85°C
DSS1NB31H473	47000 ±10%	50	6	-40 to +85°C
DSS1NB31H104	100000 ±10%	50	6	-40 to +85°C

Please refer to Part Numbering for Type and Length of Lead.

Equivalent Circuit

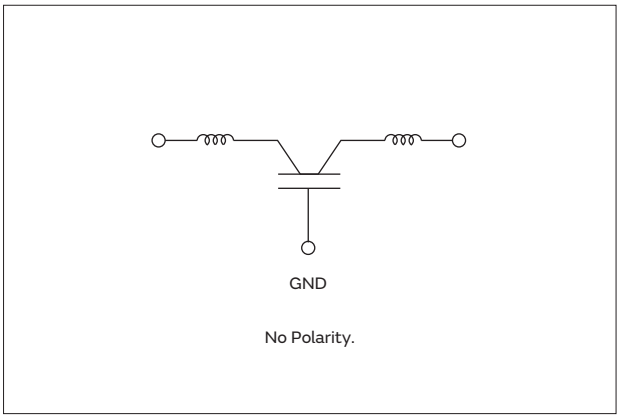

Insertion Loss Characteristics

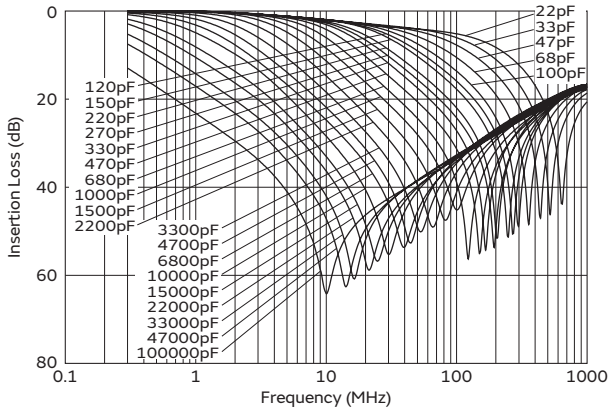

EMI Suppression Filters (Lead Type EMIFIL®)

Disc Type EMIFIL® Heavy-duty Type DSN9H/DST9H Series

Features

DS_9H is a basic type EMI suppression filter which can obtain high insertion loss in a wide frequency range.
Its three terminal structure enables nice high frequency performance. High rated voltage of 250Vdc and wide operating temperature range from -40 degrees C to 105 degrees C are suitable for high reliability circuits.



DSN9H_Q55B

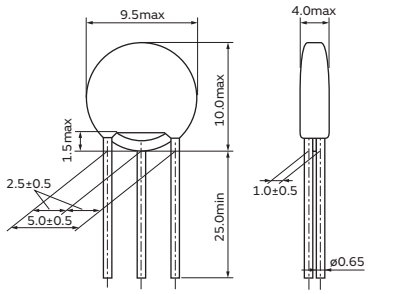

(in mm)

Supplement

Diameter of lead is 0.6mm for taping type.
Taping type is three terminal in-line arrangement.



DST9H_Q55B

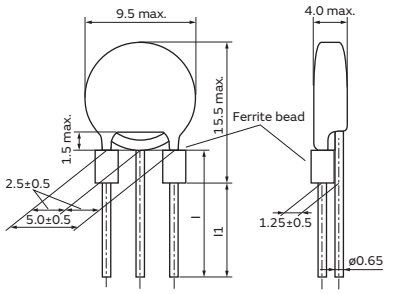

Q55 Type: l = 25.0 min.
Q50 Type: l1 = 4.0±0.5

(in mm)

DSN9H Series

Part Number	Capacitance (pF)	Rated Voltage (Vdc)	Rated Current (A)	Operating Temperature Range
DSN9HB32E220	22 ±20%	250	6	-40 to +105°C
DSN9HB32E101	100 ±20%	250	6	-40 to +105°C
DSN9HB32E271	270 ±20%	250	6	-40 to +105°C
DSN9HB32E222	2200 ±20%	250	6	-40 to +105°C

Please refer to Part Numbering for Type and Length of Lead.

Equivalent Circuit

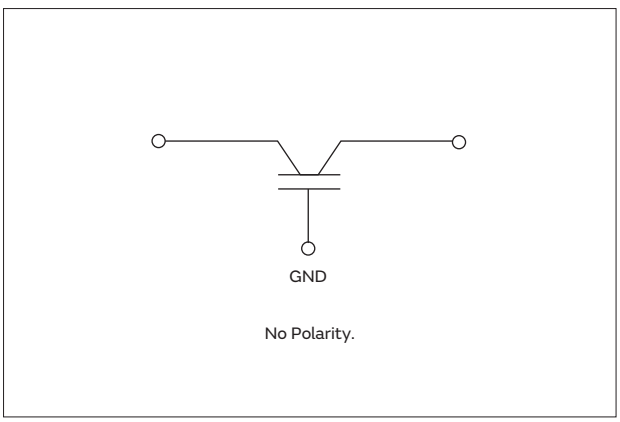

Insertion Loss Characteristics

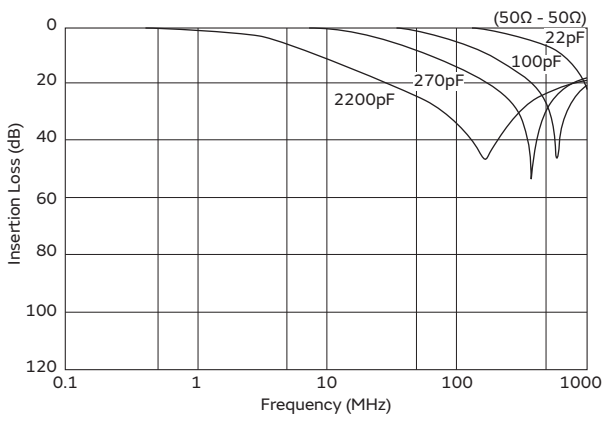

With Ferrite Beads DST9H Series

Part Number	Capacitance (pF)	Rated Voltage (Vdc)	Rated Current (A)	Operating Temperature Range
DST9HB32E220	22 ±20%	250	6	-40 to +105°C
DST9HB32E101	100 ±20%	250	6	-40 to +105°C
DST9HB32E271	270 ±20%	250	6	-40 to +105°C
DST9HB32E222	2200 ±20%	250	6	-40 to +105°C

Please refer to Part Numbering for Type and Length of Lead.

Equivalent Circuit

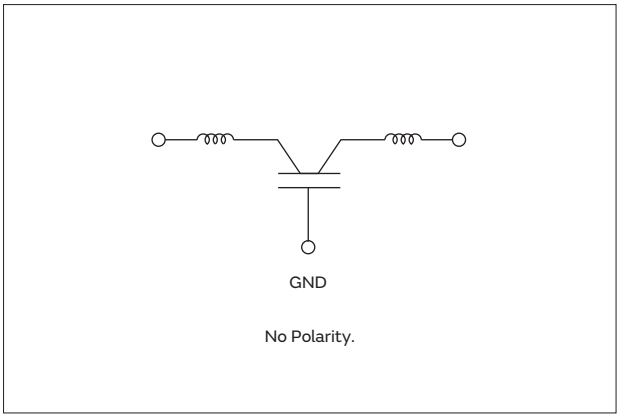

Insertion Loss Characteristics

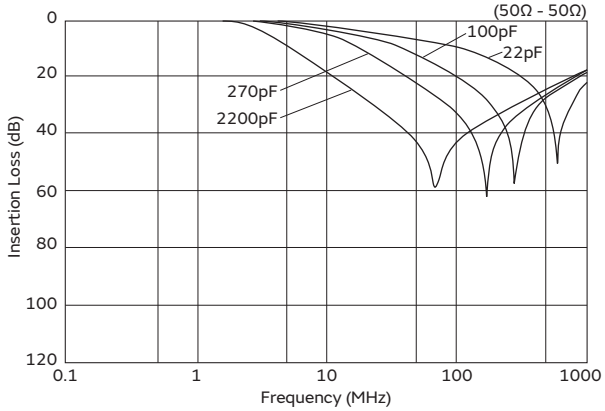

EMI Suppression Filters (Lead Type EMIFIL®)

EMIGUARD® (EMIFIL® with Varistor Function) Part Numbering

EMIGUARD® (EMIFIL® with Varistor Function)

(Part Number)

❶	❷	❸	❹	❺	❻	❼			❿	⓫
VF	S	6	V	D8	1E	221			T51	B
VF	C	2	H	R7	1D	105	K	2	T51	B

❶Product ID

Product ID	
VF	EMIGUARD® Lead Type

❷Structure

Code	Structure
S	Built-in Ferrite Beads Type
R	with Resistance
C	Built-in Capacitor

❸Style

Code	Style
2	Size is expressed by a digit
3	
6	
9	

❹Features

Code	Features
V	with Varistor Function
H	with Varistor Function (for Automotive)

❺Temperature Characteristics

Code	Capacitance Change
D8	+20/-30% (Temperature Range: -40˚C to +105˚C)
D3	+20/-30% (Temperature Range: -25˚C to +85˚C)
R7	±15% (Temperature Range: -55˚C to +125˚C)

❻Rated Voltage

Code	Rated Voltage
1B	12V
1D	22V
1E	25V

❼Capacitance

Expressed by three alphanumerics. The unit is in pico-farad (pF). The first and second figures are significant digits, and the third figure expresses the number of zeros that follow the two figures.

❽Capacitance

Code	Capacitance
K	±10%

❾Varistor Voltage

Code	Varistor Voltage
2	27V

❿Lead Type/⓫Packaging

Code	Lead Type	Lead Length*	Packaging	Series
T51B	Incrimp	25.0mm min.	Bulk	VFR3/VFS6
U31A		18.5±1.0mm	Ammo Pack	
Q55B	Straight	25.0mm min.	Bulk	VFS9
Q91J		20.0±1.0mm	Paper Reel (ø320mm)	
Q92J		16.5±1.0mm		
Q93J		18.5±1.0mm		

*Lead Distance between Reference and Bottom Planes Except for Bulk.

Code	Lead Type	Lead Length*	Packaging	Series
K1B	Inside Crimp	26.0±1.0mm	Bulk	VFC2
M1A		18.0±1.0mm	Ammo Pack	
M1J			Paper Reel (ø320mm)	

*From bottom of the crimp.

EMI Suppression Filters (Lead Type EMIFIL®)

EMIGUARD® (EMIFIL® with Varistor Function) VFC2H/VFR3V/VFS6V/VFS9V Series

VFC2H Series

VFC2H series is EMI suppression filters of lead type that combines the varistor and capacitor.

Features

1. Suitable for absorbing surge voltages occurred from inductive load of motors, relays, etc.
2. High maximum energy
3. Smaller size, High capacitance
4. Taping is capable of fast implementation of automatic insertion.



VFC2H Series

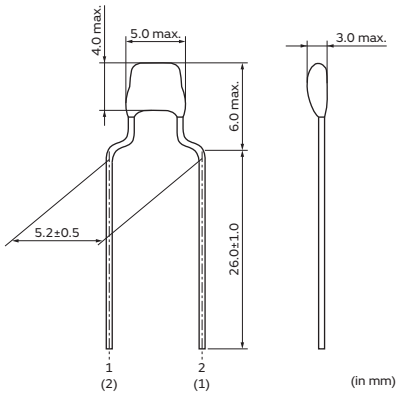

Part Number	Varistor Voltage (Vdc)	Capacitance (μF)	Temperature Characteristics	Rated Voltage (Vdc)	Rated Current	Insulation Resistance (min.) (M ohm)	Operating Temperature Range
VFC2HR71D105K2	27 +5/-3V	1.0 ±10%	R7 (±15%)	22	-	1	-55 to 125°C

Please refer to Part Numbering for Type and Length of Lead.

Equivalent Circuit

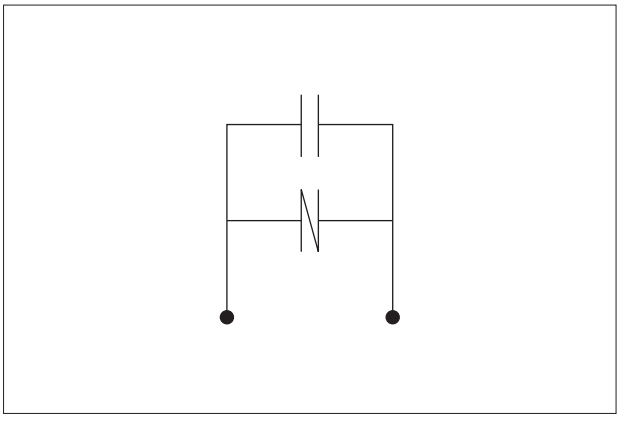

Semiconductor Protection VFR3V Series

Features

VFR3V series is designed for ESD surge protection of IC. It efficiently absorbs ESD surges rushed into IC's I/O terminal.

Applications

Elimination of noise and protection of semiconductors in office equipment, including computers and peripheral equipment, copy machines, and communication terminals.



VFR3V Series

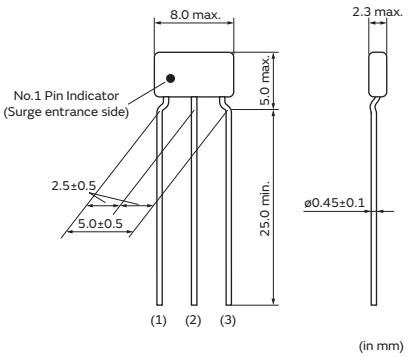

(in mm)

Part Number	Varistor Voltage (Vdc)	Capacitance (pF)	Rated Voltage (Vdc)	Rated Current (mA)	Peak Pulse Current (A)	Operating Temperature Range
VFR3VD31E131	50 ±20%	130 ±20%	25	20	30	-25 to 85°C

Please refer to Part Numbering for Type and Length of Lead.

Insertion Loss Characteristics

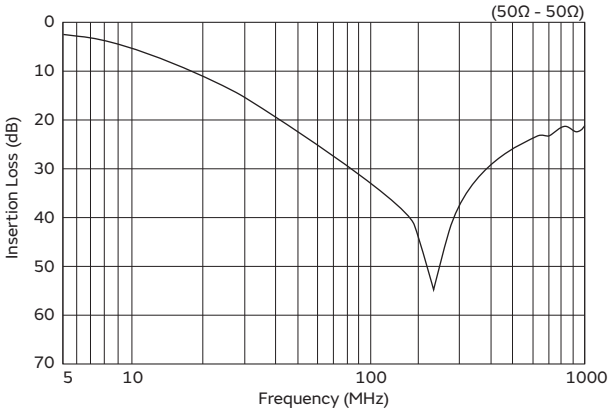

muRata

Signal Line VFS6V Series

Features

VFS6V series is designed for surge protection of signal line. It protects electric circuit from surges such as static electricity and suppresses EMI noise. Built-in ferrite bead gives excellent EMI suppression.

Applications

Elimination of noise and protection of electric circuits in office equipment, including computers and peripheral equipment, copy machines, and communication terminals.



VFS6V Series

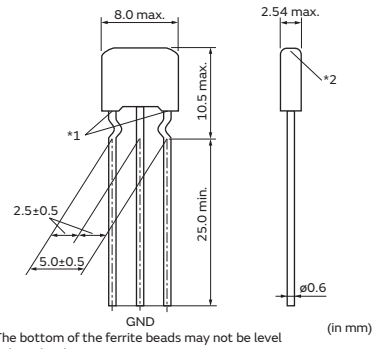

(in mm)

*1 The bottom of the ferrite beads may not be level with each other.
*2 There may be a hole on the top of ferrite beads, which causes no characteristics deterioration.

Part Number	Varistor Voltage (Vdc)	Capacitance (pF)	Rated Voltage (Vdc)	Rated Current (A)	Peak Pulse Current (A)	Operating Temperature Range
VFS6VD81E221	50 ±20%	220 ±20%	25	6	100	-40 to 105°C

Please refer to Part Numbering for Type and Length of Lead.

Equivalent Circuit

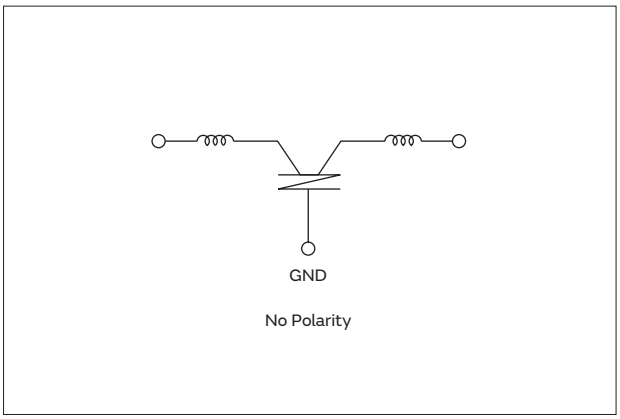

Insertion Loss Characteristics

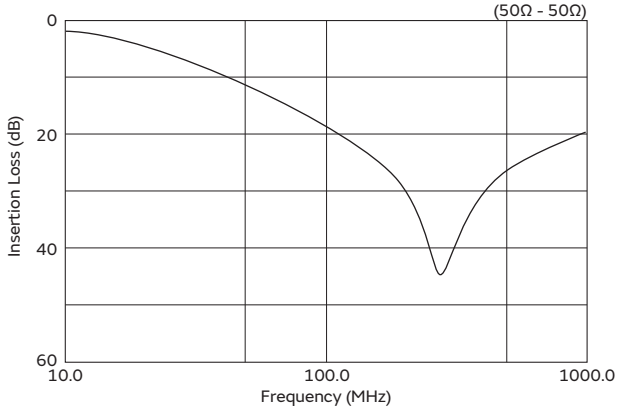

Large Current VFS9V Series

Features

VFS9V series is designed for surge protection of the power supply. It protects electric circuits from surge such as static electricity and suppresses EMI noise. Its large capacitance value enables high insertion loss for EMI noise.

Applications

For circuit protection and noise suppression in electronics equipment such as computers and DC motors, and in electronics systems installed in cars such as car audio equipment and engine controllers.



VFS9V Series

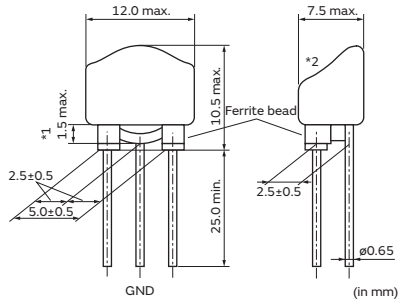

*1 Coating extending on leads does not exceed the tangent line. Exposed electrode, if any, is covered by solder, etc.
*2 If there is a hole in the top of the filter, the ferrite bead should not be exposed.

Part Number	Varistor Voltage (Vdc)	Capacitance (pF)	Rated Voltage (Vdc)	Rated Current (A)	Operating Temperature Range
VFS9VD31B223	22 ±20%	22000 +50/-20%	12	7	-40 to 100°C

Rated current is 7A for bulk type and 6A for taping type.
Rated current of taping type is 6A because the diameter of the lead is 0.6mm and its lead layout is the in-line type.
Please refer to Part Numbering for Type and Length of Lead.

Equivalent Circuit

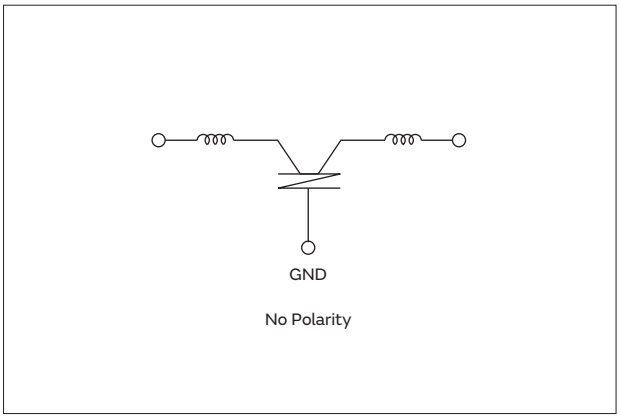

Insertion Loss Characteristics

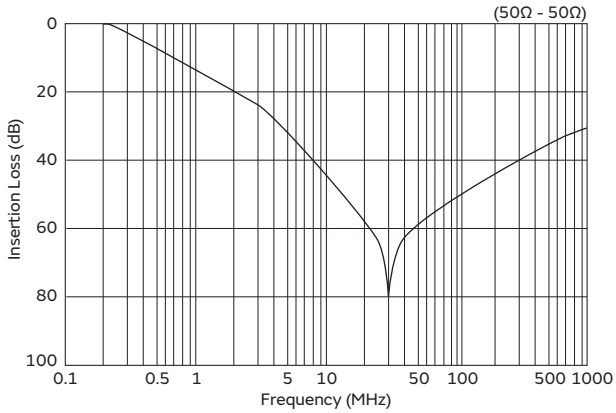

Voltage - Current Characteristics

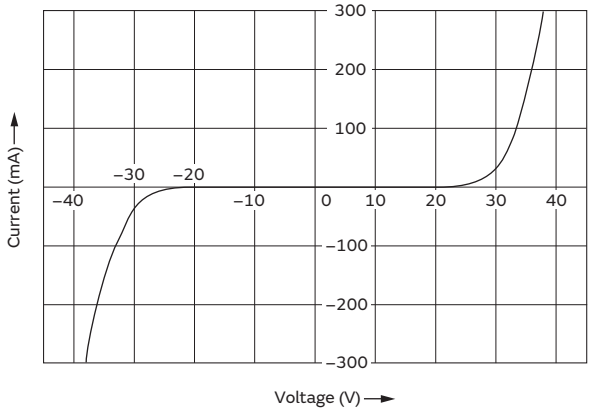

Noise Suppression Effect of VFR/VFS Series

Example of IC Protection (VFR3V)

● Testing Method

1. Put ESD surge to IC (7404 family) input terminal with ESD simulator based on IEC 801-2.
2. Check IC's operation.
3. If IC's operation is normal, increase ESD voltage in 1kV steps.
4. Continue above steps 1 to 3 till IC's operation becomes abnormal.

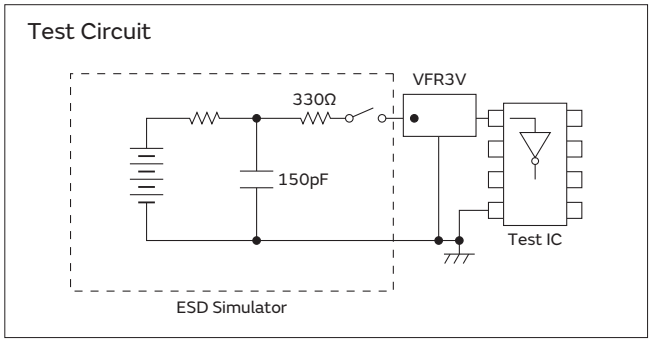

● Result

Varistor VFR3V can protect IC from ESD.

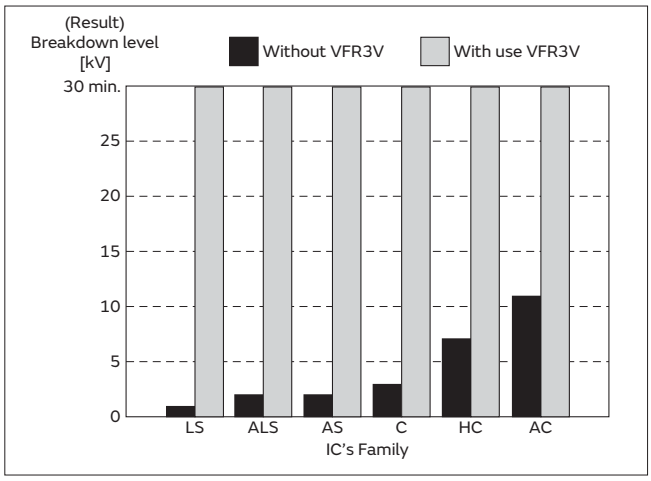

Example of EMI Suppression Effect

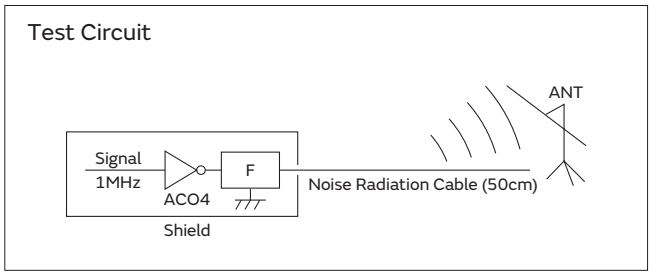

Type of Filter	EMI Suppression Effect
Before Countermeasures (No Filters)	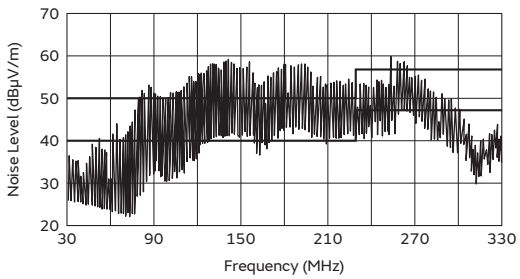
Using VFR3VD31E131T51	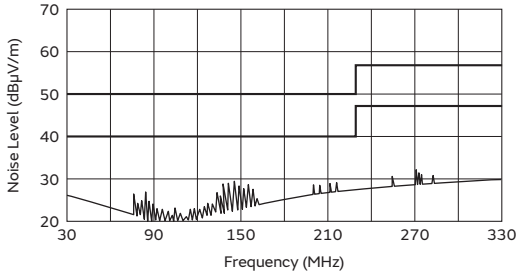

Noise Suppression Effect of VFR/VFS Series

Features (VFS9V)

Items	Test methods	Rated values
Overload	1.4 times the varistor voltage (V_1) is applied for 5 minutes at room temperature.	
Surge Test (1)	At room temperature, Surges are applied 10^5 times every 2 seconds. Then after 1 or 2 hours, the sample is measured. 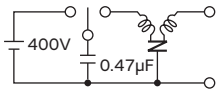	
Surge Test (2)	At room temperature, the capacitor "C" is charged with 70V, then discharged to apply the voltage to the sample. Tested once (resuming JASO A-1). 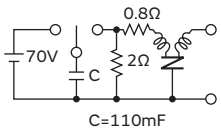	
High Temperature Load	At a temperature of 85±3°C, the varistor voltage V_1 is continuously applied to the sample for 1000 to 1024 hours. Then it is left at room temperature, for 4 to 24 hours before measuring.	

Items	Specifications
Rated Capacitance Change	Within±15%
Insulation Resistance	500kΩ min.
Rated of Change in Varistor Voltage V_1*	Within±15%
Voltage Rate	1.30 max.

*V_1: Voltage when 1mA is applied

Pulse-Voltage Breakdown Characteristic (VFS9V)

VFS9V EMIGUARD® use a self healing varistor- capacitor, so that it can be used under a 500 to 600V surge that would break conventional disc type EMI filters. As shown in the figure below EMIGUARD® withstands 2000V impulses applied 1000 times.

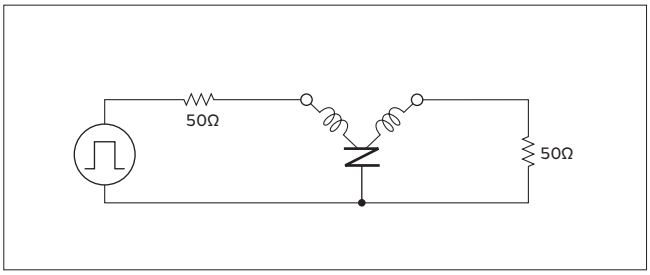

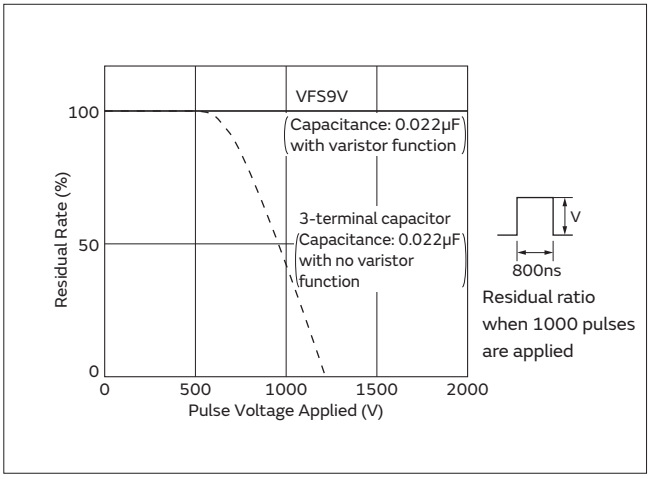

Temperature Characteristics of Varistor Voltage - Insulation Resistance (VFS9V)

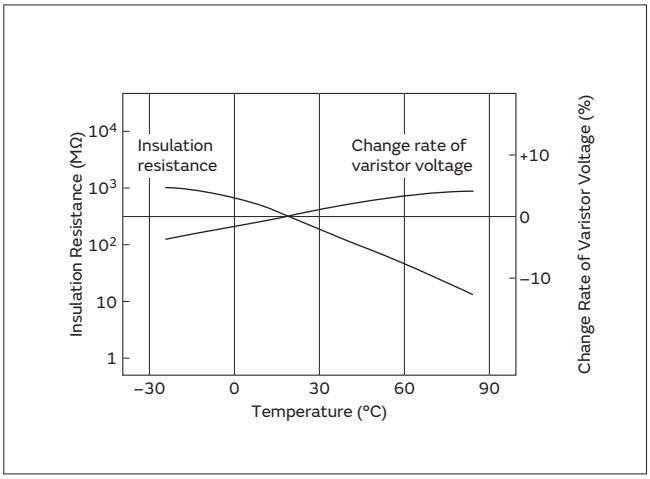

Continued on the following page.↗

Noise Suppression Effect of VFR/VFS Series

Continued from the preceding page.↘

Noise Absorption Effect of EMIGUARD® (VFS9V)

Type of Filter	EMI Suppression Effect	Description
without EMIGUARD®	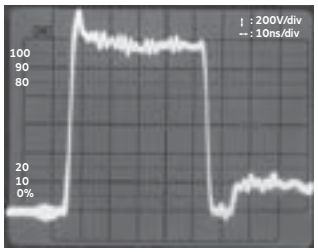	Waveform when EMIGUARD® is not used. (Surge from a noise simulator.)
with EMIGUARD® 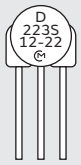	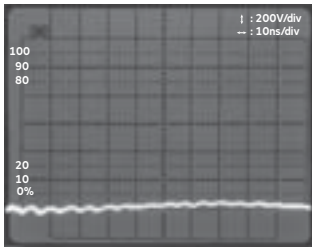	Waveform after the noise passed through EMIGUARD®. Little noise is recorded.

Comparative Data (VFS9V)

1. Absorption of quick-rising, high-frequency noise (10ns/div, 100V/div)

Type of Filter	EMI Suppression Effect	Description
Without Filters	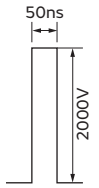 Noise wave applied	
Conventional varistor 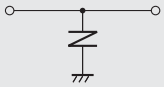	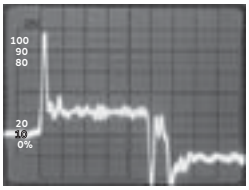	As with the two-terminal capacitor
Two-terminal capacitor (with varistor function) 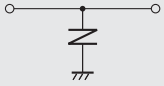	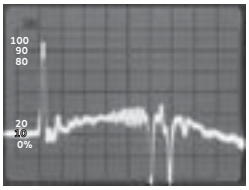	The two-terminal capacitor is influenced by lead line inductance, leaving behind some of the rising and falling edges. The residual noise can cause the system to malfunction.
VFS9V 	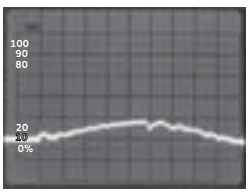	The three-terminal structure eliminates most of the lead line inductance. This allows VFS9V to completely absorb the rising and falling edges of the applied pulses.

Continued on the following page.↗

Noise Suppression Effect of VFR/VFS Series

Continued from the preceding page.↘

2. Absorption of wide-pulse noise (50ns/div, 200V/div)

Type of Filter	EMI Suppression Effect	Description
Without Filters	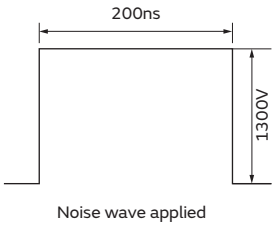 Noise wave applied	
Two-terminal capacitor 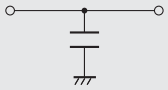	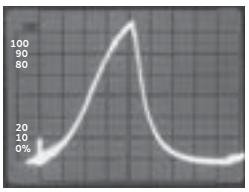	In capacitors the voltage of the residual surge (1300V) is higher than that of the above example. The wave height is almost the same as the original.
Three-terminal capacitor (with ferrite bead) 	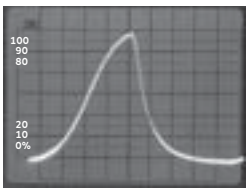	Conventional EMI filters do not work for wide-pulse noise because the capacitors are saturated. In this example, the residual 1200V surge can cause the system to break down.
VFS9V 	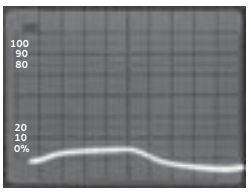	Bypassing the high voltage to the ground suppresses the voltage.

EMI Suppression Filters (Lead Type EMIFIL®)

Common Mode Choke Coils Part Numbering

Common Mode Choke Coils

(Part Number)

PL	T	09H	N	200	3R0	P	1	B
❶	❷	❸	❹	❺	❻	❼	❽	❾

❶Product ID

Product ID	
PL	Common Mode Choke Coils

❷Type

Code	Type
T	DC Type

❸Applications

Code	Applications
09H	for DC Line High-frequency Type

❹Features

Code	Features
N	General Use

❺Inductance

Expressed by three figures. The unit is micro-henry (μH). The first and second figures are significant digits, and the third figure expresses the number of zeros that follow the two figures.

❻Rated Current

Expressed by three-digit alphanumerics. The unit is in amperes (A). A decimal point is expressed by the capital letter "**R**". In this case, all figures are significant digits.

❼Winding Mode

Code	Winding Mode
P	Aligned Winding Type

❽Lead Dimensions

Code	Lead Dimensions
1	5mm

❾Packaging

Code	Packaging	Series
B	Bulk	All series

EMI Suppression Filters (Lead Type EMIFIL®)

Common Mode Choke Coils (for DC Line) PLT09H Series

PLT09H series is a common mode choke coil for DC lines. It is effective against the common mode noise that can cause radiative noise in power supply lines and interface lines. The additional normal mode inductance enables high suppression effect to radiation noise.



PLT09H Series

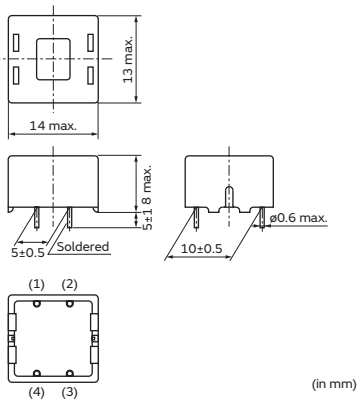

(in mm)

Features

1. This is a wide frequency range type, applicable in applications ranging from a few MHz to several 100MHz.
2. It features a low-profile design.

Applications

1. Noise suppression of SW power supply, DC-DC converter
2. DC power lines in AC adapter of Portable equipment

Part Number	Rated Current (A)	Rated Voltage (Vdc)	Withstand Voltage (Vdc)	Common Mode Inductance (μH)
PLT09HN2003R0P1	3	50	125	20 min.

Operating Temperature Range: -40 to +85°C

Equivalent Circuit

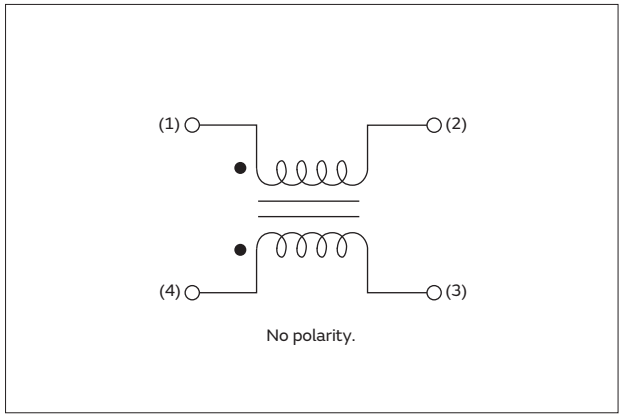

Insertion Loss Characteristics

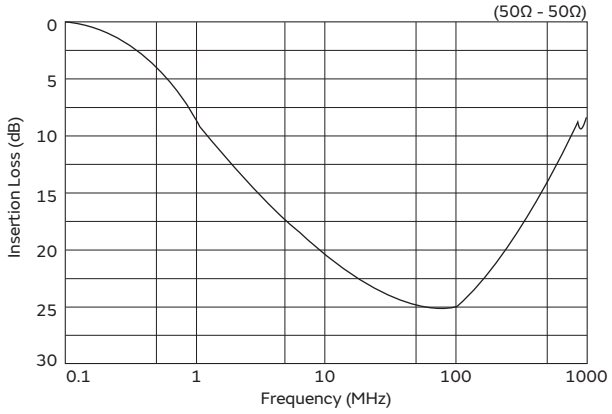

muRata

⚠Caution/Notice

⚠Caution

● Rating

Do not use products beyond the rated current and rated voltage as this may create excessive heat and deteriorate the insulation resistance.

● Soldering and Mounting

1. Mounting holes should be designed as specified in these specifications. Other designs than those shown in these specifications may cause cracks in ceramics that may lead to smoking or firing.
2. DSN9H/DST9H/VFS9V Series
   Mounting for PCB. (Applis only to bulk type.)
   The form of the mounting hole of the bulk item is a triangle. The product should be inserted and soldered to each hole in the correct way as in Fig.1. (The center terminal and the other terminals become parallel when viewing the product from the side.) Smoking and firing maybe caused by incorrect mounting as in Fig.2. (The center terminal and the other terminals cross when viewing the product from the side.)

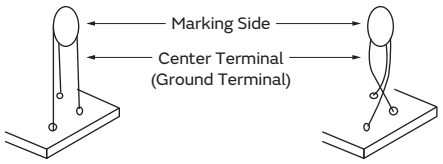

Fig.1 Right Way Fig.2 Wrong Way

3. Take care not to apply any mechanical stress to product body at the lead terminal bending process for product angle adjustment after insertion.

Notice

● Storage and Operating Conditions

<Operating Environment>

1. Do not use products in a chemical atmosphere such as chlorine gas, acid or sulfide gas.
2. Do not use products near water, oil or organic solvents. Avoid environments where dust or dirt may adhere to the product.

<Storage and Handling Requirements>

1. Storage Period
   Use the products within 12 months after delivery. Solderability should be checked if this period is exceeded.
2. Storage Conditions
   (1) Storage temperature: -10 to 40 degrees C
   Relative humidity: 15 to 85%
   Avoid sudden changes in temperature and humidity.
   (2) Do not store products in a chemical atmosphere such as chlorine gas, acid or sulfide gas.
   (3) When restoring taping type (BL01RN1A1F1J), please attach the spacer between the flanges of the reel. The spacer is corrugated paper that is attached when shipping.

<Using EMIGUARD® effectively>

1. Terminal (with mark) should be properly connected to the line of incoming electrostatic surge. (There is polarity.) Otherwise, no effect in ESD suppression can be expected (VFR3V).

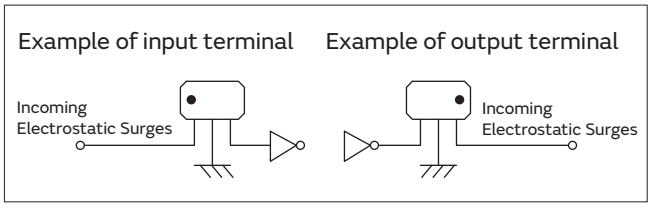

2. Products should be used at rated voltage or less and rated current or less.
3. Products should not be applied for the absorption of surges that have large energy (e.g., induced lightning surges, switching surges) because it is designed for the absorption of electrostatic surges (VFR3V).
4. Electrostatic testing should be done on the following conditions (VFR3V).
   $n \cdot [C / R \cdot V^2]^2 < 8.0 \times 10^5$
   n: Times applied
   C: Charging Capacitance (pF)
   V: Testing Voltage (kV)
   R: Charging Resistance (Ω)

● Soldering and Mounting

1. Washing
   Failure and degradation of a product are caused by the washing method. When you wash in conditions that are not in the mounting information, please contact Murata engineering.
2. Soldering
   Reliability decreases with improper soldering methods. Please solder by the standard soldering conditions shown in the mounting information.
3. Other
   Noise suppression levels resulting from Murata's EMI suppression filters EMIFIL® may vary, depending on the circuits and ICs used, type of noise, mounting pattern, lead wire length, mounting location, and other operating conditions. Be sure to check and confirm in advance the noise suppression effect of each filter, in actual circuits, etc. before applying the filter in a commercial-purpose equipment design.

Soldering and Mounting

1. Mounting Hole

Mounting holes should be designed as specified below.

Part Number	Bulk Type (in mm)	Taping Type (in mm)
VFR3V **VFS6V** **DSS1**	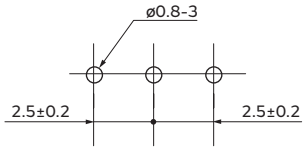	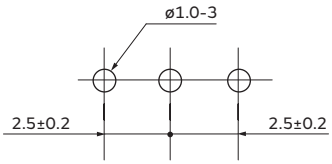
DSN9H	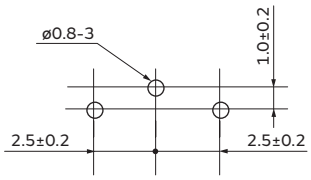	
DST9H	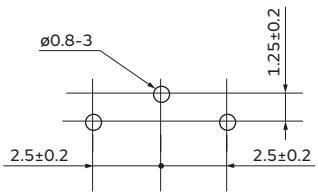	
VFS9V	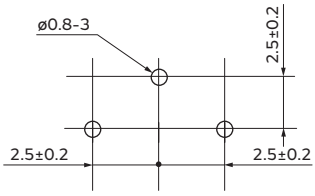	
VFC2H	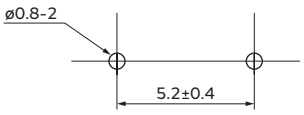	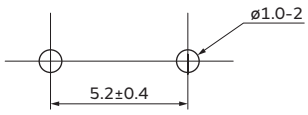

2. Soldering

(1) Use Sn-3.0Ag-0.5Cu solder.
(2) Use Rosin-based flux. Do not use strong acidic flux with halide content exceeding 0.2wt% (chlorine conversion value).
(3) Products and the leads should not be subjected to any mechanical stress during the soldering process, or while subjected to the equivalent high temperatures.
(4) Standard flow soldering profile.

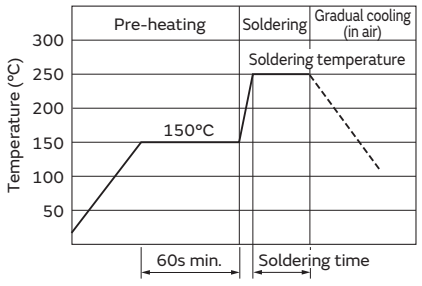

Solder	Soldering Temperature	Soldering Time
Sn-3.0Ag-0.5Cu solder	250 to 260°C	4 to 6s

Continued on the following page.↗

Soldering and Mounting

Continued from the preceding page.↘

3. Cleaning Conditions

Do not clean VFR3V, PLT09H and VFS6V series.

Clean other parts in the following conditions.

(1) Cleaning temperature should be limited to 60°C max.
(40°C max for alcohol type cleaner).

(2) Ultrasonic cleaning should comply with the following conditions, avoiding the resonance phenomenon at the mounted products and PCB.
Power: 20 W / ℓ max. Frequency: 28 to 40kHz
Time: 5 min. max.

(3) Cleaner
(a) Alcohol type cleaner
Isopropyl alcohol (IPA)
(b) Aqueous agent (PLT series cannot be cleaned)
PINE ALPHA ST-100S

(4) There should be no residual flux or residual cleaner left after cleaning.
In the case of using aqueous agent, products should be dried completely after rinsing with de-ionized water in order to remove the cleaner.

(5) The surface of products may become dirty after cleaning, but there is no deterioration on mechanical, electrical characteristics and reliability.

(6) Other cleaning: Please contact us.

Packaging

Minimum Quantity (Pcs.)

Series	Bulk	Ammo Pack	ø320mm Paper Reel
BL01RN	500	1000	2000
BL02RN	500	1500	—
BL03RN	1000	2000	—

Taping Dimensions

BL01RN_A

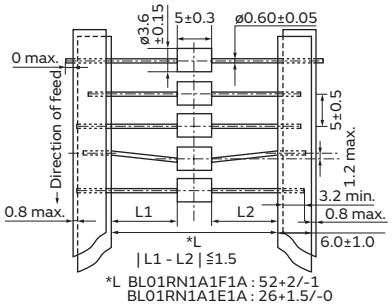

BL02RN1R2□1A

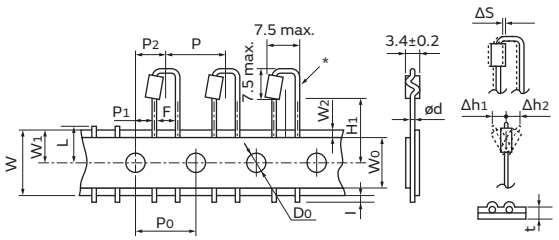

*There is excess bond stick on the wire.

BL02RN1R3N1A

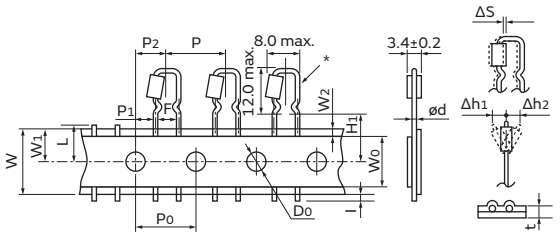

*There is excess bond stick on the wire.

BL02RN2R1□1A

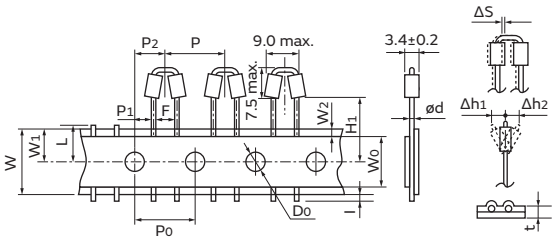

BL02RN2R3N1A

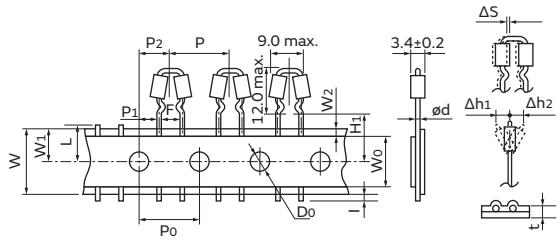

BL03RN2R1□1A

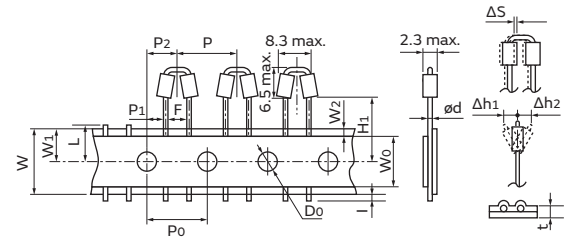

Description	Symbol	Dimension (mm)		Remarks
Pitch of component	P	12.7		Product inclination ΔS determines tolerance
Pitch of sprocket hole	P0	12.7±0.2		
Lead spacing	F	$5.0^{+0.8}_{-0.2}$		
Hole center to lead	P1	3.85±0.7		
Hole center to component center	P2	6.35±1.3		Tape deviation in feeding direction
Offset of bead	ΔS	±1.0		Including the offset caused by lead bend
Carrier tape width	W	18.0±0.5		
Position of sprocket hole	W1	$9.0^{+0}_{-0.5}$		Tape with deviation
Lead length between sprocket hole and forming position	H1	Lead Length Number : N	16.5±0.5	**BL02, BL03**
		Lead Length Number : Q	20.0±0.5	**BL02RN1R2/2R1, BL03**
		Lead Length Number : P	18.5±0.5	**BL02, BL03**
Protruding length	I	+0.5 to −1.0		
Diameter of sprocket hole	D0	ø4.0±0.1		
Lead Diameter	ød	ø0.60		
Total tape thickness	t	0.7±0.2		Including bonding tape thickness
Deviation across tape, Deviation across tape rear	Δh1, Δh2	1.0 max.		
Cutting position of failure	L	$11.0^{+0}_{-1.0}$		
Hold down tape width	W0	12.0±0.5		
Hold down tape position	W2	1.5±1.5		

(in mm)

Packaging

Minimum Quantity

Part Number	Minimum Order Quantity (order in sets only) (pcs.)		
	Ammo Pack	ø320mm Paper Reel	Bulk (Bag)
VFR3V Series	2000	—	250
VFS6V Series	2000	—	250 **T51**
DSN9H Series	2000	—	250 **Q55**
VFS9V Series	—	800	200
VFC2H Series	2000	2000	500
DSS1 Series	1500	1500	250

Lead Type Code

Lead Type Code		Lead Length (H)
Straight Type	Incrimp Type	
Q91	-	20.0±1.0mm
Q92	-	16.5±1.0mm
Q93	**U31**	18.5±1.0mm

Lead Type Code	Lead Length (from bottom of the crimp)
Inside Crimp	
K1B	26.0±1.0mm
M1A	18.0±1.0mm

Taping Dimensions

DSN9H_Q91/Q92/Q93

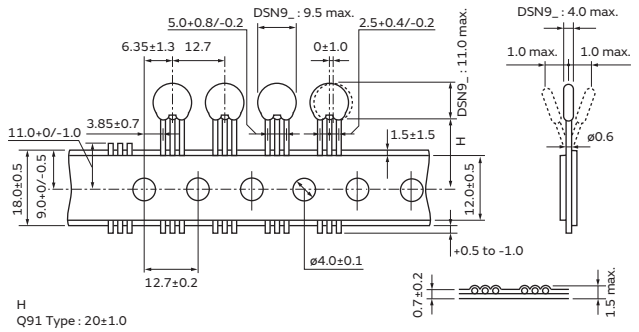

H
Q91 Type : 20±1.0
Q92 Type : 16.5±1.0
Q93 Type : 18.5±1.0

DSS1_Q91

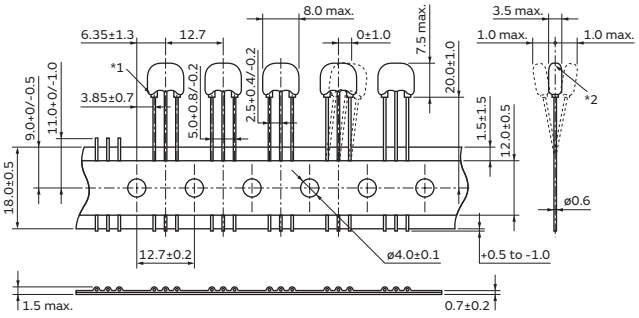

*1 The bottom of the dielectric may be exposed.
*2 If a hole is on the top of the ferrite bead, the bead should not be exposed.

DST9H_Q92/Q93

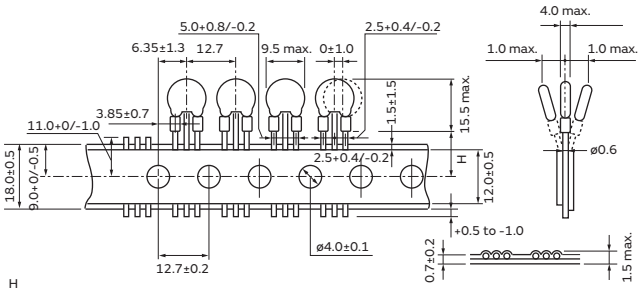

H
Q92 Type : 16.5±1.0
Q93 Type : 18.5±1.0

VFS6V_U31

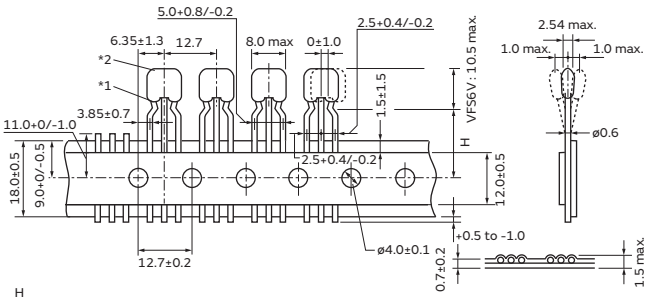

H
U31 Type : 18.5±1.0

*1 The bottom of the dielectric may be exposed.
*2 If a hole is on the top of the ferrite bead, the bead should not be exposed.

VFS9V_Q91/Q92/Q93

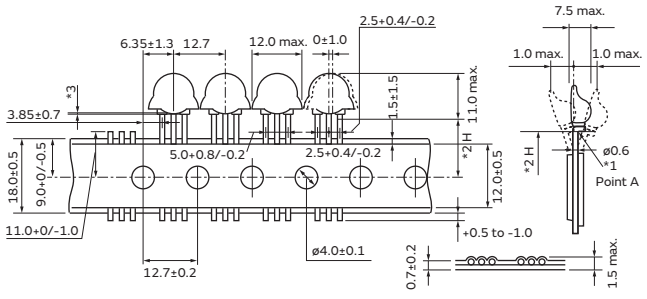

H
Q91 Type : 20±1.0
Q92 Type : 16.5±1.0
Q93 Type : 18.5±1.0

*1 Coating extending on leads does not exceed the start of the bend (point A). Exposed electrodes are covered with solder.
*2 H: to be measured from the forming point A.
*3 The deviation between two ferrite beads should be less than 1.2mm.

VFR3V_U31

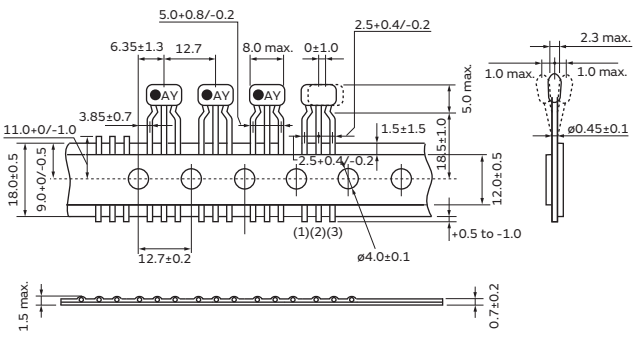

(in mm)

Continued on the following page. ↗

Packaging

Continued from the preceding page. ↘

Taping Dimensions

VFC2H_M1

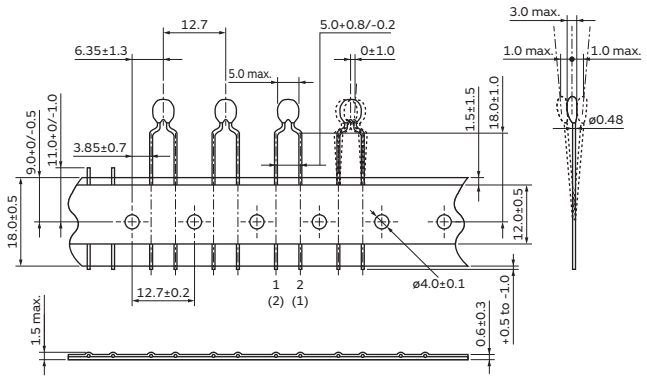

(in mm)

C30E.pdf
May 9,2016
Cat. No. C30E-5

Global Locations

For details please visit www.murata.com



⚠Note

1 Export Control

For customers outside Japan:

No Murata products should be used or sold, through any channels, for use in the design, development, production, utilization, maintenance or operation of, or otherwise contribution to (1) any weapons (Weapons of Mass Destruction [nuclear, chemical or biological weapons or missiles] or conventional weapons) or (2) goods or systems specially designed or intended for military end-use or utilization by military end-users.

For customers in Japan:

For products which are controlled items subject to the "Foreign Exchange and Foreign Trade Law" of Japan, the export license specified by the law is required for export.

2 Please contact our sales representatives or product engineers before using the products in this catalog for the applications listed below, which require especially high reliability for the prevention of defects which might directly damage a third party's life, body or property, or when one of our products is intended for use in applications other than those specified in this catalog.

① *Aircraft equipment*
② *Aerospace equipment*
③ *Undersea equipment*
④ *Power plant equipment*
⑤ *Medical equipment*
⑥ *Transportation equipment (vehicles, trains, ships, etc.)*
⑦ *Traffic signal equipment*
⑧ *Disaster prevention / crime prevention equipment*
⑨ *Data-processing equipment*
⑩ *Application of similar complexity and/or reliability requirements to the applications listed above*

3 Product specifications in this catalog are as of January 2016. They are subject to change or our products in it may be discontinued without advance notice. Please check with our sales representatives or product engineers before ordering. If there are any questions, please contact our sales representatives or product engineers.

4 Please read rating and ⚠CAUTION (for storage, operating, rating, soldering, mounting and handling) in this catalog to prevent smoking and/or burning, etc.

5 This catalog has only typical specifications. Therefore, please approve our product specifications or transact the approval sheet for product specifications before ordering.

6 Please note that unless otherwise specified, we shall assume no responsibility whatsoever for any conflict or dispute that may occur in connection with the effect of our and/or a third party's intellectual property rights and other related rights in consideration of your use of our products and/or information described or contained in our catalogs. In this connection, no representation shall be made to the effect that any third parties are authorized to use the rights mentioned above under licenses without our consent.

7 No ozone depleting substances (ODS) under the Montreal Protocol are used in our manufacturing process.

Murata Manufacturing Co., Ltd.

www.murata.com