Product Description

The **PE25203** is an ultra-high efficiency charge pump that is configurable to divide down an input voltage by two or three and deliver up to 4A at up to 99% peak efficiency.

The PE25203 supports an input voltage range of 5.7V to 10V in divide-by-2 mode and 8.4V to 15V in divide-by-3 mode.

Features

- Proprietary architecture enables industry leading efficiency with an ultra-low profile
- Wide input voltage range, from 5.7V to 15V, supports two- or three-cell mobile computers and 12V-bus point-of-load applications
- Peak efficiency of 99%
- Pin selectable cycle skipping mode for improved light load efficiency
- Dynamically configurable under load in either divide-by-2 or -3 modes
- Low EMI fixed-frequency operation under heavy load conditions
- Fully protected input under-voltage, output over-current and thermal shutdown

Typical Applications

- Two-cell and three-cell lithium platforms
- Ultrabook and notebook computers
- Full-size tablet computers
- Ultra-thin form factor designs
- $12V_{IN}$ point of load designs in networking and telecommunications

Efficiency

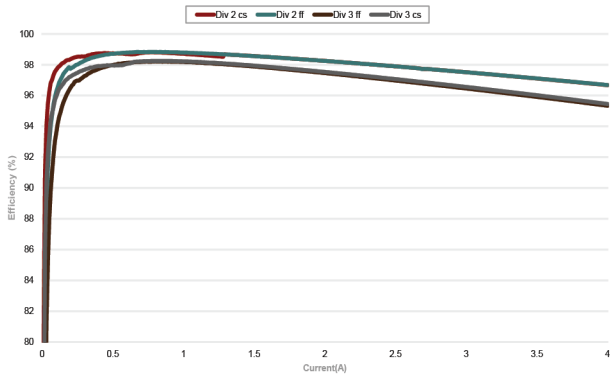

Figure 1. Typical Efficiency VIN=7.7V Divide-by-2 VIN=11.55V Divide-by 3 CFLY=22µF, Fixed Frequency and Cycle Skip Modes

Simplified Application

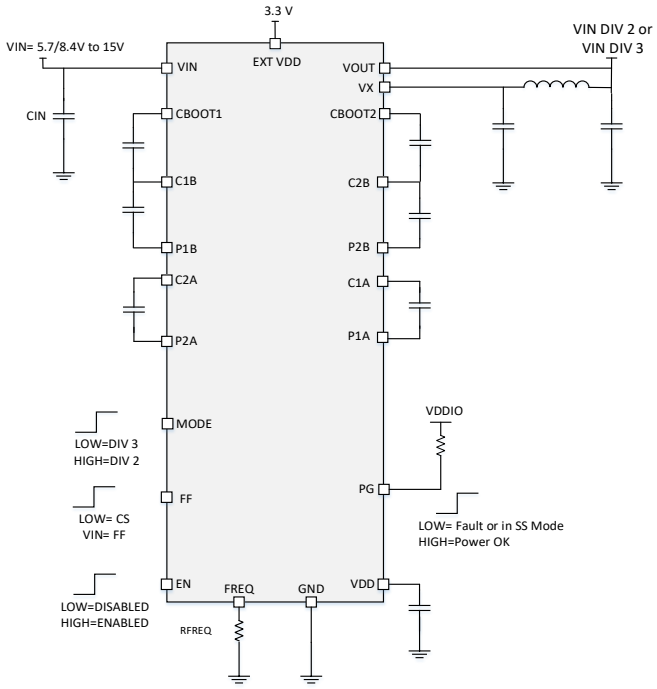

Figure 2. Application Schematic

Copyright ©2022 Murata Manufacturing Co., Ltd. and pSemi Corporation, a Murata Company. All rights reserved.

Application Circuit

Figure 3 shows a typical application circuit, with details of links and corresponding modes of operation, as well as suggested component values.

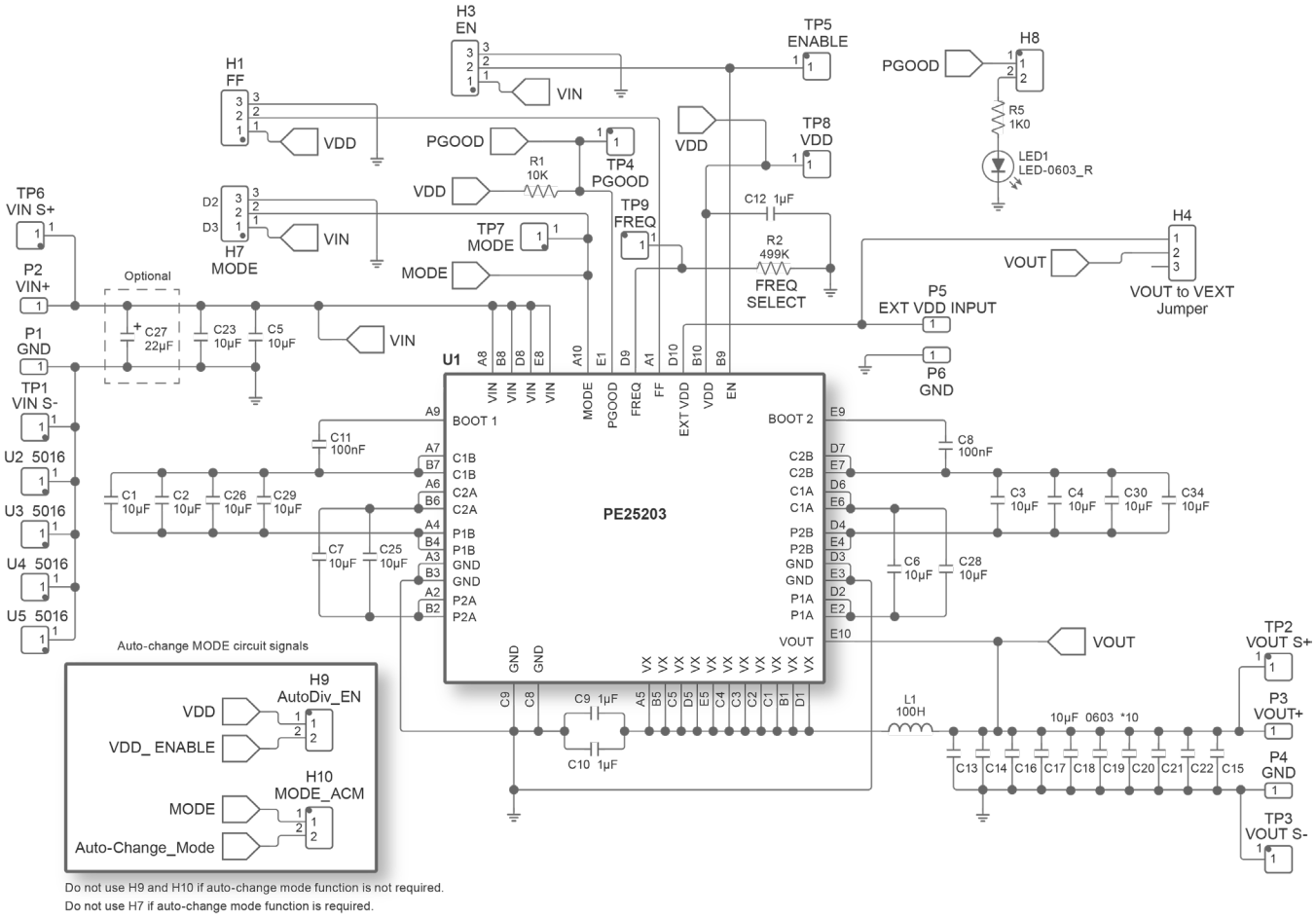

Figure 3. Application Circuit

Copyright ©2022 Murata Manufacturing Co., Ltd. and pSemi Corporation, a Murata Company. All rights reserved.

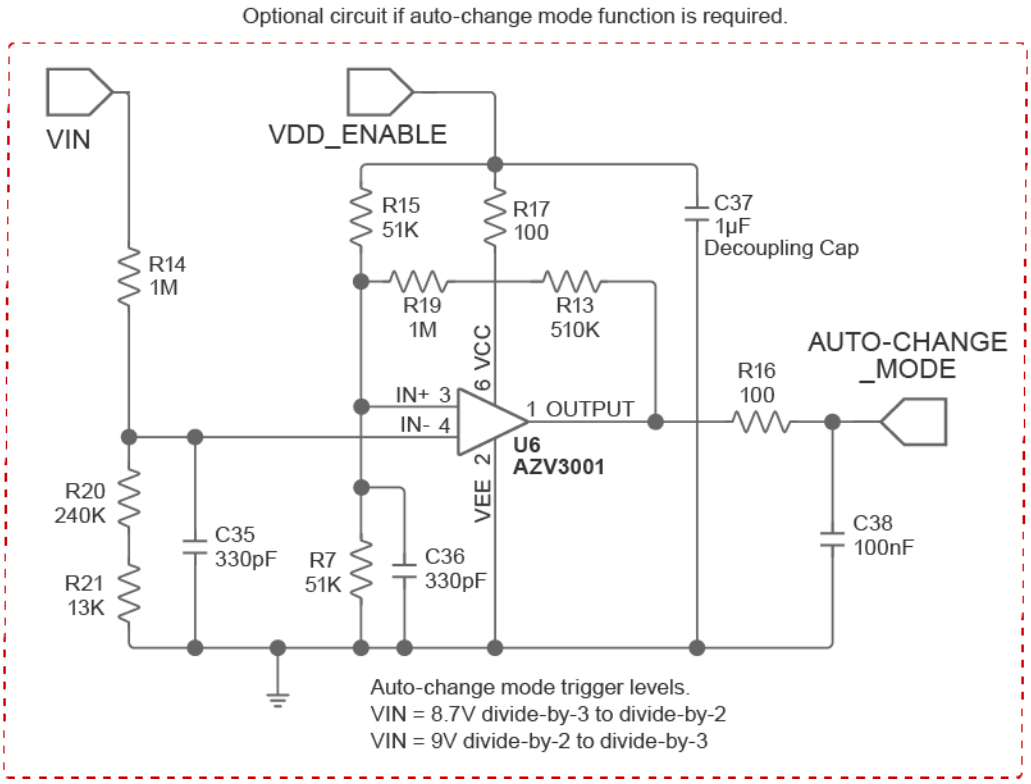

Figure 4. Optional Auto-change Circuit

Copyright ©2022 Murata Manufacturing Co., Ltd. and pSemi Corporation, a Murata Company. All rights reserved.

Application Information

The PE25203 is a charge pump-based DC-DC radiometric converter. It is a high-efficiency bus converter in which the output follows the input by a fixed ratio of divide-by-2 or divide-by-3.

Application Circuit Part List

Table 1 lists Murata recommended part numbers.

REF. NUMBER	VALUE	DESCRIPTION	PART NUMBER
C1,C2,C3,C4,C5,C6,C7,C23,C25, C26,C28,C29,C30,C34	10 µF	CAP, SMD, 10UF 25V 0603 X5R	GMR188R61E106KA73D
C8,C11,C38	100 nF	CAP, SMD, 100NF 100V 0603 X7R	GRM188R72A104KA35D
C9,C10,C12,C37	1 µf	CAP, SMD, 1UF 25V 0603 X7R	GCJ188R71E105KA01D
C13,C14,C15,C16,C17,C18,C19, C20,C21,C22	10 µf	CAP, SMD, 10UF 6.3V 0603 XR5	GRM188R60J106ME47J
C24	22 µF	CAP, TH, ALUMINUM ELECTROLYTIC CAPACITOR, 22UF, 100V, 20%, RADIAL	UVZ2A220MED1TD
L1	100 nH	IND, SMD, Thin Film Inductor, AEC-Q200, 100 nH, 9000 µohm, 12 A, 2.5 mm x 2 mm x 1.2 mm, TFM-ALMA	TFM252012ALMAR10MTAA or INDC2016X120N as Murata alternative
U1	PE25201-3	IC, PE25203	pSemi
R2	499k	RES, SMD, 499 kohm, ± 1%, 125 mW, 0805 [2012 Metric], Thick Film	RC0805FR-07499KL
LED1	LED-RED	LED, SMD, Red LED Indication - Discrete 1.95V 0603	19-217/R6C-AL1M2VY/3T
R5	1k0	RES, SMD, 1 kohm, ± 1%, 125 mW, 0805 [2012 Metric], Thick Film	RC0805FR-071KL
R1	10k	RES, SMD, 10 kohm, ± 1%, 125 mW, 0805 [2012 Metric], Thick Film	RC0805FR-0710KL

Table 1. Murata Recommended Parts

Copyright ©2022 Murata Manufacturing Co., Ltd. and pSemi Corporation, a Murata Company. All rights reserved.

Evaluation Board

Figure 5 shows the PE25203 device evaluation board.

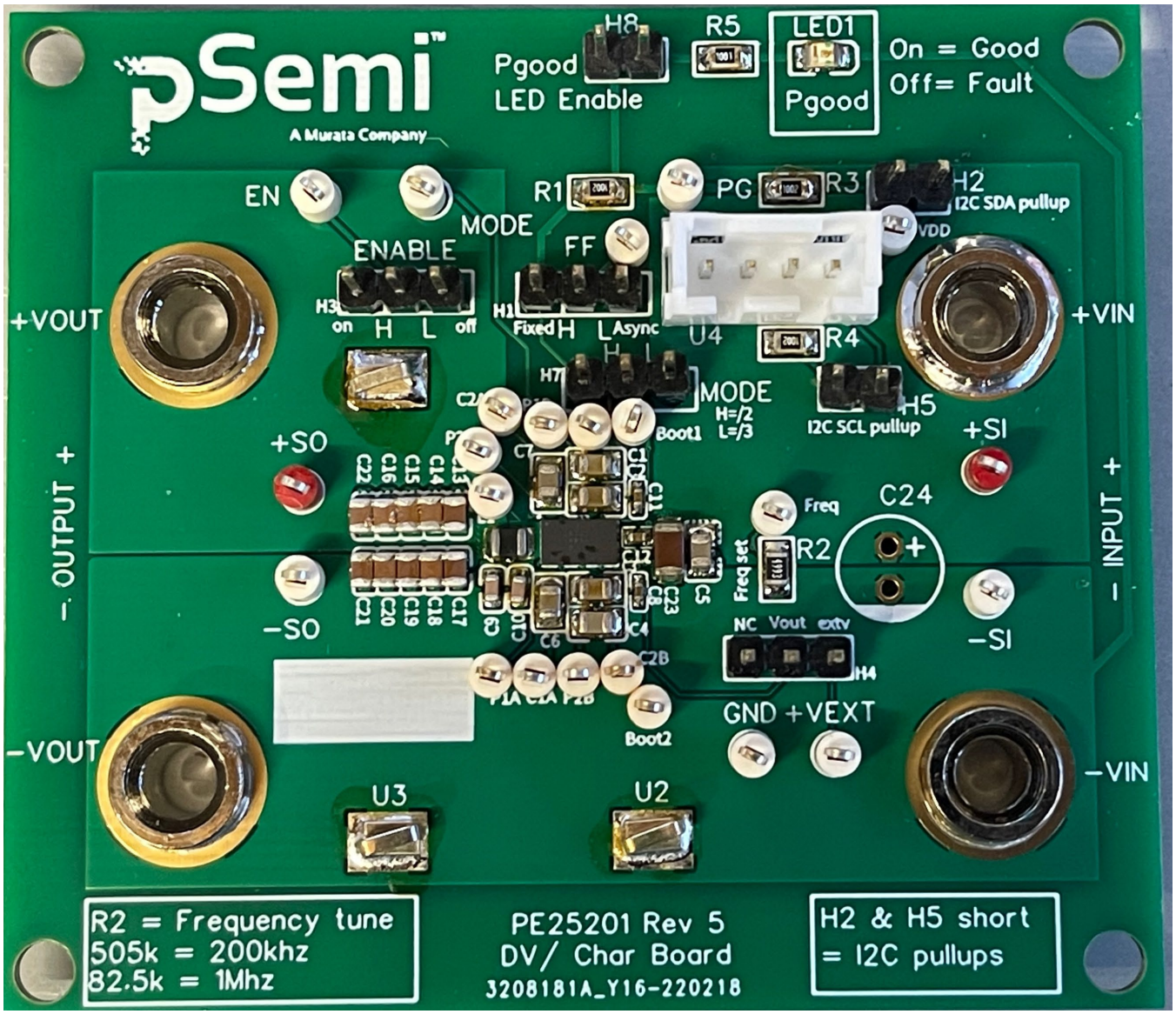

Figure 5. Device Board (EVK)

Copyright ©2022 Murata Manufacturing Co., Ltd. and pSemi Corporation, a Murata Company. All rights reserved.

Order Codes

Table 2 lists the available ordering codes for the PE25203 as well as available shipping methods.

ORDER CODES	DESCRIPTION	PACKAGING	SHIPPING METHOD
PE25203A-X	4A Charge Pump Divide 2/3	WLCSP on Tape and Reel	500 Units / T&R
PE25203A-R	4A Charge Pump Divide 2/3	WLCSP on Tape and Reel	5000 Units / T&R
EK25203-01	PE25203 DC-DC converter evaluation board assembly	Populated PCB	1 Unit

Table 2. Order Codes

Copyright ©2022 Murata Manufacturing Co., Ltd. and pSemi Corporation, a Murata Company. All rights reserved.

Notices

⚠ CAUTION

Limitation of Applications

Please contact us before using our products for the applications listed below which require especially high reliability for the prevention of defects which might lead to damage to life, body, or property.

- Aircraft equipment
- Aerospace equipment
- Undersea equipment
- Power plant control equipment
- Surgical implants
- Transportation equipment (vehicles, trains, ships, etc.)
- Traffic signal equipment
- Disaster prevention / crime prevention equipment
- Application of similar complexity and/or reliability requirements to the applications listed in the above

⚠ Notes

- Please make sure that your product has been evaluated and confirmed to your specifications when our product is used in your product.
- All the items and parameters in this approval sheet for product specification are based on the premise that our product is used for the purpose, under the condition and in the environment agreed upon between you and us. You are requested not to use our product in a manner deviating from such agreement.
- If you have any concerns about materials other than those listed in the RoHS directive, please contact us.
- Be sure to provide an appropriate fail-safe functionality in your product to prevent secondary damage that could be caused by the abnormal function or failure of our product.
- Do not allow our product to be exposed to excess moisture under any circumstances.

Copyright ©2022 Murata Manufacturing Co., Ltd. and pSemi Corporation, a Murata Company. All rights reserved.

Document Categories

Advance Information

The product is in a formative or design stage. The datasheet contains design target specifications for product development. Specifications and features may change in any manner without notice.

Preliminary Specification

The datasheet contains preliminary data. Additional data may be added at a later date. Murata reserves the right to change specifications at any time without notice in order to supply the best possible product.

Product Specification

The datasheet contains final data. In the event Murata decides to change the specifications, Murata will notify customers of the intended changes by issuing a CNF (Customer Notification Form).

Product Brief

The datasheet contains summary product information.

Sales Contact

For additional information, contact Sales at **https://www.murata.com/contactform.**

Disclaimers

The information in this document is believed to be reliable. However, Murata and its affiliates do not assume any liability for the use of this information or use of this product. Use shall be entirely at the user's own risk. No patent rights or licenses to any circuits described in this document are implied or granted to any third party. Further, Murata and its affiliates do not assume any liability for damages, including consequential or incidental damages, arising out of the use of this product by customer or any third party in any application for any purpose.

Patent Statement

The products described herein are protected under one or more U.S. patents as further described at: **patents.psemi.com**

Copyright ©2022 Murata Manufacturing Co., Ltd. and pSemi Corporation, a Murata Company. All rights reserved.

Copyright and Trademark

2022 Murata Manufacturing Co., Ltd. and pSemi Corporation, a Murata Company. All rights reserved.

This product is subject to the following operating requirements and the Life and Safety Critical Application Sales Policy.
Refer to: https://power.murata.com/en/requirements

Murata Manufacturing Co., Ltd makes no representation that the use of its products in the circuits described herein, or the use of other technical information contained herein, will not infringe upon existing or future patent rights. The descriptions contained herein do not imply the granting of licenses to make, use, or sell equipment constructed in accordance therewith. Spec and cautions are subject to change without notice.
© 2022 Murata Manufacturing Co., Ltd

Copyright ©2022 Murata Manufacturing Co., Ltd. and pSemi Corporation, a Murata Company. All rights reserved.