Note: If you have not downloaded this document from our official website, please note that the information provided may not be the most current.
Please download the latest datasheet of LQH3NPN470MMR# from the official website of Murata

http://www.murata.com/en/products/productdetail?partno=LQH3NPN470MMR%23

LQH3NPN470MMR#

"#"at the end indicates the package specification code.

Low DC Resistance Type

Discontinued | RoHS | REACH | 125 °C max. | Wound (Ferrite) | Low Rdc | Reflow OK

< List of part numbers with package codes >

LQH3NPN470MMRE LQH3NPN470MMRF

Applications

Unsuitable Applications	Please be sure to read and comply with these "Precautions for use."
Specific Applications	Consumer equipment,Medical equipment [GHTF A/B/C] except for implant & surgery & auto injector, Industrial equipment except for transportation & facility & energy equipment Please refer to Our Website and specifications, etc. for information about the performance, functions, quality, management, and safety required for the above applications, and use Products after confirming the performance and reliability of the actual Product.
Recommended Applications	Consumer equipment

Appearance & Shape

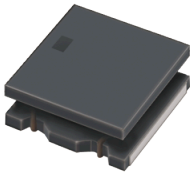

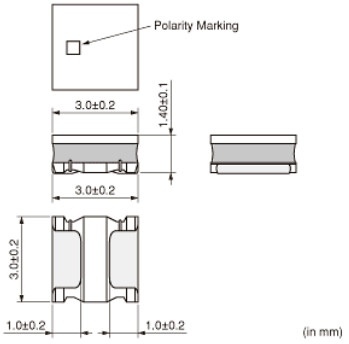

Notices

When rated current is applied to the products, inductance will be within ±30% of nominal inductance value. When rated current is applied to the products, the temperature rise caused by self-generated heat shall be limited to 40°C max. Keep the temperature (ambient temperature plus self-generation of heat) under 125°C.

Attention
1.This datasheet is downloaded from the website of Murata Manufacturing Co., Ltd. Therefore, it's specifications are subject to change or our products in it may be discontinued without advance notice. Please check with our sales representatives or product engineers before ordering.
2.This datasheet has only typical specifications because there is no space for detailed specifications.
Therefore, please review our product specifications or consult the approval sheet for product specifications before ordering.

Note: If you have not downloaded this document from our official website, please note that the information provided may not be the most current.
Please download the latest datasheet of LQH3NPN470MMR# from the official website of Murata

http://www.murata.com/en/products/productdetail?partno=LQH3NPN470MMR%23

LQH3NPN470MMR#

"#"at the end indicates the package specification code.

References

Packaging	Specifications	Standard Packing Quantity
E	180Embossed Tape E	2000
F	330Embossed Tape	8000

Mass (typ.)	
1 piece	0.051g

Attention
1.This datasheet is downloaded from the website of Murata Manufacturing Co., Ltd. Therefore, it's specifications are subject to change or our products in it may be discontinued without advance notice. Please check with our sales representatives or product engineers before ordering.
2.This datasheet has only typical specifications because there is no space for detailed specifications.
Therefore, please review our product specifications or consult the approval sheet for product specifications before ordering.

Note: If you have not downloaded this document from our official website, please note that the information provided may not be the most current.
Please download the latest datasheet of LQH3NPN470MMR# from the official website of Murata

http://www.murata.com/en/products/productdetail?partno=LQH3NPN470MMR%23

LQH3NPN470MMR#

"#"at the end indicates the package specification code.

Specifications

L size	3.0±0.2mm
W size	3.0±0.2mm
T size	1.4±0.1mm
Size code inch (mm)	1212 (3030)
Inductance	47μH±20%
Inductance Test Frequency	1MHz
Rated current (Isat) (Based on Inductance change)	320mA
Rated current (Itemp) (Based on Temperature rise)	460mA
Max. of DC resistance	1.368Ω
DC resistance	1.140Ω±20%
Operating Temperature Range (Self-temperature rise is included)	-40℃ to 125℃
Operating Temperature Range(Self-temperature rise is not included)	-40℃ to 85℃
Class of magnetic shield	Shielded（Magnetic Resin）
Self resonance frequency (min.)	10MHz
Brand	Murata
Series	LQH3NPN_MR

Attention
1.This datasheet is downloaded from the website of Murata Manufacturing Co., Ltd. Therefore, it's specifications are subject to change or our products in it may be discontinued without advance notice. Please check with our sales representatives or product engineers before ordering.
2.This datasheet has only typical specifications because there is no space for detailed specifications.
Therefore, please review our product specifications or consult the approval sheet for product specifications before ordering.

Note: If you have not downloaded this document from our official website, please note that the information provided may not be the most current.
Please download the latest datasheet of LQH3NPN470MMR# from the official website of Murata

http://www.murata.com/en/products/productdetail?partno=LQH3NPN470MMR%23

LQH3NPN470MMR#

"#"at the end indicates the package specification code.

Characteristic Data

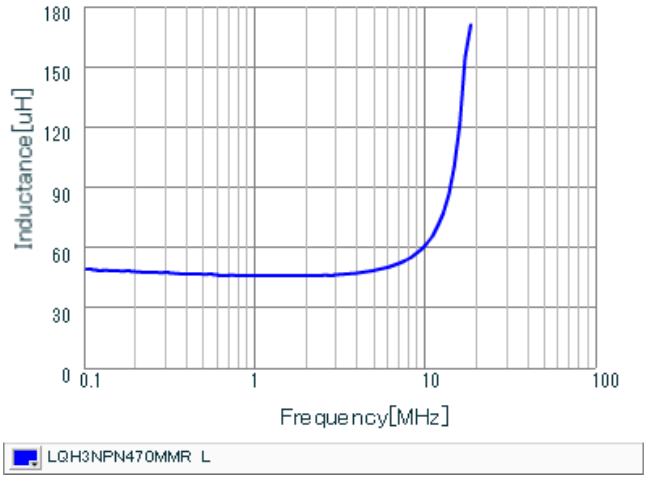

Inductance - Frequency Characteristics

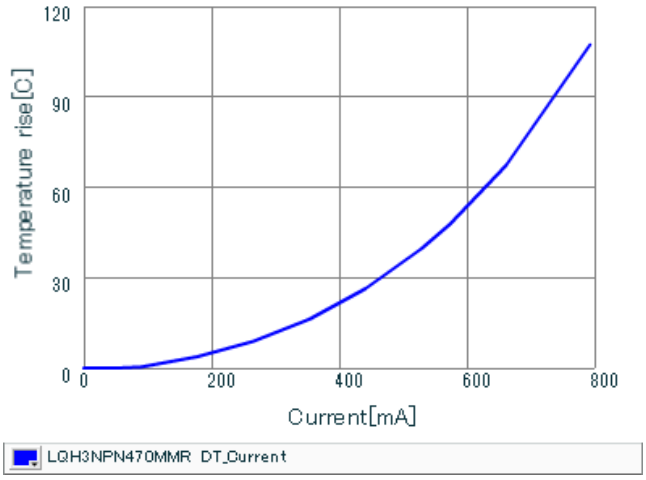

Temperature Increase Characteristic

Attention
1.This datasheet is downloaded from the website of Murata Manufacturing Co., Ltd. Therefore, it's specifications are subject to change or our products in it may be discontinued without advance notice. Please check with our sales representatives or product engineers before ordering.
2.This datasheet has only typical specifications because there is no space for detailed specifications.
Therefore, please review our product specifications or consult the approval sheet for product specifications before ordering.