⚠Note • This PDF catalog is downloaded from the website of Murata Manufacturing co., ltd. Therefore, it's specifications are subject to change or our products in it may be discontinued without advance notice. Please check with our sales representatives or product engineers before ordering.
• This PDF catalog has only typical specifications because there is no space for detailed specifications. Therefore, please approve our product specifications or transact the approval sheet for product specifications before ordering.

O30E.pdf
07.9.3

Microwave Coaxial Connectors



Innovator in Electronics

Murata
Manufacturing Co., Ltd.

Cat.No.O30E-8

⚠Note • This PDF catalog is downloaded from the website of Murata Manufacturing co., ltd. Therefore, it's specifications are subject to change or our products in it may be discontinued without advance notice. Please check with our sales representatives or product engineers before ordering.
• This PDF catalog has only typical specifications because there is no space for detailed specifications. Therefore, please approve our product specifications or transact the approval sheet for product specifications before ordering.

for EU RoHS Compliant

・All the products on this catalog are complied with EU RoHS.
・EU RoHS is "the European Directive 2002/95/EC on the Restriction of the Use of Certain Hazardous Substances in Electrical and Electronic Equipment".
・For more details, please refer to our website 'Murata's Approach for EU RoHS' (http://www.murata.com/info/rohs.html).

⚠Note • This PDF catalog is downloaded from the website of Murata Manufacturing co., ltd. Therefore, it's specifications are subject to change or our products in it may be discontinued without advance notice. Please check with our sales representatives or product engineers before ordering.
• This PDF catalog has only typical specifications because there is no space for detailed specifications. Therefore, please approve our product specifications or transact the approval sheet for product specifications before ordering.

CONTENTS

Part Numbering ——— 2

1 **Microwave Coaxial Connectors with Switch SWF Type** ——— 3

● Notice ——— 5

● Package ——— 8

2 **Microwave Coaxial Connectors with Switch SWD Type** ——— 9

● Notice ——— 11

● Package ——— 14

3 **Ultra Miniature SMT HSC Type** ——— 15

● Notice ——— 18

● Package ——— 21

4 **Miniature SMT GSC Type** ——— 22

● Notice ——— 25

● Package ——— 28

5 **SMT FSC Type** ——— 29

● Notice ——— 32

● Package ——— 35

Miniaturized Microwave Coaxial Connector Cable List ——— 36

⚠Note • This PDF catalog is downloaded from the website of Murata Manufacturing co., ltd. Therefore, it's specifications are subject to change or our products in it may be discontinued without advance notice. Please check with our sales representatives or product engineers before ordering.
• This PDF catalog has only typical specifications because there is no space for detailed specifications. Therefore, please approve our product specifications or transact the approval sheet for product specifications before ordering.

● Part Numbering

Coaxial Connectors (Chip Type Receptacle)

(Part Number) **MM** **7329** **-27** **00** **R** **A1**
❶ ❷ ❸ ❹ ❺ ❻

❶Product ID

Product ID	
MM	Microwave Coaxial Connectors (Chip Type Receptacle)

❷Series

Code	Series
4829	HSC Type
7329	FSC Type
8130	SWF Type
8430	SWD Type
9329	GSC Type

❸Individual Specification Code (1)

Code	Individual Specification Code (1)
-26	Switch Connector SMD Type
-27	Connector SMD Type

❹Individual Specification Code (2)

Code	Individual Specification Code (2)
00	Serial

❺Package Product ID

Code	Package Product ID
B	Bulk
R	Reel

❻Package Detail

Code	Package Detail
A1	FSC, SWD, GSC Type 1000pcs. /Reel (ø178mm)
A4	HSC Type, 4000pcs. /Reel (ø178mm)
B0	HSC Type, 10000pcs. /Reel (ø330mm)
B3	SWD Type, 3000pcs. /Reel (ø330mm)
B4	FSC Type, 4000pcs. /Reel (ø330mm)
B5	GSC Type, 5000pcs. /Reel (ø330mm)
B8	SWF Type, 8000pcs. /Reel (ø330mm)

Coaxial Connectors (with Cable)

(Part Number) **MX** **FG** **76** ☐ ☐ ☐
❶ ❷ ❸ ❹ ❺ ❻

❶Product ID

Product ID	
MX	Coaxial Connectors (with Cable)

❷Connector (1)

Code	Connector (1)
FG	FSC Type for 76 Cable
FK	FSC Type for 81 Cable
HP	HSC Type
TK	GSC Type

❸Cable

Code	Cable
32	0.4D, PFA, Single Shield Line, Spiral
76	0.8D, FEP, Single Shield Line
81	0.4D, FEP, Single Shield Line
88	0.4D, PFA, Single Shield Line, Single Line
92	0.4D, PFA, Single Shield Line, Spiral

❹Connector (2)

Code	Connector (2)
FG	FSC Type for 76 Cable
FK	FSC Type for 81 Cable
HP	HSC Type
TK	GSC Type
XX	None Connector

❺Length

Expressed by four figures. The unit is mm. From first to third figures are significant, and the fourth figure expresses the number of zeros which follow the three figures.

Ex.)

Code	Length
5000	500mm = 500 x 10^0
1001	1000mm = 100 x 10^1

❻Individual Specification Code

Expressed by two sign.

⚠Note • This PDF catalog is downloaded from the website of Murata Manufacturing co., ltd. Therefore, it's specifications are subject to change or our products in it may be discontinued without advance notice. Please check with our sales representatives or product engineers before ordering.
• This PDF catalog has only typical specifications because there is no space for detailed specifications. Therefore, please approve our product specifications or transact the approval sheet for product specifications before ordering.

Microwave Coaxial Connectors

Microwave Coaxial Connectors with Switch SWF Type

■ Features

1. The coaxial connector with switch is very useful for characteristic measurement Cellular phone and microwave circuit.
2. It is possible to switch the line connection and disconnection easily by special probe.
3. Small size, low profile, size 2.5x2.5x1.4mm (LxWxH)
4. Excellent characteristics, low IL 0.2dB max. V.S.W.R. 1.3 max. Isolation 15dB min. (DC to 6GHz)
5. Surface mountable and reflow solderable
6. Tape package available



MM8130-2600

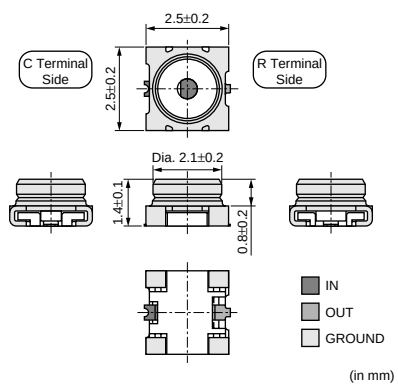

(in mm)

■ Applications

Cellular phone, W-LAN, Other wireless and measurement equipment

Part Number	Rated Voltage (Vrms)	Contact Resistance (max.) (ohm)	Withstand Voltage (Vrms)	Insulation Resistance (M ohm)	Durability (cycles)	Frequency Rating	Temperature Range (degree C)	VSWR	Insertion Loss (On) (dB)	Isolation (Off) (dB)	Inner Electrode (C)	Inner Electrode (R) (material)	Outer Electrode (material)
MM8130-2600	250	0.07	300 (AC)	500	100	to 6GHz	-40 to +85	1.2 max. (DC to 3GHz)	0.1 max. (DC to 3GHz)	20 min. (DC to 3GHz)	Stainless Steel Gold plated	Stainless Steel Gold plated	Copper Alloy Gold plated

Impedance: 50ohm

■ Measurement Probe Dimensions

MM126036

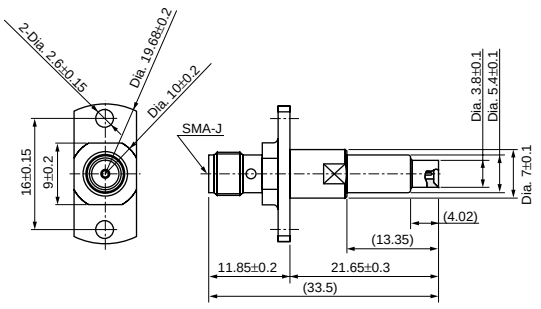

(in mm)

MXHS83QE3000

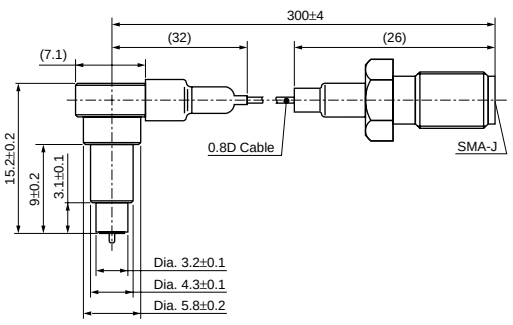

(in mm)

Continued on the following page.

⚠Note • This PDF catalog is downloaded from the website of Murata Manufacturing co., ltd. Therefore, it's specifications are subject to change or our products in it may be discontinued without advance notice. Please check with our sales representatives or product engineers before ordering.
• This PDF catalog has only typical specifications because there is no space for detailed specifications. Therefore, please approve our product specifications or transact the approval sheet for product specifications before ordering.

Continued from the preceding page.

1

■ Measurement Probe Dimensions

MXHS83QH3000

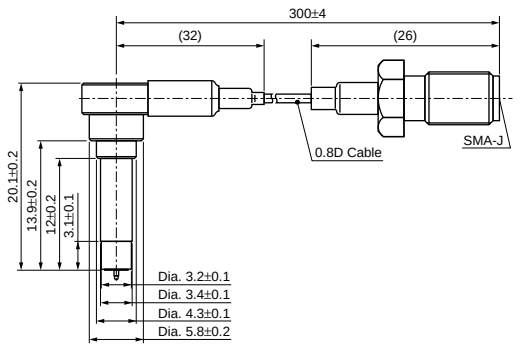

(in mm)

■ Structure

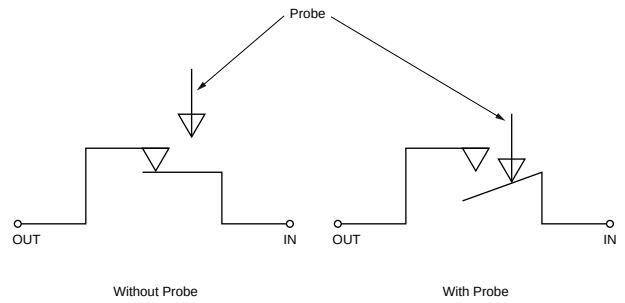

■ Standard Land Dimensions

1. Standard Pattern Dimensions

- I/O pattern should be designed to match 50 ohm impedance circuit.
- Typical PCB material is glass epoxy (εr=4.8). Thickness is 1.0mm.
- The solder resist should be printed except for the land pattern on the PCB.

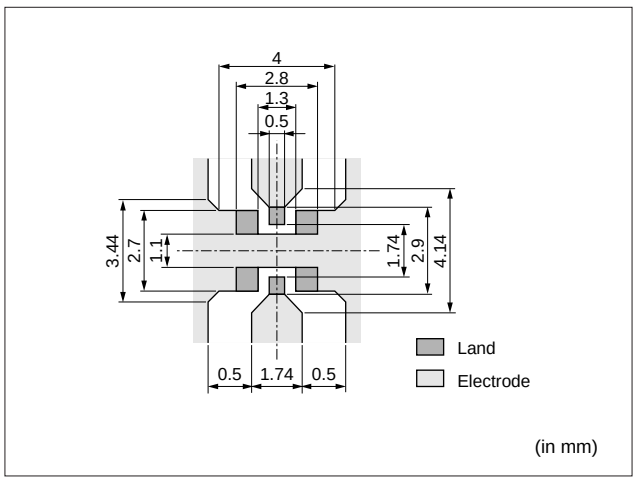

2. Standard Solder Stencil Mask Pattern

Follow standard solder stencil mask pattern to avoid the possibility of solder being trapped under connector.

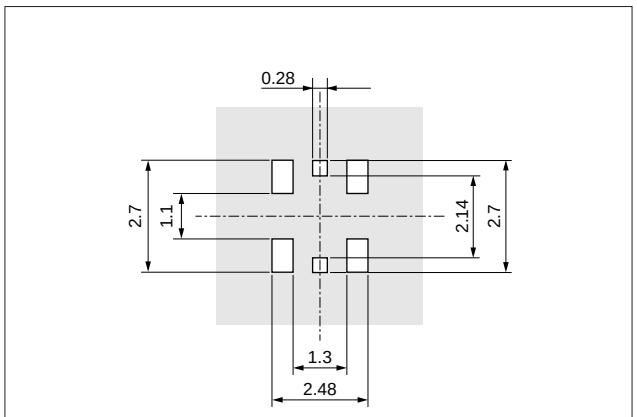

⚠Note • This PDF catalog is downloaded from the website of Murata Manufacturing co., ltd. Therefore, it's specifications are subject to change or our products in it may be discontinued without advance notice. Please check with our sales representatives or product engineers before ordering.
• This PDF catalog has only typical specifications because there is no space for detailed specifications. Therefore, please approve our product specifications or transact the approval sheet for product specifications before ordering.

■ Notice (Storage and Operating Condition)

1. Environment Conditions

(1) This product is designed for use in electrical equipment in the environment (temperature, humidity, atmospheric pressure, etc.) specified in this approval drawing. It may not be used in the following environments or under the following conditions:

(a) Ambient air containing corrosive gas (Chlorine gas, Hydrogen sulfide gas, Ammonia gas, Sulfuric acid gas, Nitric oxide gas, etc.)

(b) Ambient air containing volatile or combustible gas

(c) In liquid (water, oil, chemical solution, organic solvents, etc.)

(d) In environments with a high concentration of airborne particles

(e) In direct sunlight

(f) Dusty conditions

(g) In freezing

(h) Other environments similar to the above conditions

(2) Contact the manufacturer before using the product in any of the above environments or under any of the above conditions.

2. Storage

Store in manufacturer's package or tightly re-closed box with the following conditions. Use this product within 6 months after receipt. Check the terminal solderability before use if the product has been stored for more than 6 months.

Temperature: -10 to +40 degree C

Humidity: 15 to 85% RH

⚠Note • This PDF catalog is downloaded from the website of Murata Manufacturing co., ltd. Therefore, it's specifications are subject to change or our products in it may be discontinued without advance notice. Please check with our sales representatives or product engineers before ordering.
• This PDF catalog has only typical specifications because there is no space for detailed specifications. Therefore, please approve our product specifications or transact the approval sheet for product specifications before ordering.

1 Notice

■ Notice (Soldering and Mounting)

1. Reflow soldering
   Soldering must be carried out without exceeding the allowable soldering temperature and time shown within the shaded area of Figure "Allowable Temperature and Time of Reflow Soldering".
   In case the soldering is repeated, the maximum time in Figure "Allowable Temperature and Time of Reflow Soldering" should be accumulated time. The standard soldering conditions are shown in Figure "Reflow Soldering Standard Conditions".
   Follow standard solder stencil mask pattern to avoid the possibility of solder being trapped under connector.

2. Soldering by soldering iron
   Soldering by soldering iron should be carried out in accordance to the following conditions.

Pre-heating	Temperature	150℃
	Time	60 to 120 s.
Soldering	Temperature (at the tip of the soldering iron) less than 350℃	
	Time	less than 3 s.

3. We cannot warrant against mishaps caused by any use of this product that deviates from allowable temperature and time of reflow soldering.

4. In soldering, do not apply excessive mechanical force to terminals or leads greater than specified in the drawing.

5. Please note the following in case of soldering terminals or leads of the product.
   (1) Use Rosin based flux, but not with strong acid flux (Chlorine content should be less than 0.20wt%).
   (2) Flux should be thoroughly cleaned from connector to prevent possible deterioration of electrical characteristics.

6. Please mount this product at the position so that stress by wrap and/or bend of the PCB may not apply to it.

7. Please avoid the cleaning of this product.

Allowable Temperature and Time of Reflow Soldering

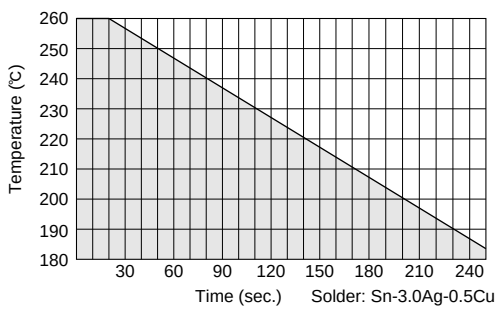

Reflow Soldering Standard Conditions

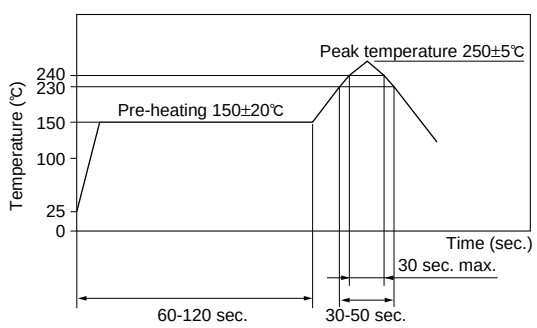

Measuring point of temperature: In-Out Terminals of the Device
Reflow Soldering: Both Convection and Infrared Rays
: Hot Air
: Hot Plate

Continued on the following page.

⚠Note • This PDF catalog is downloaded from the website of Murata Manufacturing co., ltd. Therefore, it's specifications are subject to change or our products in it may be discontinued without advance notice. Please check with our sales representatives or product engineers before ordering.
• This PDF catalog has only typical specifications because there is no space for detailed specifications. Therefore, please approve our product specifications or transact the approval sheet for product specifications before ordering.

Notice

Continued from the preceding page.

■ Notice(Handling)

1. Automatic Measurement Probe (MM126036)

- Automatic measurement probe (MM126036) should be used on the condition in Fig. 1 for good connection without any damages.
- The engagement strokes from the flange to the tip of probe is 18.28mm to 19.78mm with vertical (0+/-2 degree) direction.

Fig. 1 Insertion the Automatic Measurement Probe (MM126036) in Receptacle (MM8130-2600)

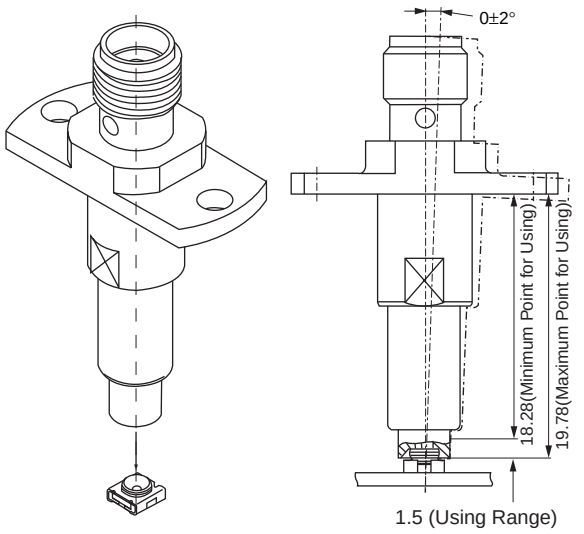

2. L Type Probe with Locking Function (MXHS83QE3000, MXHS83QH3000)

- Do not try to pull the cable, when a connector with a coaxial cable is handled.
- Do not give a twisted torque to the cable and connector.
- Mechanical stress:
  The stress to the connector should be limited as figure shown right.
  (1) Stress to the housing.
  Stress A and B: 0.5N max.
  (2) Stress to the outer sleeve.
  Stress C: 0.6N max.
  Stress D: 0.6N max.
  (3) Cable pull strength.
  Stress E: 0.5N max.

Mechanical Stress after Engagement

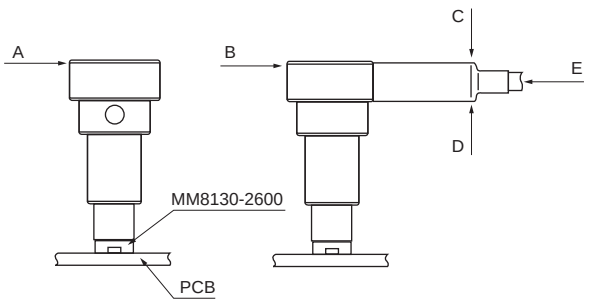

3. Usage Condition
   (1) Do not apply electrical voltage greater than specified in the catalog. It might cause degradation or destruction of the product. Even if it endures during a short time, long time qualification is not guaranteed.
   (2) Confirm that product perfomance is not influenced with any other components or materials which directly contact products.

4. Handling
   Do not apply excessive shock or load to subassembly products such as soldered printed circuit board in case handling or transporting.

⚠Note • This PDF catalog is downloaded from the website of Murata Manufacturing co., ltd. Therefore, it's specifications are subject to change or our products in it may be discontinued without advance notice. Please check with our sales representatives or product engineers before ordering.
• This PDF catalog has only typical specifications because there is no space for detailed specifications. Therefore, please approve our product specifications or transact the approval sheet for product specifications before ordering.

1 Package

■ Dimensions of Reel

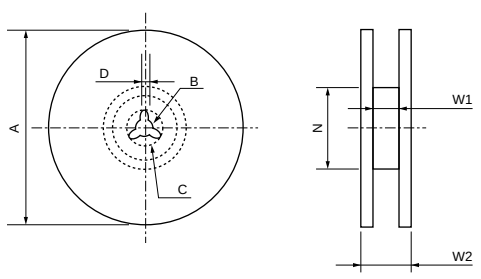

Part Number	A	B	C	D	N (min.)	W1	W2 (max.)
MM8130-2600RB8	330	13	21	2	Dia. 100	9.4	13.4
Tolerance	±2.0	±0.5	±0.8	±0.5	±1.0	±1.0	±1.0

(in mm)

■ Dimensions of Taping

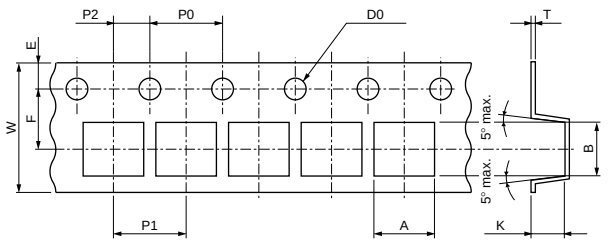

A	B	W	D0	E	F	K
2.8±0.1	2.8±0.1	8±0.2	Dia.1.5+0.1	1.75±0.1	3.5±0.1	1.6±0.1

P0	P1	P2	T
4±0.1	4±0.1	2±0.1	0.25±0.05

(in mm)

■ Minimum Quantity

MM8130-2600RB8: 330 mm dia.reel/8000 pcs.

MM8130-2600B: Bulk/free

⚠Note • This PDF catalog is downloaded from the website of Murata Manufacturing co., ltd. Therefore, it's specifications are subject to change or our products in it may be discontinued without advance notice. Please check with our sales representatives or product engineers before ordering.
• This PDF catalog has only typical specifications because there is no space for detailed specifications. Therefore, please approve our product specifications or transact the approval sheet for product specifications before ordering.

Microwave Coaxial Connectors

Microwave Coaxial Connectors with Switch SWD Type

■ Features

1. The coaxial connector with switch is very useful for characteristic measurement of hand held phone and microwave circuit.
2. It is possible to switch the line connection and disconnection easily by special probe.
3. Small size, low profile, size 3x3x1.75mm (LxWxH)
4. Excellent characteristics, low IL 0.2dB max. V.S.W.R. 1.3 max. Isolation 15dB min. (DC to 6GHz)
5. Surface mountable and reflow solderable
6. Tape package available

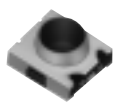

MM8430-2610

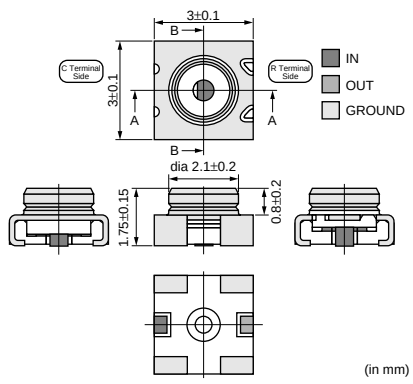

(in mm)

■ Applications

Cellular phone, W-LAN, Other wireless and measurement equipment

Part Number	Rated Voltage (Vrms)	Contact Resistance (max.) (ohm)	Withstand Voltage (Vrms)	Insulation Resistance (M ohm)	Durability (cycles)	Frequency Rating	Temperature Range (degree C)	VSWR	Insertion Loss (On) (dB)	Isolation (Off) (dB)	Inner Electrode (C)	Inner Electrode (R) (material)	Outer Electrode (material)
MM8430-2610	250	0.05	300 (AC)	500	500	to 6GHz	-40 to +85	1.2 max. (DC to 3GHz)	0.1 max. (DC to 3GHz)	20 min. (DC to 3GHz)	Stainless Steel Gold plated	Copper Alloy Gold plated	Copper Alloy Silver plated

Impedance: 50ohm

■ Measurement Probe Dimensions

MM126036

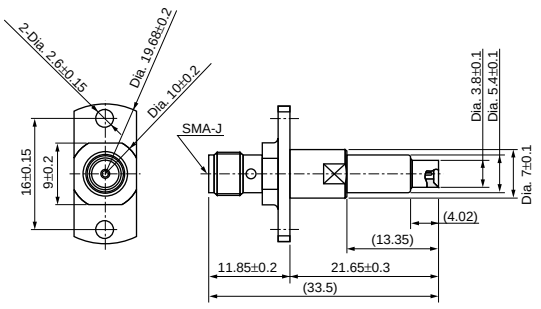

(in mm)

MXHS83QE3000

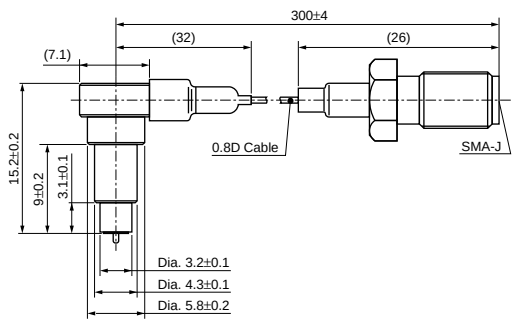

(in mm)

Continued on the following page.

⚠Note • This PDF catalog is downloaded from the website of Murata Manufacturing co., ltd. Therefore, it's specifications are subject to change or our products in it may be discontinued without advance notice. Please check with our sales representatives or product engineers before ordering.
• This PDF catalog has only typical specifications because there is no space for detailed specifications. Therefore, please approve our product specifications or transact the approval sheet for product specifications before ordering.

Continued from the preceding page.

■ Measurement Probe Dimensions

MXHS83QH3000

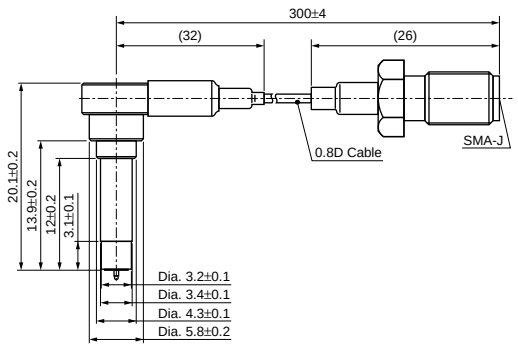

(in mm)

■ Structure

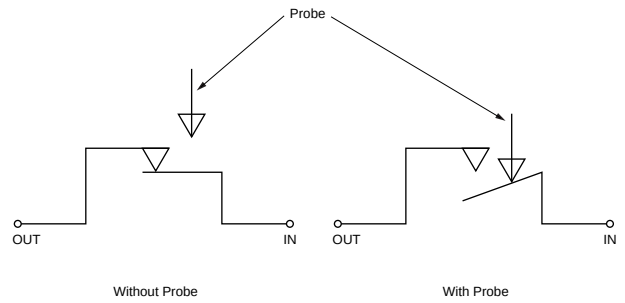

■ Standard Land Dimensions

1. Standard pattern dimensions

- I/O pattern should be designed to match 50 ohm impedance circuit.
- Typical PCB material is glass epoxy (εr=4.8). Thickness is 1.0mm.
- The solder resist should be printed except for the land pattern on the PCB.

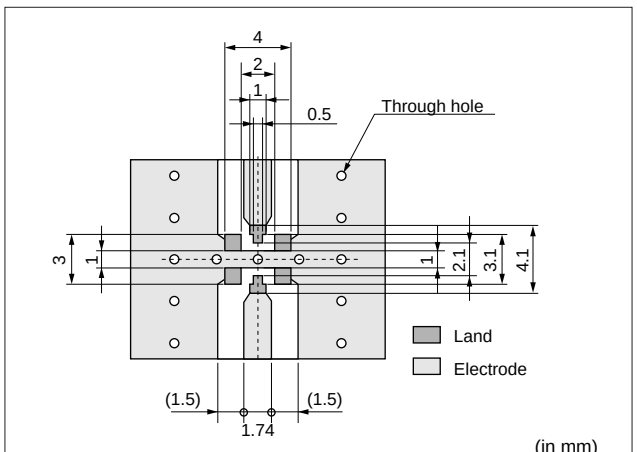

(in mm)

2. Standard solder stencil mask pattern

Follow Standard solder stencil mask pattern to avoid the possibility of solder being trapped under connector.

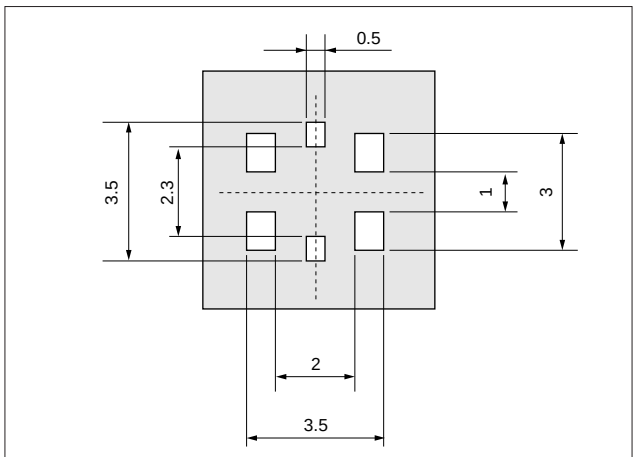

The Standard solder stencil mask pattern
(Mask thickness 0.15mm)

(in mm)

⚠Note • This PDF catalog is downloaded from the website of Murata Manufacturing co., ltd. Therefore, it's specifications are subject to change or our products in it may be discontinued without advance notice. Please check with our sales representatives or product engineers before ordering.
• This PDF catalog has only typical specifications because there is no space for detailed specifications. Therefore, please approve our product specifications or transact the approval sheet for product specifications before ordering.

Notice

■ Notice (Storage and Operating Condition)

1. Environment Conditions

(1) This product is designed for use in electrical equipment in the environment (temperature, humidity, atmospheric pressure, etc.) specified in this approval drawing. It may not be used in the following environments or under the following conditions:

(a) Ambient air containing corrosive gas (Chlorine gas, Hydrogen sulfide gas, Ammonia gas, Sulfuric acid gas, Nitric oxide gas, etc.)

(b) Ambient air containing volatile or combustible gas

(c) In liquid (water, oil, chemical solution, organic solvents, etc.)

(d) In environments with a high concentration of airborne particles

(e) In direct sunlight

(f) Dusty conditions

(g) In freezing

(h) Other environments similar to the above conditions

(2) Contact the manufacturer before using the product in any of the above environments or under any of the above conditions.

2. Storage

Store in manufacturer's package or tightly re-closed box with the following conditions. Use this product within 6 months after receipt. Check the terminal solderability before use if the product has been stored for more than 6 months.

Temperature: -10 to +40 degree C

Humidity: 15 to 85% RH

⚠Note • This PDF catalog is downloaded from the website of Murata Manufacturing co., ltd. Therefore, it's specifications are subject to change or our products in it may be discontinued without advance notice. Please check with our sales representatives or product engineers before ordering.
• This PDF catalog has only typical specifications because there is no space for detailed specifications. Therefore, please approve our product specifications or transact the approval sheet for product specifications before ordering.

Notice

■ Notice (Soldering and Mounting)

1. Reflow soldering
   Soldering must be carried out without exceeding the allowable soldering temperature and time shown within the shaded area of Figure "Allowable Temperature and Time of Reflow Soldering".
   In case the soldering is repeated, the maximum time in Figure "Allowable Temperature and Time of Reflow Soldering" should be accumulated time. The standard soldering conditions are shown in Figure "Reflow Soldering Standard Conditions".
   Follow standard solder stencil mask pattern to avoid the possibility of solder being trapped under connector.

2. Soldering by soldering iron
   Soldering by soldering iron should be carried out in accordance to the following conditions.

Pre-heating	Temperature	150℃
	Time	60 to 120 s.
Soldering	Temperature (at the tip of the soldering iron) less than 350℃	
	Time	less than 3 s.

3. We cannot warrant against mishaps caused by any use of this product that deviates from allowable temperature and time of reflow soldering.

4. In soldering, do not apply excessive mechanical force to terminals or leads greater than specified in the drawing.

5. Please note the following in case of soldering terminals or leads of the product.
   (1) Use Rosin based flux, but not with strong acid flux (Chlorine content should be less than 0.20wt%).
   (2) Flux should be thoroughly cleaned from connector to prevent possible deterioration of electrical characteristics.

6. Please mount this product at the position so that stress by wrap and/or bend of the PCB may not apply to it.

7. Please avoid the cleaning of this product.

Allowable Temperature and Time of Reflow Soldering

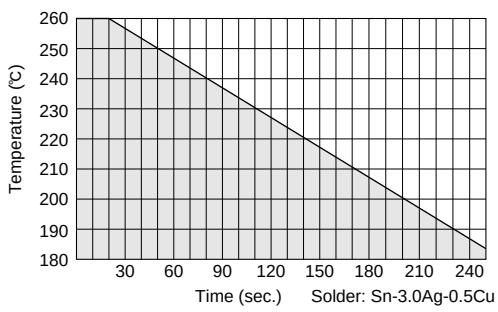

Reflow Soldering Standard Conditions

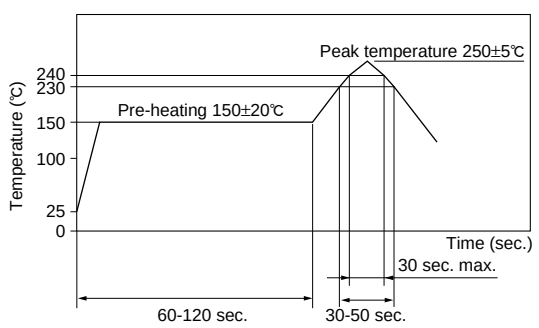

Measuring point of temperature: In-Out Terminals of the Device
Reflow Soldering: Both Convection and Infrared Rays
: Hot Air
: Hot Plate

Continued on the following page.

⚠Note • This PDF catalog is downloaded from the website of Murata Manufacturing co., ltd. Therefore, it's specifications are subject to change or our products in it may be discontinued without advance notice. Please check with our sales representatives or product engineers before ordering.
• This PDF catalog has only typical specifications because there is no space for detailed specifications. Therefore, please approve our product specifications or transact the approval sheet for product specifications before ordering.

Notice

Continued from the preceding page.

■ Notice (Handling)

1. Automatic Measurement Probe (MM126036)

- Automatic measurement probe (MM126036) should be used under conditions in Fig. 1 for good connection without any damages.
- The engagement strokes from the flange to the tip of probe is 18.28mm to 19.78mm with vertical (0±2°) direction.

Fig. 1 Insertion the Automatic Measurement Probe (MM126036) in Receptacle (MM8430-2610)

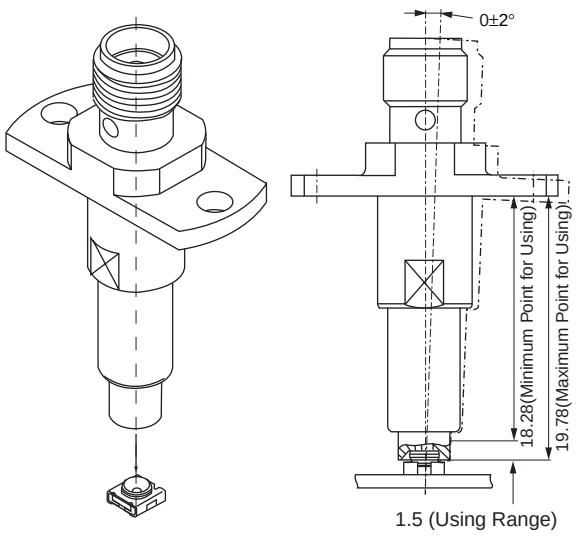

2. L Type Probe with Locking Function
(MXHS83QE3000, MXHS83QH3000)

- Avoid pulling cable when probe is locked into connector.
- Avoid twisting probe or cable when engaging or disengaging from connector.
- Mechanical stress:
The stress to the connector should be limited as figure shown right.
(1) Stress to the housing.
Stress A and B: 0.5N max.
(2) Stress to the outer sleeve.
Stress C: 0.6N max.
Stress D: 0.6N max.
(3) Cable pull strength.
Stress E: 0.5N max.

Mechanical stress after engagement

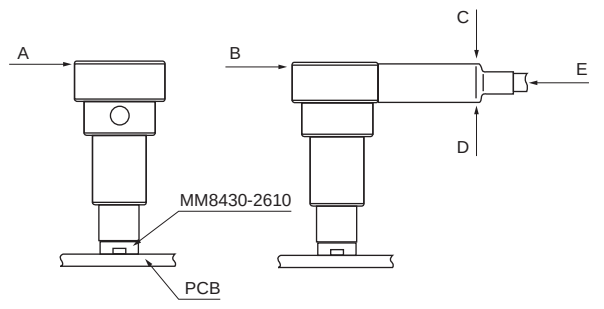

3. Usage Condition
(1) Do not apply electrical voltage greater than specified in the catalog. It might cause degradation or destruction of the product. Even if it endures during a short time, long time qualification is not guaranteed.
(2) Confirm that product performance is not influenced with any other components or materials which directly contact products.

4. Handling
Avoid excessive stress when handling and transporting printed circuit board after connector and/or assembly has been secured to PCB.

⚠Note • This PDF catalog is downloaded from the website of Murata Manufacturing co., ltd. Therefore, it's specifications are subject to change or our products in it may be discontinued without advance notice. Please check with our sales representatives or product engineers before ordering.
• This PDF catalog has only typical specifications because there is no space for detailed specifications. Therefore, please approve our product specifications or transact the approval sheet for product specifications before ordering.

Package

■ Dimensions of Reel

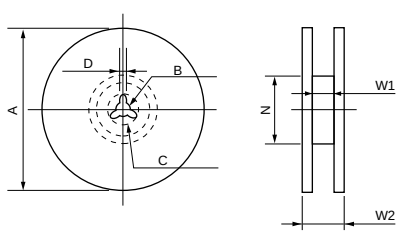

(in mm)

Murata Part Number	A	B	C	D	N (min.)	W1	W2 (max.)
MM8430-2610RA1	178	13	21	2	Dia. 50	13.5	18.5
MM8430-2610RB3	330	13	21	2	Dia. 50	13.5	18.5
TOLERANCE	±2.0	±0.5	±0.8	±0.5	–	±1.5	–

■ Dimensions of Taping

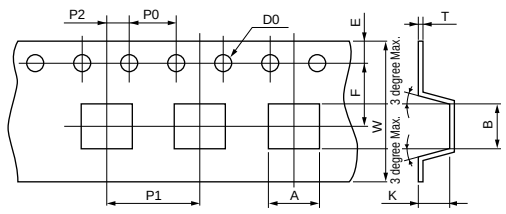

(in mm)

A	B	W	D0	E	F	K
3.4±0.1	3.4±0.1	12±0.2	Dia.1.5+0.1	1.75±0.1	5.5±0.1	2.0±0.15

P0	P1	P2	T
4±0.1	8±0.1	2±0.1	0.3±0.05

■ Minimum Quantity

MM8430-2610RA1: dia.180 mm reel/1000 pcs.
MM8430-2610RB3: dia.330 mm reel/3000 pcs.
MM8430-2610B: Bulk/free

⚠Note • This PDF catalog is downloaded from the website of Murata Manufacturing co., ltd. Therefore, it's specifications are subject to change or our products in it may be discontinued without advance notice. Please check with our sales representatives or product engineers before ordering.
• This PDF catalog has only typical specifications because there is no space for detailed specifications. Therefore, please approve our product specifications or transact the approval sheet for product specifications before ordering.

Microwave Coaxial Connectors

Ultra Miniature SMT HSC Type

■ Features

1. The mating height is only 1.2mm maximum by new mechanical design. Suitable for low profile design.
2. New mating mechanical desigh makes stable feeling connection.
3. Soft and ultra thin 0.81mm diameter flexible coaxial cables is available.
4. High performance with wide frequency range(DC to 6GHz). VSWR at 3GHz to 6GHz is 1.45 maximum.

■ Applications

Portable telephone, cordless telephone(analog and digital), GPS, and other microwave radio and measurement equipment.

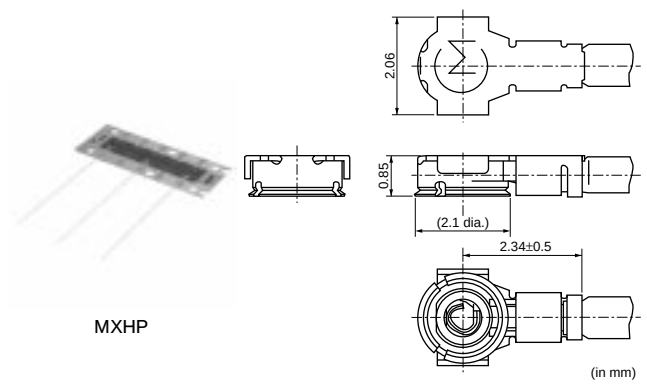

MXHP

(in mm)

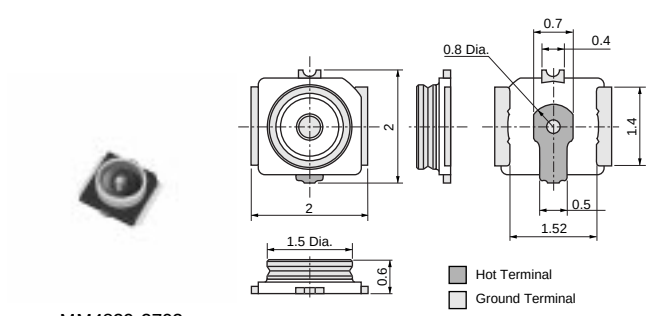

MM4829-2702

Tolerances Unless Otherwise Specified: ±0.2

(in mm)

Part Number	Rated Voltage (V)	Contact Resistance (max.) (ohm)	Withstanding Voltage (rms)	Insulation Resistance (min.) (M ohm)	Durability (cycles)	Frequency Rating (GHz)	Temperature Range (degree C)	VSWR	Center Contact	Outer Contact	Insulator
MM4829-2702	250	0.020	300 (AC)	500	30	to 6.0	-40 to +85	1.3 max. (DC to 3GHz)	Copper Alloy Gold plated	Copper Alloy Silver plated	Engineering plastic

Impedance: 50ohm

■ Measurement Adapter Dimensions (for Receptacle)

MM121490 (Hand measurement)

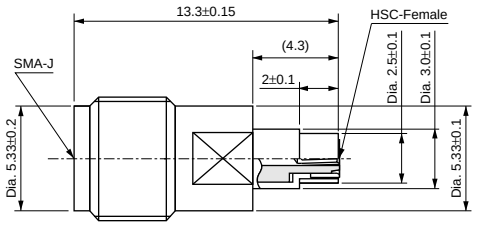

MM121491 (Automatic measurement)

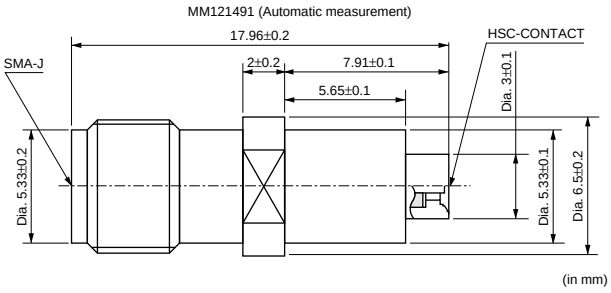

(in mm)

⚠Note • This PDF catalog is downloaded from the website of Murata Manufacturing co., ltd. Therefore, it's specifications are subject to change or our products in it may be discontinued without advance notice. Please check with our sales representatives or product engineers before ordering.
• This PDF catalog has only typical specifications because there is no space for detailed specifications. Therefore, please approve our product specifications or transact the approval sheet for product specifications before ordering.

■ Measurement Adapter Dimensions (for Cable Assembly)

MM121500 (Hand measurement)

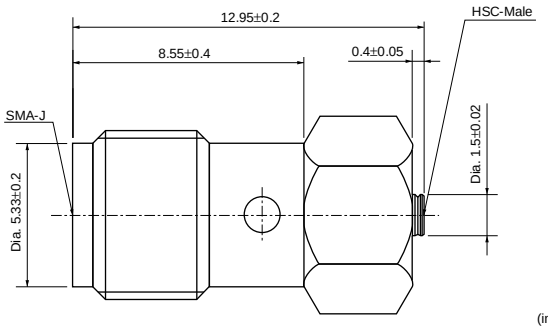

(in mm)

■ Cable Length Tolerance

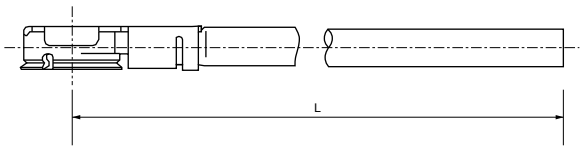

Cable Length L (mm)		Dimensional Tolerance (mm)
Over	Less than	
20	100	±3
100	500	±4
500	1000	±10
1000	–	+2% of L –0% of L

3

■ Disengagement Tool (Part Number: M19100)

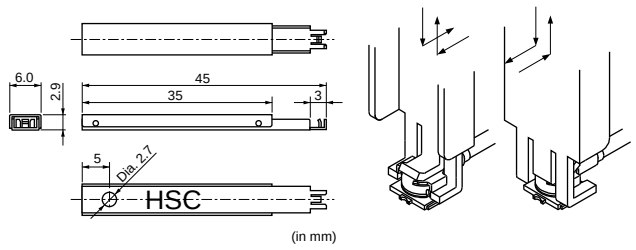

(in mm)

■ Profile Dimensions

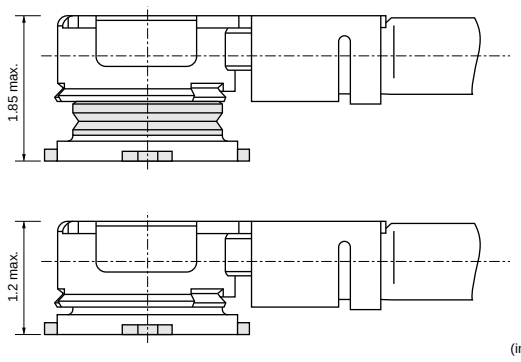

(in mm)

Continued on the following page.

⚠Note • This PDF catalog is downloaded from the website of Murata Manufacturing co., ltd. Therefore, it's specifications are subject to change or our products in it may be discontinued without advance notice. Please check with our sales representatives or product engineers before ordering.
• This PDF catalog has only typical specifications because there is no space for detailed specifications. Therefore, please approve our product specifications or transact the approval sheet for product specifications before ordering.

Continued from the preceding page.

■ Land Pattern Dimensions

1. Standard pattern dimensions

- I/O pattern should be designed to match 50 ohm impedance circuit.
- Typical PCB material is glass epoxy (εr=4.8). Thickness is 1.0mm.
- The solder resist should be printed except for the land pattern on the PCB.

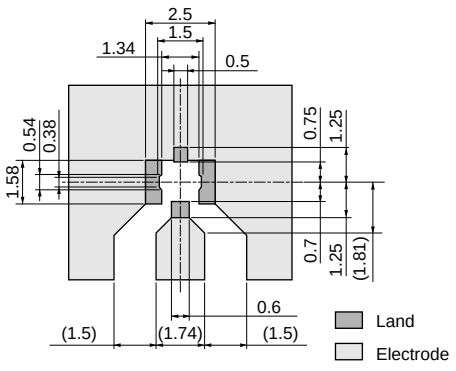

(in mm)

2. Standard solder stencil mask pattern

Follow Standard solder stencil mask pattern to avoid the possibility of solder being trapped under connector.

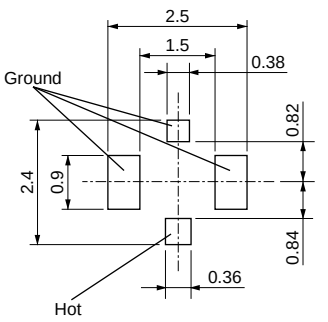

The standard solder stencil mask drawing
(Mask thickness 0.12mm)

(in mm)

⚠Note • This PDF catalog is downloaded from the website of Murata Manufacturing co., ltd. Therefore, it's specifications are subject to change or our products in it may be discontinued without advance notice. Please check with our sales representatives or product engineers before ordering.
• This PDF catalog has only typical specifications because there is no space for detailed specifications. Therefore, please approve our product specifications or transact the approval sheet for product specifications before ordering.

Notice

■ Notice (Storage and Operation Condition)

1. Environment Conditions

(1) This product is designed for use in electrical equipment in the environment (temperature, humidity, atmospheric pressure, etc.) specified in this approval drawing. It may not be used in the following environments or under the following conditions:

(a) Ambient air containing corrosive gas (Chlorine gas, Hydrogen sulfide gas, Ammonia gas, Sulfuric acid gas, Nitric oxide gas, etc.)

(b) Ambient air containing volatile or combustible gas

(c) In liquid (water, oil, chemical solution, organic solvents, etc.)

(d) In environments with a high concentration of airborne particles

(e) In direct sunlight

(f) Dusty conditions

(g) In freezing

(h) Other environments similar to the above conditions

(2) Contact the manufacturer before using the product in any of the above environments or under any of the above conditions.

2. Storage

Store in manufacturer's package or tightly re-closed box with the following conditions. Use this product within 6 months after receipt. Check the terminal solderability before use if the product has been stored for more than 6 months.

Temperature: -10 to +40 degree C

Humidity: 15 to 85% RH

⚠Note • This PDF catalog is downloaded from the website of Murata Manufacturing co., ltd. Therefore, it's specifications are subject to change or our products in it may be discontinued without advance notice. Please check with our sales representatives or product engineers before ordering.
• This PDF catalog has only typical specifications because there is no space for detailed specifications. Therefore, please approve our product specifications or transact the approval sheet for product specifications before ordering.

Notice

■ Notice (Soldering and Mounting)

1. Reflow soldering
   Soldering must be carried out without exceeding the allowable soldering temperature and time shown within the shaded area of Figure "Allowable Temperature and Time of Reflow Soldering".
   In case the soldering is repeated, the maximum time in Figure "Allowable Temperature and Time of Reflow Soldering" should be accumulated time. The standard soldering conditions are shown in Figure "Reflow Soldering Standard Conditions".
   Use the Pattern and Metal mask pattern is illustrated in details.
   Follow standard solder stencil mask pattern to avoid the possibility of solder being trapped under connector.

2. Soldering by soldering iron
   Soldering by soldering iron should be carried out in accordance to the following conditions.

Pre-heating	Temperature	150℃
	Time	60 to 120 s.
Soldering	Temperature (at the tip of the soldering iron) less than 350℃	
	Time	less than 3 s.

3. We cannot warrant against mishaps caused by any use of this product that deviates from allowable temperature and time of reflow soldering.

4. In soldering, do not apply excessive mechanical force to terminals or leads greater than specified in the drawing.

5. Please note the following in case of soldering terminals or leads of the product.
   (1) Use Rosin based flux, but not with strong acid flux (Chlorine content should be less than 0.20wt%).
   (2) Flux should be thoroughly cleaned from connector to prevent possible deterioration of electrical characteristics.

6. Please mount this product at the position so that stress by wrap and/or bend of the PCB may not apply to it.

7. Please dry out this product immediately after soldering and cleaning.

Allowable Temperature and Time of Reflow Soldering

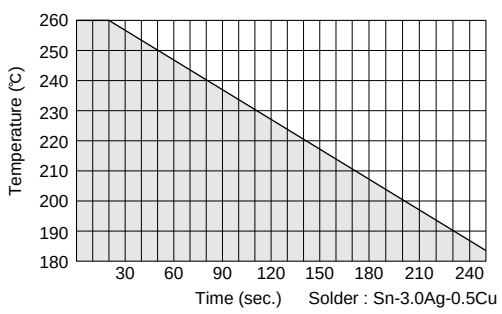

Reflow Soldering Standard Conditions

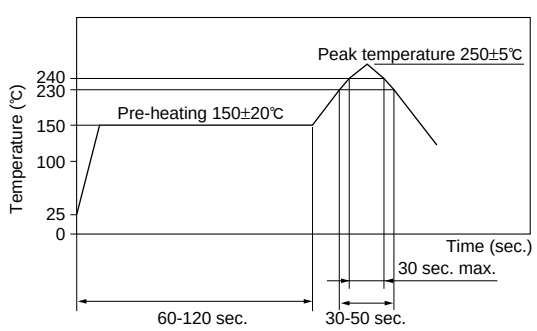

Measuring point of temperature : In-Out Terminals of the Device
Reflow Soldering : Both Convection and Infrared Rays
: Hot Air
: Hot Plate

Continued on the following page.

⚠Note • This PDF catalog is downloaded from the website of Murata Manufacturing co., ltd. Therefore, it's specifications are subject to change or our products in it may be discontinued without advance notice. Please check with our sales representatives or product engineers before ordering.
• This PDF catalog has only typical specifications because there is no space for detailed specifications. Therefore, please approve our product specifications or transact the approval sheet for product specifications before ordering.

Notice

Continued from the preceding page.

■ Notice (Handling)

1. Usage Condition

(1) Do not apply electrical voltage greater than specified in the drawing. It might cause degradation or destruction of the product. Even if it endures during a short time, long time qualification is not guaranteed.

(2) Confirm product's performance is not influenced by contact of other components.

(3) Please contact the manufacturer beforehand, if the product is to be used in frequently bent position.

2. Handling

(1) Avoid excessive stress when handling and transporting printed circuit board after connector and/or assembly has been secured to PCB.

(2) Do not try to pull the cable, when a connector with a coaxial cable is handled.

(3) Disregarding the following notes could cause mechanical damage and/or poor electrical performance.

3. Handling Instructions

(1) Cable is designed to fit only with MM4829-2702 receptacle. Any other receptacle cannot be used with this cable.

(2) Disengagement:
Use tool P/N M19100 to insert or remove cable in a vertical direction from receptacle. Avoid pulling only the cable to prevent cable damage.

(3) Avoid twisting probe or cable when engaging or disengaging from connector.

(4) Mechanical stress:
The stress to the connector should be limited as shown in Figure 1.

(a) Stress to the housing.
Stress A and B: 5.0N max.

(b) Stress to the outer sleeve.
Stress C: 1.0N max.
Stress D: 1.0N max.

(c) Cable pull strength.
Stress E: 5.0N max.

Figure 1. Mechanical stress after engagement

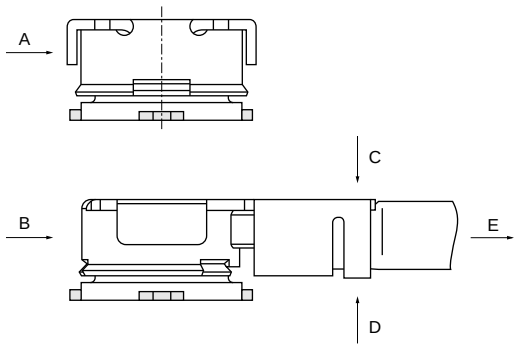

⚠Note • This PDF catalog is downloaded from the website of Murata Manufacturing co., ltd. Therefore, it's specifications are subject to change or our products in it may be discontinued without advance notice. Please check with our sales representatives or product engineers before ordering.
• This PDF catalog has only typical specifications because there is no space for detailed specifications. Therefore, please approve our product specifications or transact the approval sheet for product specifications before ordering.

Package

■ Dimensions of Reel

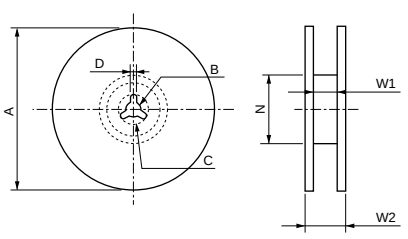

(in mm)

Murata Part Number	A	B	C	D	N (min.)	W1	W2 (max.)
MM4829-2702RA4	180 +0/-3	13	21	2	Dia. 60 +1/0	9 ±0.3	11.4
MM4829-2702RB0	330	13	21	2	Dia. 100	9.4	13.4
TOLERANCE	±2.0	±0.2	±0.8	±0.5	±1.0	±1.0	±1.0

■ Dimensions of Taping

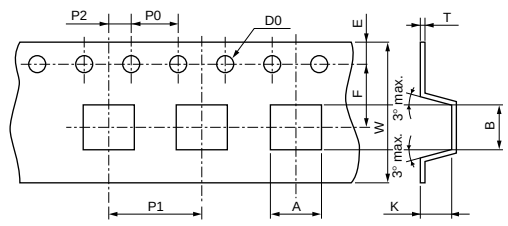

(in mm)

A	B	W	D0	E	F	K
2.35±0.1	2.35±0.1	8±0.2	Dia.1.5 $^{+0.1}_{-0}$	1.75±0.1	3.5±0.1	0.75±0.15

P0	P1	P2	T
4±0.1	4±0.1	2±0.1	0.25±0.05

■ Minimum Quantity

MM4829-2702RA4: 180 mm dia. reel/4000 pcs.
MM4829-2702RB0: 330 mm dia. reel/10000 pcs.
MM4829-2702B: Bulk/free

⚠Note • This PDF catalog is downloaded from the website of Murata Manufacturing co., ltd. Therefore, it's specifications are subject to change or our products in it may be discontinued without advance notice. Please check with our sales representatives or product engineers before ordering.
• This PDF catalog has only typical specifications because there is no space for detailed specifications. Therefore, please approve our product specifications or transact the approval sheet for product specifications before ordering.

Microwave Coaxial Connectors

Miniature SMT GSC Type

■ Features

1. The mating height is only 2mm maximum by new mechanical design. Suitable for low profile design.
2. New mating mechanical desigh makes stable feeling connection.
3. Soft and ultra thin 0.8mm diameter flexible coaxial cables is available.
4. High performance with wide frequency range(DC to 6GHz). VSWR at DC to 3GHz is 1.2 maximum. VSWR at 3GHz to 6GHz is 1.3 maximum.

■ Applications

Portable telephone, cordless telephone(analog and digital), GPS, and other microwave radio and measurement equipment.



MXTK

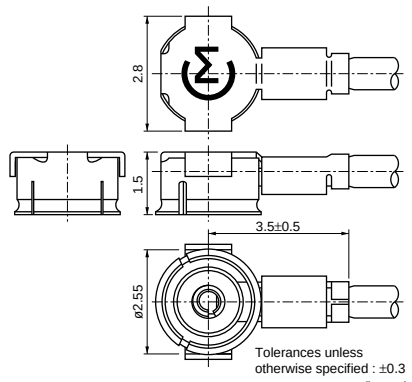

Tolerances unless otherwise specified : ±0.3
(in mm)



MM9329-2700

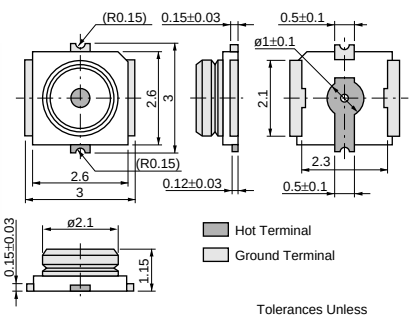

Tolerances Unless Otherwise Specified: ±0.2
(in mm)

Part Number	Rated Voltage (V)	Contact Resistance (max.) (ohm)	Withstanding Voltage (rms)	Insulation Resistance (min.) (M ohm)	Durability (cycles)	Frequency Rating (GHz)	Temperature Range (degree C)	VSWR	Center Contact	Outer Contact	Insulator
MM9329-2700	250	0.015	300 (AC)	500	100	to 6.0	-40 to +90	1.2 max. (DC to 3GHz)	Copper Alloy Gold plated	Copper Alloy Silver plated	Engineering plastic

Impedance: 50ohm

■ Measurement Adapter Dimensions (for Receptacle)

MM121470 (Hand measurement)

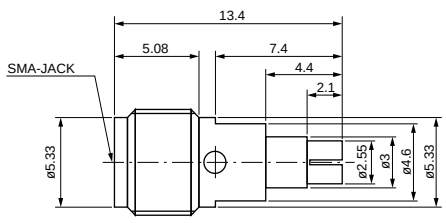

MM121471 (Automatic measurement)

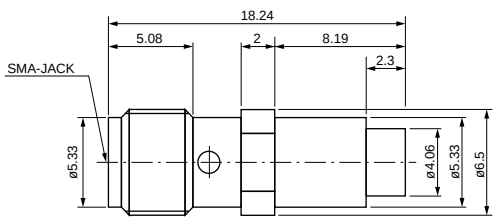

(in mm)

Continued on the following page.

⚠Note • This PDF catalog is downloaded from the website of Murata Manufacturing co., ltd. Therefore, it's specifications are subject to change or our products in it may be discontinued without advance notice. Please check with our sales representatives or product engineers before ordering.
• This PDF catalog has only typical specifications because there is no space for detailed specifications. Therefore, please approve our product specifications or transact the approval sheet for product specifications before ordering.

Continued from the preceding page.

■ Measurement Adapter Dimensions (for Cable Assembly)

MM121480

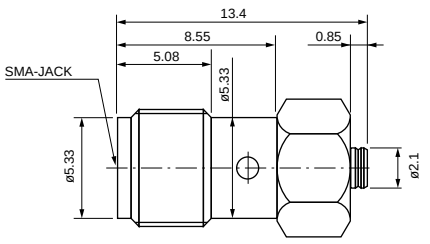

(in mm)

■ Cable Length Tolerance

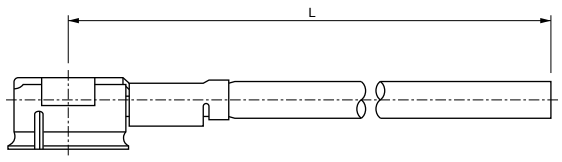

Cable Length L (mm) (∗)		Dimensional tolerance (mm)
Over	Till	
40	100	±3
100	500	±4
500	1000	±10
1000	–	+2% of L –0% of L

∗L must be 20mm Min.

■ Disengagement Tool (Part Number: M22001)

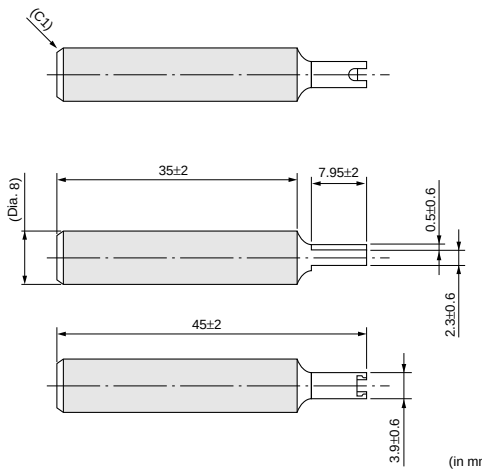

(in mm)

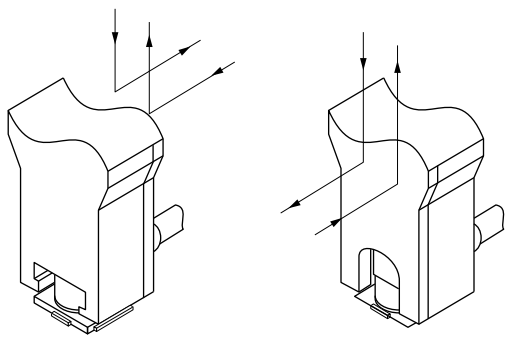

■ Profile Dimensions

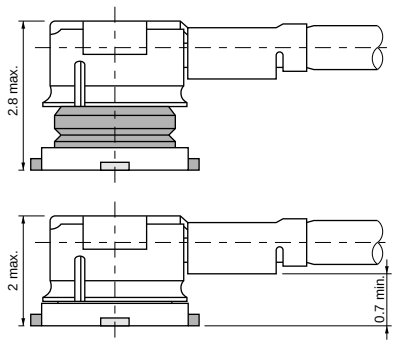

(in mm)

Continued on the following page.

⚠Note • This PDF catalog is downloaded from the website of Murata Manufacturing co., ltd. Therefore, it's specifications are subject to change or our products in it may be discontinued without advance notice. Please check with our sales representatives or product engineers before ordering.
• This PDF catalog has only typical specifications because there is no space for detailed specifications. Therefore, please approve our product specifications or transact the approval sheet for product specifications before ordering.

Continued from the preceding page.

■ Land Pattern Dimensions

1. Standard pattern dimensions

- I/O pattern should be designed to match 50 ohm impedance circuit.
- Typical PCB material is glass epoxy (εr=4.8). Thickness is 1.0mm
- The solder resist should be printed except for the land pattern on the PCB.

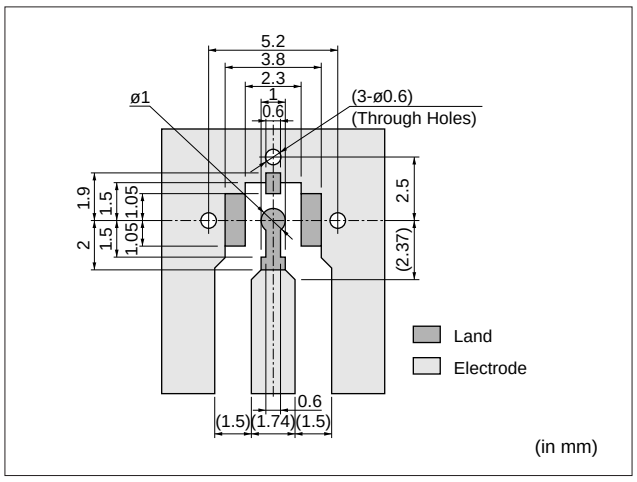

2. Standard solder stencil mask pattern

Follow Standard solder stencil mask pattern to avoid the possibility of solder being trapped under connector.

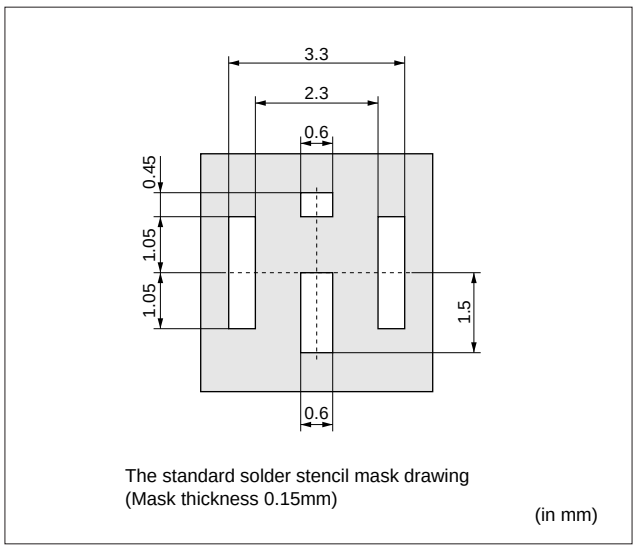

The standard solder stencil mask drawing
(Mask thickness 0.15mm)

(in mm)

⚠Note • This PDF catalog is downloaded from the website of Murata Manufacturing co., ltd. Therefore, it's specifications are subject to change or our products in it may be discontinued without advance notice. Please check with our sales representatives or product engineers before ordering.
• This PDF catalog has only typical specifications because there is no space for detailed specifications. Therefore, please approve our product specifications or transact the approval sheet for product specifications before ordering.

Notice

■ Notice (Storage and Operation Condition)

1. Environment Conditions

(1) This product is designed for use in electrical equipment in the environment (temperature, humidity, atmospheric pressure, etc.) specified in this approval drawing. It may not be used in the following environments or under the following conditions:

(a) Ambient air containing corrosive gas (Chlorine gas, Hydrogen sulfide gas, Ammonia gas, Sulfuric acid gas, Nitric oxide gas, etc.)

(b) Ambient air containing volatile or combustible gas

(c) In liquid (water, oil, chemical solution, organic solvents, etc.)

(d) In environments with a high concentration of airborne particles

(e) In direct sunlight

(f) Dusty conditions

(g) In freezing

(h) Other environments similar to the above conditions

(2) Contact the manufacturer before using the product in any of the above environments or under any of the above conditions.

2. Storage

Store in manufacturer's package or tightly re-closed box with the following conditions. Use this product within 6 months after receipt. Check the terminal solderability before use if the product has been stored for more than 6 months.

Temperature: -10 to +40 degree C

Humidity: 15 to 85% RH

⚠Note • This PDF catalog is downloaded from the website of Murata Manufacturing co., ltd. Therefore, it's specifications are subject to change or our products in it may be discontinued without advance notice. Please check with our sales representatives or product engineers before ordering.
• This PDF catalog has only typical specifications because there is no space for detailed specifications. Therefore, please approve our product specifications or transact the approval sheet for product specifications before ordering.

Notice

■ Notice (Soldering and Mounting)

1. Reflow soldering
   Soldering must be carried out without exceeding the allowable soldering temperature and time shown within the shaded area of Figure "Allowable Temperature and Time of Reflow Soldering".
   In case the soldering is repeated, the maximum time in Figure "Allowable Temperature and Time of Reflow Soldering" should be accumulated time. The standard soldering conditions are shown in Figure "Reflow Soldering Standard Conditions".
   Follow recommended solder stencil mask pattern to avoid the possibility of solder being trapped under connector.

2. Soldering by soldering iron
   Soldering by soldering iron should be carried out in accordance to the following conditions.

Pre-heating	Temperature	150℃
	Time	60 to 120 s.
Soldering	Temperature (at the tip of the soldering iron) less than 350℃	
	Time	less than 3 s.

3. We cannot warrant against mishaps caused by any use of this product that deviates from allowable temperature and time of reflow soldering.

4. In soldering, do not apply excessive mechanical force to terminals or leads greater than specified in the drawing.

5. Please note the following in case of soldering terminals or leads of the product.
   (1) Use Rosin based flux, but not with strong acid flux (Chlorine content should be less than 0.20wt%).
   (2) Flux should be thoroughly cleaned from connector to prevent possible deterioration of electrical characteristics.

6. Please mount this product at the position so that stress by wrap and/or bend of the PCB may not apply to it.

7. Please dry out this product immediately after soldering and cleaning.

Allowable Temperature and Time of Reflow Soldering

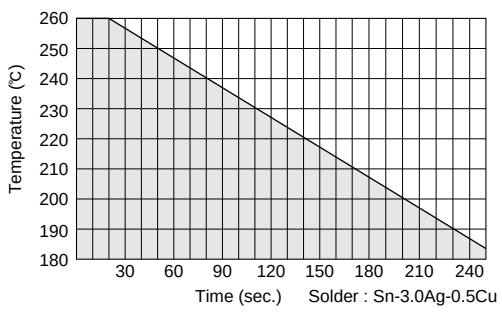

Reflow Soldering Standard Conditions

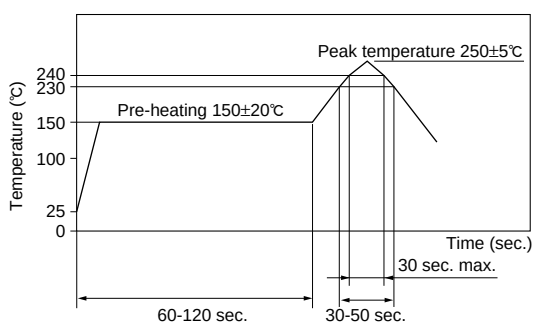

Measuring point of temperature : In-Out Terminals of the Device
Reflow Soldering : Both Convection and Infrared Rays
: Hot Air
: Hot Plate

Continued on the following page.

⚠Note • This PDF catalog is downloaded from the website of Murata Manufacturing co., ltd. Therefore, it's specifications are subject to change or our products in it may be discontinued without advance notice. Please check with our sales representatives or product engineers before ordering.
• This PDF catalog has only typical specifications because there is no space for detailed specifications. Therefore, please approve our product specifications or transact the approval sheet for product specifications before ordering.

Notice

Continued from the preceding page.

■ Notice (Handling)

1. Usage Condition

(1) Do not apply electrical voltage greater than specified in the drawing. It might cause degradation or destruction of the product. Even if it endures during a short time, long time qualification is not guaranteed.

(2) Confirm product's performance is not influenced by contact of other components.

(3) Please contact the manufacturer beforehand, if the product is to be used in frequently bent position.

2. Handling

(1) Avoid excessive stress when handling and transporting printed circuit board after connector and/or assembly has been secured to PCB.

(2) Do not try to pull the cable, when a connector with a coaxial cable is handled.

(3) Disregarding the following notes could cause mechanical damage and/or poor electrical performance.

3. Handling Instructions

(1) Cable is designed to fit only with MM9329-2700 receptacle. Any other receptacle cannot be used with this cable.

(2) Disengagement:
Use tool P/N M22001 to insert or remove cable in a vertical direction from receptacle. Avoid pulling only the cable to prevent cable damage.

(3) Avoid twisting probe or cable when engaging or disengaging from connector.

(4) Mechanical stress:
The stress to the connector should be limited as shown in Figure 1.
(a) Stress to the housing.
Stress A and B: 5.0N max.
(b) Stress to the outer sleeve.
Stress C: 3.0N max.
Stress D: 2.0N max.
(c) Cable pull strength.
Stress E: 5.0N max.

Figure 1. Mechanical Stress after Engagement

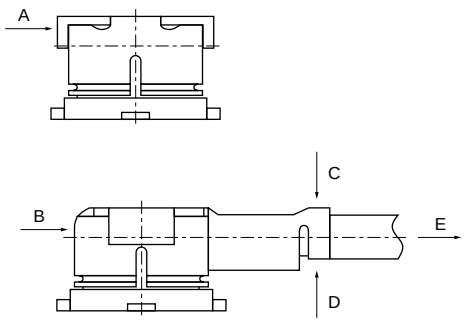

⚠Note • This PDF catalog is downloaded from the website of Murata Manufacturing co., ltd. Therefore, it's specifications are subject to change or our products in it may be discontinued without advance notice. Please check with our sales representatives or product engineers before ordering.
• This PDF catalog has only typical specifications because there is no space for detailed specifications. Therefore, please approve our product specifications or transact the approval sheet for product specifications before ordering.

Package

■ Dimensions of Reel

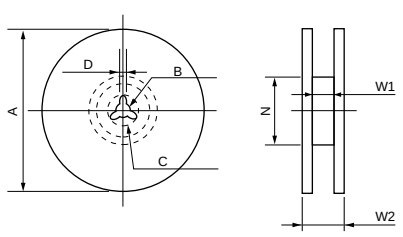

(in mm)

Murata Part Number	A	B	C	D	N (min.)	W1	W2 (max.)
MM9329-2700RA1	178	13	21	2	Dia. 50	13.5	18.5
MM9329-2700RB5	330	13	21	2	Dia. 50	13.5	18.5
TOLERANCE	±2.0	±0.5	±0.8	±0.5	–	±1.5	–

■ Dimensions of Taping

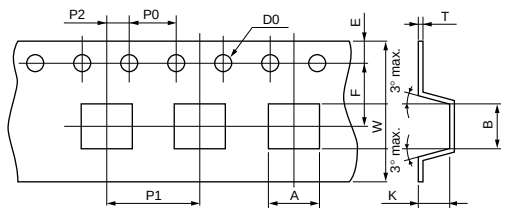

(in mm)

A	B	W	D0	E	F	K
3.4±0.1	3.4±0.1	12±0.2	Dia.1.5 $^{+0.1}_{-0}$	1.75±0.1	5.5±0.1	1.25±0.15

P0	P1	P2	T
4±0.1	8±0.1	2±0.1	0.3±0.05

■ Minimum Quantity

MM9329-2700RA1: dia.180 mm reel/1000 pcs.
MM9329-2700RB5: dia.330 mm reel/5000 pcs.
MM9329-2700B: Bulk/free

⚠Note • This PDF catalog is downloaded from the website of Murata Manufacturing co., ltd. Therefore, it's specifications are subject to change or our products in it may be discontinued without advance notice. Please check with our sales representatives or product engineers before ordering.
• This PDF catalog has only typical specifications because there is no space for detailed specifications. Therefore, please approve our product specifications or transact the approval sheet for product specifications before ordering.

Microwave Coaxial Connectors

SMT FSC Type

■ Features

1. High engagement
2. Miniature (LxWxH: 3.4x3.4x1.5mm) for High density mounting
3. Low profile (3.0mm max.)
4. SMD and reflow soldering applicable
5. Taping package applicable
6. Mountable by automatic placer
7. High performance (V.S.W.R. 1.3 max. at 3GHz)
8. Matched with ultra-thin FEP coaxial cables (0.8mm dia)

■ Applications

Portable telephone, mobile telephone, cordless telephone, GPS, and other microwave radio and measurement equipment.

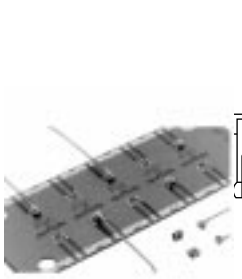

MXFG76_/MXFK81_

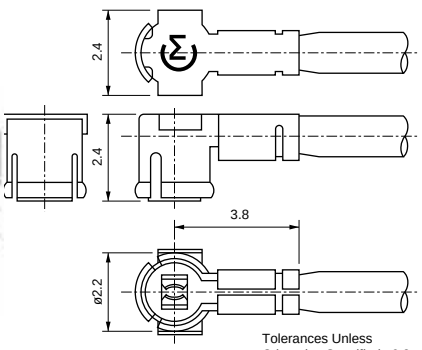

Tolerances Unless Otherwise Specified:±0.3

(in mm)



MM7329-2700

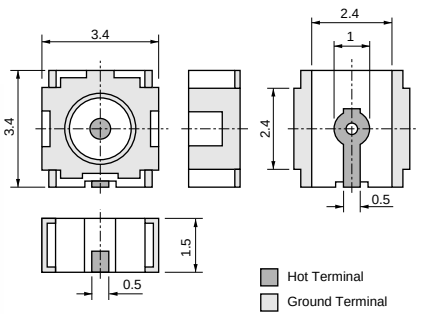

Tolerances Unless Otherwise Specified:±0.2

(in mm)

(in mm)



MM7329-2702

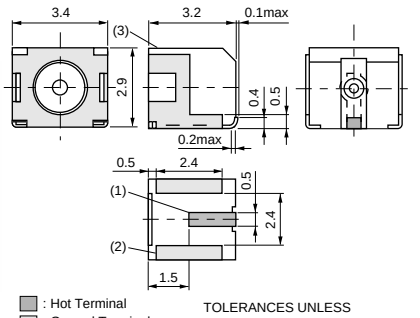

TOLERANCES UNLESS OTHERWISE SPECIFIED : ±0.2

(in mm)

Part Number	Rated Voltage (V)	Contact Resistance (max.) (ohm)	Withstanding Voltage (rms)	Insulation Resistance (min.) (M ohm)	Durability (cycles)	Frequency Rating (GHz)	Temperature Range (degree C)	VSWR	Center Contact	Outer Contact	Insulator
MM7329-2700	250	0.015	300 (AC)	500	50	to 3.0	-40 to +90	1.3 max.	Copper Alloy Gold plated	Copper Alloy Gold plated	Engineering plastic
MM7329-2702	250	0.015	300 (AC)	500	50	to 3.0	-40 to +90	1.3 max.	Copper Alloy Gold plated	Copper Alloy Gold plated	Engineering plastic

Impedance: 50ohm

⚠Note • This PDF catalog is downloaded from the website of Murata Manufacturing co., ltd. Therefore, it's specifications are subject to change or our products in it may be discontinued without advance notice. Please check with our sales representatives or product engineers before ordering.
• This PDF catalog has only typical specifications because there is no space for detailed specifications. Therefore, please approve our product specifications or transact the approval sheet for product specifications before ordering.

■ Measurement Adapter Dimensions

for Receptacle

MM121454 (For FSC type receptacle)

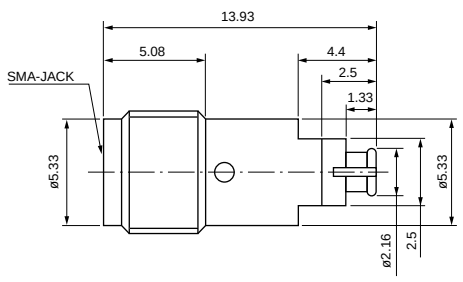

(in mm)

for Cable Assembly

MM121460 (For FSC type cable assembly)

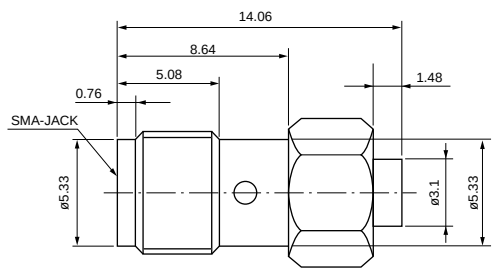

(in mm)

■ Land Pattern Dimensions

MM7329-2700B

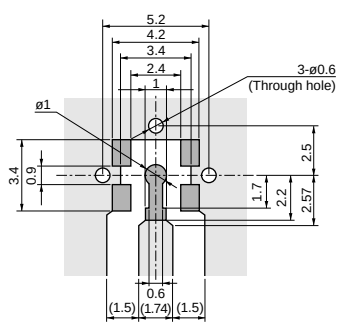

(in mm)

(Note) · Pattern should be designed to match 50 ohm impedance circuit.
· Typical PCB material is glass epoxy (εr=4.8). Thickness is 1.0mm.
· The solder resist should be printed except for the land pattern on the PCB.

MM7329-2702B

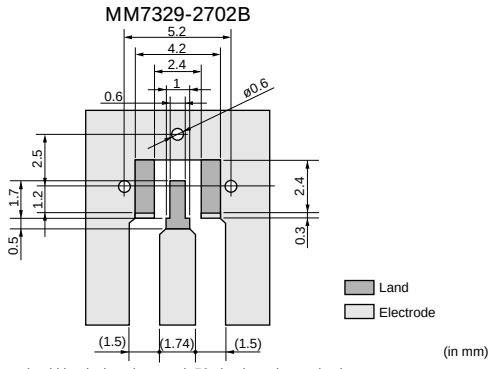

(in mm)

(Note) · Pattern should be designed to match 50 ohm impedance circuit.
· Typical PCB material is glass epoxy (εr=4.8). Thickness is 1.0mm.
· The solder resist should be printed except for the land pattern on the PCB.

■ Cable Length Tolerance

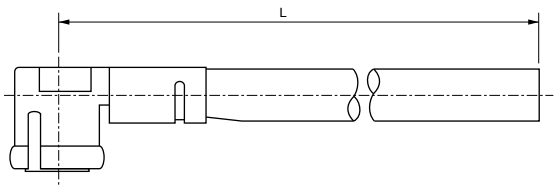

Cable Length L(mm)(∗)		Dimensional tolerance(mm)
Over	Till	
40	100	± 3
100	500	± 4
500	1000	±10
1000	–	+2% of L –0% of L

∗L must be 40mm Min.

■ Profile Dimensions

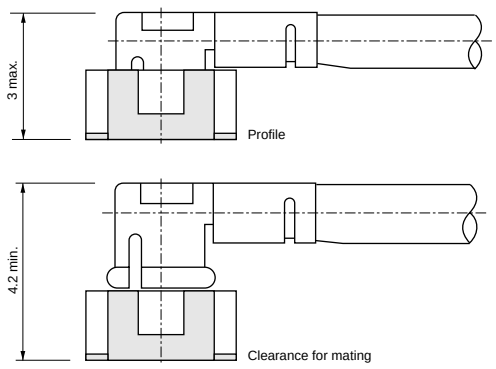

(in mm)

Continued on the following page.

⚠Note • This PDF catalog is downloaded from the website of Murata Manufacturing co., ltd. Therefore, it's specifications are subject to change or our products in it may be discontinued without advance notice. Please check with our sales representatives or product engineers before ordering.
• This PDF catalog has only typical specifications because there is no space for detailed specifications. Therefore, please approve our product specifications or transact the approval sheet for product specifications before ordering.

Continued from the preceding page.

■ Disengagement Tool

M19000 (for MM7329-2700)

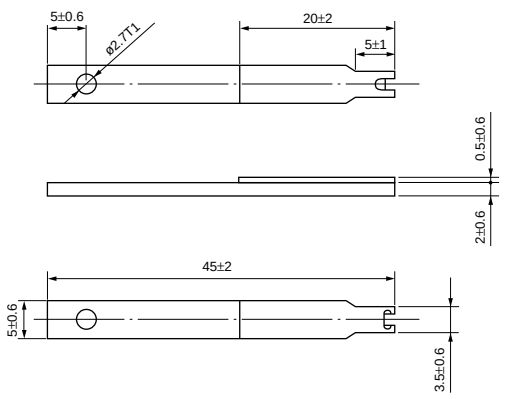

How to use tool (for MM7329-2700)

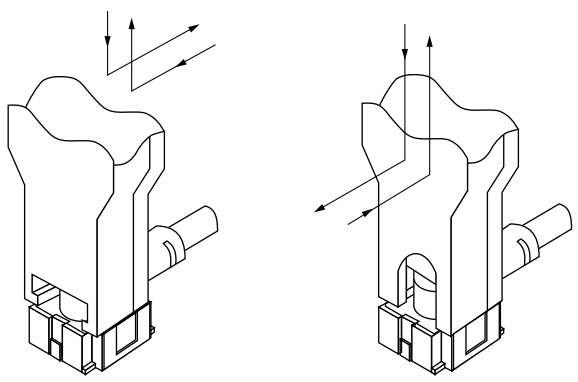

(in mm)

M19004 (for MM7329-2702)

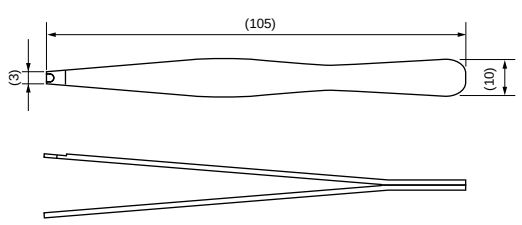

How to use tool (for MM7329-2702)

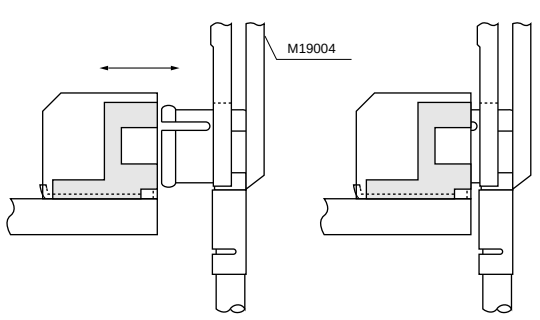

(in mm)

⚠Note • This PDF catalog is downloaded from the website of Murata Manufacturing co., ltd. Therefore, it's specifications are subject to change or our products in it may be discontinued without advance notice. Please check with our sales representatives or product engineers before ordering.
• This PDF catalog has only typical specifications because there is no space for detailed specifications. Therefore, please approve our product specifications or transact the approval sheet for product specifications before ordering.

Notice

■ Notice (Storage and Operating Condition)

1. Environment Conditions

(1) This product is designed for use in electrical equipment in the environment (temperature, humidity, atmospheric pressure, etc.) specified in this approval drawing. It may not be used in the following environments or under the following conditions:

(a) Ambient air containing corrosive gas (Chlorine gas, Hydrogen sulfide gas, Ammonia gas, Sulfuric acid gas, Nitric oxide gas, etc.)

(b) Ambient air containing volatile or combustible gas

(c) In liquid (water, oil, chemical solution, organic solvents, etc.)

(d) In environments with a high concentration of airborne particles

(e) In direct sunlight

(f) Dusty conditions

(g) In freezing

(h) Other environments similar to the above conditions

(2) Contact the manufacturer before using the product in any of the above environments or under any of the above conditions.

2. Storage

Store in manufacturer's package or tightly re-closed box with the following conditions. Use this product within 6 months after receipt. Check the terminal solderability before use if the product has been stored for more than 6 months.

Temperature: -10 to +40 degree C

Humidity: 15 to 85% RH

⚠Note • This PDF catalog is downloaded from the website of Murata Manufacturing co., ltd. Therefore, it's specifications are subject to change or our products in it may be discontinued without advance notice. Please check with our sales representatives or product engineers before ordering.
• This PDF catalog has only typical specifications because there is no space for detailed specifications. Therefore, please approve our product specifications or transact the approval sheet for product specifications before ordering.

Notice

■ Notice (Soldering and Mounting)

1. Reflow soldering
   Soldering must be carried out without exceeding the allowable soldering temperature and time shown within the shaded area of Figure "Allowable Temperature and Time of Reflow Soldering".
   In case the soldering is repeated, the maximum time in Figure "Allowable Temperature and Time of Reflow Soldering" should be accumulated time. The standard soldering conditions are shown in Figure "Reflow Soldering Standard Conditions".
   Follow Standard pattern dimensions.

2. Soldering by soldering iron
   Soldering by soldering iron should be carried out in accordance to the following conditions.

Pre-heating	Temperature	150℃
	Time	60 to 120 s.
Soldering	Temperature (at the tip of the soldering iron) less than 350℃	
	Time	less than 3 s.

3. We cannot warrant against mishaps caused by any use of this product that deviates from allowable temperature and time of reflow soldering.

4. In soldering, do not apply excessive mechanical force to terminals or leads greater than specified in the drawing.

5. Please note the following in case of soldering terminals or leads of the product.
   (1) Use Rosin based flux, but not with strong acid flux (Chlorine content should be less than 0.20wt%).
   (2) Flux should be thoroughly cleaned from connector to prevent possible deterioration of electrical characteristics.

6. Please mount this product at the position so that stress by wrap and/or bend of the PCB may not apply to it.

7. Please dry out this product immediately after soldering and cleaning.

Allowable Temperature and Time of Reflow Soldering

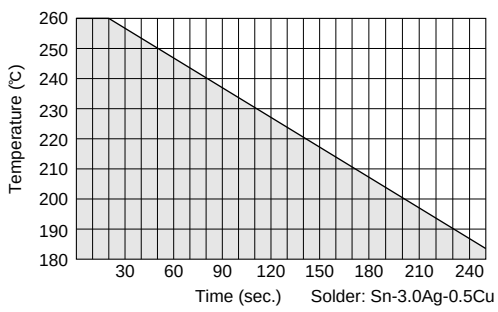

Reflow Soldering Standard Conditions

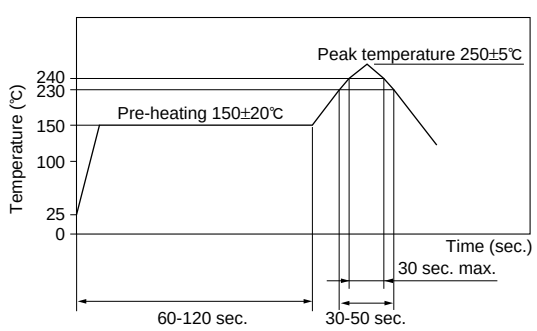

Measuring point of temperature: In-Out Terminals of the Device
Reflow Soldering: Both Convection and Infrared Rays
: Hot Air
: Hot Plate

Continued on the following page.

⚠Note • This PDF catalog is downloaded from the website of Murata Manufacturing co., ltd. Therefore, it's specifications are subject to change or our products in it may be discontinued without advance notice. Please check with our sales representatives or product engineers before ordering.
• This PDF catalog has only typical specifications because there is no space for detailed specifications. Therefore, please approve our product specifications or transact the approval sheet for product specifications before ordering.

Notice

Continued from the preceding page.

■ Notice (Handling)

1. Usage Condition

(1) Do not apply electrical voltage greater than specified in the drawing. It might cause degradation or destruction of the product. Even if it endures during a short time, long time qualification is not guaranteed.

(2) Confirm product's performance is not influenced by contact of other components.

(3) Please contact the manufacturer beforehand, if the product is to be used in frequently bent position.

2. Handling

(1) Avoid excessive stress when handling and transporting printed circuit board after connector and/or assembly has been secured to PCB.

(2) Do not try to pull the cable, when a connector with a coaxial cable is handled.

(3) Disregarding the following notes could cause mechanical damage and/or poor electrical performance.

3. Handling Instructions

(1) Cable is designed to fit only with MM7329-2700 and MM7329-2702 receptacles. Any other receptacle can not be used with this cable.

(2) Disengagement:
Use tool P/N M19000 (for MM7329-2700) or M19004 (for MM7329-2702) to insert or remove cable in a vertical direction from receptacle. Avoid pulling only the cable to prevent cable damage.

(3) Avoid twisting probe or cable when inserting or removing from receptacle.

(4) Mechanical stress:
The stress to the connector should be limited as shown in Figure 1.
(a) Stress to the housing.
Stress A and B: 4.9N max.
(b) Stress to the outer sleeve.
Stress C: 2.94N max.
Stress D: 1.96N max.
(c) Cable pull strength.
Stress E: 7.84N max. (for MM7329-2700)
4.9N max. (for MM7329-2702)

Figure 1. Mechanical Stress after Engagement

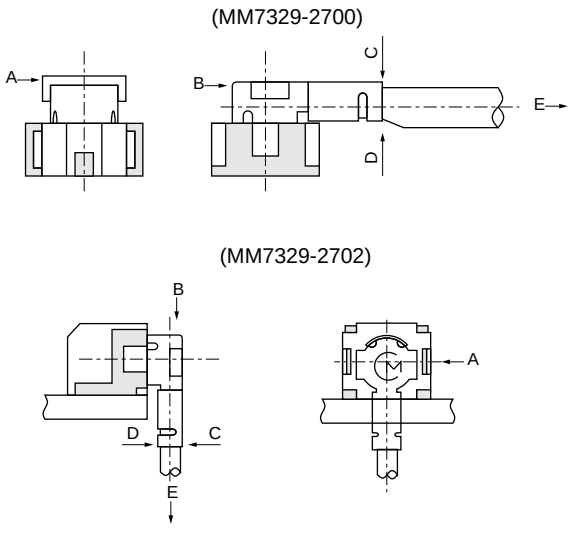

⚠Note • This PDF catalog is downloaded from the website of Murata Manufacturing co., ltd. Therefore, it's specifications are subject to change or our products in it may be discontinued without advance notice. Please check with our sales representatives or product engineers before ordering.
• This PDF catalog has only typical specifications because there is no space for detailed specifications. Therefore, please approve our product specifications or transact the approval sheet for product specifications before ordering.

Package

■ Dimensions of Reel

MM7329-2700RA1/RB4

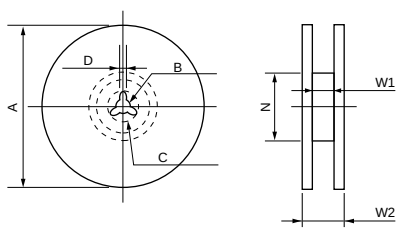

(in mm)

Murata Part Number	A	B	C	D	N (min.)	W1	W2 (max.)
MM7329-2700RA1	178	13	21	2	Dia. 50	13.5	18.5
MM7329-2700RB4	330	13	21	2	Dia. 50	13.5	18.5
TOLERANCE	±2.0	±0.5	±0.8	±0.5	–	±1.5	–

MM7329-2702RAB/RB2

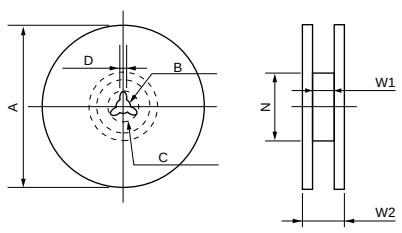

(in mm)

Murata Part Number	A	B	C	D	N (min.)	W1	W2 (max.)
MM7329-2702RAB	178	13	21	2	Dia. 50	13.5	18.5
MM7329-2702RB2	330	13	21	2	Dia. 50	13.5	18.5
TOLERANCE	±2.0	±0.5	±0.8	±0.5	–	±1.5	–

■ Dimensions of Taping

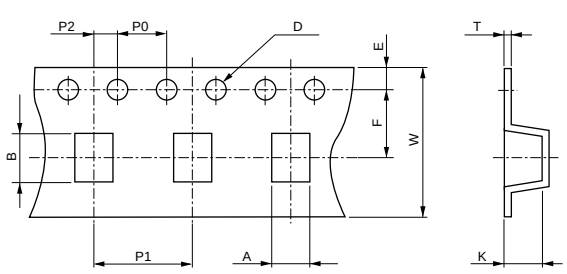

A	B	W	D	E	F	K	P0
3.9±0.1	3.7±0.1	12±0.2	ø1.5$^{+0.1}_{-0}$	1.75±0.1	5.5±0.1	3±0.15	4±0.1

P1	P2	T
8±0.1	2±0.1	0.3±0.05

(in mm)

■ Minimum Quantity

MM7329-2700RA1: dia.180 mm reel/1000 pcs.
MM7329-2700RB4: dia.330 mm reel/4000 pcs.
MM7329-2700B: Bulk/free
MM7329-2702RAB: dia.180 mm reel/ 500 pcs.
MM7329-2702RB2: dia.330 mm reel/2000 pcs.
MM7329-2702B: Bulk/free

⚠Note • This PDF catalog is downloaded from the website of Murata Manufacturing co., ltd. Therefore, it's specifications are subject to change or our products in it may be discontinued without advance notice. Please check with our sales representatives or product engineers before ordering.
• This PDF catalog has only typical specifications because there is no space for detailed specifications. Therefore, please approve our product specifications or transact the approval sheet for product specifications before ordering.

Miniaturized Microwave Coaxial Connector Cable List

			0.8D single shield FEP cable	0.4D single shield FEP cable	0.4D single shield PFA cable	0.4D single shield PFA cable	0.4D single shield PFA cable
Murata cable code			76	81	88	92	32
Inner conductor	Material	-	Silver coated copper covered steel wire	Silver coated copper wire	Silver coated copper covered steel wire	Silver coated copper wire	Silver coated copper wire
	No. and Dia.	(No./mm)	1/0.26	7/0.05	1/0.15	7/0.05	7/0.05
	Total Dia.	(mm)	0.26	0.15	0.15	0.15	0.15
Insulator	Material	-	FEP	FEP	PFA	PFA	PFA
	Melting point (Reference only)	Degree C	285	250	302-310	302-310	302-310
	Total Dia.	(mm)	0.8	0.4	0.43	0.4	0.4
Outer conductor	Material	-	Tin plated copper wire	Tin plated copper wire	Tin plated copper wire	Tin plated copper wire	Silver plated copper wire
	Dia. of wire	(mm)	0.05	0.05	0.05	0.05	0.05
	Total Dia.	(mm)	1.05	0.65	0.68	0.65	0.65
Sheath	Material	-	FEP	FEP	PFA	PFA	PFA
	Nominal thickness	(mm)	0.1	0.05	0.075	0.075	0.075
	Color	-	Gray	White	White	White	White
Overall Dia.		(mm)	1.24	0.8	0.83	0.8	0.8
Minimum bending radius		(mm)	6	4.8	3.3	3.3	3.3
Nominal impedance		(Ohm)	50	50	50	50	50
Continuous operating voltage			300 Vrms max.	300 Vrms max.	300 Vrms max.	300 Vrms max.	300 Vrms max.
Nominal static capacitance		(pF/m)	100	100	100	100	100
Nominal Insertion loss	dB/m at 1GHz		1.56	3.0	2.89	3.0	3.0
	dB/m at 2GHz		2.3	4.26	4.28	4.26	4.26
	dB/m at 3GHz		2.9	5.24	5.39	5.24	5.24
	dB/m at 4GHz		3.5	6.18	6.44	6.18	6.18
	dB/m at 6GHz				8.4	9.17	9.17
Assembly to FSC			Suitable	Suitable	Not Suitable	Not Suitable	Not Suitable
Assembly to GSC			Not Suitable	Not Suitable	Suitable	Suitable	Not Suitable
Assembly to HSC			Not Suitable	Not Suitable	Not Suitable	Not Suitable	Suitable

⚠Note • This PDF catalog is downloaded from the website of Murata Manufacturing co., ltd. Therefore, it's specifications are subject to change or our products in it may be discontinued without advance notice. Please check with our sales representatives or product engineers before ordering.
• This PDF catalog has only typical specifications because there is no space for detailed specifications. Therefore, please approve our product specifications or transact the approval sheet for product specifications before ordering.

⚠Note:

1. Export Control
   〈For customers outside Japan〉
   No muRata products should be used or sold, through any channels, for use in the design, development, production, utilization, maintenance or operation of, or otherwise contribution to (1) any weapons (Weapons of Mass Destruction (nuclear, chemical or biological weapons or missiles) or conventional weapons) or (2) goods or systems specially designed or intended for military end-use or utilization by military end-users.
   〈For customers in Japan〉
   For products which are controlled items subject to the "Foreign Exchange and Foreign Trade Law" of Japan, the export license specified by the law is required for export.
2. Please contact our sales representatives or product engineers before using the products in this catalog for the applications listed below, which require especially high reliability for the prevention of defects which might directly damage a third party's life, body or property, or when one of our products is intended for use in applications other than those specified in this catalog.
   ① Aircraft equipment ② Aerospace equipment
   ③ Undersea equipment ④ Power plant equipment
   ⑤ Medical equipment ⑥ Transportation equipment (vehicles, trains, ships, etc.)
   ⑦ Traffic signal equipment ⑧ Disaster prevention / crime prevention equipment
   ⑨ Data-processing equipment ⑩ Application of similar complexity and/or reliability requirements to the applications listed above
3. Product specifications in this catalog are as of July 2007. They are subject to change or our products in it may be discontinued without advance notice. Please check with our sales representatives or product engineers before ordering. If there are any questions, please contact our sales representatives or product engineers.
4. Please read rating and ⚠CAUTION (for storage, operating, rating, soldering, mounting and handling) in this catalog to prevent smoking and/or burning, etc.
5. This catalog has only typical specifications because there is no space for detailed specifications. Therefore, please approve our product specifications or transact the approval sheet for product specifications before ordering.
6. Please note that unless otherwise specified, we shall assume no responsibility whatsoever for any conflict or dispute that may occur in connection with the effect of our and/or a third party's intellectual property rights and other related rights in consideration of your use of our products and/or information described or contained in our catalogs. In this connection, no representation shall be made to the effect that any third parties are authorized to use the rights mentioned above under licenses without our consent.
7. No ozone depleting substances (ODS) under the Montreal Protocol are used in our manufacturing process.

Murata Manufacturing Co., Ltd.

http://www.murata.com/

Head Office
1-10-1, Higashi Kotari, Nagaokakyo-shi, Kyoto 617-8555, Japan
Phone: 81-75-951-9111

International Division
3-29-12, Shibuya, Shibuya-ku, Tokyo 150-0002, Japan
Phone: 81-3-5469-6123 Fax: 81-3-5469-6155 E-mail: intl@murata.co.jp