Product Description

The **MYTNC1R84RELA2RA** is miniature UltraBK™ called “Ultra Block”, an ultra-thin high efficiency integrated power solution that combines a 4A DC/DC converter with components.

This totally integrated module provides up to 90.5% efficiency in a small and thin 10.5 x 9.0 x 2.1mm LGA package. Murata’s easy-to-use module terminal design allows simple power layout and maximum efficiency by minimizing routing parasitic resistance.

- Wide input voltage 6.0 to 14.4V
- Settable output voltage 0.7 to 1.8V
- Efficiency up to 90.5%
  Up to 90.0% Efficiency with 12VIN/1.8VOUT/4A
- Up to 4A
- Ultra-thin/small 10.5 x 9.0 x 2.1mm LGA package
- Suitable to be place on the back side of PCB

Features

- Power-good output
- Over-current and Over-temperature protection
- Remote on/off control
- Output voltage sense
- I²C 6.0-compatible serial interface operating up to 1MHz.

Typical Applications

- PCIe / server applications
- FPGA and DSP
- Datacom / telecom systems
- Distributed bus architectures (DBA)
- Programmable logic and mixed voltage systems

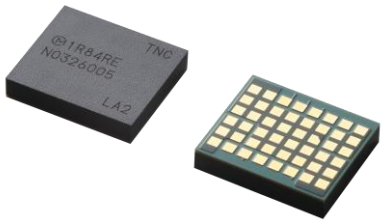

Efficiency

Ta=25°C 12VIN 1.8VOUT

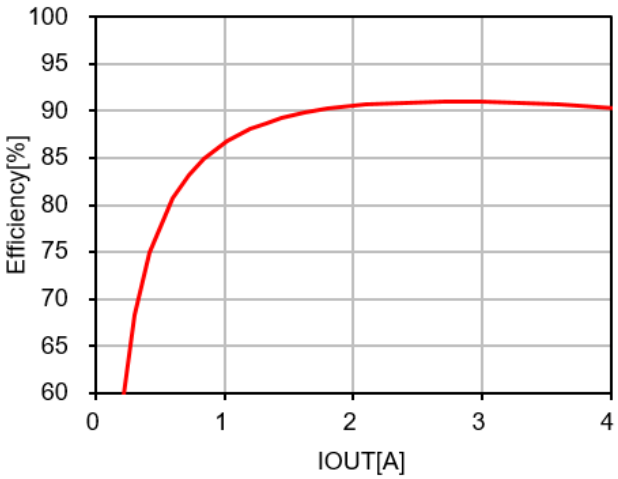

Figure 1. Efficiency Plot

Simplified Application Circuit

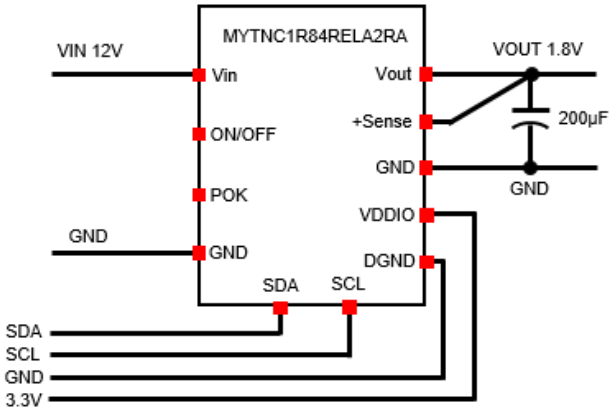

Figure 2. Simplified Circuit Diagram

Copyright ©2020 Murata Manufacturing Co., Ltd. All rights reserved.

Product Description 1
Features 1
Typical Applications 1
Efficiency 1
Simplified Application Circuit 1
Absolute Maximum Ratings(1)(2) 3
Recommended Operating Conditions(1) 3
Package Thermal Characteristics(1)(2) 3
Electrical Characteristics 4
Pin Configuration 8
Pin Descriptions 8
Functional Block Diagram 9
Typical Performance Characteristics 10
Thermal Deratings (Reference Data) 11
Output Voltage Range 11
Limitation of Input Voltage Slew rate 12
Detailed Description 12
Output Voltage Remote Sense Function 12
Remote Enable Function 12
Soft start Function 13
Power Good Operation 13
Telemetry System 13
I²C Interface Bus Overview 14
Standard-, Fast-, Fast-Mode Plus Protocol 14
I²C Update Sequence 15
Register Map 17
Detailed Register Description 18
Protections 24
Over Current Protection and Short Circuit Protection 24
Over Temperature Protection 24
Soldering Guidelines 25
Pb-free Solder Processes 25
Dry Pack Information 26
Application Performance 27
Transient Performance 30
Test Circuit 30
Component Selection 31
Input Fuse 31
Input Capacitor 31
Output Capacitor 31
Packaging Information 32
Moisture Sensitivity Level 32
Package Drawing 32
Recommended Board Land Pattern (Top View) 32
Top Marking Specification 33
Application Circuit 33
Application Circuit Part List (Recommended) 33
Application Board Example 34
Tape and Reel Specification 35
Order Codes 37
Notices 37
CAUTION 37
Limitation of Applications 37
Note 37
Product Specification 38
Sales contact 38
Disclaimers 38
Patent Statement 39
Copyright and Trademark 39

Copyright ©2020 Murata Manufacturing Co., Ltd. All rights reserved.

Absolute Maximum Ratings(1)(2)

PARAMETER	MIN	MAX	UNITS
Vin, ON/OFF Pin(3)	-0.3	16	V
POK Pin, SCL, SDA, VDDIO	-0.3	5.5	V
Storage Temperature	-40	125	°C
Soldering / Reflow temperature(4)	-	260	°C
ESD Tolerance, HBM(5)	-	1000	V

Notes:

(1) Stresses beyond those listed under absolute maximum ratings may cause permanent damage to the device. These are stress ratings only. Functional operation of the device at these or any other conditions beyond those indicated in the operational sections of the specification are not implied. Exposure to absolute maximum rating conditions for extended periods may extremely reduce device reliability.

(2) All voltages are with respect to GND plane.

(3) Do NOT exceed more than 0.3V from Vin voltage.

(4) Recommended Reflow profile is written in "Soldering Guidelines".

(5) Human body model, per the JEDEC standard JS-001-2012.

Table 1. Absolute Maximum Ratings

Recommended Operating Conditions(1)

PARAMETER	MIN	MAX	UNITS
Input Voltage Range	6.0	14.4	V
Ambient Temperature(2)	-40	105	°C
Junction Temperature	-40	120	°C
Load Current	0	4	A

Notes:

(1) This module should be operated inside the recommended operating conditions. This module has been designed and tested on the assumption that it will be used under the recommended operating conditions. Operating in not recommended condition may reduce reliability of the module.

(2) See the temperature derating curves in the thermal deratings. However, do not condensate.

Table 2. Recommended Operating Conditions

Package Thermal Characteristics(1)(2)

PARAMETER		TYP	UNITS
Θjcb-1	Junction-case-bottom at heat Junction1	10.0	°C/W
Θjcb-2	Junction-case-bottom at heat Junction2	47.3	°C/W
Θjct-1	Junction-case-top at heat Junction1	64.9	°C/W
Θjct-2	Junction-case-top at heat Junction2	53.7	°C/W
Θja	Junction-air	19.9	°C/W

Notes:

(1) Package thermal characteristics and performance are acquired and reported in according to the JEDEC standard JESD51-12. See "Fig.40" below for more information on our measurement conditions.

(2) Junction thermal resistance is a function not only of the internal parts, but it is also extremely sensitive to the environment which includes, but is not limited to, board thickness, number of layers, copper weight / routes, and air flow. Attention to the board layout is necessary to realize expected thermal performance.

Table 3. Package Thermal Characteristics

Copyright ©2020 Murata Manufacturing Co., Ltd. All rights reserved.

Electrical Characteristics

VIN=12V, VOUT=1.8V, IOUT=4A, Ta=+25°C, unless otherwise noted. The Electrical Characteristics table is based on the test circuit in Figure 35.

PARAMETER	SYMBOL	CONDITIONS	MIN	TYP	MAX	UNITS
INPUT SUPPLY						
Input Voltage(1)	VIN		6	12	14.4	V
Input Voltage Start-up Slew rate(3)	VINSR		Note(2)	-	150	V/ms
VIN Under Voltage Lockout Threshold - VIN rising(3)	VIUVH		-	-	5.45	V
VIN Under Voltage Lockout Threshold - VIN falling(3)	VIUVL		4.5	-	-	V
VIN Under Voltage Lockout Hysteresis	VIUVHYS		-	215	-	mV
VIN Current Supply, Switching	IVINSW	No Load	-	25	-	mA
VIN Current Supply, Shutdown	IVINSD	VOUT=0V, ON/OFF=0V,	-	160	-	µA
Remote ON/OFF Control (ON/OFF Pin)						
Threshold High(3)	VTREH	Logic ON by pull-up or open of ON/OFF Pin	1.1	-	-	V
Threshold Low(3)	VTREL	Logic OFF by pull-down of ON/OFF Pin	-	-	0.4	V
ON/OFF Pin Leakage Current(3)	ILEN	VIN=14.4V, ON/OFF=0V, From Vin to ON/OFF	-	-	200	µA
CONVERTER						
Efficiency	EFF	VIN=12.0V, VOUT=1.8V, IOUT=4A	-	90	-	%
		VIN=12.0V, VOUT=1.2V, IOUT=4A	-	88	-	%
Charge Pump Switching Frequency		Per a phase	-	500	-	kHz
Buck Converter Switching Frequency		Per a phase	-	1000	-	kHz
Start-up Time		VOUT=5 to 95% of VOUT VSET1[7:0]=01000110 SS[2:0]=100	-	6	-	msec
POWER GOOD (POK Pin)						
POK Sink Current(3)		POK=0.4V	4	-	-	mA
POK Pin Leakage Current(3)	ILPG	POK=5V, POK=High	-	-	1	µA
POK & Output Under-Voltage		VOUT falling (fault)	-	90	-	% of VOUT
		VOUT rising (good)	-	95	-	
POK & Output Over-Voltage		VOUT rising (fault)	-	110	-	
		VOUT falling (good)	-	105	-	
THERMAL SHUTDOWN						
Thermal Shutdown Threshold	TSD	Shutdown operating	-	150	-	°C
Thermal Shutdown Hysteresis	TSDHYS		-	20	-	°C
OUTPUT						
Output Voltage(4)	VOUT	Initial Setting (VDDIO=3.3V)		0.7		V
		9.6 ≤ VIN ≤ 14.4V	0.7	-	1.8	V
		7.0 ≤ VIN ≤ 14.4V	0.7	-	1.35	V
		6.0 ≤ VIN ≤ 14.4V	0.7	-	1.0	V
Output Voltage Accuracy (1)(5)		6.0 ≤ VIN ≤ 14.4V 0.7 ≤ VOUT ≤ 1.8V(4) 0 ≤ IOUT ≤ 4A	-3	-	+3	%
Temperature variation(3)		-40 ≤ Ta ≤ 105°C	-	1	-	%
Total Output Voltage Accuracy(3)		0.7 ≤ VOUT ≤ 1.8V(4) 0 ≤ IOUT ≤ 4A -40 ≤ Ta ≤ 105°C	-3	-	+3	%

Copyright ©2020 Murata Manufacturing Co., Ltd. All rights reserved.

VIN=12V, VOUT=1.8V, IOUT=4A, Ta=+25°C, unless otherwise noted. The Electrical Characteristics table is based on the test circuit in Figure 35.

PARAMETER	SYMBOL	CONDITIONS		MIN	TYP	MAX	UNITS
Output Current(1)	IOUT			0	-	4	A
Current Limit Inception				-	11	-	A
Current Limit Method					Hiccup		
Line Regulation(3)(5)		VIN=min. to max.		-1	-	+1	%
Load Regulation(3)(5)		IOUT=min. to max.		-1	-	+1	%
Dynamic Load Peak Deviation		IOUT=50-100%, SR=1.0A/µs		-	±3.0	-	%
Ripple and Noise(3)(5) (20MHz bandwidth)		6.0 ≤ VIN ≤ 14.4V 0.7 ≤ VOUT ≤ 1.8V(4) 0 ≤ IOUT ≤ 4A		-	-	40	mV pk-pk
		VIN=12.0V 0.7 ≤ VOUT ≤ 1.8V(4) IOUT=4A		-	1	-	% of Vout
External Output Capacitance Range(3)	COUT	6.0≤ VIN≤14.4V 0.7≤VOUT≤1.8V(4) 0≤IOUT≤4A	SS[2:0] =000	200	-	600	µF
			SS[2:0] =001			1200	
			Other than the above			2000	
TELEMETRY							
Output Voltage Sense Measurement Time		12-bit ADC resolution		-	512	-	µs
Output Voltage Sense Refresh Rate				-	1.5	-	ms
Output Voltage Sense Measurement Resolution				-	1	-	mV
Output Voltage Sense Measurement Accuracy				-	±1	-	%
Input Voltage Sense Measurement Time		8-bit ADC resolution		-	1.5	-	ms
Input Voltage Sense Refresh Rate				-	1.5	-	ms
Input Voltage Sense Measurement Resolution				-	80	-	mV
Input Voltage Sense Measurement Accuracy				-	±2	-	%
Average TEMP sensor Measurement Time		12-bit ADC resolution		-	4	-	ms
TEMP sensor Refresh Rate				-	128	-	µs
TEMP sensor Measurement Resolution				-	0.5	-	°C
TEMP sensor(6) Measurement Accuracy				-	±3	-	°C
Average Output Current Sense Measurement Time		12-bit ADC resolution		-	512	-	µs
		8-bit ADC resolution			128		
Output Current Sense Refresh Rate				-	128	-	µs
Output Current Sense Measurement Accuracy				-	±4	-	%
Output Current Sense Measurement Resolution		12-bit ADC resolution		-	25	-	mA
		8-bit ADC resolution			40		
I²C SERIAL INTERFACE(SCL, SDA, VDDIO)							
VDDIO Supply Voltage	V_{DDIO}			1.08	-	5.5	V
SDA, SCL Input High Voltage	V_{IH}			0.7 x VDDIO	-	-	V
SDA, SCL Input Low Voltage	V_{IL}			-	-	0.3 x VDDIO	V

Copyright ©2020 Murata Manufacturing Co., Ltd. All rights reserved.

VIN=12V, VOUT=1.8V, IOUT=4A, Ta=+25°C, unless otherwise noted. The Electrical Characteristics table is based on the test circuit in Figure 35.

PARAMETER	SYMBOL	CONDITIONS	MIN	TYP	MAX	UNITS
SDA, SCL Input Hysteresis	V_{HYS}		0.05 x VDDIO	-	-	V
SDA, SCL Input Current	I_{SCL}, I_{SDA}		-1	-	1	µA
SDA Output Low Level	V_{OL}	ISDA=20mA	-	-	0.4	V
I^2C Interface Initial Wait Time		Initial wait time from EN logic high to 1st I^2C command accepted	1000	-	-	µs
MTP Non-Volatile Memory Write Cycle Time			-	34	50	ms
SDA, SCL Pin Capacitance(3)	$C_{I/O}$		-	-	10	pF
I^2C INTERFACE TIMING CHARACTERISTICS FOR STANDARD MODE AND FAST MODE PLUS						
Serial Clock Frequency	F_{SCL}	Standard mode	-	-	100	kbits/s
		Fast mode	-	-	400	kbits/s
		Fast mode plus	-	-	1	Mbits/s
Clock Low Period	T_{LOW}	Standard mode	4.7	-	-	µs
		Fast mode	1.3	-	-	µs
		Fast mode plus	0.5	-	-	µs
Clock High Period	T_{HIGH}	Standard mode	4	-	-	µs
		Fast mode	600	-	-	ns
		Fast mode plus	260	-	-	ns
BUS Free Time between a STOP a START Condition	T_{BUF}	Standard mode	4.7	-	-	µs
		Fast mode	1.3	-	-	µs
		Fast mode plus	0.5	-	-	µs
Setup Time for a Repeated START Condition	$T_{SU:STA}$	Standard mode	4.7	-	-	µs
		Fast mode	600	-	-	ns
		Fast mode plus	260	-	-	ns
Hold Time for a Repeated START Condition	$T_{HD:STA}$	Standard mode	4	-	-	µs
		Fast mode	600	-	-	ns
		Fast mode plus	260	-	-	ns
Setup Time of STOP condition	$T_{SU:STO}$	Standard mode	4	-	-	µs
		Fast mode	600	-	-	ns
		Fast mode plus	260	-	-	ns
Data Setup Time	$T_{SU:DAT}$	Standard mode	250	-	-	ns
		Fast mode	100	-	-	ns
		Fast mode plus	50	-	-	ns
Data Hold Time	T_{HD_DAT}	Standard mode	0	-	-	µs
		Fast mode	0	-	-	ns
		Fast mode plus	0	-	-	ns
Rise Time of SDA and SCL signals	T_R	Standard mode	-	-	1000	ns
		Fast mode	20	-	300	ns
		Fast mode plus	-	-	120	ns
Fall time of SDA and SCL Signals	T_F	Standard mode	-	-	300	ns
		Fast mode	20 x VDDIO/ 5.5V	-	300	ns
		Fast mode plus	20 x VDDIO/ 5.5V	-	120	ns
Data Valid Time	T_{VD}	Standard mode	-	-	3.45	µs
		Fast mode	-	-	900	ns

Copyright ©2020 Murata Manufacturing Co., Ltd. All rights reserved.

VIN=12V, VOUT=1.8V, IOUT=4A, Ta=+25°C, unless otherwise noted. The Electrical Characteristics table is based on the test circuit in Figure 35.

PARAMETER	SYMBOL	CONDITIONS	MIN	TYP	MAX	UNITS
		Fast mode plus	-	-	450	ns
Data Valid Acknowledge Time	T_{VDA}	Standard mode	-	-	3.45	µs
		Fast mode	-	-	900	ns
		Fast mode plus	-	-	450	ns
Capacitive Load for SDA and SCL	C_{BUS}	Standard mode	-	-	400	pF
		Fast mode	-	-	400	pF
		Fast mode plus	-	-	550	pF

Notes:
(1) Min/Max specifications are 100% production tested at Ta=25 °C, unless otherwise noted. Limits over the operating range are guaranteed by design.
(2) See the section of "Limitation of Input Voltage slew rate".
(3) Guaranteed by design.
(4) See the Output Voltage Range of fig.9.
(5) Only statics state.
(6) The temperature of TEMP sensor includes some error from the surface temperature.

Table 4. Electrical Characteristics

Copyright ©2020 Murata Manufacturing Co., Ltd. All rights reserved.

Pin Configuration

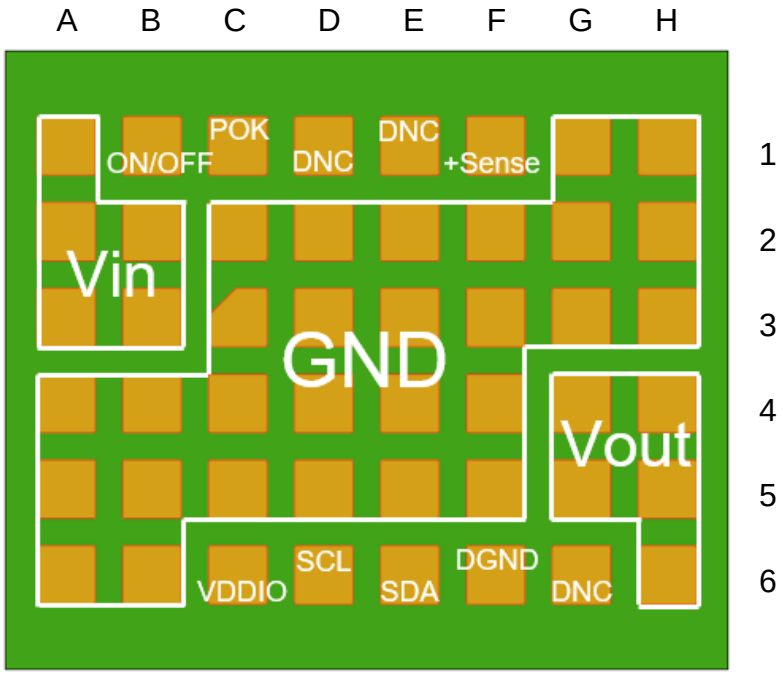

Figure 3. Module Terminal (Top View)

Pin Descriptions

PIN NO.	NAME	DESCRIPTION
A1-A3, B2-B3	Vin	Input Voltage pins. Apply input voltage between these pins and GND pins.
A4-A6, B4-B6, C2-C5, D2-D5,E2-E5, F2-F5, G1-G3, H1-H3	GND	Ground pins. Connect to the GND plane.
B1	ON/OFF	Remote ON/OFF pin. The pin is connected to Vin through the internal resistance.
C1	POK	Power Good pin. The function is operated by internal open-drain FET.
D1, E1, G6	DNC	Do not connect pins. Those pins must be left floating individually.
F6	DGND	Digital ground pin. Connect to I^2C signal GND.
E6	SDA	I^2C Serial bus data input/output pin.
D6	SCL	I^2C Serial bus clock input pin.
G4-G5, H4-H6	Vout	Output pins. Connect the output load between these pins and Ground pins. Place external bypass capacitors as close as possible to these pins to reduce parasitic inductance.
C6	VDDIO	Digital I/O supply voltage for I^2C interface.
F1	+Sense	Output Voltage Sensing pin. Connect to an output near the load to improve load regulation. This pin must be connected to output near the load, or at the module pins.

Table 5. Pin Descriptions

Copyright ©2020 Murata Manufacturing Co., Ltd. All rights reserved.

Functional Block Diagram

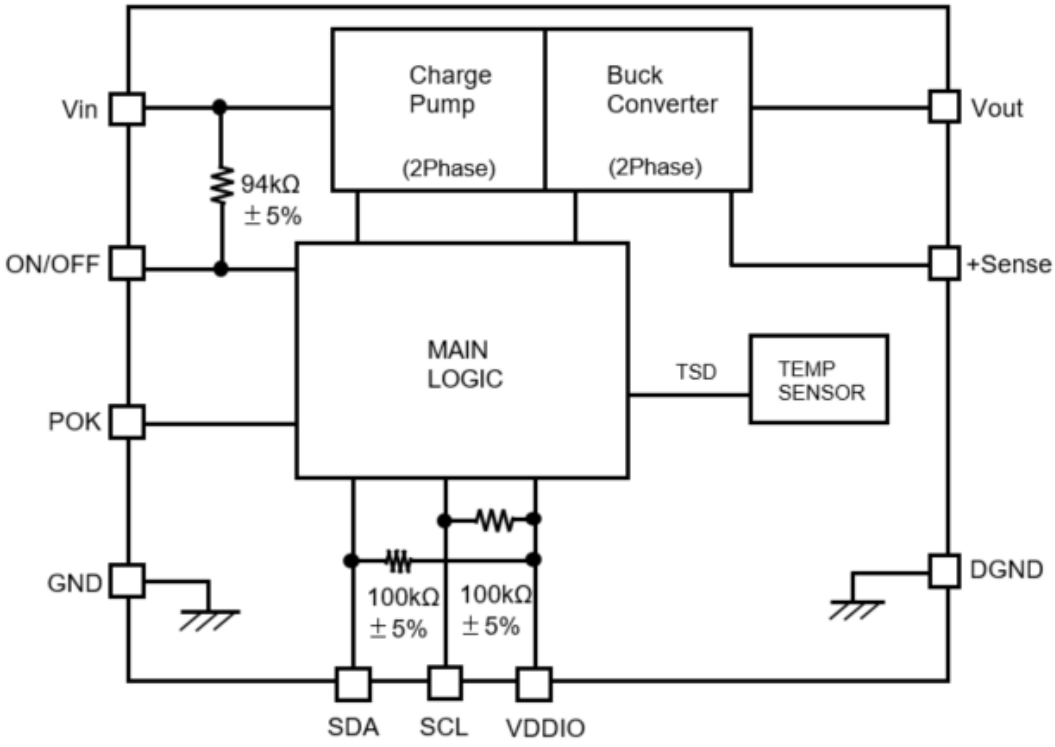

Figure 4. Functional Block Diagram

Copyright ©2020 Murata Manufacturing Co., Ltd. All rights reserved.

Typical Performance Characteristics

(VIN=12V Ta=25°C)

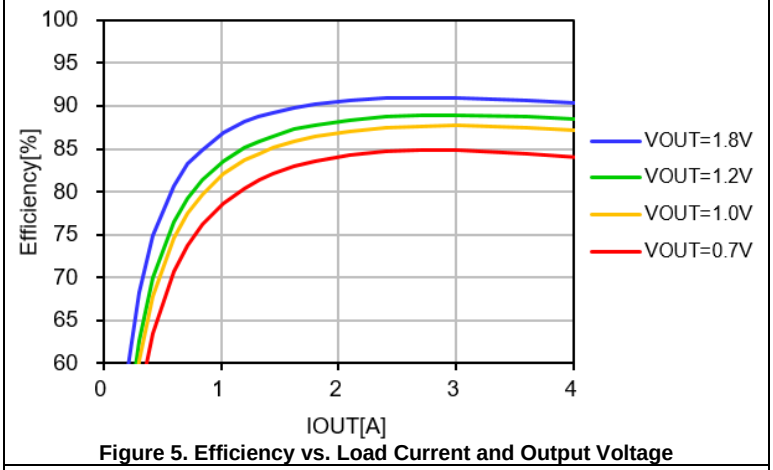

Figure 5. Efficiency vs. Load Current and Output Voltage

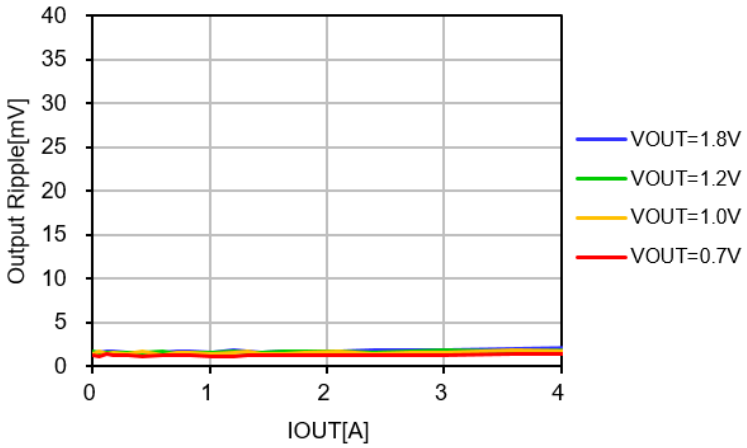

Figure 6. Output Ripple vs. Load Current and Output Voltage (COUT=200µF, ScopeBW=20MHz)

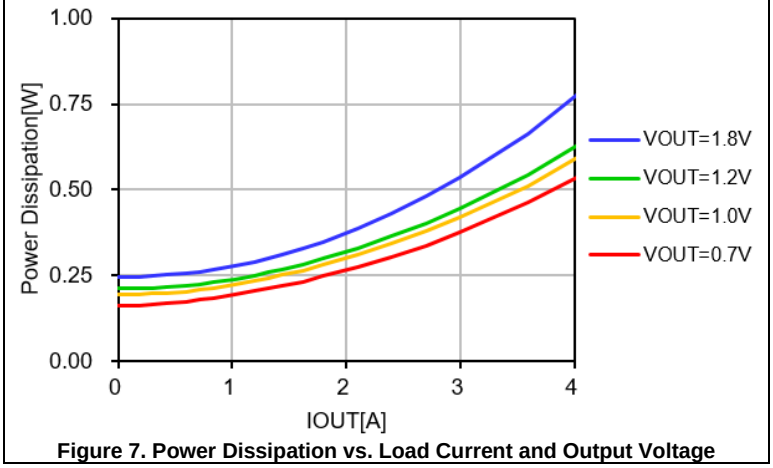

Figure 7. Power Dissipation vs. Load Current and Output Voltage

Copyright ©2020 Murata Manufacturing Co., Ltd. All rights reserved.

Thermal Deratings (Reference Data)

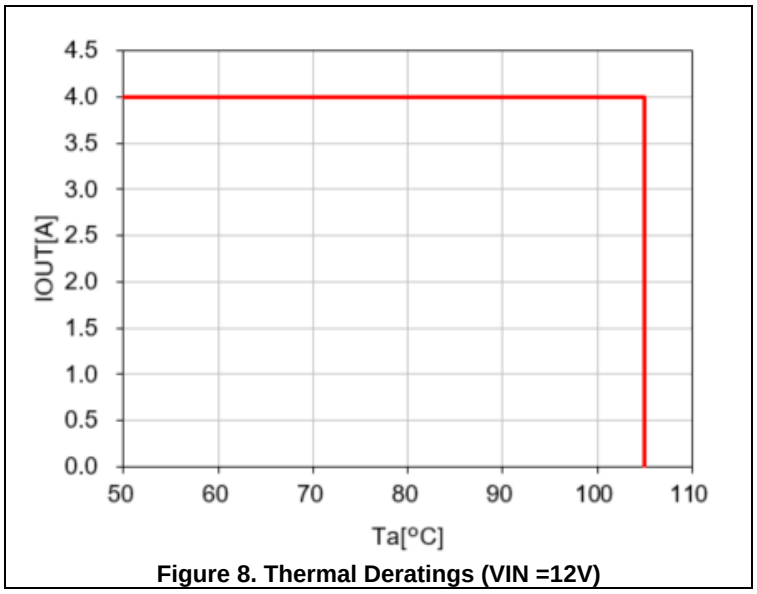

Figure 8. Thermal Deratings (VIN =12V)

Thermal deratings are evaluated in following condition.
・The product is mounted on 114.5 x 101.5 x 1.6mm (Layer1, 4: 2oz Layer2, 3: 1oz copper) FR-4 board.
・No forced air flow.
Surface temperature of the product: 118.7°C max.

Output Voltage Range

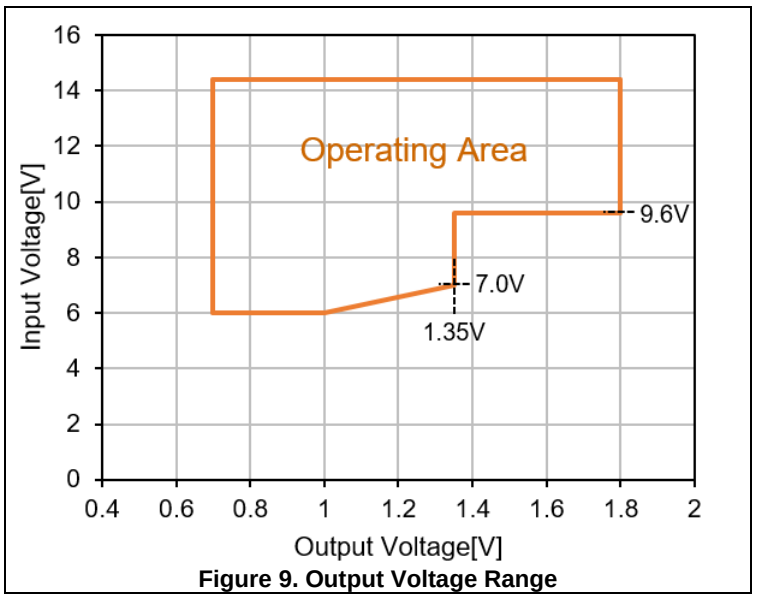

Figure 9. Output Voltage Range

Copyright ©2020 Murata Manufacturing Co., Ltd. All rights reserved.

Limitation of Input Voltage Slew rate

When starting the module with ramping Input Voltage up, the slew rate of the ramping should be managed for the proper operation. If Input Voltage ramping up is too steep, it would cause charge injection to the internal nodes via parasitic. The maximum slew rate of the Input Voltage ramp up when booting the module with Input Voltage is specified on the table 4 "Electronic Characteristics".
Similarly, if the VIN slew late is too low compare with VOUT slew rate, it could prevent expected start up behavior. To avoid hitting the maximum duty cycle operation, the VIN slew rate should satisfy either equation of (eq1) – (eq.6) in the follow table that determined by SS setting. VINSR_L is minimum of input voltage startup slew rate and SS is soft start.
As a reference, estimated value of the slew rate and start-up time for each output voltage is written in the table.

SS (V/ms)	VINSR EQUATION	CALCULATION EXAMPLE					
		VINSR_L (V/ms)			VIN RISE TIME (0V to 12V) (ms)		
		1.0VOUT	1.35VOUT	1.8VOUT	1.0VOUT	1.35VOUT	1.8VOUT
1.867	$VINSR \geqq 11/15 \times VOUT - 0.41$ (eq.1)	0.32	0.58	0.91	37.5	20.7	13.2
0.934	$VINSR \geqq 22/45 \times VOUT - 0.24$ (eq.2)	0.25	0.42	0.64	48	28.6	18.8
0.467	$VINSR \geqq 11/45 \times VOUT - 0.04$ (eq.3)	0.2	0.29	0.4	60	41.4	30
0.233	$VINSR \geqq 7/45 \times VOUT - 0.04$ (eq.4)	0.12	0.17	0.24	100	70.6	50
0.117	$VINSR \geqq 1/15 \times VOUT + 0.01$ (eq.5)	0.08	0.1	0.13	150	120	92.3
0.058	$VINSR \geqq 2/45 \times VOUT - 0.01$ (eq.6)	0.03	0.02	0.07	400	240	171.4
0.029	No minimum limitation	-			-		
0.014	No minimum limitation	-			-		

Table.6 Minimum input voltage start-up slew rate and start-up time

Detailed Description

The MYTNC1R84RELA2RA is a two-stage DCDC converter that is composed of a dual-phase charge pump-based DCDC converter and a dual-phase synchronous buck DCDC converter. The output voltage range supported from 0.7 to 1.8V (The output voltage range depend on the input voltage.) with load currents of up to 4A and up to 7.2W delivered to the external load. This module isn't designed for the parallel operation.

Output Voltage Remote Sense Function

The MYTNC1R84RELA2RA has a sense pin, +Sense, for this function. The function is capable of compensating for the voltage drop in the wiring by connecting the sense pin to the load point. The upper limit of the compensating by sense function depends on the maximum voltage allowed to the Vout pin (within range of the Output Voltage Accuracy). The sense trace should be as short as possible and shielded by the GND line or something else to reduce noise susceptibility.
The recommended sense line length is within 10cm for output voltage stability. Do NOT connect sense pin to the output of the additional LC filter that sits between the Vout pin and +Sense pin. If the remote sense is not needed, the +Sense pin should be shorted to the Vout pin.

Remote Enable Function

The MYTNC1R84RELA2RA has an enable input pin, ON/OFF, which is designed to be compatible with the low voltage digital I/O levels so that it can be easily driven by an external controller. The ON/OFF pin logic is high active and connected to the VIN though internal resistors. So if external power sequencing or control is not required, the ON/OFF pin can be left open.

Copyright ©2020 Murata Manufacturing Co., Ltd. All rights reserved.

Soft start Function

The MYTNC1R84RELA2RA has a soft start function. This function suppresses the inrush current and the output voltage overshoot. When the function is operating, the converter is controlled in discontinuous current mode (DCM), so the output ripple voltage may be larger than steady-state behavior which is in continuous current mode (CCM). If the input voltage drops and the operating condition deviates from the supported operation range of fig.9 “Output Voltage Range”, you should discharge the input voltage below the VIUVL and then restart.
This soft start function is also compatible with pre-bias start-up. However the converter cannot prevent reverse current except during soft start, so the output must NOT be connected to a circuit that has a voltage higher than the output voltage setting.

Power Good Operation

MYTNC1R84RELA2RA has an open-drain “power good” pin, POK. The POK pin must be pulled up externally, though a resistor to a voltage of ≦5.5V. MYTNC1R84RELA2RA will hold the POK pin low during soft start, the VOUT is outside of the regulation or when the fault condition is detected and being handled. Please note that the power good function will not work when the module is inactive. Therefore, the POK pin will be high impedance when the VIN is below the VIUVH or the module disabled.

The power good function is activated after soft start has finished. If the VOUT becomes within +5% to –5% of the target value, internal comparators detect the power good state and the power good signal becomes high. After that, if the VOUT rises or falls to outside of +10% or –10% of the target value, the power good signal becomes low.

The power good function is a flag that indicates the output voltage status and internal protection status. If the POK pin isn’t high for a long time from startup, there are some abnormal situation occur in inside the module or external environment.
So, we recommend monitoring the POK pin and reset the module and the output load in abnormal.

Telemetry System

An ADC-based telemetry system is provided to monitor health of the MYTNC1R84RELA2RA and report status through the I^2C interface for fault management and diagnostics. The following signals can be reported using the telemetry circuits: input voltage, output voltage, output current, and MYTNC1R84RELA2RA temperature. Typical parameters for temperature measurement function are as follows:

Resolution: 0.5°C
Accuracy: ±3°C
Measurement time: 4ms

The telemetry register functionality is as follows:

- ADC presents a new value, which is latched internally and overwritten as new values come in.
- The read-only registers are updated with the latched values only when the upper byte is read.
- Reading a lower byte does not update the upper-lower byte combo value.
- Reading once returns the previous value; reading again returns the current value.

See the Electrical Characteristics table for additional information regarding telemetry.
The telemetry measurement temperature isn’t the module surface temperature. The telemetry temperature is the measured value of the inside the module. So the telemetry temperature includes some error from the surface temperature.

Copyright ©2020 Murata Manufacturing Co., Ltd. All rights reserved.

Programming

MYTNC1R84RELA2RA can be programmed through the I²C serial bus interface to configure certain system parameters. Those programmable parameters are output voltage and soft start time.
See the section of "Register Map" and "Detailed Register Description" for program to resister.

I²C Interface Bus Overview

The I²C bus consists of a data line (SDA) and a clock line (SCL) with pull-up structures. When the bus is idle, both SDA and SCL lines are pulled high. All the I²C compatible devices connect to I²C bus through open drain I/O pins, SDA and SCL. A master device, usually a microcontroller or a digital signal processor, controls the bus. The master is responsible for generating the SCL signal and device addresses. The master also generates specific conditions that indicate the START and STOP of data transfer. An I²C slave device receives and/or transmits data on the bus under control of the master device.

MYTNC1R84RELA2RA operates as an I²C slave and supports the following data transfer modes, as defined in the I²C-Bus specification: Standard mode (100 Kbps) and fast mode (400 Kbps), and fast mode plus (1 Mbps). The interface adds flexibility to the power supply solution, enabling some functions to be programmed to new values depending on application requirements. Register contents remain intact as long as the VDD bias supply voltage remains above the under-voltage lockout threshold.

The data transfer protocol for standard and fast modes is exactly the same, therefore they are referred to as F/S-mode in this document. MYTNC1R84RELA2RA supports 7-bit addressing; 10-bit addressing and general call address are not supported. The device 7-bit address is defined as ‘0x30‘.

Standard-, Fast-, Fast-Mode Plus Protocol

The master initiates data transfer by generating a start condition. The start condition is when a high-to-low transition occurs on the SDA line while SCL is high, as shown in Figure 10. All I²C-compatible devices should recognize a start condition.

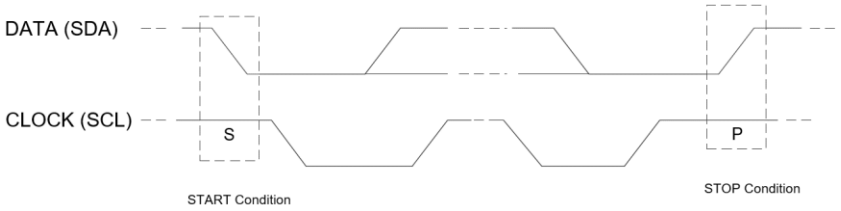

Figure 10. START and STOP Conditions

The master then generates the SCL pulses, and transmits the 7-bit address and the read/write direction bit R/W on the SDA line. During all transmissions, the master ensures that data is valid. A valid data condition requires the SDA line to be stable during the entire high period of the clock pulse (see Figure 11). All devices recognize the address sent by the master and compare it to their internal fixed addresses. Only the I²C slave device with a matching address generates an Acknowledge (see Figure 12) by pulling the SDA line low during the entire high period the ninth SCL cycle. Upon detecting this acknowledge, the master knows that communication link with an I²C slave has been established.
The master generates further SCL cycles to either transmit data to the I²C slave (R/W bit 1) or receive data from the I²C slave (R/W bit 0). In either case, the receiver needs to acknowledge the data sent by transmitter. So an acknowledge signal can either be generated by the master or by the I²C slave, depending on which one is the receiver. The 9-bit valid data sequences consisting of 8-bit data and 1-bit acknowledge can continue as long as necessary.

Copyright ©2020 Murata Manufacturing Co., Ltd. All rights reserved.

To signal the end of the data transfer, the master generates a stop condition by pulling the SDA line from low to high while the SCL line is high (see Figure 10). This releases the bus and stops the communication link with the addressed I²C slave. All I²C compatible devices must recognize the stop condition. Upon the receipt of a stop condition, all devices know that the bus is released, and they wait for a start condition followed by a matching address. Attempts to read data from register addresses not listed in this section will result in 0xFF being read out.

I²C Update Sequence

MYTNC1R84RELA2RA requires a start condition, a valid I²C address, a register address byte, and a data byte for a single update. After the receipt of each byte, MYTNC1R84RELA2RA device acknowledges by pulling the SDA line low during the high period of a single clock pulse. A valid I²C address selects the MYTNC1R84RELA2RA, which performs an update on the falling edge of the acknowledge signal that follows the LSB.

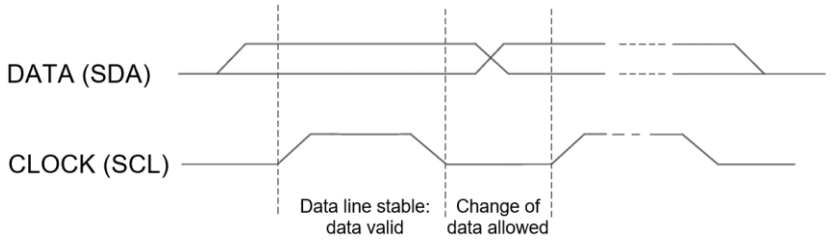

Figure 11. Bit Transfer on the Serial Interface

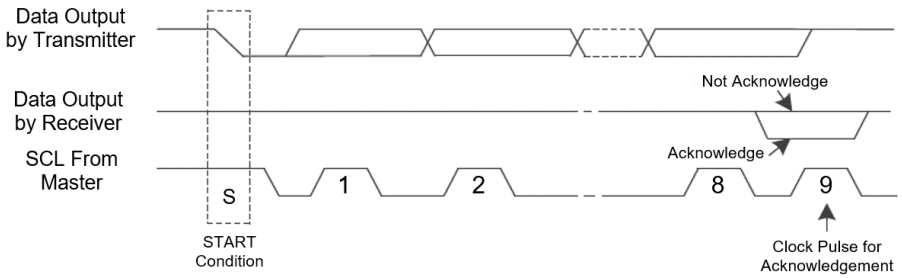

Figure 12. Acknowledge on the I²C Bus

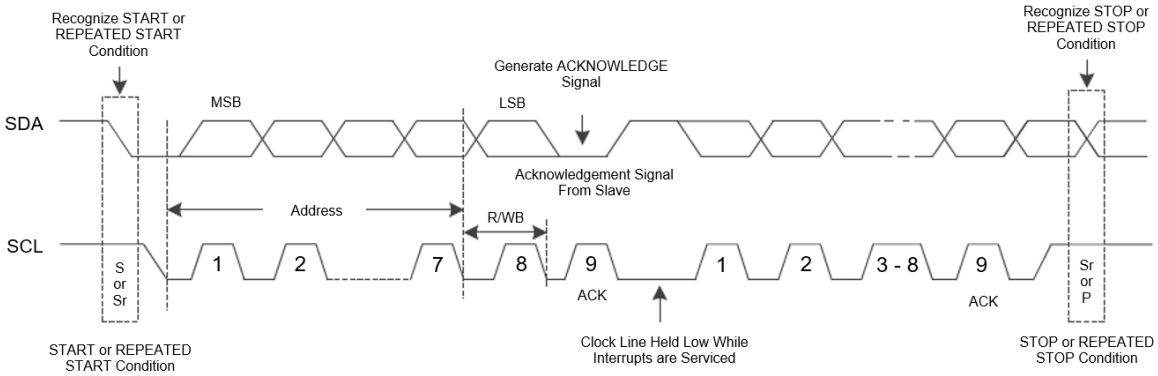

Figure 13. Bus Protocol

Copyright ©2020 Murata Manufacturing Co., Ltd. All rights reserved.

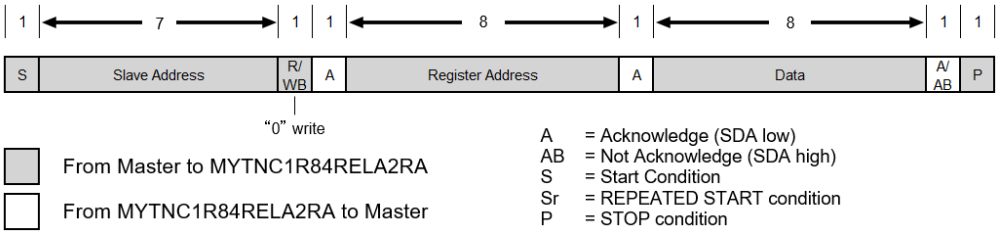

Figure 14. "Write" Data Transfer Format in Standard-, Fast, Fast-Plus Modes

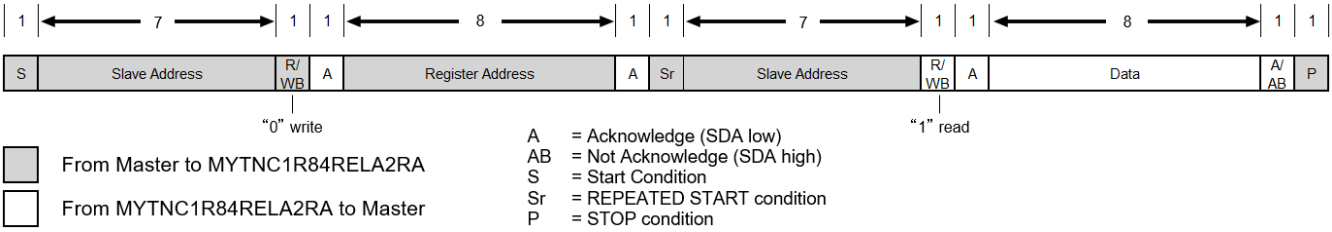

Figure 15. "Read" Data Transfer Format in Standard-, Fast, Fast-Plus Modes

Copyright ©2020 Murata Manufacturing Co., Ltd. All rights reserved.

Register Map

I²C Slave Address: 0110000 (0x30) (1)
Register Configuration Parameters

NAME	ADD (HEX)	POR Value	D7	D6	D5	D4	D3	D2	D1	D0
VSET1	0x00	0x46	VSET							
RESERVED	0x01	0x00	Reserved							
DCR	0x02	0x00	DCR					Reserved(2)		
CONFIG1	0x03	0x04	Reserved(2)					SS		
RESERVED	0x04	0x00	Reserved(2)							
RESERVED	0x05	0x8A	Reserved(2)							
RESERVED	0x06	0x82	Reserved(2)							
RESERVED	0x07	0x10	Reserved(2)							
RESERVED	0x08	0x00	Reserved(2)							
RESERVED	0x09	0x9F	Reserved(2)							
RESERVED	0x0A	0x78	Reserved(2)							
RESERVED	0x0B	0x78	Reserved(2)							
RESERVED	0x0C	0x61	Reserved(2)							
VOUT1_LSB	0x42	0x00	VOUT1					Reserved		
VOUT1_MSB	0x43	0x00	VOUT1							
VIN	0x46	0x00	VIN							
RESERVED	0x47	0x00	Reserved							
IOUTF1	0x48	0x00	IOUTF1							
IOUTP1_LSB	0x4A	0x00	IOUTP1					Reserved		
IOUTP1_MSB	0x4B	0x00	IOUTP1							
TEMP_LSB	0x4E	0x00	TEMP					Reserved		
TEMP_MSB	0x4F	0x00	TEMP							
MASTERFAULTS	0x54	0x00	Reserved					VOUT_ SHORT	VOUT_ OCP	OVER TEMP
RESERVED	0x55	0x00	Reserved							
RESERVED	0x57	0x00	Reserved(2)							
RESERVED	0x58	0x00	Reserved(2)							
RESERVED	0x5A	0x00	Reserved							
RESERVED	0x5B	0x00	Reserved(2)							
RESERVED	0x5C	0x00	Reserved(2)							
RESERVED	0x5D	0x00	Reserved(2)							
MTPWRITE	0x60	0x01	MTP_WRITE_CMD					MTPWRI TEDNE	Reserved(2)	
MTPUNLOCK	0x61	0x00	MTPUNLOCK_CMD							

Copyright ©2020 Murata Manufacturing Co., Ltd. All rights reserved.

Note :
(1) Excluding read/write bit. 01100000 (0x60) if including read/write bit.
(2) Do not change these reserved bits. We guarantee operation of the module only when these reserved bit is the initial value.

Table 7. Register map

Detailed Register Description

Register VSET1

NAME	ADDRESS	POR Value
VSET1	0x00	0x46

Bit Assignment

7	6	5	4	3	2	1	0
VSET1[7:0]							

Bit Description

Field name	Bits	Type	POR	Description
VSET1[7:0]	[7:0]	R/$\overline{W}$	01000110	VOUT1 = 2.55/255×bin2dec(VSET1<7:0>) Program VOUT1 Output Voltage in 10mV steps: Do not exceed the specified limits of the output voltage range restricted by input voltage or the converter's maximum power rating when applying this register. 00h: 0mV 01h: 10mV 02h: 20mV …… 77h: 1.19V 78h: 1.2V 79h: 1.21V

Register DCR

NAME	ADDRESS	POR Value
DCR	0x02	0x00

Bit Assignment

7	6	5	4	3	2	1	0
DCR [3:0]				Reserved			

Copyright ©2020 Murata Manufacturing Co., Ltd. All rights reserved.

Bit Description

Field name	Bits	Type	POR	Description
DCR[3:0]	[7:4]	R/$\overline{W}$	0000	DCR value for calculation of IOUT. The DCR value is written in test Production. 0000: 14.6 mΩ 0001: 15.4 mΩ 0010: 16.2 mΩ 0011: 17.0 mΩ 0100: 17.8 mΩ 0101: 18.6 mΩ 0110: 19.4 mΩ 0111: 20.2 mΩ 1000: 21.0 mΩ 1001: 21.8 mΩ 1010: 22.6 mΩ 1011: 23.4 mΩ 1100: 24.2 mΩ 1101: 25.0 mΩ 1110: 25.8 mΩ 1111: 26.6 mΩ

Register CONFIG1

NAME	ADDRESS	POR Value
CONFIG1	0x03	0x04

Bit Assignment

7	6	5	4	3	2	1	0
Reserved					SS[2:0]		

Bit Description

Field name	Bits	Type	POR	Description
SS[2:0]	[2:0]	R/$\overline{W}$	100	Program Soft start and VOUT Slew Rate: 000: 1.867mV/ms 100: 0.117mV/ms 001: 0.934mV/ms 101: 0.058mV/ms 010: 0.467mV/ms 110: 0.029mV/ms 011: 0.233mV/ms 111: 0.014mV/ms

Register VOUT1_LSB

NAME	ADDRESS	POR Value
VOUT1_LSB	0x42	0x00

Bit Assignment

7	6	5	4	3	2	1	0
VOUT1[3:0]				Reserved			

Copyright ©2020 Murata Manufacturing Co., Ltd. All rights reserved.

Bit Description

Field name	Bits	Type	POR	Description
VOUT1[3:0]	[7:4]	R	0000	Lower 4 bit of the 12-bit VOUT1 ADC result. VOUT can be calculated as: 2.55V×bin2dec(VOUT[11:0]) / 4095 All 12-bit must be read to refresh the next ADC reading.

Register VOUT1_MSB

NAME	ADDRESS	POR Value
VOUT1_MSB	0x43	0x00

Bit Assignment

7	6	5	4	3	2	1	0
VOUT1[11:4]							

Bit Description

Field name	Bits	Type	POR	Description
VOUT1[11:4]	[7:0]	R	0000 0000	Upper 8 bit of the 12-bit VOUT1 ADC result. VOUT can be calculated as: 2.55V×bin2dec(VOUT1[11:0]) / 4095 All 12-bit must be read to refresh the next ADC reading.

Register VIN

NAME	ADDRESS	POR Value
VIN	0x46	0x00

Bit Assignment

7	6	5	4	3	2	1	0
VIN[7:0]							

Bit Description

Field name	Bits	Type	POR	Description
VIN[7:0]	[7:0]	R	0000 0000	8-bit VIN ADC result. VIN can be calculated as: 20.4V×bin2dec(VIN[7:0]) / 255

Register IOUT1F

NAME	ADDRESS	POR Value
IOUT1F	0x48	0x00

Bit Assignment

7	6	5	4	3	2	1	0
IOUT1F[7:0]							

Copyright ©2020 Murata Manufacturing Co., Ltd. All rights reserved.

Bit Description

Field name	Bits	Type	POR	Description
IOUT1F[7:0]	[7:0]	R	0000 0000	IOUT1 Fast Conversion ADC result, update every 32us. IOUT1 ISNS voltage can be calculated as: V_ISNS1 = 100mV×bin2dec(IOUT1F[7:0]) / 255 IOUT can be calculated as: IOUT = V_ISNS1 / (DCR[3:0] / 2)

Register IOUT1P_LSB

NAME	ADDRESS	POR Value
IOUT1P_LSB	0x4A	0x00

Bit Assignment

7	6	5	4	3	2	1	0
IOUT1P[3:0]				Reserved			

Bit Description

Field name	Bits	Type	POR	Description
IOUT1P[3:0]	[7:4]	R	0000	Lower 4 bit of the IOUT1 Precision 12-bit ADC result, update every 128us. IOUT1 ISNS voltage can be calculated as: V_ISNS1 = 100mV×bin2dec(IOUT1P[11:0]) / 4095 IOUT can be calculated as: IOUT = V_ISNS1 / (DCR[3:0] / 2) All 12-bit must be read to refresh the next ADC reading.

Register IOUT1P_MSB

NAME	ADDRESS	POR Value
IOUT1P_MSB	0x4B	0x00

Bit Assignment

7	6	5	4	3	2	1	0
IOUT1P[11:4]							

Bit Description

Field name	Bits	Type	POR	Description
IOUT1P[11:4]	[7:0]	R	0000 0000	Upper 8 bit of the IOUT1 Precision 12-bit ADC result, update every 128us. IOUT1 ISNS voltage can be calculated as: V_ISNS1 = 100mV×bin2dec(IOUT1P[11:0]) / 4095 IOUT can be calculated as: IOUT = V_ISNS1 / (DCR[3:0] / 2) All 12-bit must be read to refresh the next ADC reading.

Copyright ©2020 Murata Manufacturing Co., Ltd. All rights reserved.

Register TEMP_LSB

NAME	ADDRESS	POR Value
TEMP_LSB	0x4E	0x00

Bit Assignment

7	6	5	4	3	2	1	0
TEMP[3:0]				Reserved			

Bit Description

Field name	Bits	Type	POR	Description
TEMP[3:0]	[7:4]	R	0000	Lower 4 bits of the 12-bit IC Temperature ADC result. IC temperature can be calculated as: TEMP (in Kelvin) = 512×bin2dec(TEMP[11:0]) / 4095 All 12-bit must be read to refresh the next ADC reading.

Register TEMP_MSB

NAME	ADDRESS	POR Value
TEMP_MSB	0x4F	0x00

Bit Assignment

7	6	5	4	3	2	1	0
TEMP[11:4]							

Bit Description

Field name	Bits	Type	POR	Description
TEMP[11:4]	[7:4]	R	0000	Upper 8 bits of the 12-bit IC Temperature ADC result. IC temperature can be calculated as: TEMP (in Kelvin) = 512×bin2dec(TEMP[11:0]) / 4095 All 12-bit must be read to refresh the next ADC reading.

Register MASTERFAULTS

NAME	ADDRESS	POR Value
MASTERFAULTS	0x54	0x00

Bit Assignment

7	6	5	4	3	2	1	0
Reserved					VOUT_ SHORT	VOUT_OCP	OVERTEMP

Copyright ©2020 Murata Manufacturing Co., Ltd. All rights reserved.

Bit Description

Field name	Bits	Type	POR	Description
VOUT_SHORT	[2]	R	0	VOUT(s) Shorted Fault: 0: No Fault 1: Fault
VOUT_OCP	[1]	R	0	VOUT(s) Over current Fault: 0: No Fault 1: Fault
OVERTEMP	[0]	R	0	IC(s) Over temperature Fault: 0: No Fault 1: Fault

Register MTPWRITE

NAME	ADDRESS	POR Value
MTPWRITE	0x60	0x01

Bit Assignment

7	6	5	4	3	2	1	0
MTPWRITE_CMD[4:0]					MTPWRITE_DNE	Reserved	

Bit Description

Field name	Bits	Type	POR	Description
MTPWRITE_CMD [4:0]	[7:3]	R/$\overline{W}$	0000 0	Setting MTPWRITE_CMD to 10010 initiates a programming cycle to burn the contents of customer registers 0x00 to 0x0B into MTP memory, which sets the POR values of the registers upon the next start-up. Since the lower three bits of this register are read-only, it is recommended to just write 0's to them (0x90 for all eight bits). Before taking this step, the user must unlock the MTP user area using register 0x61.
MTPWRITE_DNE	[1]	R	0	MTP Write Cycle Status : 0: MTP Write Command in Process. When an MTPWRITE_CMD is issued, this bit clears itself, and stays low until the MTP Write cycle completes. 1: MTP Write Cycle Complete

Register MTPUNLOCK

NAME	ADDRESS	POR Value
MTPUNLOCK	0x61	0x00

Bit Assignment

7	6	5	4	3	2	1	0
MTPUNLOCK_CMD[7:0]							

Copyright ©2020 Murata Manufacturing Co., Ltd. All rights reserved.

Bit Description

Field name	Bits	Type	POR	Description
MTPUNLOCK_ CMD[7:0]	[7:0]	R/$\overline{W}$	0000 0000	Before initiating an MTP programming cycle using register 0x60, the user needs to write the value 0x61 into this register to unlock the MTP user space.

Protections

MYTNC1R84RELA2RA provides extensive and robust protection against input and output faults and over-temperature conditions, as summarized in the following table.

FAULT MODE	PROTECTION	FAULT RESPONSE	FAULT DETECTION TIME
VIN Under-Voltage	Under voltage Lock out	Power-on reset	Immediate (V_{IN} falling)
Over Load	Over current protection	POK de-asserted; Enter hiccup mode	1ms
Output Short	Short circuit protection	POK de-asserted; Enter hiccup mode	Immediate
Over Temperature	Over temperature protection	POK de-asserted; Enter hiccup mode	160µs

Table 8. Fault Protection Detection Time and Responses

The protection does not guarantee the module operation within the recommended operating conditions. Even if the protection is operating, it may exceed the conditions, and thus may reduce the reliability of the module.

Over Current Protection and Short Circuit Protection

MYTNC1R84RELA2RA provides output over current protection and short circuit protection for load fault. When the converter load current exceeds the over current threshold for the detection time, the converter output is shut down. Following the shutdown, the converter periodically tries to recover by the startup sequence. This mode is called “hiccup” mode and continues until the load current decreases to under the over current threshold. When hiccup mode releases, the converter returns to normal operation.

Short circuit protection is incorporated for times when more rapidly shutdown is needed as output short. When the converter load current exceeds the short circuit threshold, the converter shuts down immediately and operates in hiccup mode until the load current decreases to under the short circuit threshold. When the hiccup mode releases, the converter returns to normal operation.

Over Temperature Protection

MYTNC1R84RELA2RA includes an integrated temperature sensor to protect the system from overheating. Once the converter detects over temperature longer than 160µsec, the output is turned off to reduce the power dissipation of the module. When the temperature drops below the hysteresis limit, the output is turned on again. If the underlying cause of the over-temperature fault is not cleared, the system enters into hiccup mode until the fault condition is removed.

Copyright ©2020 Murata Manufacturing Co., Ltd. All rights reserved.

Soldering Guidelines

Murata recommends the specifications below when installing this converter. These specifications vary depending on the solder type. Exceeding these specifications may cause damage to the product. Your production environment may differ, therefore, thoroughly review these guidelines with your process engineers.

REFLOW SOLDER OPETRATIONS FOR SURFACE MOUNT PRODUCTS	
For Sn/Ag/Cu based solders:	
Preheat Temperature	Less than 1°C per second
Time over Liquidus	45 to 75 seconds
Maximum Peak Temperature	260°C
Cooling Rate	Less than 3°C per second
For Sn/Pb based solder:	
Preheat Temperature	Less than 1°C per second
Time over Liquidus	60 to 75 seconds
Maximum Peak Temperature	235°C
Cooling Rate	Less than 3°C per second

Table 9. Reflow Guidelines for Sn/Ag/Cu solders and Sn/Pb solders

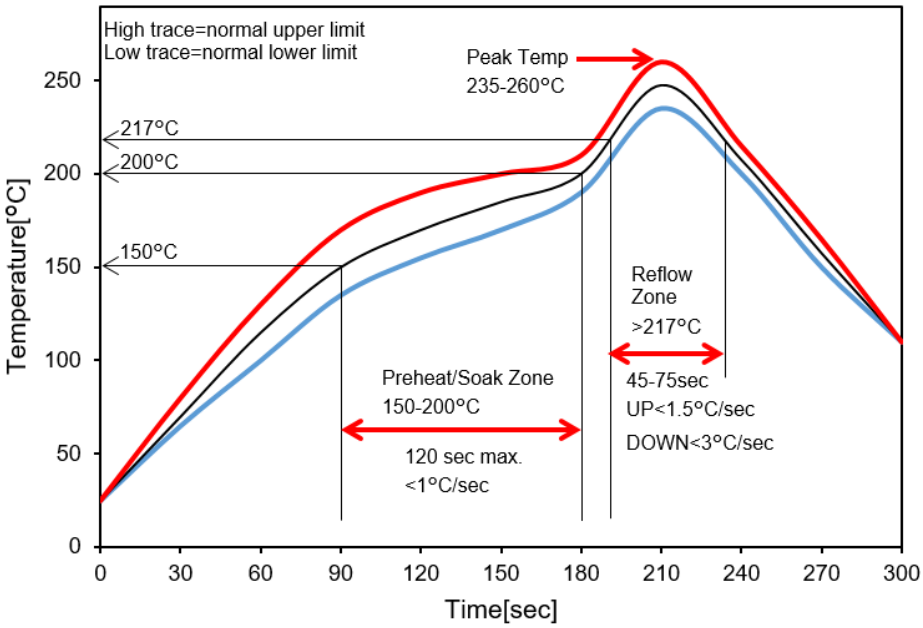

Figure 16. Reflow Profile for Sn/Ag/Cu Solder

Pb-free Solder Processes

For Pb-free solder processes, the product is qualified for MSL 3 according to IPC/JEDEC standard J-STD-020C. During reflow, the module must not exceed 260°C at any time.

Copyright ©2020 Murata Manufacturing Co., Ltd. All rights reserved.

Dry Pack Information

Products intended for Pb-free reflow soldering processes are delivered in standard moisture barrier bags according to IPC/JEDEC standard J-STD-033.
(Handling, Packing, Shipping and Use of Moisture, Reflow, and Process Sensitivity Devices).
Using products in high temperature Pb-free soldering processes requires dry pack storage and handling. In case the products have been stored in an uncontrolled environment and no longer can be considered dry, the products must be baked according to J-STD-033.

Copyright ©2020 Murata Manufacturing Co., Ltd. All rights reserved.

Application Performance

The Application Performance data is reference and based on the Application Board in Figure 40.
Ta=25°C, No forced air flow, unless otherwise noted.

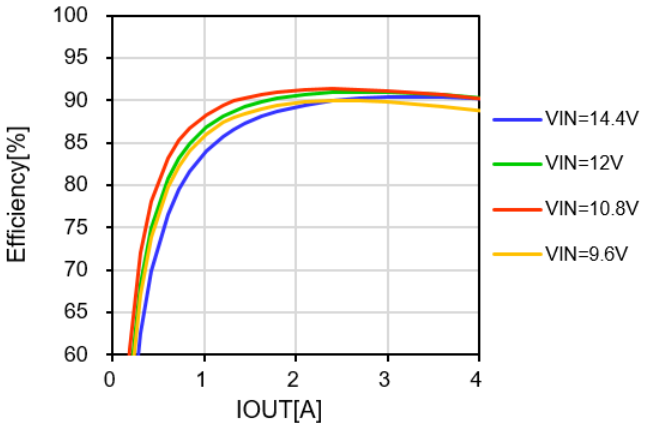

Figure 17. Efficiency vs. Load Current and Line Voltage @+25°C (VOUT=1.8V)

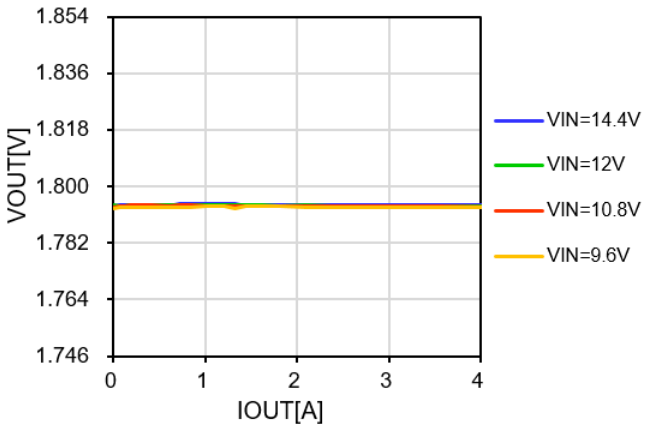

Figure 18. Vo vs. Load Current and Line Voltage @+25°C (VOUT=1.8V)

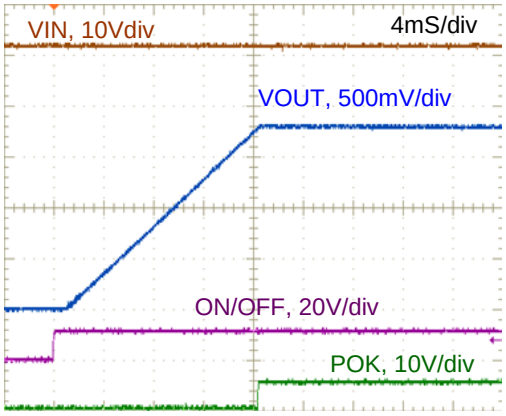

Figure 19. On/Off Enable wave form @+25°C (VIN=12V, VOUT=1.8V, IOUT=4A)

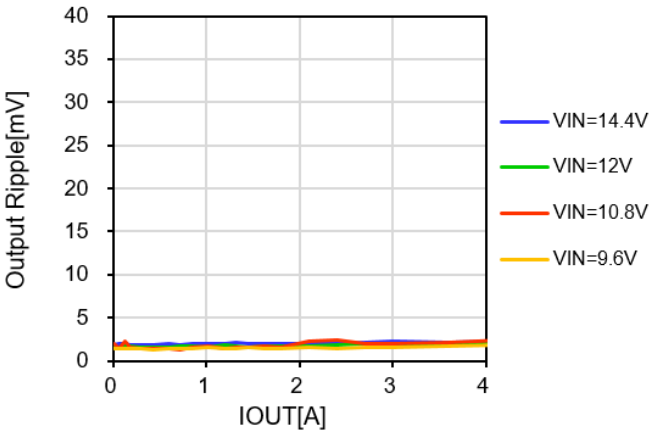

Figure 20. Output Ripple and Noise @+25°C (VOUT=1.8V, COUT=200µF, ScopeBW=20MHz)

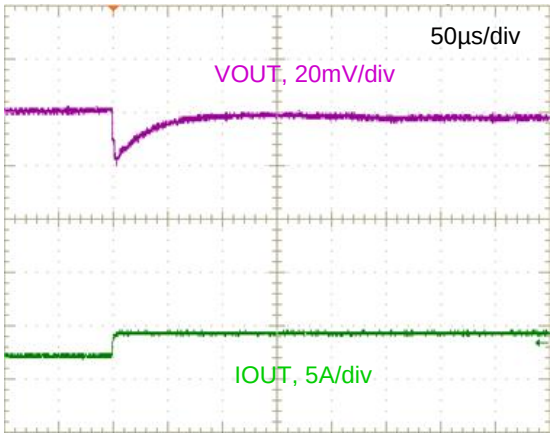

Figure 21. Step Load Transient Response (VIN=12V, VOUT=1.8V, COUT=200µF, IOUT=2 to 4A, 1.0A/µs)

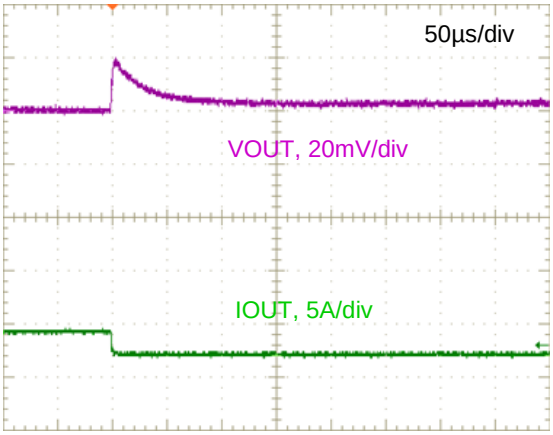

Figure 22. Step Load Transient Response (VIN=12V, VOUT=1.8V, COUT=200µF, IOUT=4 to 2A, 1.0A/µs)

Copyright ©2020 Murata Manufacturing Co., Ltd. All rights reserved.

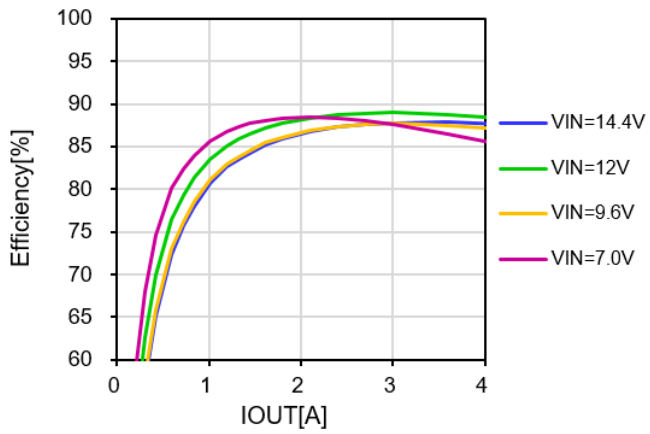

Figure 23. Efficiency vs. Load Current and Line Voltage @+25°C (VOUT=1.2V)

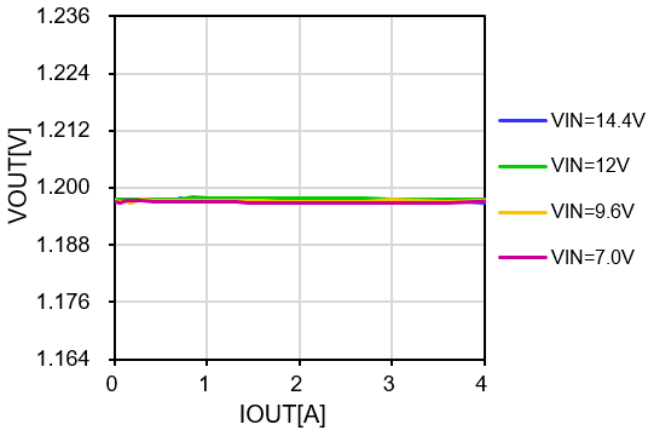

Figure 24. VOUT vs. Load Current and Line Voltage @+25°C (VOUT=1.2V)

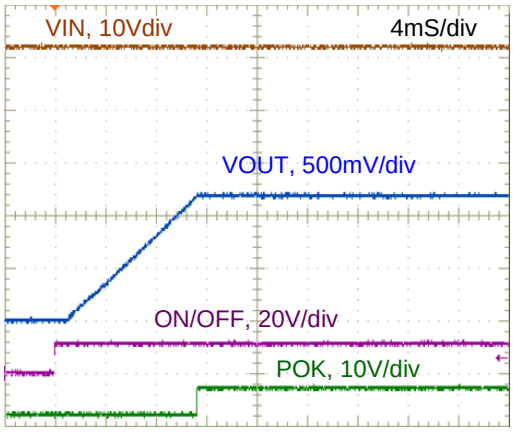

Figure 25. On/Off Enable wave form @ +25°C (VIN=12V, VOUT=1.2V, IOUT=4A)

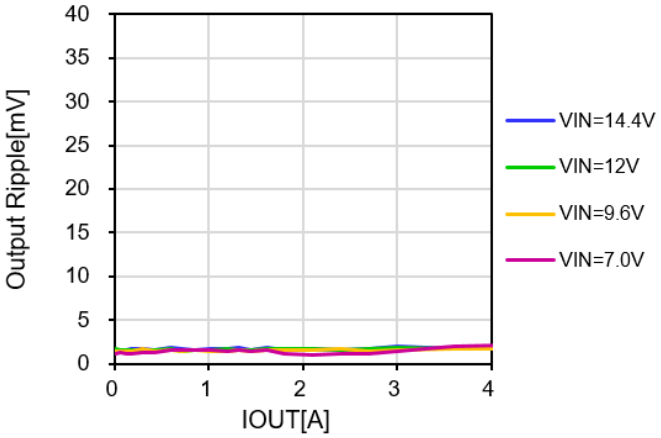

Figure 26. Output Ripple and Noise @+25°C (VOUT=1.2V, COUT=200µF, ScopeBW=20MHz)

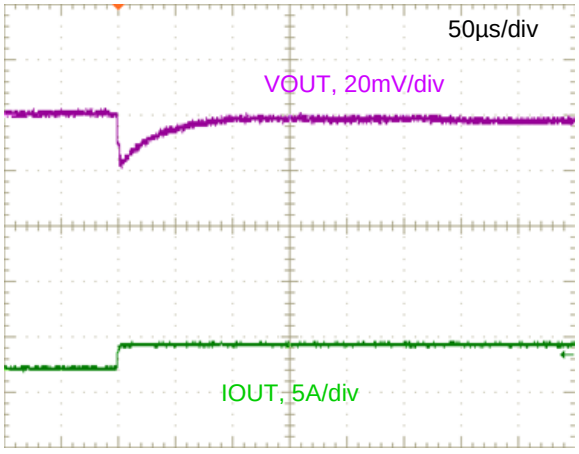

Figure 27. Step Load Transient Response (VIN=12V, VOUT=1.2V, COUT=200µF, IOUT=2 to 4A, 1.0A/µs)

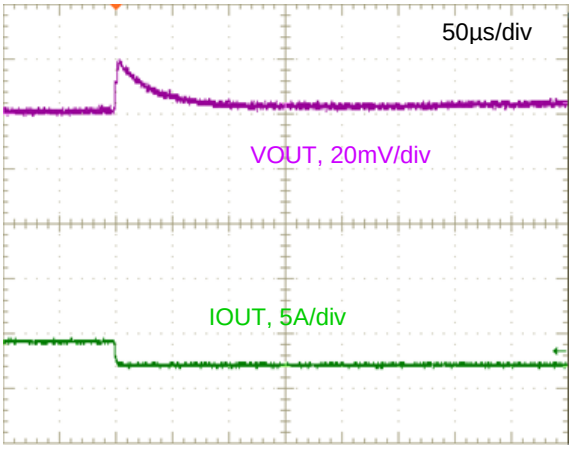

Figure 28. Step Load Transient Response (VIN=12V, VOUT=1.2V, COUT=200µF, IOUT=4 to 2A, 1.0A/µs)

Copyright ©2020 Murata Manufacturing Co., Ltd. All rights reserved.

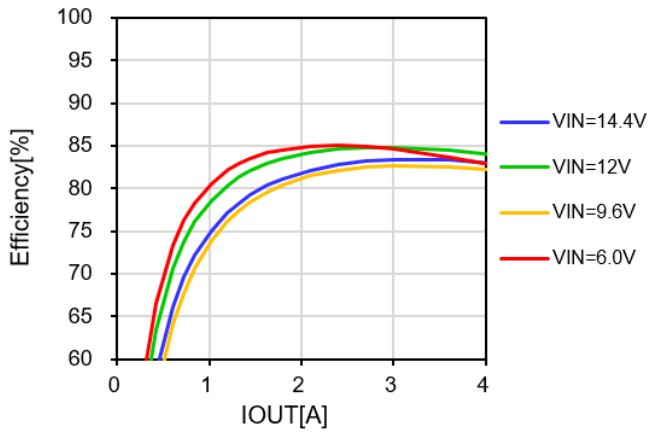

Figure 29. Efficiency vs. Load Current and Line Voltage @+25°C (VOUT=0.7V)

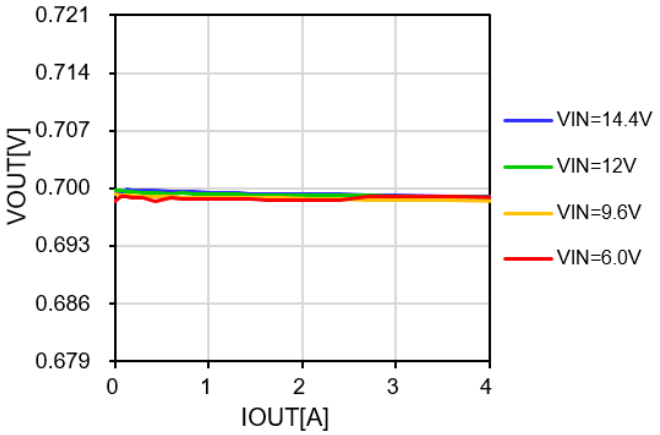

Figure 30. Vo vs. Load Current and Line Voltage @+25°C (VOUT= 0.7V)

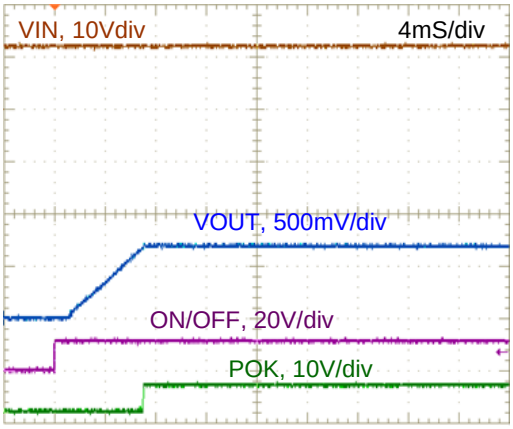

Figure 31. On/Off Enable wave form @+25°C (VIN=12V, VOUT=0.7V, IOUT=4A)

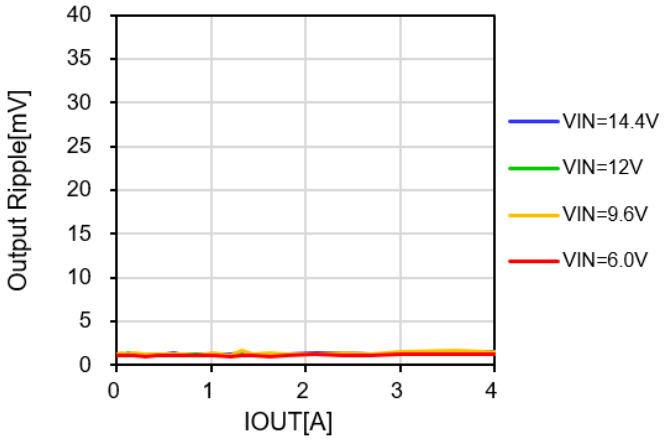

Figure 32. Output Ripple and Noise @+25°C (VOUT=0.7V, COUT=200µF, ScopeBW=20MHz)

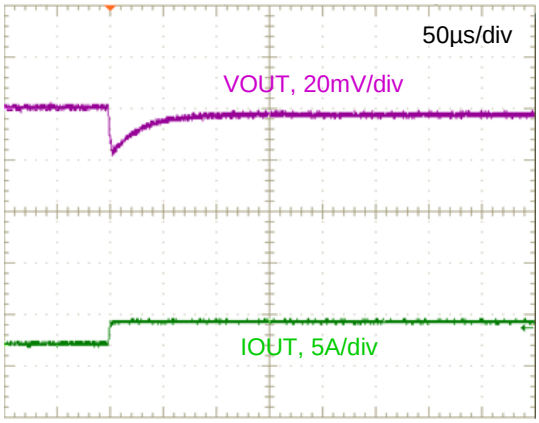

Figure 33. Step Load Transient Response (VIN=12V, VOUT=0.7V, COUT=200µF, IOUT=2 to 4A, 1.0A/µs)

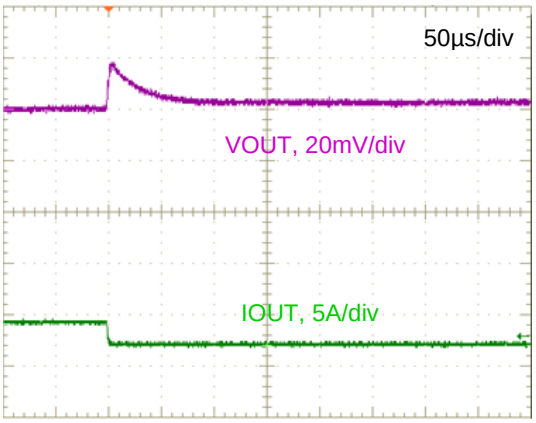

Figure 34. Step Load Transient Response (VIN=12V, VOUT=0.7V, COUT=200µF, IOUT=4 to 2A, 1.0A/µs)

Copyright ©2020 Murata Manufacturing Co., Ltd. All rights reserved.

Transient Performance

VOUT [V]	VIN [V]	COUT [µF]	VOLTAGE DEVIATION [mV]
			2A-4A LOAD STEP (1A/µs)
1.8	12	200	20.0
1.2			20.0
0.7			18.4

Table 10. Transient Performance and Conditions

Test Circuit

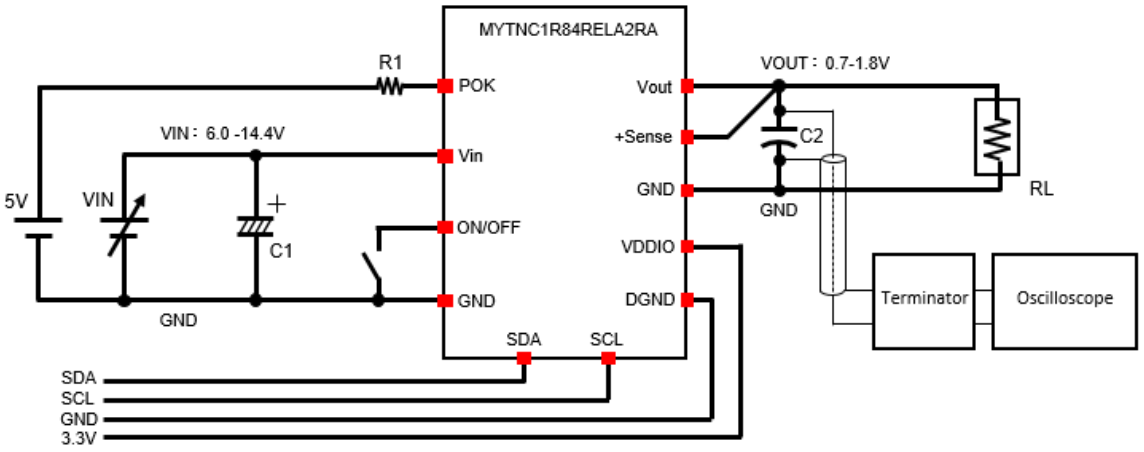

Figure 35. Test Circuit

REFERENCE	VALUE	DESCRIPTION	PART AND EQUIPMENT
C1	1000µ	Electrolysis Capacitor	-
C2	100µ x 2pcs	CAP/CER/100uF/4V/X7U/1206/20%	GRM31CE70G107MEA8 (Murata)
R1	100k	1/10W/5%	-
VIN	-	DC Power Supply	-
RL	-	Electronic Load Device	ELL-355(KeisokuGiken)
Oscilloscope	-	Digital Oscilloscope	DPO5034 or TDS5034(Tektronix)
Terminator	-	Terminator	TRC-50F2(KeisokuGiken)

Table 11. Test Circuit Parts and Equipments List

Copyright ©2020 Murata Manufacturing Co., Ltd. All rights reserved.

Component Selection

Users of MYTNC1R84RELA2RA should adhere closely to the parts selected for the reference design bill of materials (BOM). Component selection is a complex process, and several parameters of importance to the design are not typically specified for passive components. Users wishing to deviate from these components are urged to contact Murata for guidance.

Input Fuse

Certain applications and/or safety agencies may require fuses at the inputs of power conversion components. Normally, the fuse should be inserted on the primary side input supply line. For greatest safety, we recommend a fast blow fuse installed in the ungrounded input supply line of this module too. The installer must observe all relevant safety standards and regulations.
For safety agency approvals, install the converter in compliance with the end-user safety standard.

Input Capacitor

In general input environment (there are sufficient consideration about parasitic impedance and stability.), MYTNC1R84RELA2RA does not need an external input capacitor. If you want to reduce the ripple on input more, you can add the external input capacitor. The input capacitor should be placed as close to the module as possible to reduce any parasitic inductance effects. The voltage rating of the capacitor needs to be as high as the absolute maximum voltage rating for the system. The capacitor has voltage coefficient of capacitance, so you should be determine the rated value of capacitor that is taken into account the effective capacitance value at the applied VIN.

Output Capacitor

We recommend a low-ESR ceramic (Murata GRM31 series) capacitor for output. The ceramic type capacitor may be tried using either single or multiple capacitors in parallel.
The converter will achieve its rated output ripple and noise with additional external capacitor. The user may install more external output capacitance to reduce the ripple even further or for improved dynamic response.
These capacitors should be placed as closely as possible to the converter, and the output ripple measured under your load conditions. Use only as much capacitance as required to achieve your ripple and noise objectives.
Excessive capacitance can make step load recovery sluggish or possibly introduce instability or start-up failure.
Do not exceed the maximum rated output capacitance listed in the specifications. Please be careful the maximum capacitance depends on soft start setting.

Copyright ©2020 Murata Manufacturing Co., Ltd. All rights reserved.

Packaging Information

This section provides packaging data including the moisture sensitivity level, package drawing, package marking and tape-and-reel information.

Moisture Sensitivity Level

The moisture sensitivity level rating for the MYTNC1R84RELA2RA in the 10.5 x 9.0 x 2.1mm LGA package is MSL3.

Package Drawing

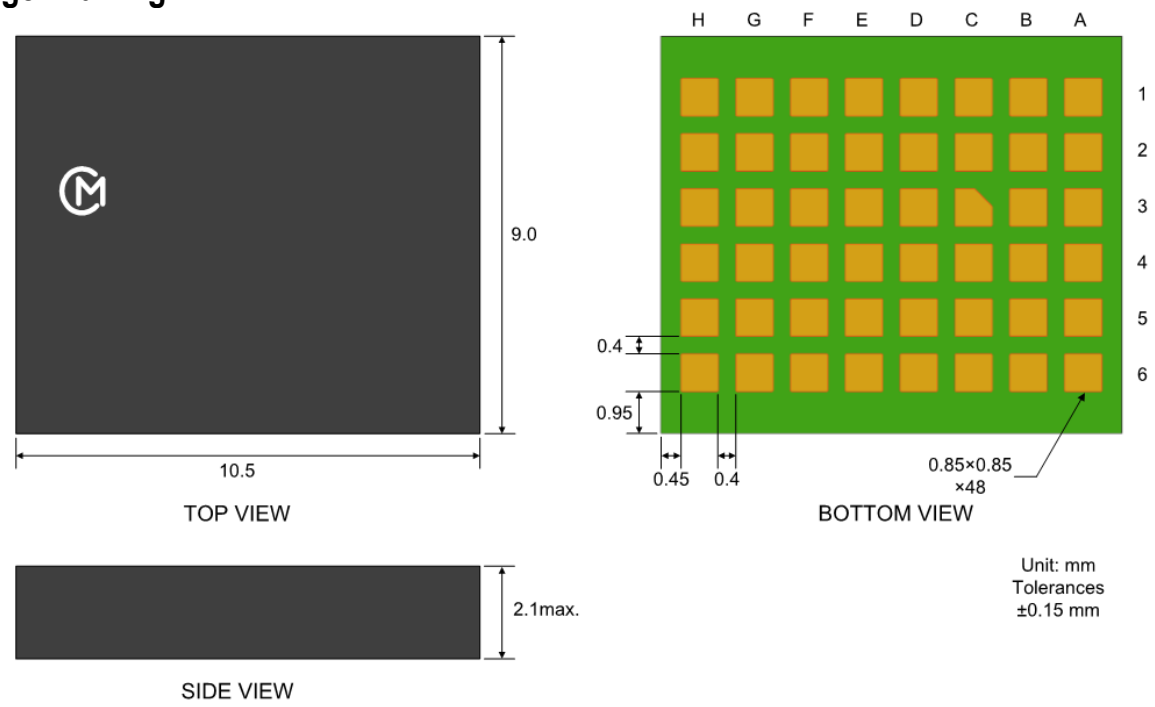

Figure 36. Package Outline Drawing

Recommended Board Land Pattern (Top View)

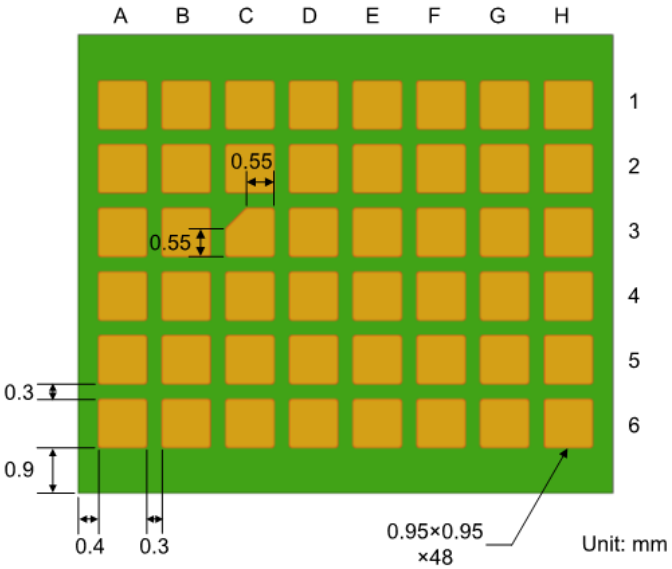

Figure 37. Recommended Board Land Pattern (Top View)

Copyright ©2020 Murata Manufacturing Co., Ltd. All rights reserved.

Top Marking Specification

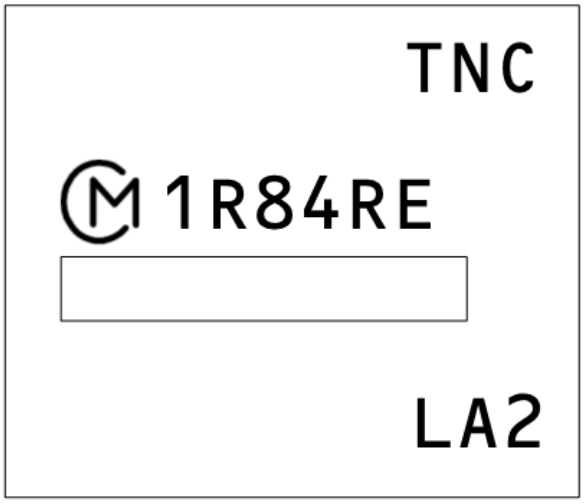

CODES	DESCRIPTION
	Pin 1 Marking
TNC1R84RELA2	Product code (Please see product code table beside)
	Internal manufacturing code

PART NUMBER	PRODUCT CODE
MYTNC1R84RELA2RA	TNC1R84RELA2

Figure 38. Top Marking Specification

Application Circuit

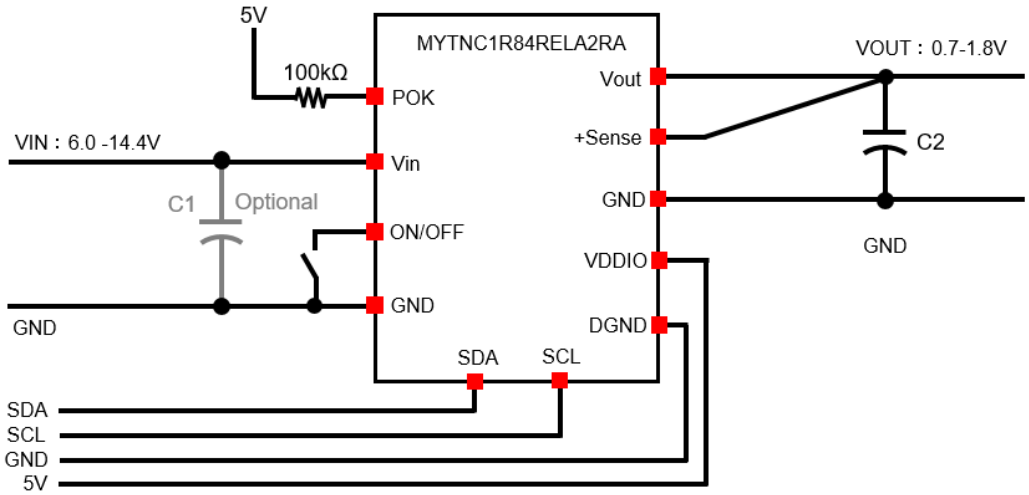

Figure 39. Application Schematic

Application Circuit Part List (Recommended)

REFERENCE	VALUE	DESCRIPTION	PART NUMBER
C1	1000u	Electrolysis Capacitor (Optional)(1)	-
C2	100u x 2pcs	CAP/CER/100µF/4V/X7U/1206/20%	GRM31CE70G107MEA8 (Murata)

Table 12. Application Circuit Part List

(1) If there is a non-negligible parasitic impedance between the power supply and the converter, such as during evaluation, the optional input capacitor "C1" may be required to reduce the impedance. The recommended optional capacitor is an example. Please consider the optimum value for the case. This capacitor is usually an aluminum electrolytic type. It isn't necessary to place the capacitor near the input terminal of the converter.

Copyright ©2020 Murata Manufacturing Co., Ltd. All rights reserved.

Application Board Example

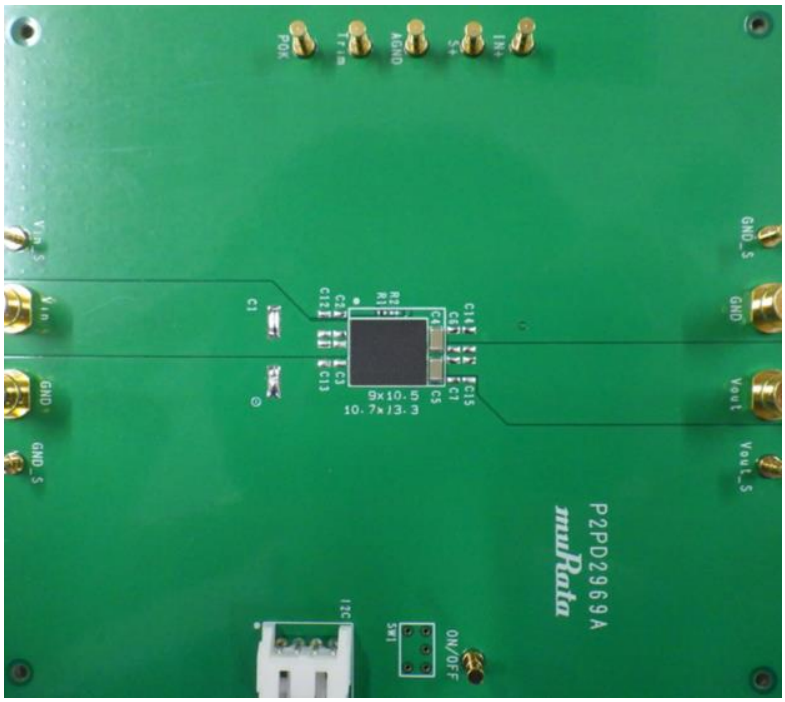

Figure 40. Applicatuin Board Example (Based on JEDEC standard)
114.5 × 101.5 × 1.6mm (4 Layer FR-4)
Outside copper(1,4) layer=2oz, Inner copper(2,3) layer=1oz

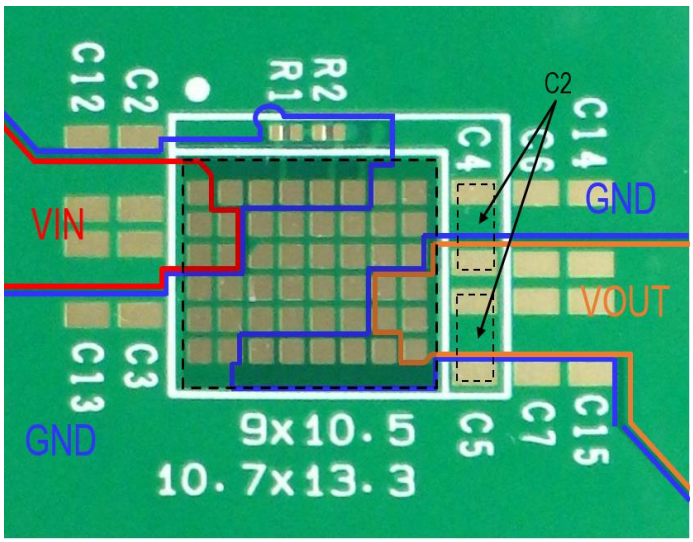

Figure 41. Land Pattern Example

Copyright ©2020 Murata Manufacturing Co., Ltd. All rights reserved.

Tape and Reel Specification

Tape Dimension

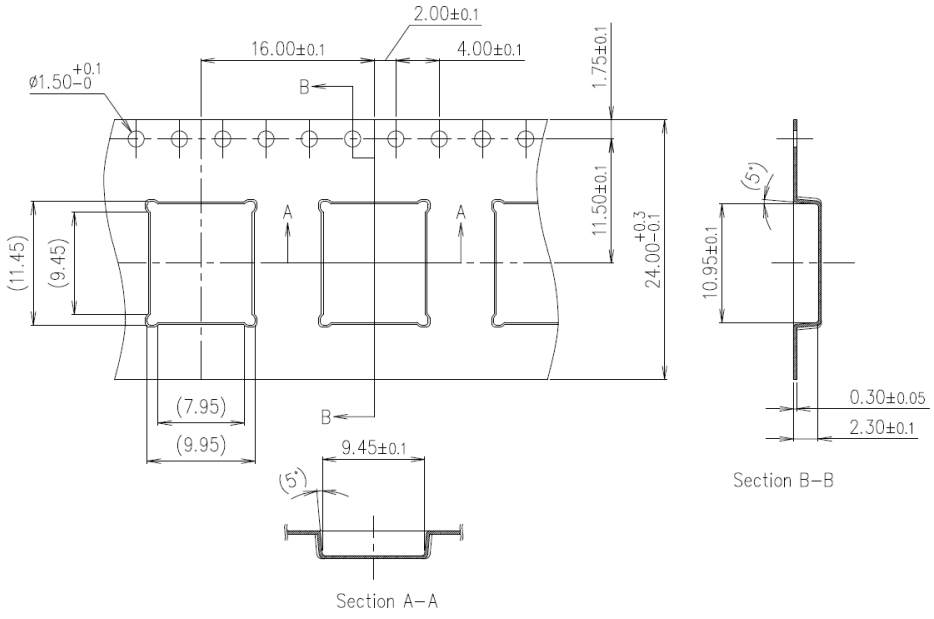

Figure 42. Tape Dimension

Reel Dimension

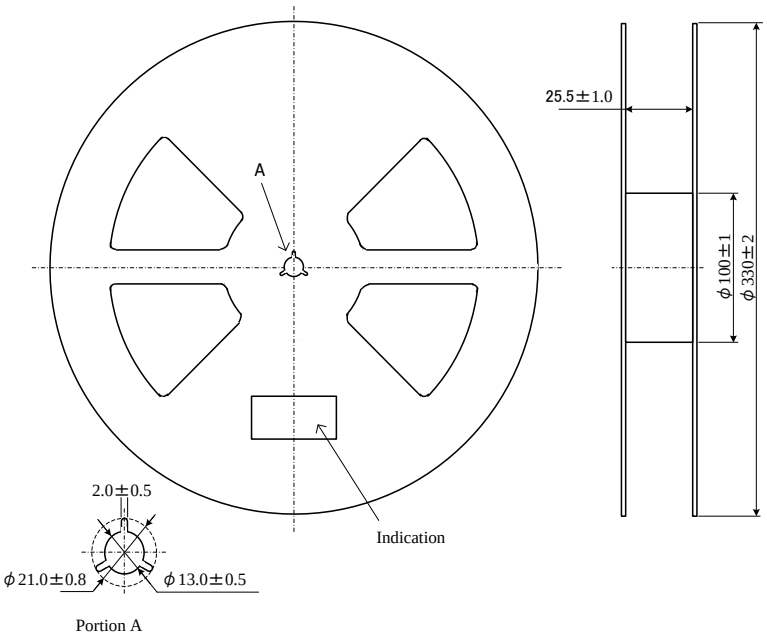

Figure 43. Reel Dimension

Copyright ©2020 Murata Manufacturing Co., Ltd. All rights reserved.

Module orientation in Tape

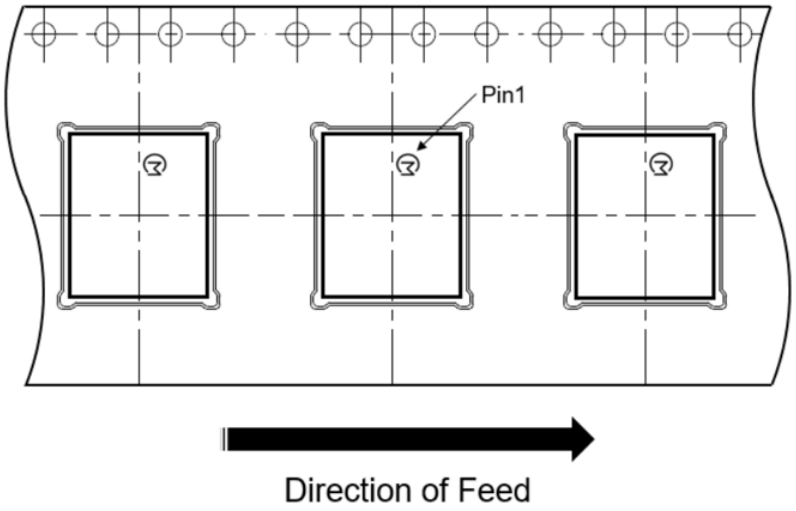

Figure 44. Module Orientation in Tape

Taping specification

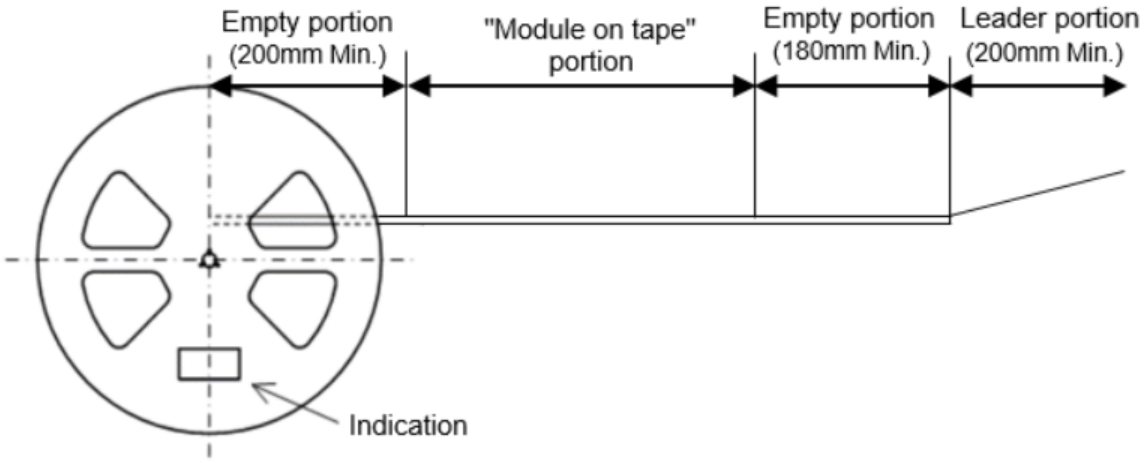

Figure 45. Taping Specification

1. The adhesive strength of the protective tape is within 0.1-1.3N.
2. Each reel contains 400 or 100pcs.
3. Each reel set in moisture-proof packaging because of MSL 3.
4. No vacant pocket in “Module on tape” section.
5. The reel is labeled with Murata part number and quantity.
6. The color of reel is not specified.

Copyright ©2020 Murata Manufacturing Co., Ltd. All rights reserved.

Order Codes

ORDER CODES	DESCRIPTION	PACKAGING	SHIPPING METHOD
MYTNC1R84RELA2RA	MYTNC1R84RELA2RA Buck Converter	10.5 x 9.0 x 2.1mm LGA	400 units/T&R
MYTNC1R84RELA2RAD	MYTNC1R84RELA2RA Buck Converter	10.5 x 9.0 x 2.1mm LGA	100 units/T&R

Table 13. Order Codes

Notices

⚠ CAUTION

Limitation of Applications

Please contact us before using our products for the applications listed below which require especially high reliability for the prevention of defects which might directly cause damage to the third party's life, body or property.

- Aircraft equipment
- Aerospace equipment
- Undersea equipment
- Power plant control equipment
- Medical equipment
- Transportation equipment (vehicles, trains, ships, etc.)
- Traffic signal equipment
- Disaster prevention / crime prevention equipment
- Data-processing equipment
- Application of similar complexity and/or reliability requirements to the applications listed in the above

⚠ Note

1. Please make sure that your product has been evaluated in view of your specifications with our product being mounted to your product.
2. You are requested not to use our product deviating from the reference specifications.
3. If you have any concerns about materials other than those listed in the RoHS directive, please contact us.
4. Be sure to provide an appropriate fail-safe function on your product to prevent a second damage that may be caused by the abnormal function or the failure of our product.
5. Please don’t wash this product under any conditions.

Copyright ©2020 Murata Manufacturing Co., Ltd. All rights reserved.

Product Specification

Product Specification in this datasheet are as of August 2020. Specifications and features may change in any manner without notice. Please check with our sales representatives or product engineers.

Sales contact

For additional information, contact Sales at **https://www.murata.com/contactform**.

Disclaimers

The information described in this data sheet was carefully crafted for accuracy. However this product is based on the assumption that it will be used after thoroughly verifying and confirming the characteristics and system compatibility. Therefore, Murata is not responsible for any damages caused by errors in the description of the datasheet.

Murata constantly strives improve the quality and reliability of our products, but it is inevitable that semiconductor products will fail with a certain probability. Therefore regardless of whether the use conditions are within the range of this data sheet, Murata is not responsible for any damage caused by the failure of this product., (for example, secondary damage, compensation for accidents, punitive damage, loss of opportunity, and etc.) Also, regardless of whether Murata can foresee the events caused by the failure of our product, Murata has no obligations or responsibilities.

The buyer of this product and developer of systems incorporating this product must analyze, evaluate, and make judgements at their own risk in designing applications using this product. The buyer and the developer are responsible for verifying the safety of this product and the applications, and complying with all applicable laws, regulations, and other requirements.

Furthermore, the buyer and developer are responsible for predicting hazards and taking adequate safeguards against potential events at your own risk in order to prevent personal accidents, fire accidents, or other social damage. When using this product, perform thorough evaluation and verification of the safety design designed at your own risk for this product and the application.

Murata assumes that the buyer and developer have the expertise to verify all necessary issues for proper use of the product as described above and to take corrective action. Therefore, Murata has no liability arising out of the use of the product. The buyer and developer should take all necessary evaluations, verifications, corrective actions and etc., in your own responsibility and judgment.

This data sheet does not guarantee or grant any license to the information, including patents, copyrights, and other intellectual property rights, of the Murata or third parties. Regardless of whether the information described in this datasheet is express or implied, Murata does not take any responsibility or liability for any claims, damages, costs, losses, etc. relating to intellectual property rights or other rights from third parties due to the use of these information.

Copyright ©2020 Murata Manufacturing Co., Ltd. All rights reserved.

Patent Statement

Murata products are protected to under one or more of the U.S. patents.

Copyright and Trademark

©2020 Murata Manufacturing Co., Ltd. All rights reserved.

This product is subject to the following operating requirements and the Life and Safety Critical Application Sales Policy.
Refer to: **https://www.murata.com/products/power/requirements**

Murata Manufacturing Co., Ltd makes no representation that the use of its products in the circuits described herein, or the use of other technical information contained herein, will not infringe upon existing or future patent rights. The descriptions contained herein do not imply the granting of licenses to make, use, or sell equipment constructed in accordance therewith. Spec and cautions are subject to change without notice.

Copyright ©2020 Murata Manufacturing Co., Ltd. All rights reserved.