Chip EMIFIL ® LC Combined Type for Large Current
NFE31PT□□□□1E9□ Reference Specification

1. Scope

This reference specification applies to Chip EMIFIL ® LC Combined Type for Large Current NFE31P Series.

2. Part Numbering

NF	E	31	PT	220	R	1E	9	L
Product ID	Structure	Dimension (L × W)	Features	Capacitance	Characteristics	Rated Voltage	Electrode	Packaging Code (L: Taping / B: Bulk)

3. Rating

Customer Part Number	Murata Part Number	Capacitance	Rated Voltage	Withstanding Voltage	Rated Current	Insulation Resistance
	NFE31PT220R1E9L	22pF ± 30%	25 V (DC)	62.5 V (DC)	6 A (DC)	1000 MΩ min.
	NFE31PT220R1E9B					
	NFE31PT470C1E9L	47pF ± $^{50}_{20}$ %				
	NFE31PT470C1E9B					
	NFE31PT101C1E9L	100pF ± $^{80}_{20}$ %				
	NFE31PT101C1E9B					
	NFE31PT221D1E9L	220pF ± $^{50}_{20}$ %				
	NFE31PT221D1E9B					
	NFE31PT471F1E9L	470pF ± $^{50}_{20}$ %				
	NFE31PT471F1E9B					
	NFE31PT152Z1E9L	1500pF ± $^{50}_{20}$ %				
	NFE31PT152Z1E9B					
	NFE31PT222Z1E9L	2200pF ± 50%				
	NFE31PT222Z1E9B					

• Operating Temperature: - 40 °C to + 85 °C • Storage Temperature: - 55 °C to + 125 °C

4. Standard Testing Condition

<Unless otherwise specified>
Temperature: Ordinary Temp. 15 °C to 35 °C
Humidity: Ordinary Humidity 25 %(RH) to 85 %(RH)

<In case of doubt>
Temperature: 20 °C ± 2 °C
Humidity: 60 %(RH) to 70 %(RH)
Atmospheric pressure: 86kPa to 106kPa

5. Style and Dimensions

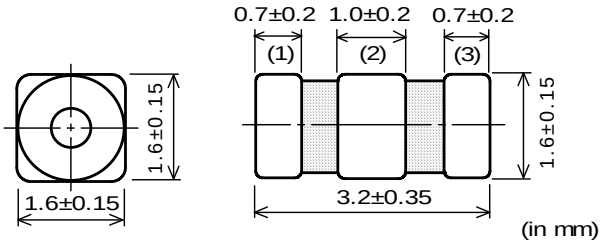

■ Equivalent Circuit

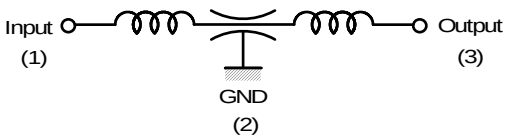

∗(1),(3):No Polarity

■ Unit Mass (Typical value)
0.034g

Note : Gap and bend between ceramic capacitor(∗1) and ferrite bead(∗2) may come out as illustrated below, however, these are not affect the performance, mounting and reliability of the products.

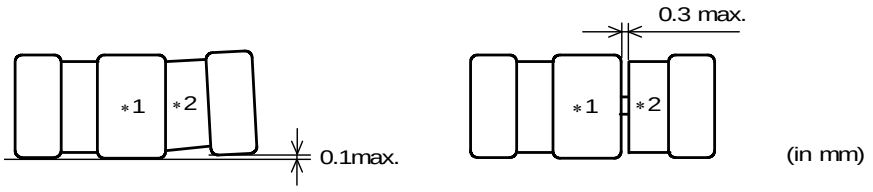

■ Insertion Loss Characteristics (I.L.) (Typ.)

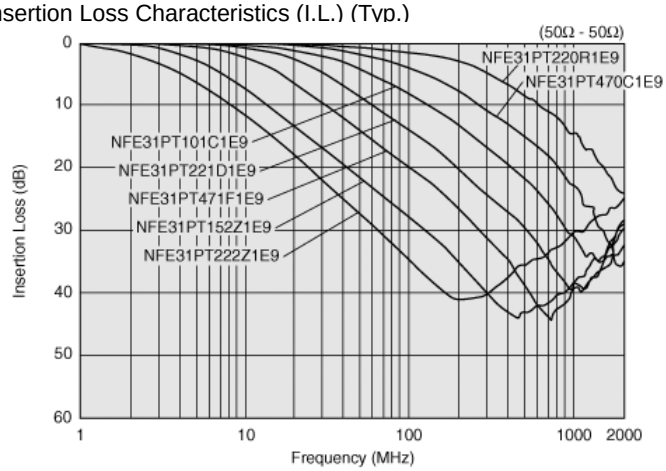

6. Marking

No marking

7. Electrical Performance

No.	Item	Specification	Test Method
7.1	Capacitance	Meet item 3.	Table 1 Capacitance / Voltage / Frequency 22 (pF) / 1 to 5 V(rms) / 1MHz ± 10% 47,100,220,470 1500 (pF) / 1±0.2 V(rms) / 1kHz ± 10% 2200 (pF) / 0.1 V(rms) max. / 1kHz ± 10%
7.2	Insulation Resistance(I.R.)		Voltage : 25 V(DC) Time : 60±5 seconds
7.3	Withstanding Voltage	Products shall not be damaged.	Test Voltage : 62.5 V(DC) Testing Time : 1 to 5 seconds Limit the charging current: 10mA max.

8. Mechanical Performance

No.	Item	Specification	Test Method
8.1	Appearance and Dimensions	Meet item 5.	Visual Inspection and measured with Slide Calipers
8.2	Solderability	The electrodes shall be at least 75% covered with new solder coating.	Flux : Ethanol solution of rosin, 25(wt)% Pre-heat : 150 ± 10 °C, 60 ~ 90 s Solder : Sn-3.0Ag-0.5Cu Solder Temperature : 240 ± 3 °C Immersion Time : 3 ± 1 s Immersion and emersion rates : 25mm / s
8.3	Resistance to soldering heat	Meet Table 2. Table 2 Appearance: No damaged Cap. Change: 22,47,100 220 (pF) within ±15%; 470,1500 2200 (pF) within ±30% I.R.: meet item 3 Withstanding Voltage: No damaged	Flux : Ethanol solution of rosin, 25(wt)% Pre-heat : 150 ± 10 °C, 60 ~ 90 s Solder : Sn-3.0Ag-0.5Cu Solder Temperature : 270 ± 5 °C (for NFE31PT152Z1E9☐ : 250±5°C) Immersion Time : 10 ± 1 s Immersion and emersion rates : 25mm / s Then measured after exposure the room condition for 4 to 48 hours.

<table>
<tr><th>No.</th><th>Item</th><th>Specification</th><th>Test Method</th></tr>
<tr><td>8.4</td><td>Bending Strength</td><td>Meet Table 3.
Table 3
<table>
<tr><td>Appearance</td><td colspan="2">No damaged</td></tr>
<tr><td rowspan="2">Cap. Change</td><td>22,47,100 220 (pF)</td><td>within ±15%</td></tr>
<tr><td>470,1500 2200 (pF)</td><td>within ±30%</td></tr>
</table></td><td>It shall be soldered on the paper-phenol substrate. (t=1.6mm)
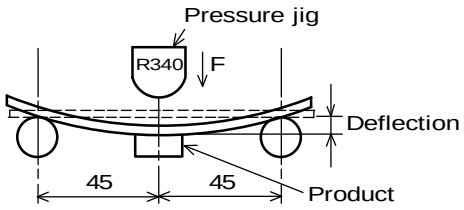

(in mm)
Deflection : 3 mm
Keeping Time : 30 seconds</td></tr>
</table>

9. Environment Performance (It shall be soldered on the substrate.)

<table>
<tr><th>No.</th><th>Item</th><th>Specification</th><th>Test Method</th></tr>
<tr><td>9.1</td><td>Humidity</td><td rowspan="2">Meet Table 4.
Table 4
<table>
<tr><td>Appearance</td><td colspan="2">No damaged</td></tr>
<tr><td rowspan="2">Cap. Change</td><td>22,47,100 220 (pF)</td><td>within ±15%</td></tr>
<tr><td>470,1500 2200 (pF)</td><td>within ±30%</td></tr>
<tr><td>I.R.</td><td colspan="2">100 MΩ min.</td></tr>
<tr><td>Withstanding Voltage</td><td colspan="2">No damaged</td></tr>
</table></td><td>Temperature : 40 ± 2 °C
Humidity : 90 to 95 %(RH)
Time : 500 h (+ 24h , - 0h)
Then measured after exposure in the room condition for 4 to 48 hours.</td></tr>
<tr><td>9.2</td><td>Heat Life</td><td>Temperature : 85 ± 2 °C
Test Voltage :
22,47,100,220(pF) : Rated Voltage × 200 %
470,1500,2200(pF) : Rated Voltage × 150 %
Time : 1000 h (+ 48h , - 0h)
Then measured after exposure in the room condition for 4 to 48 hours.</td></tr>
<tr><td>9.3</td><td>Temperature Cycling</td><td>Meet Table 2.</td><td>1 Cycle
1 step: -55 °C (+ 0°C , - 3°C) / 30 ± 3 min.
2 step: Room Temperature / within 5 min.
3 step: +125 °C (+ 3°C , - 0°C) / 30 ± 3 min.
4 step: Room Temperature / within 5 min.
Total of 10 cycles
Then measured after exposure in the room condition for 4 to 48 hours.</td></tr>
</table>

10. Specification of Packaging

10.1. Appearance and Dimensions (8mm-wide plastic tape)

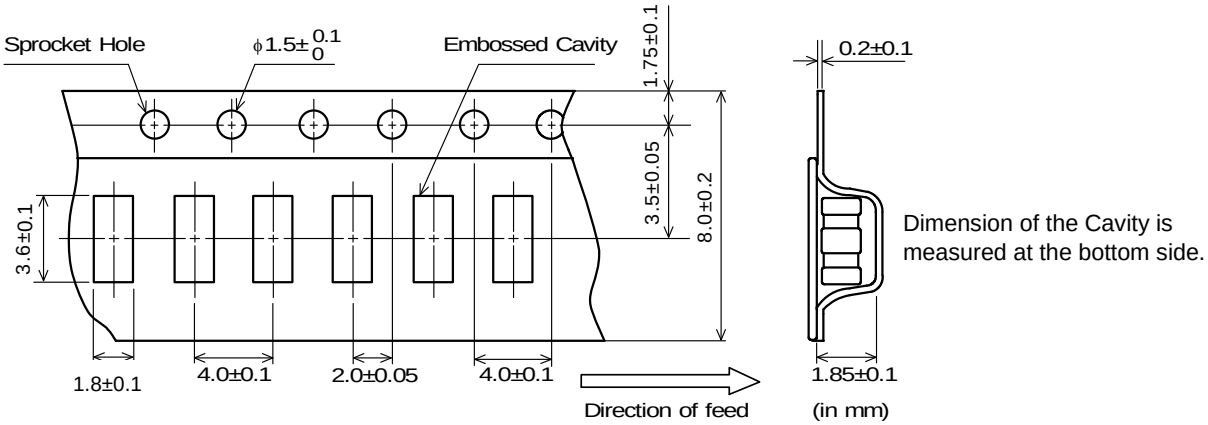

Dimension of the Cavity is measured at the bottom side.

10.2. Specification of Taping

(1) Packing quantity (standard quantity)
2000 pcs. / reel

(2) Packing Method
Products shall be packaged in the cavity of the plastic tape and sealed with cover tape.

(3) Sprocket Hole
The sprocket holes are to the right as the tape is pulled toward the user.

(4) Spliced point
The cover tape have no spliced point.

(5) Missing components number
Missing components number within 0.1% of the number per reel or 1 pc., whichever is greater, and are not continuous. The specified quantity per reel is kept.

10.3. Pull Strength of Plastic Tape and Cover Tape

Plastic tape	5N min.
Cover tape	10N min.

10.4. Peeling off force of cover tape
0.2N to 0.7N (minimum value is typical)
∗ Speed of Peeling off : 300 mm / min

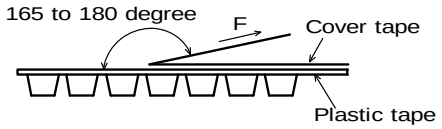

10.5. Dimensions of Leader-tape, Trailer and Reel
There shall be leader-tape (cover tape only and empty tape) and trailer-tape (empty tape) as follows.

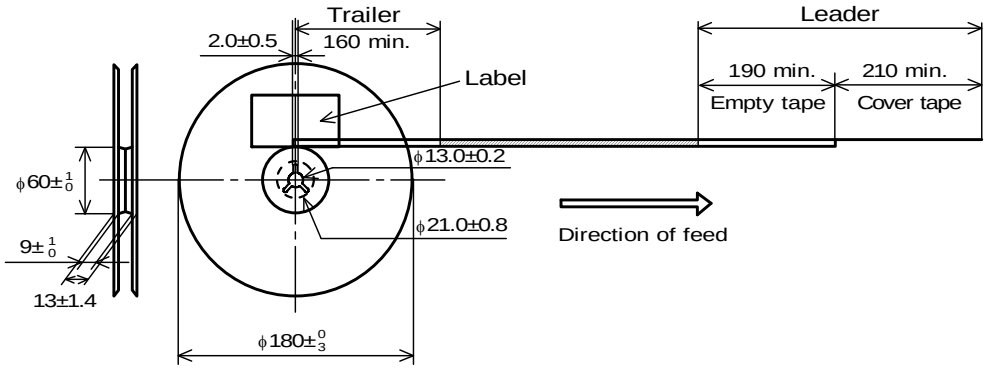

(in: mm)

10.6. Marking for reel
Customer part number , MURATA part number , Inspection number(∗1) , RoHS marking(∗2) , Quantity , etc

∗1) « Expression of Inspection No. » □□ OOOO ×××
(1) (2) (3)

(1) Factory Code
(2) Date First digit : Year / Last digit of year
Second digit : Month / Jan. to Sep. → 1 to 9, Oct. to Dec. → O, N, D
Third, Fourth digit : Day
(3) Serial No.

∗2) « Expression of RoHS marking » ROHS – Y (△)
(1) (2)

(1) RoHS regulation conformity parts.
(2) MURATA classification number

10.7. Marking for Outside package (corrugated paper box)
Customer name , Purchasing Order Number , Customer Part Number , MURATA part number , RoHS marking(∗2) , Quantity , etc

10.8. Specification of Outer Case

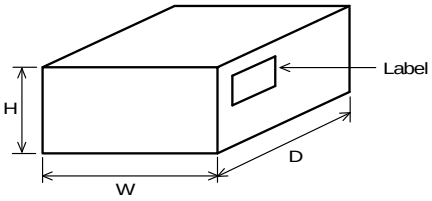

Outer Case Dimensions (mm)			Standard Reel Quantity in Outer Case (Reel)
W	D	H	
186	186	93	5

∗ Above Outer Case size is typical. It depends on a quantity of an order.

11. Standard Land Dimensions

The chip EMI filter suppresses noise by conducting the high-frequency noise element to ground.
Therefore, to get enough noise reduction, feed through holes which is connected to ground-plane should be arranged according to figure to reinforce the ground-pattern.

(Standard land dimensions for reflow)

・Side on which chips are mounted

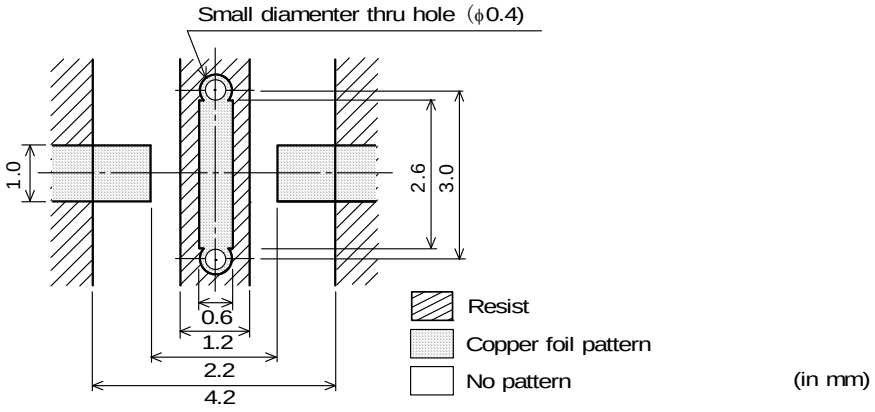

12. ⚠ Caution

Limitation of Applications

Please contact us before using our products for the applications listed below which require especially high reliability for the prevention of defects which might directly cause damage to the third party's life, body or property.
(1)Aircraft equipment (2)Aerospace equipment (3)Undersea equipment (4)Power plant control equipment
(5)Medical equipment (6)Transportation equipment(automobiles, trains, ships, etc.) (7)Traffic signal equipment
(8)Disaster prevention / crime prevention equipment (9)Data-processing equipment
(10)Applications of similar complexity or with reliability requirements comparable to the applications listed in the above

13. Notice

Products can only be soldered with reflow.
If it were soldered with flow, cracks might be caused in the ceramic body.
This product is designed for solder mounting.
Please consult us in advance for applying other mounting method such as conductive adhesive.

13.1. Flux and Solder

Flux	Use rosin-based flux, Do not use highly acidic flux (with chlorine content exceeding 0.2(wt)%). Do not use water-soluble flux.
Solder	Use Sn-3.0Ag-0.5Cu solder

13.2. Note for Assembling

< Thermal Shock >

Pre-heating should be in such a way that the temperature difference between solder and products surface is limited to 100 °C max. Also cooling into solvent after soldering should be in such a way that the temperature difference is limited to 100°C max.

13.3. Attention Regarding P.C.B. Bending

The following shall be considered when designing P.C.B.'s and laying out products.

(1) P.C.B. shall be designed so that products are not subject to the mechanical stress for board warpage.

〔Products direction〕

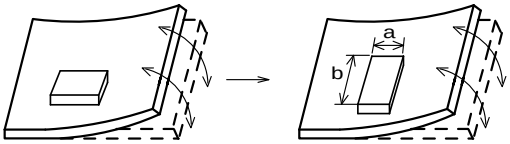

〈Poor example〉 〈Good example〉

Products shall be located in the sideways direction (Length:a<b) to the mechanical stress.

(2) Products location on P.C.B. near seam for separation.

Products (A,B,C,D) shall be located carefully so that products are not subject to the mechanical stress due to warping the board.

Because they may be subjected the mechanical stress in order of A>C>B ≅ D.

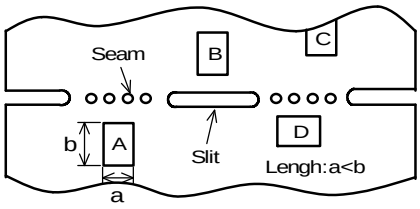

13.4. Reflow Soldering

1) Solder paste printing for reflow

・Standard thickness of the solder paste should be 150μm to 200μm.

・Use the solder cream printing pattern of the right pattern.

・For the resist and copper foil pattern, use standard land dimensions.

• Standard printing pattern of solder paste.

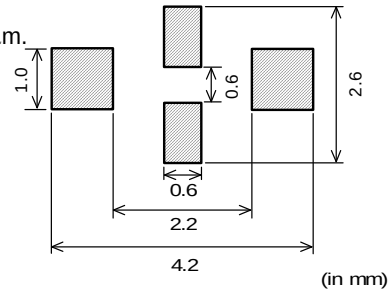

2) Soldering Conditions

Standard soldering profile and the limit soldering profile is as follows.

The excessive soldering conditions may cause leaching of the electrode and/or resulting in the deterioration of product quality.

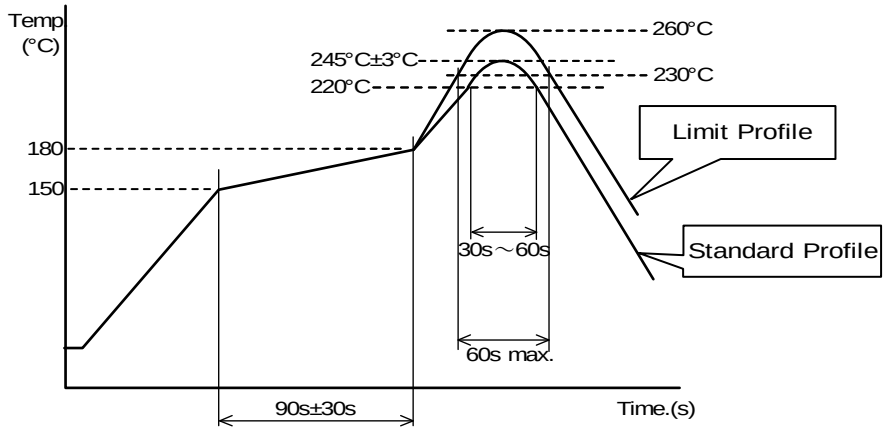

	Standard Profile	Limit Profile
Pre-heating	150°C ~ 180°C , 90s ± 30s	
Heating	above 220°C , 30s ~ 60s	above 230°C , 60s max.
Peak temperature	245°C ± 3°C	260°C , 10s
Cycle of reflow	2 times	2 times

13.5. Reworking with Soldering iron

The following conditions shall be strictly followed when using a soldering iron.

- Pre-heating: 150°C, 1 min
- Soldering iron output: 30W max.
- Tip temperature/ Soldering time: 350°C max. / 3(+1,-0) s (NFE31PT152Z1E9 : 280 °C max. / 10 s max.)
- Tip diameter: ϕ3mm max.
- Times: 2times max.

Note: Do not directly touch the products with the tip of the soldering iron in order to prevent the crack on the ceramic material due to the thermal shock.

13.6. Cleaning Conditions

Products shall be cleaned on the following conditions.

(1) Cleaning temperature shall be limited to 60 °C max. (40° C max. for IPA.)

(2) Ultrasonic cleaning shall comply with the following conditions, with avoiding the resonance phenomenon at the mounted products and P.C.B.

Power: 20W / l max. Frequency: 28kHz to 40kHz Time: 5 minutes max.

(3) Cleaner

1. Cleaner
   · Isopropyl alcohol (IPA)
2. Aqueous agent
   · PINE ALPHA ST-100S

(4) There shall be no residual flux and residual cleaner after cleaning.

In the case of using aqueous agent, products shall be dried completely after rinse with de-ionized water in order to remove the cleaner.

(5) Other cleaning

Please contact us.

13.7. Operating Environment

Do not use this product under the following environmental conditions, on deterioration of the performance, such as insulation resistance may result from the use.

(1) in the corrodible atmosphere (acidic gases, alkaline gases, chlorine, sulfur gases, organic gases and etc.)

(2) in the atmosphere where liquid such as organic solvent, may splash on the products.

13.8. Resin coating

It may affect on the product's performance when using resin for coating / molding products. So please pay your careful attention in selecting resin. In prior to use, please make the reliability evaluation with the product mounted in your application set.

13.9. Handling of a substrate

After mounting products on a substrate, do not apply any stress such as bending or twisting to the substrate when cropping the substrate, inserting and removing a connector from the substrate or tightening screw to the substrate.

Excessive mechanical stress may cause cracking in the Product.

Bending

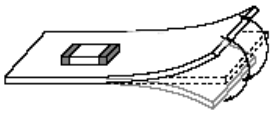

Twisting

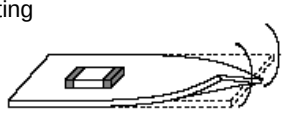

13.10. Storage condition

(1) Storage period

Use the products within 12 months after delivered.
Solderability should be checked if this period is exceeded.

(2) Storage environment condition

・Products should be storage in the warehouse on the following conditions.
Temperature : -10 °C to +40 °C
Humidity : 15% to 85% relative humidity No rapid change on temperature and humidity
・Don't keep products in corrosive gases such as sulfur, chlorine gas or acid, or it may cause oxidization of electrode, resulting in poor solderability.
・Products should be stored on the palette for the prevention of the influence from humidity, dust and so on.
・Products should be stored in the warehouse without heat shock, vibration, direct sunlight and so on.
・Products should be stored under the airtight packaged condition.

(3) Delivery

Care should be taken when transporting or handling product to avoid excessive vibration or mechanical shock.

14. ⚠ Notes

(1) Please make sure that your product has been evaluated in view of your specifications with our product being mounted to your product.
(2) You are requested not to use our product deviating from the reference specifications.
(3) The contents of this reference specification are subject to change without advance notice. Please approve our product specifications or transact the approval sheet for product specifications before ordering.