Chip Noise Filter NFZ18SM□□□SZ10D
REFERENCE SPECIFICATION [AEC-Q200]

1.Scope

This reference specification applies to Chip Noise Filter NFZ18SM_SZ10 Series for Automotive Electronics based on AEC-Q200 except for Power train and Safety.

2.Part Numbering

NF	Z	18	SM	121	S	Z	1	0	D
Product ID	Structure	Dimension (L×W)	Characteristics	Typical Impedance at 100MHz	Performance	Category	Numbers of Circuit	special specification	Packaging D:Taping *B: BULK

*B: Bulk packing also available

3.Rating+

- Operating Temperature : -55°C to +125°C
- Storage Temperature : -55°C to +125°C

Customer Part Number	MURATA Part Number	Impedance (Ω) (at 100MHz) *1 (refer to below comment)		Rated Current (mA)		DC Resistance (Ωmax.) *1 (refer to below comment)		ESD Rank 6:25kV
			Typical	85℃*2	125℃*2	Initial Values	Values After Testing	
	NFZ18SM121SZ10D	120±25%	120	1250	1100	0.14	0.24	6
	NFZ18SM251SZ10D	250±25%	250	1100	1000	0.19	0.29	
	NFZ18SM501SZ10D	500±25%	500	950	850	0.25	0.35	
	NFZ18SM701SZ10D	700±25%	700	800	800	0.29	0.39	

***1 Standard Testing Conditions**

< Unless otherwise specified >
Temperature : Ordinary Temp. (15 °C to 35 °C)
Humidity : Ordinary Humidity (25%(RH) to 85%(RH))

< In case of doubt >
Temperature : 20°C±2 °C
Humidity : 60%(RH) to 70%(RH)
Atmospheric pressure : 86kPa to 106kPa

***2** As for the rated current,
Rated Current derated as right figure depending on the operating temperature.

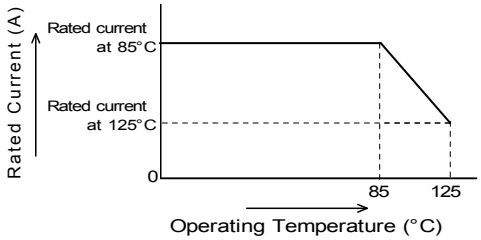

4. Appearance and Dimensions

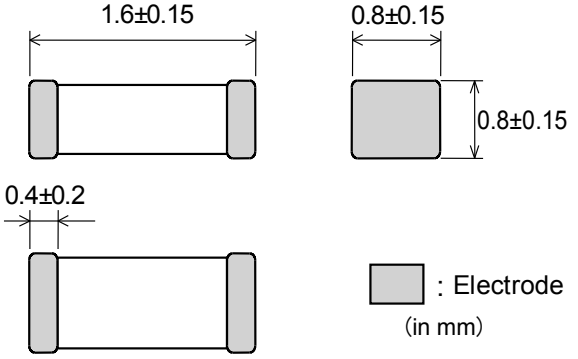

■ Equivalent Circuit

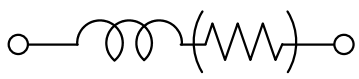

(Resistance element becomes dominant at high frequencies.)

■ Unit Mass (Typical value) 0.005g

5.Marking

No marking.

6.Electrical Performance

No.	Item	Specification	Test Method
6.1	Impedance	Meet item 3.	Measuring Frequency : 100MHz±1MHz Measuring Equipment : KEYSIGHT 4291A or the equivalent Test Fixture : Agilent 16192A or the equivalent
6.2	DC Resistance	Meet item 3.	Measuring Equipment : Digital multi meter

7. AEC-Q200 Requirement

7.1 Mechanical Performance(based on Table 13 for FILTER EMI SUPPRESSORS/FILTERS)

AEC-Q200 Rev.D issued June. 1 2010

AEC-Q200			Murata Specification / Deviation
No.	Stress	Test Method	
3	High Temperature Exposure	1000hours at 125 deg C Set for 24hours at room temperature, then measured.	Meet Table A after testing. Table A Appearance: No damage Impedance Change (at 100MHz): Within ±30% DC Resistance: Meet item 3.
4	Temperature Cycling	1000cycles -55 deg C to +125 deg C Set for 24hours at room temperature, then measured.	Meet Table A after testing.
5	Destructive Physical Analysis	Per EIA469 No electrical tests	No defects
7	Biased Humidity	1000hours at 85 deg C, 85%RH Apply max rated current.	Meet Table A after testing.
8	Operational Life	Apply 125 deg C 1000hours Set for 24hours at room temperature, then measured	Meet Table A after testing. Rated current at 125℃ is derated (Refer to 3.Rating)
9	External Visual	Visual inspection	No abnormalities
10	Physical Dimension	Meet ITEM 4 （Style and Dimensions）	No defects
12	Resistance to Solvents	Per MIL-STD-202 Method 215	Not Applicable
13	Mechanical Shock	Per MIL-STD-202 Method 213 Condition F 1500g's (14.7N)/0.5ms/ Half sine	Meet Table A after testing.
14	Vibration	5g's(0.049N) for 20 minutes, 12cycles each of 3 orientations Test from 10-2000Hz.	Meet Table A after testing.

AEC-Q200			Murata Specification / Deviation
No	Stress	Test Method	
15	Resistance to Soldering Heat	Solder temperature 260C+/-5 deg C Immersion time 10s	Pre-heating:150C +/-10 deg,60s to 90s Meet Table A after testing.
17	ESD	Per AEC-Q200-002	Meet Table A after testing. ESD Rank: Meet Item6. (Rating)
18	Solderability	Per J-STD-002	Method b : Not Applicable 95% of the terminations is to be soldered.
19	Electrical Characterization	Measured : Impedance	No defects
20	Flammability	Per UL-94	Not Applicable
21	Board Flex	Epoxy-PCB(1.6mm) Deflection 2mm(min) 60s minimum holding tim	Meet Table A after testing.
22	Terminal Strength	Per AEC-Q200-006	No defects
30	Electrical Transient Conduction	Per ISO-7637-2	Not Applicable

8.Specification of Packaging

8.1 Appearance and Dimensions (8mm-wide paper tape)

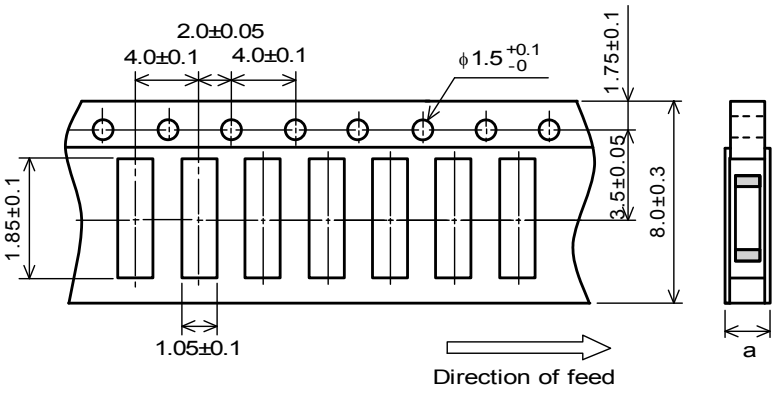

(in mm)

Dimension of the Cavity is measured at the bottom side.

8.2 Specification of Taping

(1) Taping

Products shall be packaged in the cavity of the base tape of 8mm-wide,4mm-pitch continuously and sealed by top tape and bottom tape.

(2) The sprocket holes are to the right as the tape is pulled toward the user.

(3) Spliced point:The base tape and top tape have no spliced point

(4) Cavity:There shall not be burr in the cavity.

(5) Missing components number

Missing components number within 0.1% of the number per reel or 1 pc., whichever is greater, and are not continuous. The specified quantity per reel are kept.

8.3 Tape Strength

(1)Pull Strength

Top tape	5N min.
Bottom tape	

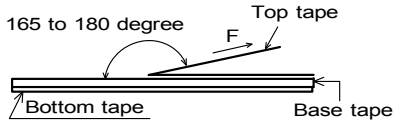

(2)Peeling off force of Top tape
0.1N to 0.6N (Minimum value is typical.)
*Speed of Peeling off:300mm/min

8.4 Taping Condition

(1)Standard quantity per reel
Quantity per 180mm reel: 4000 pcs. / reel

(2)There shall be leader-tape (top tape and empty tape) and trailer- tape(empty tape) as follows.

(3)On paper tape, the top tape and the base tape shall not be adhered at the tip of the empty leader tape for more than 5 pitch.

(4)Marking for reel
The following items shall be marked on a label and the label is stuck on the reel.
(Customer part number, MURATA part number, Inspection number(∗1) , RoHS marking (∗2) , Quantity, etc)

∗1) « Expression of Inspection No. » □□ (1) OOOO (2) ××× (3)

(1) Factory Code
(2) Date First digit : Year / Last digit of year
Second digit : Month / Jan. to Sep. → 1 to 9, Oct. to Dec. → O, N, D
Third, Fourth digit : Day
(3) Serial No.

∗2) « Expression of RoHS marking » ROHS – Y (△)
(1) (2)

(1) RoHS regulation conformity parts.
(2) MURATA classification number

(5)Outside package
These reels shall be packed in the corrugated cardboard package and the following items shall be marked on a label and the label is stuck on the box.
(Customer name, Purchasing order number, Customer part number, MURATA part number, RoHS discrimination(∗2) ,Quantity, etc)

(6)Dimensions of reel and taping(leader-tape, trailer-tape)

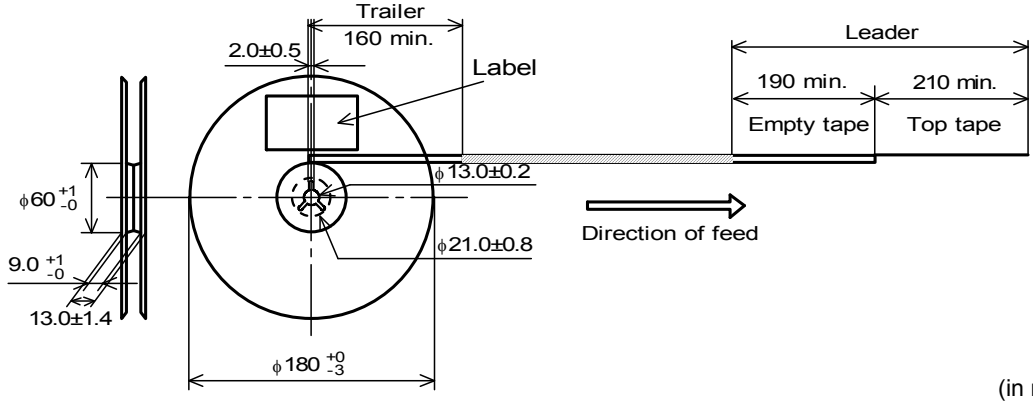

(in mm)

8.5 Specification of Outer Case

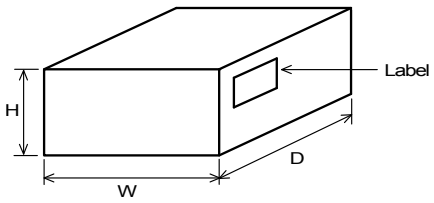

Outer Case Dimensions (mm)			Standard Reel Quantity in Outer Case (Reel)
W	D	H	
186	186	93	5

∗ Above Outer Case size is typical. It depends on a quantity of an order.

9. ⚠ Caution

9.1 Rating

Do not use products beyond the Operating Temperature Range and Rated Current.

9.2 Surge current

Excessive surge current (pulse current or rush current) than specified rated current applied to the product may cause a critical failure, such as an open circuit, burnout caused by excessive temperature rise.
Please contact us in advance in case of applying the surge current.

9.3 Fail Safe

Be sure to provide an appropriate fail-safe function on your product to prevent from a second damage that may be caused by the abnormal function or the failure of our products.

9.4 Limitation of Applications

Please contact us before using our products for the applications listed below which require especially high reliability for the prevention of defects which might directly cause damage to the third party's life, body or property.

(1)Aircraft equipment
(2)Aerospace equipment
(3)Undersea equipment
(4)Power plant control equipment
(5)Medical equipment
(6)Disaster prevention / crime prevention equipment
(7)Traffic signal equipment
(8)Transportation equipment (trains,ships,etc.)
(9)Applications of similar complexity and /or reliability requirements to the applications listed in the above

10. Notice

This product is designed for solder mounting.
Please consult us in advance for applying other mounting method such as conductive adhesive.

10.1 Land pattern designing

- Standard land dimensions

< For NFZ18SM type >

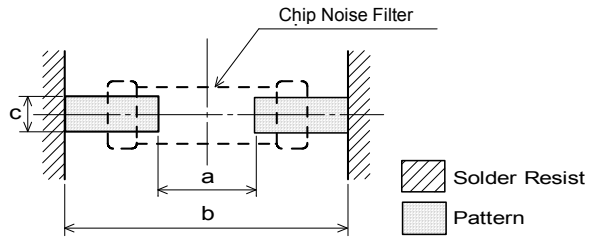

Soldering	a	b	c
Flow	0.7	2.2 to 2.6	0.7
Reflow		1.8 to 2.0	

(in mm)

10.2 Soldering Conditions

Products can be applied to reflow and flow soldering.

(1) Flux,Solder

Flux	Use rosin-based flux, but not highly acidic flux (with chlorine content exceeding 0.2(wt)%.) Do not use water-soluble flux.
Solder	Use Sn-3.0Ag-0.5Cu solder Standard thickness of solder paste : 100 μm to 200 μm

(2) Soldering conditions

- Pre-heating should be in such a way that the temperature difference between solder and ferrite surface is limited to 150℃ max. Also cooling into solvent after soldering should be in such a way that the temperature difference is limited to 100℃ max.
  Insufficient pre-heating may cause cracks on the ferrite, resulting in the deterioration of product quality.
- Standard soldering profile and the limit soldering profile is as follows.
  The excessive limit soldering conditions may cause leaching of the electrode and / or resulting in the deterioration of product quality.

(3)soldering profile

☐Flow soldering profile

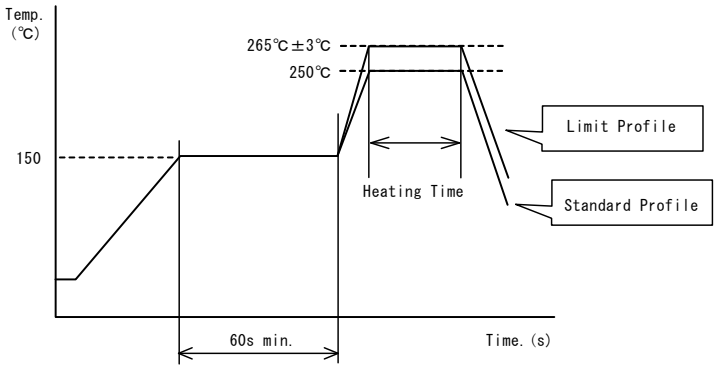

	Standard Profile	Limit Profile
Pre-heating	150℃、60s min.	
Heating	250℃、4～6s	265℃±3℃、5s max.
Cycle of flow	2 times	2 times

☐Reflow soldering profile

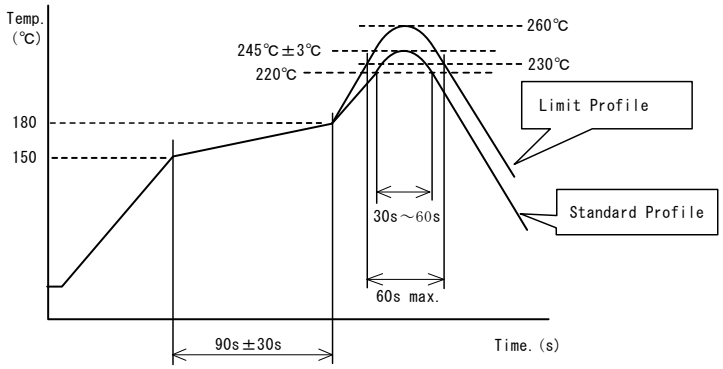

	Standard Profile	Limit Profile
Pre-heating	150～180°C 、90s±30s	
Heating	above 220°C、30s～60s	above 230°C、60s max.
Peak temperature	245±3°C	260°C,10s
Cycle of reflow	2 times	2 times

10.3 Reworking with soldering iron

- Pre-heating: 150°C, 1 min
- Soldering iron output: 80W max.
- Tip temperature: 350°C max.
- Tip diameter: ϕ 3mm max.
- Soldering time : 3(+1,-0) seconds.
- Times : 2times max.

Note :Do not directly touch the products with the tip of the soldering iron in order to prevent the crack on the ferrite material due to the thermal shock.

10.4 Solder Volume

Solder shall be used not to be exceeded as shown below.

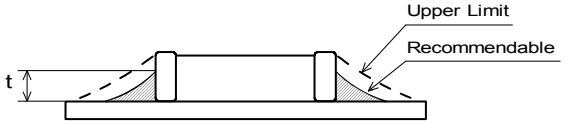

1/3T≦t≦T
(T:Chip thickness)

Accordingly increasing the solder volume, the mechanical stress to product is also increased.
Exceeding solder volume may cause the failure of mechanical or electrical performance.

10.5 Attention regarding P.C.B. bending

The following shall be considered when designing and laying out P.C.B.'s.

(1) P.C.B. shall be designed so that products are not subject to the mechanical stress for board warpage.

<Products direction>

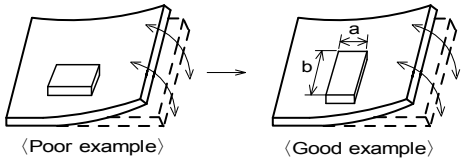

Products shall be located in the sideways direction (Length:a<b) to the mechanical stress.

(2)Components location on P.C.B. separation.

It is effective to implement the following measures, to reduce stress in separating the board.
It is best to implement all of the following three measures; however, implement as many measures as possible to reduce stress.

Contents of Measures	Stress Level
(1) Turn the mounting direction of the component parallel to the board separation surface.	A > D *1
(2) Add slits in the board separation part.	A > B
(3) Keep the mounting position of the component away from the board separation surface.	A > C

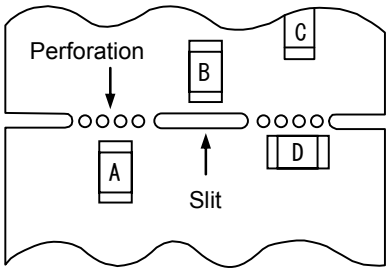

*1 A > D is valid when stress is added vertically to the perforation as with Hand Separation.
If a Cutting Disc is used, stress will be diagonal to the PCB, therefore A > D is invalid.

(3) Mounting Components Near Screw Holes

When a component is mounted near a screw hole, it may be affected by the board deflection that occurs during the tightening of the screw. Mount the component in a position as far away from the screw holes as possible.

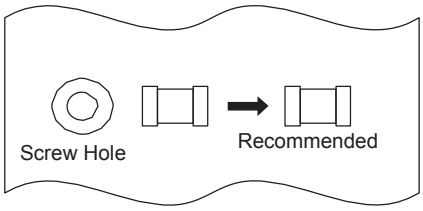

10.6 Mounting density

Add special attention to radiating heat of products when mounting the inductor near the products with heating. The excessive heat by other products may cause deterioration at joint of this product with substrate.

10.7 Operating Environment

Do not use this product under the following environmental conditions, on deterioration of the Insulation Resistance of the Ferrite material and/or corrosion of Inner Electrode may result from the use.

(1) in the corrodible atmosphere (acidic gas, alkaline gas, chlorine, sulfur gas, organic gas and etc.)
(2) in the atmosphere where liquid such as organic solvent, may splash on the products.
(3) in the atmosphere where the temperature / humidity changes rapidly and it is easy to dew.

10.8 Resin coating

The impedance value may change and/or it may affect on the product's performance due to high cure-stress of resin to be used for coating / molding products. So please pay your careful attention when you select resin. In prior to use, please make the reliability evaluation with the product mounted in your application set.

10.9 Cleaning Conditions

Products shall be cleaned on the following conditions.

(1)Cleaning temperature shall be limited to 60°C max. (40°C max. for IPA.)

(2)Ultrasonic cleaning shall comply with the following conditions, avoiding the resonance phenomenon at the mounted products and P.C.B.

Power:20W/ℓ max. Frequency:28kHz to 40kHz Time:5 min max.

(3)Cleaner

1.Alternative cleaner

- Isopropyl alcohol (IPA)

2.Aqueous agent

- PINE ALPHA ST-100S

(4)There shall be no residual flux and residual cleaner after cleaning.
In the case of using aqueous agent, products shall be dried completely after rinse with de-ionized water in order to remove the cleaner.

(5)Other cleaning

Please contact us.

10.10 Handling of a substrate

After mounting products on a substrate, do not apply any stress to the product caused by bending or twisting to the substrate when cropping the substrate, inserting and removing a connector from the substrate or tightening screw to the substrate.
Excessive mechanical stress may cause cracking in the product.

Bending

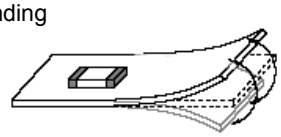

Twisting

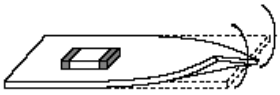

10.11 Storage Conditions

(1)Storage period

Use the products within 6 months after delivered.
Solderability should be checked if this period is exceeded.

(2)Storage conditions

- Products should be stored in the warehouse on the following conditions.
  Temperature : -10°C to 40°C
  Humidity : 15% to 85% relative humidity
  No rapid change on temperature and humidity
- Don't keep products in corrosive gases such as sulfur, chlorine gas or acid, or it may cause oxidization of electrode, resulting in poor solderability.
- Products should be stored on the palette for the prevention of the influence from humidity, dust and so on.
- Products should be stored in the warehouse without heat shock, vibration, direct sunlight and so on.
- Products should be stored under the airtight packaged condition.

(3)Delivery

Care should be taken when transporting or handling product to avoid excessive vibration or mechanical shock.

11. ⚠ Note

(1) Please make sure that your product has been evaluated in view of your specifications with our product being mounted to your product.

(2) You are requested not to use our product deviating from the reference specifications.

(3) The contents of this reference specification are subject to change without advance notice.
Please approve our product specifications or transact the approval sheet for product specifications before ordering.