CHIP NOISE FILTER NFZ32BW□□□HZ11□

Murata Standard Reference Specification【AEC-Q200】

1.Scope

This reference specification applies to Chip Noise Filter NFZ32BW_HZ11 series for Automotive Electronics based on AEC-Q200 except for Power train and Safety.

2.Part Numbering

(ex)	NF	Z	32	BW	3R6	H	Z	1	1	L
	Product ID	Structure	Dimension (L×W)	Features	Impedance	Performance	Category	Numbers of Circuit	Other	Packaging L:Taping

3.Rating

- Operating Temperature Range

(Ambient temperature; Self-temperature rise is not included) -40 to +105°C
(Product temperature; Self- temperature rise is included) -40 to +125°C

- Storage Temperature Range. -40 to +125°C

Customer Part Number	MURATA Part Number	Impedance at 1MHz		DC Resistance		*1 Rated Current(mA)		ESD 5A: 8kV
		(Ω)	Tolerance	(Ω)	Tolerance	*2 Ambient temperature 85°C	*3 Ambient temperature 105°C	
	NFZ32BW3R3HZ11L	3.3	±30%	0.024	±20%	2900	1490	5A
	NFZ32BW6R8HZ11L	6.8		0.036		2500	1380	
	NFZ32BW8R4HZ11L	8.4		0.048		2400	1360	
	NFZ32BW9R8HZ11L	9.8		0.053		2100	1110	
	NFZ32BW120HZ11L	12		0.064		1850	910	
	NFZ32BW190HZ11L	19		0.089		1800	900	
	NFZ32BW210HZ11L	21		0.100		1550	800	
	NFZ32BW310HZ11L	31		0.155		1200	610	
	NFZ32BW520HZ11L	52		0.220		1100	550	
	NFZ32BW650HZ11L	65		0.295		900	450	
	NFZ32BW101HZ11L	100		0.475		900	330	
	NFZ32BW151HZ11L	150		0.685		700	270	

*1: As for the rated current, rated current derated as figure.1 depending on the operating temperature.
*2: When applied rated current to the Products, temperature rise caused by self heating will be 40°C or less.
*3: When applied rated current to the Products, temperature rise caused by self heating will be 20°C or less.

Fugure. 1

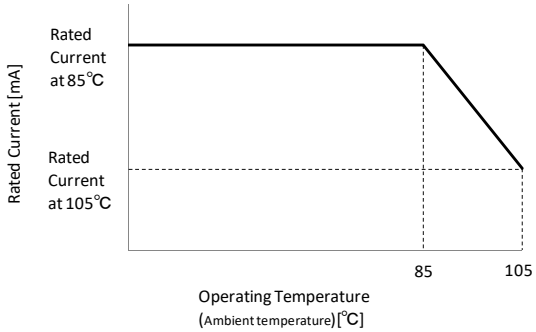

4. Testing Conditions

《Unless otherwise specified》
Temperature : Ordinary Temperature (15 to 35°C)
Humidity : Ordinary Humidity (25 to 85 %(RH)

《In case of doubt》
Temperature : 20 ± 2°C
Humidity : 60 to 70 %(RH)
Atmospheric Pressure : 86 to 106 kPa

5.Appearance and Dimensions

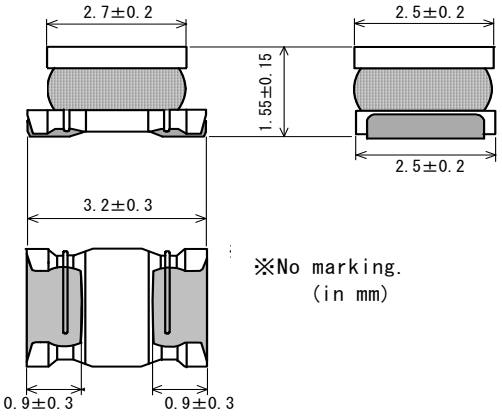

※No marking.
(in mm)

■Unit Mass（Typical value）
0.044 g

6.Electrical Performance

No.	Item	Specification	Test Method
6.1	Impedance	Impedance shall meet item 3.	Measuring Equipment : KEYSIGHT 4192A or equivalent Measuring Frequency: 1MHz
6.2	DC Resistance	DC Resistance shall meet item 3.	Measuring Equipment: Digital multi meter

7. AEC-Q200 Requirement

7.1 Performance (based on Table 5 for Magnetics(Inductors / Transformer)
AEC-Q200 Rev.D issued June. 1 2010

AEC-Q200			Murata Specification / Deviation
No	Stress	Test Method	
3	High Temperature Exposure	1000hours at 125 deg C Set for 24hours at room temperature, then measured.	Meet Table A after testing. Table A Appearance: No damage Impedance(at 1MHz): Within ±10% DC Resistance Change: Within ±10%
4	Temperature Cycling	1000cycles -40 deg C to + 105deg C Set for 24hours at room temperature,then measured.	Meet Table A after testing.
7	Biased Humidity	1000hours at 85 deg C, 85%RH unpowered.	Meet Table A after testing.
8	Operational Life	Apply Rated Current 85 deg C 1000 hours Set for 24hours at room temperature, then measured	Meet Table A after testing.
9	External Visual	Visual inspection	No abnormalities
10	Physical Dimension	Meet ITEM 5 （Style and Dimensions）	No defects
12	Resistance to Solvents	Per MIL-STD-202 Method 215	Not Applicable

AEC-Q200			Murata Specification / Deviation
No	Stress	Test Method	
13	Mechanical Shock	Per MIL-STD-202 Method 213 Condition C 100g's/6ms/Half sine	Meet Table A after testing.
14	Vibration	5g's for 20 minutes, 12cycles eah of 3 orientations Test from 10-2000Hz.	Meet Table A after testing.
15	Resistance to Soldering Heat	No-heating Solder temperature 260C+/-5 deg C Immersion time 10s	Pre-heating: 150 to 180C /90±30s Meet Table A after testing.
17	ESD	Per AEC-Q200-002	ESD Rank: Refer to Item 3. Rating No defects
18	Solderbility	Per J-STD-002	Method b : Not Applicable 95% of the terminations is to be soldered. (Except exposed wire)
19	Electrical Characterization	Measured : Inductance	No defects
20	Flammability	Per UL-94	Not Applicable
21	Board Flex	Epoxy-PCB(1.6mm) Deflection 2mm(min) 60s minimum holding time	Holding time: 5s Meet Table A after testing.
22	Terminal Strength	Per AEC-Q200-006 A force of 17.7N for 60s	No defect

8. Specification of Packaging

8.1 Appearance and Dimensions of plastic tape

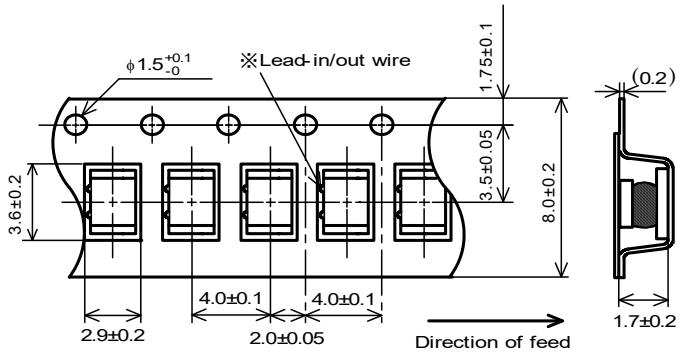

Dimension of the Cavity is measured at the bottom side.

(in mm)

8.2 Specification of Taping

(1) Packing quantity (standard quantity)

2,000 pcs / reel

(2) Packing Method

Products shall be packed in the each embossed cavity of plastic tape and sealed by cover tape.

(3) Sprocket hole

The sprocket holes are to the right as the tape is pulled toward the user.

(4) Spliced point

Plastic tape and Cover tape has no spliced point.

(5) Missing components number

Missing components number within 0.1 % of the number per reel or 1 pc., whichever is greater, and are not continuous. The specified quantity per reel is kept.

8.3 Pull Strength

Embossed carrier tape	10N min.
Cover tape	5N min.

8.4 Peeling off force of cover tape

Speed of Peeling off	300mm/min
Peeling off force	0.2 to 0.7N (minimum value is typical)

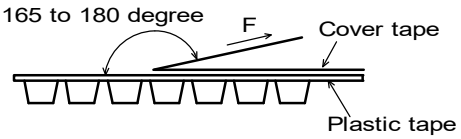

8.5 Dimensions of Leader-tape, Trailer and Reel

There shall be leader-tape (cover tape) and trailer-tape (empty tape) as follows.

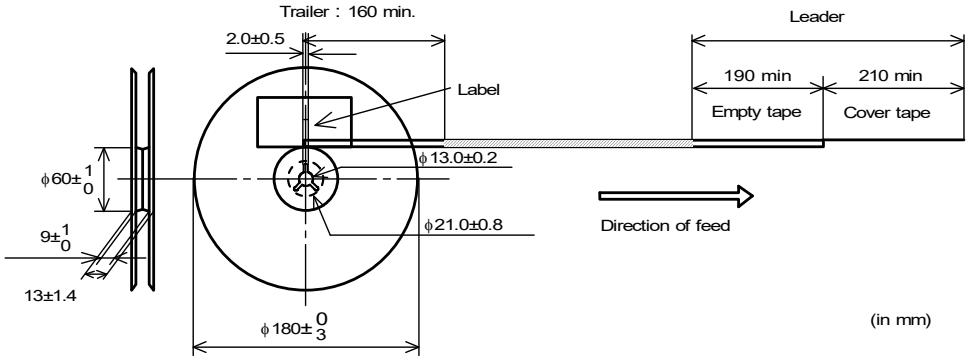

8.6 Marking for reel

Customer part number, MURATA part number, Inspection number(∗1) , RoHS marking (∗2), Quantity etc ・・・

∗1) « Expression of Inspection No. » □□ (1) OOOO (2) ××× (3)

(1) Factory Code
(2) Date First digit : Year / Last digit of year
Second digit : Month / Jan. to Sep. → 1 to 9, Oct. to Dec. → O, N, D
Third, Fourth digit : Day
(3) Serial No.

∗2) « Expression of RoHS marking » ROHS – Y (△) (1) (2)

(1) RoHS regulation conformity parts.
(2) MURATA classification number

8.7 Marking for Outside package (corrugated paper box)

Customer name, Purchasing order number, Customer part number, MURATA part number, RoHS marking (∗2) ,Quantity, etc ・・・

8.8. Specification of Outer Case

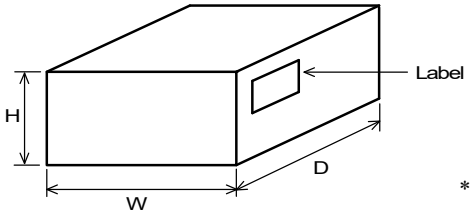

Outer Case Dimensions (mm)			Standard Reel Quantity in Outer Case (Reel)
W	D	H	
186	186	93	5

∗ Above Outer Case size is typical. It depends on a quantity of an order.

9. ⚠ Caution

9.1 Limitation of Applications

Please contact us before using our products for the applications listed below which require especially high reliability for the prevention of defects which might directly cause damage to the third party's life, body or property.

(1) Aircraft equipment
(2) Aerospace equipment
(3) Undersea equipment
(4) Power plant control equipment
(5) Medical equipment
(6) Transportation equipment (trains, ships, etc.)
(7) Traffic signal equipment
(8) Disaster prevention / crime prevention equipment
(9) Data-processing equipment
(10) Applications of similar complexity and /or reliability requirements to the applications listed in the above

9.2 Caution(Rating)

Do not exceed maximum rated current of the product. Thermal stress may be transmitted to the product and short/open circuit of the product or falling off the product may be occurred.

9.3 Fail-safe

Be sure to provide an appropriate fail-safe function on your product to prevent a second damage that may be caused by the abnormal function or the failure of our product.

10. Notice

This product is designed for solder mounting. (Reflow soldering only)
Please consult us in advance for applying other mounting method such as conductive adhesive.

10.1 Land pattern designing

Recommended land pattern for flow and reflow soldering is as follows:
It has been designed for Electric characteristics and solderability.
Please follow the recommended patterns. Otherwise, their performance which includes electrical performance or solderability may be affected, or result to "position shift" in soldering process.

(Reflow)

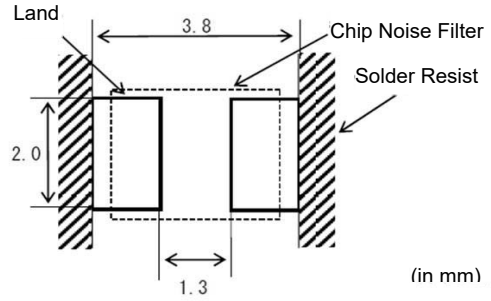

(Flow)

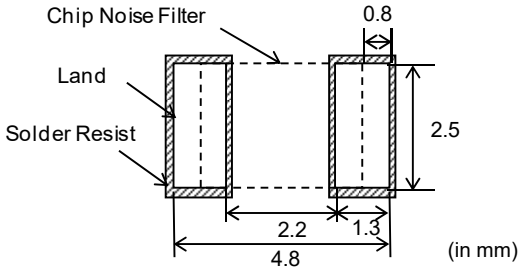

(Distance between the products for Flow)

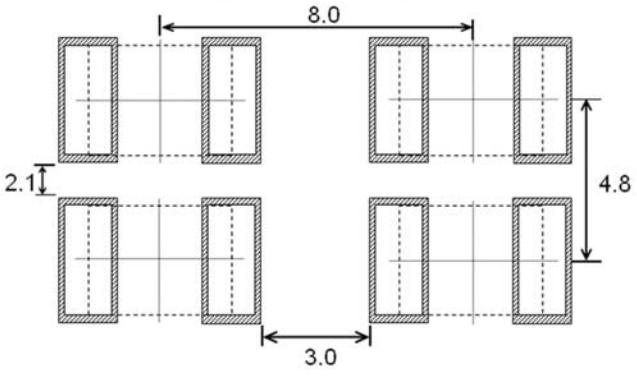

(in mm)

10.2 Flux, Solder

Flux	・Use rosin-based flux. ・Don't use highly acidic flux with halide content exceeding 0.2(wt)% (chlorine conversion value). ・Don't use water-soluble flux.
Solder	・Use Sn-3.0Ag-0.5Cu solder ・Standard thickness of solder paste : 100 μm to 150 μm

Other flux (except above) Please contact us for details, then use.

10.3 Flow soldering conditions / Reflow soldering conditions

- Pre-heating should be in such a way that the temperature difference between solder and product surface is limited to 100°C max. Cooling into solvent after soldering also should be in such a way that the temperature difference is limited to 100°C max.
  Insufficient pre-heating may cause cracks on the product, resulting in the deterioration of product quality.
- Standard soldering profile and the limit soldering profile is as follows.
  The excessive limit soldering conditions may cause leaching of the electrode and / or resulting in the deterioration of product quality.

(1)Flow soldering profile

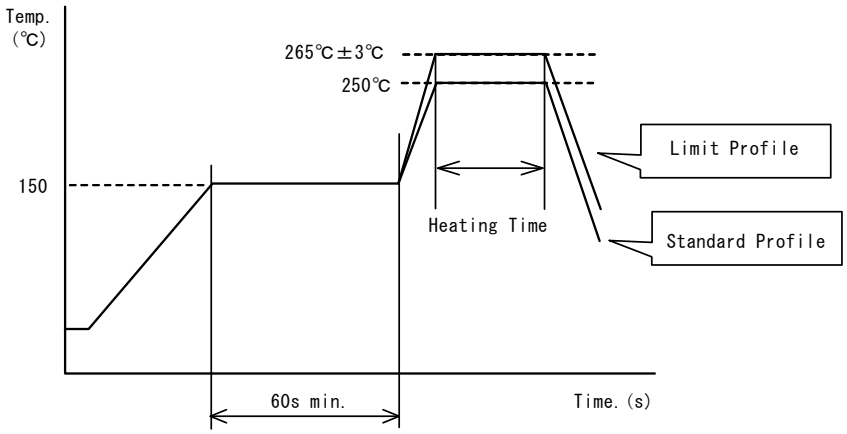

	Standard Profile	Limit Profile
Pre-heating	150℃、60s min.	
Heating	250℃、4s～6s	265℃±3℃、5s
Cycle of flow	2 times	1 time

(2)Reflow soldering profile

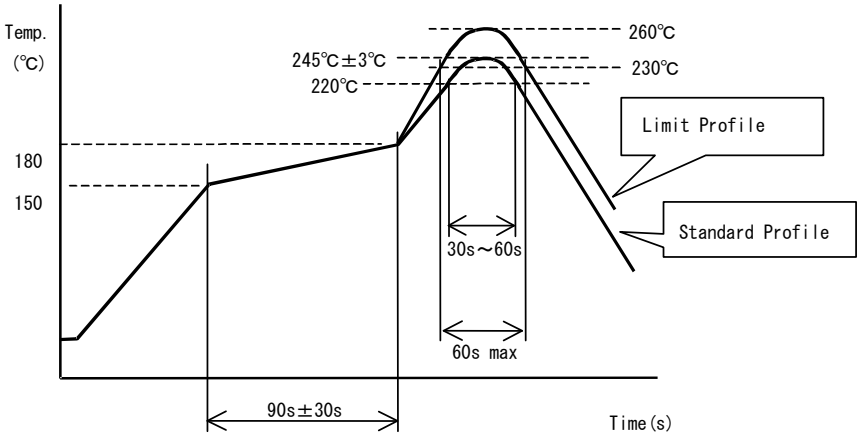

	Standard Profile	Limit Profile
Pre-heating	150～180°C 、90s±30s	
Heating	above 220°C、30s～60s	above 230°C、60s max.
Peak temperature	245±3°C	260°C,10s
Cycle of reflow	2 times	2 times

10.4 Reworking with soldering iron.

The following conditions must be strictly followed when using a soldering iron.

Pre-heating	150°C,1 min
Tip temperature	350°C max.
Soldering iron output	80W max.
Tip diameter	ϕ3mm max.
Soldering time	3 (+1,-0)s
Times	2 times

Note :Do not directly touch the products with the tip of the soldering iron in order to prevent the crack on the products due to the thermal shock.

10.5 Solder Volume

- Solder shall be used not to be exceeded the upper limits as shown below.
- Accordingly increasing the solder volume, the mechanical stress to Chip is also increased. Exceeding solder volume may cause the failure of mechanical or electrical performance.

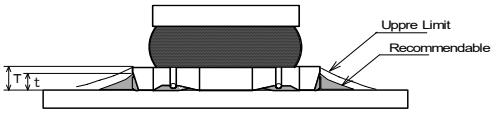

1/3T≦ t ≦T
(T: Lower flange thickness)

10.6 Product's location

The following shall be considered when designing and laying out P.C.B.'s.

(1) P.C.B. shall be designed so that products are not subject to the mechanical stress due to warping the board.

[Products direction]

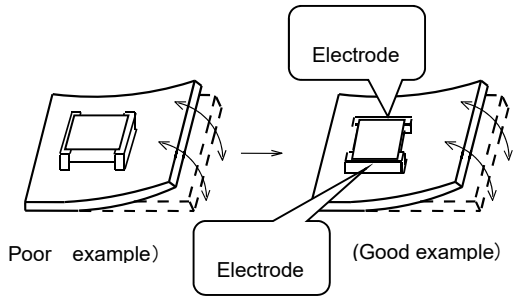

Products shall be located in the sideways direction (Length:a<b) to the mechanical stress.

(2) Components location on P.C.B. separation.

It is effective to implement the following measures, to reduce stress in separating the board. It is best to implement all of the following three measures; however, implement as many measures as possible to reduce stress.

Contents of Measures	Stress Level
(1) Turn the mounting direction of the component parallel to the board separation surface.	A > D *1
(2) Add slits in the board separation part.	A > B
(3) Keep the mounting position of the component away from the board separation surface.	A > C

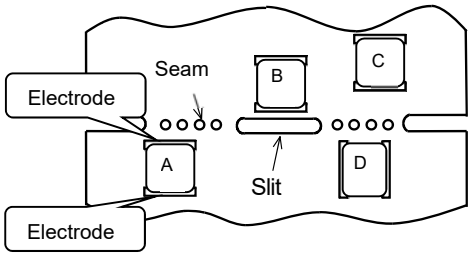

*1 A > D is valid when stress is added vertically to the perforation as with Hand Separation. If a Cutting Disc is used, stress will be diagonal to the PCB, therefore A > D is invalid.

(3) Mounting Components Near Screw Holes

When a component is mounted near a screw hole, it may be affected by the board deflection that occurs during the tightening of the screw. Mount the component in a position as far away from the screw holes as possible.

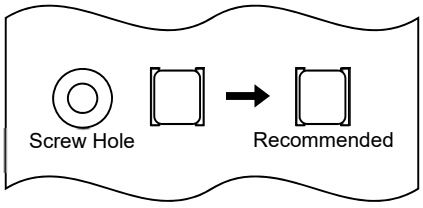

10.7 Cleaning Conditions

Products shall be cleaned on the following conditions.

(1) Cleaning temperature shall be limited to 60°C max.(40°C max for IPA.)

(2) Ultrasonic cleaning shall comply with the following conditions with avoiding the resonance phenomenon at the mounted products and P.C.B.

Power : 20 W / l max. Frequency : 28kHz to 40kHz Time : 5 minutes max.

(3) Cleaner

1. Alternative cleaner
   - Isopropyl alcohol (IPA)
2. Aqueous agent
   - PINE ALPHA ST-100S

(4) There shall be no residual flux and residual cleaner after cleaning.
In the case of using aqueous agent, products shall be dried completely after rinse with de-ionized water in order to remove the cleaner.

(5) Other cleaning
Please contact us.

10.8 Resin coating

The inductance value may change due to high cure-stress of resin to be used for coating/molding products. An open circuit issue may occur by mechanical stress caused by the resin, amount/cured shape of resin, or operating condition etc. Some resin contains some impurities or chloride possible to generate chlorine by hydrolysis under some operating condition may cause corrosion of wire of coil, leading to open circuit. So, please pay your careful attention when you select resin in case of coating/molding the products with the resin.Prior to use the coating resin, please make sure no reliability issue is observed by evaluating products mounted on your board.

10.9 Temperature rating of the circuit board and components located around

Temperature may rise up to max. 40°C when applying the rated current to the Products.
Be careful of the temperature rating of the circuit board and components located around.

10.10 Caution for use

- Sharp material such as a pair of tweezers or other material such as bristles of cleaning brush, shall not be touched to the winding portion to prevent the breaking of wire.
- Mechanical shock should not be applied to the products mounted on the board to prevent the breaking of the core.

10.11 Handling of a substrate

After mounting products on a substrate, do not apply any stress to the product caused by bending or twisting to the substrate when cropping the substrate, inserting and removing a connector from the substrate or tightening screw to the substrate.
Excessive mechanical stress may cause cracking in the product.

Bending

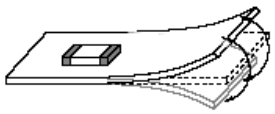

Twisting

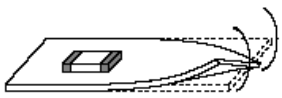

10.12 Storage and Handling Requirements

(1) Storage period
Use the products within 12 months after delivered.
Solderability should be checked if this period is exceeded.

(2) Storage conditions

- Products should be stored in the warehouse on the following conditions.
  Temperature : -10 ~ 40°C
  Humidity : 15 to 85% relative humidity No rapid change on temperature and humidity
  The electrode of the products is coated with solder. Don't keep products in corrosive gases such as sulfur, chlorine gas or acid, or it may cause oxidization of electrode, resulting in poor solderability.
- Products should not be stored on bulk packaging condition to prevent the chipping of the core and the breaking of winding wire caused by the collision between the products.
- Products should be stored on the palette for the prevention of the influence from humidity, dust and so on.
- Products should be stored in the warehouse without heat shock, vibration, direct sunlight and so on.

(3) Handling Condition
Care should be taken when transporting or handling product to avoid excessive vibration or mechanical shock.

11. ⚠ Note

(1)Please make sure that your product has been evaluated in view of your specifications with our product being mounted to your product.

(2)You are requested not to use our product deviating from the reference specifications.

(3)The contents of this reference specification are subject to change without advance notice. Please approve our product specifications or transact the approval sheet for product specifications before ordering.