Note: If you have not downloaded this document from our official website, please note that the information provided may not be the most current.
Please download the latest datasheet of NFZ5BBW970LZ10# from the official website of Murata

http://www.murata.com/en/products/productdetail?partno=NFZ5BBW970LZ10%23

NFZ5BBW970LZ10#

"#"at the end indicates the package specification code.

In Production | AEC-Q200 | RoHS | REACH

< List of part numbers with package codes >

NFZ5BBW970LZ10K NFZ5BBW970LZ10L

Applications

Unsuitable Applications	Please be sure to read and comply with these "Precautions for use."
Specific Applications	Automotive infotainment/comfort equipment,Consumer equipment, Medical equipment [GHTF A/B/C] except for implant & surgery & auto injector,Industrial equipment except for transportation & facility & energy equipment Please refer to Our Website and specifications, etc. for information about the performance, functions, quality, management, and safety required for the above applications, and use Products after confirming the performance and reliability of the actual Product.
Recommended Applications	Automotive infotainment/comfort equipment

Packaging Information

Packaging	Specifications	Standard Packing Quantity
K	330mm Embossed Tape	3000
L	180mm Embossed Tape	500

Appearance & Shape

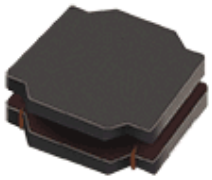

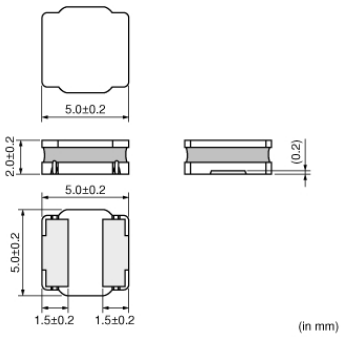

Attention
1.This datasheet is downloaded from the website of Murata Manufacturing Co., Ltd. Therefore, it's specifications are subject to change or our products in it may be discontinued without advance notice. Please check with our sales representatives or product engineers before ordering.
2.This datasheet has only typical specifications because there is no space for detailed specifications.
Therefore, please review our product specifications or consult the approval sheet for product specifications before ordering.

Note: If you have not downloaded this document from our official website, please note that the information provided may not be the most current.
Please download the latest datasheet of NFZ5BBW970LZ10# from the official website of Murata

http://www.murata.com/en/products/productdetail?partno=NFZ5BBW970LZ10%23

NFZ5BBW970LZ10#

"#"at the end indicates the package specification code.

Features

1.The NFZ series is an impedance component designed for the radiation noise ranges from 30 to 150MHz.
With high impedance generated, this product can suppress noise element connecting to noise conduction route in series.
Moreover, with wide line up corresponding to various frequency range, optimum product can be selected according to the model or set.

2. The nickel barrier structure of the external electrodes provides excellent solder heat resistance.

3. NFZ series low DC Resistance.Large Current.
The Rated Current is the maximum 4A.

4. Corresponds to 125 °C maximum use temperature.

Attention
1.This datasheet is downloaded from the website of Murata Manufacturing Co., Ltd. Therefore, it's specifications are subject to change or our products in it may be discontinued without advance notice. Please check with our sales representatives or product engineers before ordering.
2.This datasheet has only typical specifications because there is no space for detailed specifications.
Therefore, please review our product specifications or consult the approval sheet for product specifications before ordering.

Note: If you have not downloaded this document from our official website, please note that the information provided may not be the most current.
Please download the latest datasheet of NFZ5BBW970LZ10# from the official website of Murata

http://www.murata.com/en/products/productdetail?partno=NFZ5BBW970LZ10%23

NFZ5BBW970LZ10#

"#"at the end indicates the package specification code.

Specifications

Shape	SMD
Size Code (in inch)	2020
Length	5.0mm
Length Tolerance	±0.2mm
Width	5.0mm
Width Tolerance	±0.2mm
Thickness	2.0mm
Thickness Tolerance	±0.2mm
Operating Temperature Range	-40℃ to 105℃
Operating Temperature Range (Self-temperature rise is included)	-40℃ to 125℃
Mass(typ.)	0.22g
Number of Circuit	1
Rated Current (at 85℃)	1200mA
Rated Current (at 105℃)	700mA
DC Resistance(max.)	0.224Ω
DC Resistance	0.187Ω±20%
Impedance (at 1MHz)	97Ω
Impedance (at 1MHz) Tolerance	±30%
Size Code (in mm)	5050

Attention
1.This datasheet is downloaded from the website of Murata Manufacturing Co., Ltd. Therefore, it's specifications are subject to change or our products in it may be discontinued without advance notice. Please check with our sales representatives or product engineers before ordering.
2.This datasheet has only typical specifications because there is no space for detailed specifications.
Therefore, please review our product specifications or consult the approval sheet for product specifications before ordering.

Note: If you have not downloaded this document from our official website, please note that the information provided may not be the most current.
Please download the latest datasheet of NFZ5BBW970LZ10# from the official website of Murata

http://www.murata.com/en/products/productdetail?partno=NFZ5BBW970LZ10%23

NFZ5BBW970LZ10#

"#"at the end indicates the package specification code.

Product Data

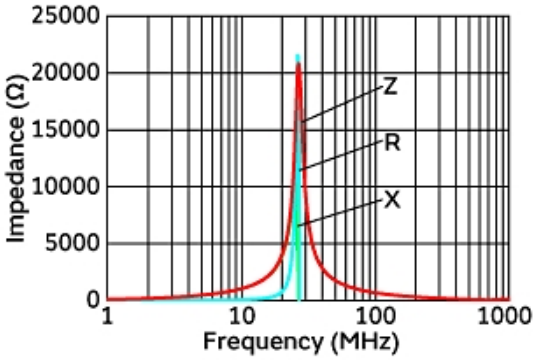

Impedance-Frequency Characteristics

In operating temperature exceeding +85°C, derating of current is necessary for NFZ5BBW_L□10 series.
Please apply the derating curve shown in chart according to the operating temperature.

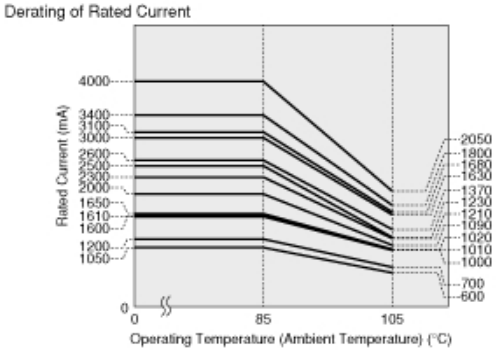

Derating of Rated Current

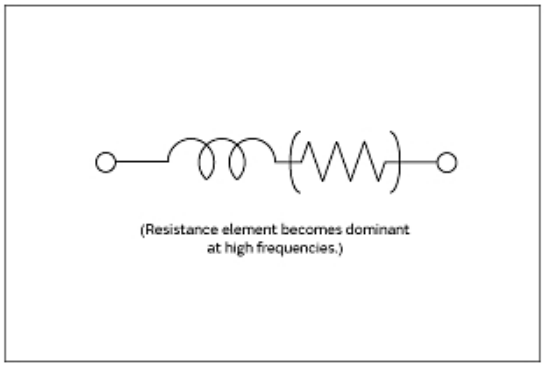

Equivalent Circuit

Attention
1.This datasheet is downloaded from the website of Murata Manufacturing Co., Ltd. Therefore, it's specifications are subject to change or our products in it may be discontinued without advance notice. Please check with our sales representatives or product engineers before ordering.
2.This datasheet has only typical specifications because there is no space for detailed specifications.
Therefore, please review our product specifications or consult the approval sheet for product specifications before ordering.