muRata
INNOVATOR IN ELECTRONICS

Discontinued

RFM products are now Murata products.

SF2039B-3

72.540 MHz SAW Filter

- ***Designed for SDARS IF Receiver***
- ***Low Insertion Loss***
- ***5.0 X 7.0 mm Surface-Mount Case***
- ***Differential or Single Ended Input and Output***
- ***Complies with Directive 2002/95/EC (RoHS)***

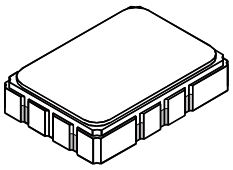

SMP-03-S

Absolute Maximum Ratings

Rating	Value	Units
Maximum Incident Power in Passband	+10	dBm
Max. DC voltage between any 2 terminals	30	VDC
Storage Temperature Range	-40 to +85	°C
Max Soldering Profile	265°C for 10 s	

Electrical Characteristics

Characteristic		Sym	Notes	Min	Typ	Max	Units
Nominal Center Frequency		f_C	1		72.540		MHz
Passband	Insertion Loss	IL			10.5	12.5	dB
	1dB Passband	BW_1	1	3.7	4.0		MHz
	15dB Bandwidth	BW_{15}			6.5	6.7	MHz
	30dB Bandwidth	BW_{30}			7.5	7.7	MHz
	Amplitude Ripple over fc ±1.85 MHz				0.5	1.3	dB_{P-P}
	Group Delay Variation over fc ±1.85 MHz	GDV			60	150	ns_{P-P}
Rejection	50 to 66.48 MHz		1, 3	40	47		dB
	66.48 to 68.08 MHz			33.5	43		
	77.30 to 78.60 MHz			38	42		
	78.60 to 86.50 MHz			40	44		
	86.50 to 91.50 MHz			45	50		
	91.50 to 100.00 MHz			45	55		
Operating Temperature Range		T_A	1	-40		+85	°C
Frequency Temperature Coefficient		FTC			-18		ppm/°C
Differential Input		175 ohms					
Differential Output		1000 ohms					
Case Style			6	SMP-03-S 5 x 7 mm Nominal Footprint			
Lid Symbolization (YY=year, WW=week, S=shift) See note 4				RFM SF2039B-3 YYWWS			

Electrical Connections

Connection	Port 1 Hot	Port 1 Ground Return or Hot	Port 2 Hot	Port 2 Ground Return or Hot	Case Ground
Terminals	10	1	5	6	All Others

CAUTION: Electrostatic Sensitive Device. Observe precautions for handling.

NOTES:

1. Unless noted otherwise, all specifications apply over the operating temperature range with filter soldered to the specified demonstration board with impedance matching to 50 Ω and measured with 50 Ω network analyzer.
2. Unless noted otherwise, all frequency specifications are referenced to the nominal center frequency, fc.
3. Rejection is measured as attenuation below the minimum IL point in the passband. Rejection in final user application is dependent on PCB layout and external impedance matching design. See Application Note No. 42 for details.
4. "LRIP" or "L" after the part number indicates "low rate initial production" and "ENG" or "E" indicates "engineering prototypes."
5. The design, manufacturing process, and specifications of this filter are subject to change.
6. Tape and Reel Standard ANSI / EIA 481.
7. Either Port 1 or Port 2 may be used for either input or output in the design. However, impedances and impedance matching may vary between Port 1 and Port 2, so that the filter must always be installed in one direction per the circuit design.
8. US and international patents may apply.
9. Murata, stylized Murata logo, and Murata N.A., Inc. are registered trademarks of Murata Manufacturing Co., Ltd.

©2010-2014 by Murata Electronics N.A., Inc.

SMP-03-S Case

12-Terminal Ceramic Surface-Mount Case
5 x 7 mm Nominal Footprint

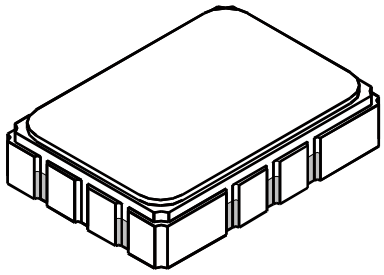

Case Dimensions						
Dimension	mm			Inches		
	Min	Nom	Max	Min	Nom	Max
A	6.80	7.00	7.20	0.268	0.276	0.283
B	4.80	5.00	5.20	0.189	0.197	0.205
C		1.65	2.00		0.065	0.079
D		0.80				
E	2.41	2.54	2.67	0.095	0.100	0.105
H	0.87	1.1	1.13	0.034	0.039	0.044
J		2.54				
K	2.87	3.00	3.13	0.113	0.118	0.123
P	1.14	1.27	1.40	0.045	0.050	0.055

Materials	
Solder Pad Termination	Au plating 30 - 60 µinches (76.2-152 µm) over 80-200 µinches (203-508 µm) Ni.
Lid	Fe-Ni-Co Alloy Electroless Nickel Plate (8-11% Phosphorus) 100-200 µinches Thick
Body	Al_2O_3 Ceramic
Pb Free	

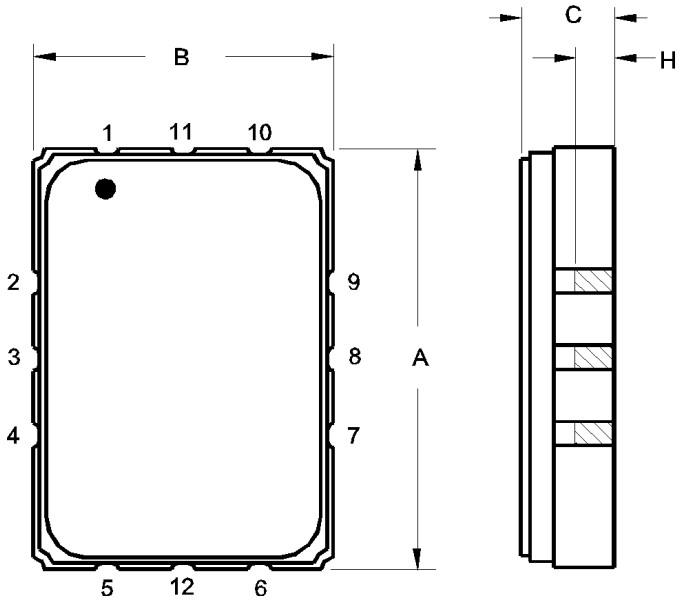

TOP VIEW

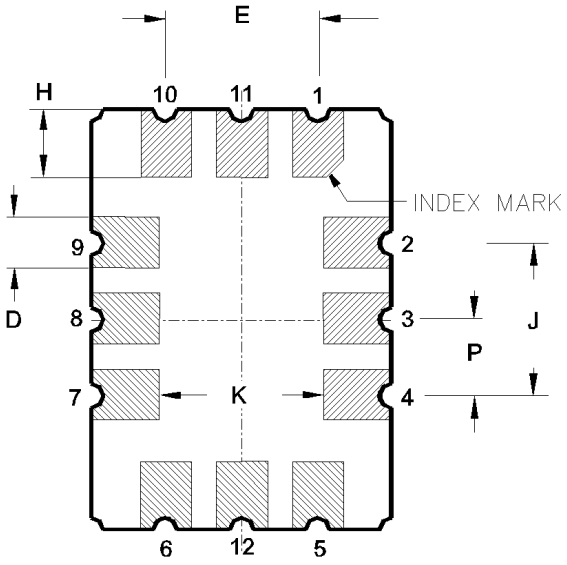

BOTTOM VIEW

©2010-2014 by Murata Electronics N.A., Inc.

COMPONENT ORIENTATION and DIMENSIONS

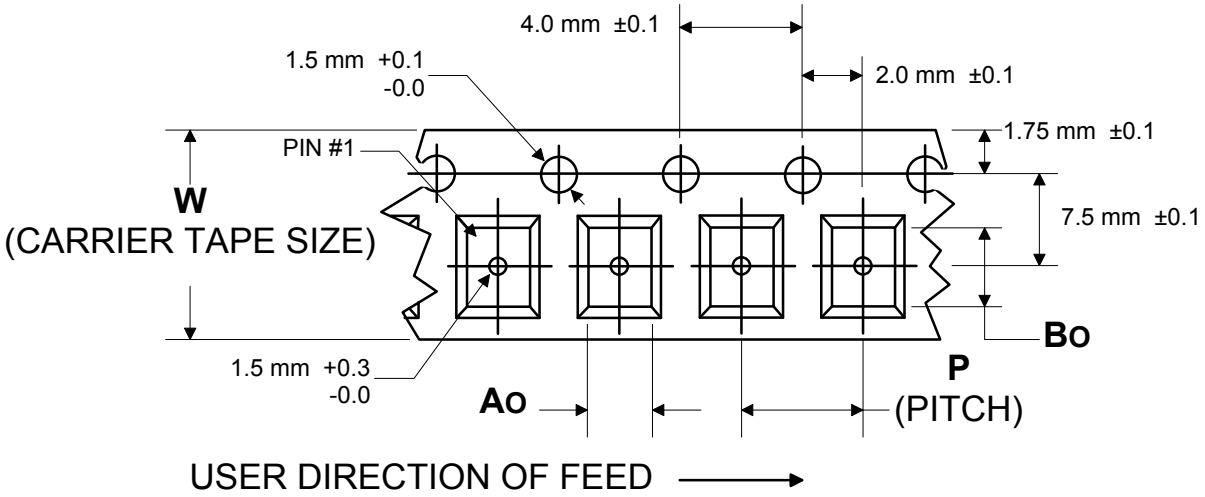

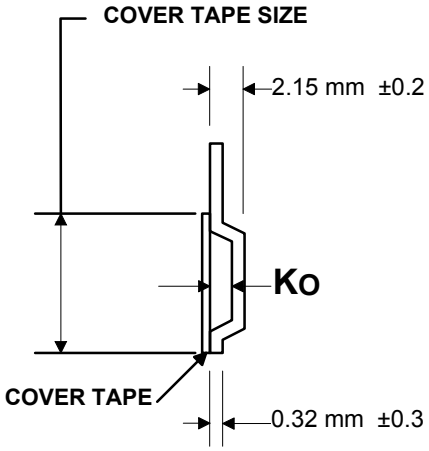

Carrier Tape Dimensions		
Ao	5.5 mm	±0.1
Bo	7.5 mm	±0.1
Ko	2.0 mm	±0.1
Pitch	8.0 mm	±0.1
W	16.0 mm	±0.3

©2010-2014 by Murata Electronics N.A., Inc.