Murata Power Solutions

HPH Series

Isolated, Low VOUT to 70A, Half-Brick DC/DC Converters

OBSOLETE PRODUCT

Last time buy: August 31, 2014.

Click Here For Obsolescence Notice of February 2014.

Murata Power Solutions' fully isolated HPH series of DC/DC converters affords users a practical solu-
rrent applications. With an input voltage range of 36 to 75 Volts, the HPH
utput current from a fully regulated 3.3V output.

Typical unit

FEATURES

- RoHS Compliant
- 3.3V to 12V outputs @ up to 70 Amps
- Input range: 36V-75V
- Open Frame: 2.3" x 2.4" x 0.40"
- Industry-standard package/pinout
- Remote sense, Trim, On/Off control
- High efficiency: up to 91%
- Fully isolated, 2250Vdc (BASIC)
- Input undervoltage shutdown
- Output overvoltage protection
- Short circuit protection, thermal shutdown
- Certified to UL/EN/IEC 60950-1, 2nd Edition, CAN/CSA-C22.2 No. 60950-1 safety approvals
- CE mark
- Optional baseplate offers increased thermal performance

nology and pla-
re manufactured
n-frame package with an industry-standard pinout.

HPH converters utilize a full-bridge, fixed-frequency topology along with synchronous output rectification to achieve a high efficiency. This efficiency, coupled with the open-frame package that allows unrestricted air flow, reduces internal component temperatures thereby allowing operation at elevated ambient temperatures.

These DC/DC's provide output trim, sense pins and primary side on/off control (available with positive or negative logic). Standard features also include input undervoltage shutdown circuitry, output overvoltage protection, output short-circuit and current limiting protection and thermal shutdown. All devices are certified to IEC/UL/EN60950-1, 2nd Edition safety standards and carry the CE mark (meet LVD requirements).

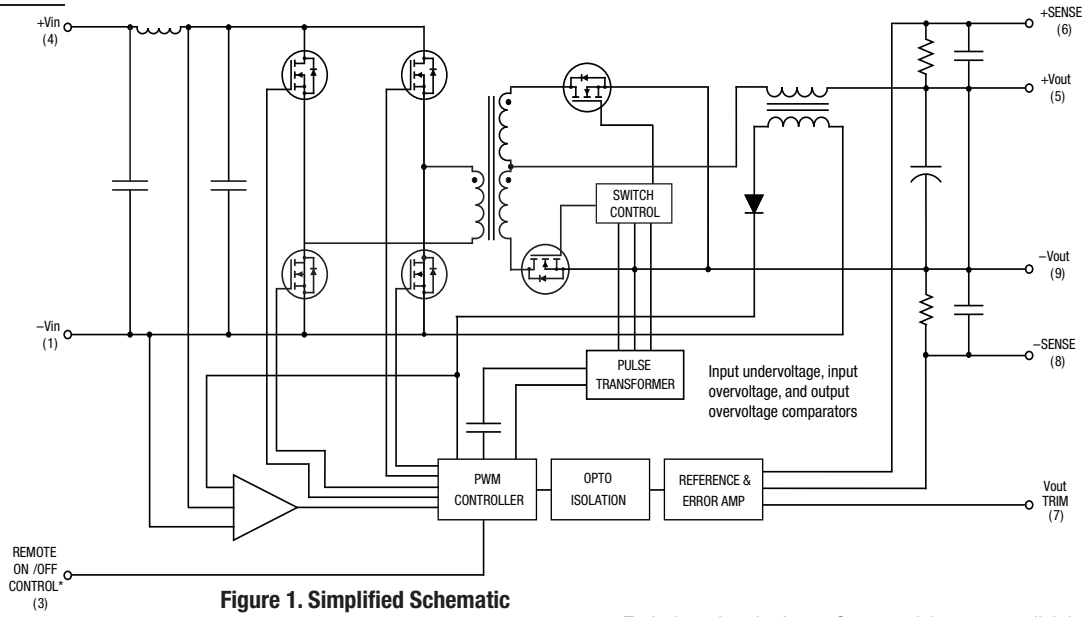

Figure 1. Simplified Schematic

Typical topology is shown. Some models may vary slightly.

* Can be ordered with positive (standard) or negative (optional) polarity.

RoHS COMPLIANT

For full details go to www.murata-ps.com/rohs

PERFORMANCE SPECIFICATIONS SUMMARY AND ORDERING GUIDE

Root Model ①	Output							Input				Efficiency		Package	
	VOUT (Volts)	IOUT (Amps, Max.)	Power (Watts)	R/N (mV pk-pk) Typ.	R/N (mV pk-pk) Max.	Regulation (Max.) Line	Regulation (Max.) Load	VIN Nom. (Volts)	Range (Volts)	IIN, no load (mA)	IIN, full load (Amps)	Min.	Typ.	(Case/ Pinout)	
HPH-3.3/70-D48N-C	3.3	70 ③	231	100	125	±0.25%	±0.25%	48	36-75	70	5.35	88%	90%	C61	P17
HPH-5/40-D48N-C	5	40	200	100	125	±0.25%	±0.25%	48	36-75	70	4.58	90%	91%	C61	P17
HPH-12/30-D48N-C	12	30	360	Please refer to the separate HPH-12/30-D48 data sheet.											

① Please refer to the full model number structure for additional ordering part numbers and options.
② All specifications are at nominal line voltage and full load, +25ºC. unless otherwise noted. See detailed specifications.
③ Full power continuous output requires baseplate installation. Please refer to the derating curves.

PART NUMBER STRUCTURE

HPH - **3.3** / **70** - **D48** **N** **B** **H** **Lx** - **C**

Unipolar
High-Power Series

Nominal Output Voltage

Maximum Output Current
in Amps

Input Voltage Range:
D48 = 36-75 Volts (48V nominal)

On/Off Control Polarity
N = Negative polarity, standard
P = Positive polarity, optional

Baseplate (optional)
Blank = No baseplate, standard
B = Baseplate installed, optional quantity order

Conformal coating (optional)
Blank = no coating, standard
H = Coating added, optional, special quantity order

Pin length option
Blank = standard pin length 0.180 in. (4.6 mm)
L1 = 0.110 in. (2.79 mm)*
L2 = 0.145 in. (3.68 mm)*

RoHS Hazardous Materials compliance
C = RoHS-6 (no lead), standard, does not claim EU exemption 7b – lead in solder
Y = RoHS-5 (with lead), optional, special quantity order

*Special quantity order is required; no sample quantities available.

Note:
Some model number combinations may not be available. Please contact Murata Power Solutions.

Note: Because of the high currents, wire the appropriate input, output and common pins in parallel. Be sure to use adequate PC board etch. If not sufficient, install additional discrete wiring.

FUNCTIONAL SPECIFICATIONS

INPUT CHARACTERISTICS

Model Family	Start-up threshold	Under-voltage Shut-down[12]	Reflected (back) Ripple Current	Input Current[1]					Internal Input Filter Type	Reverse Polarity Protection[16]	Remote On/Off Control[6]		
	Typ.			Inrush Transient	Output Short Circuit	No Load	Low Line	Standby Mode			Current (Max.)	Positive Logic	Negative Logic
	V	V	mA pk-pk	A^2sec	mA	mA	A	mA			mA	"P" model suffix	"N" model suffix
HPH-3.3/70-D48	35	33.5	20	0.1	50	70	7.13	1	Pi-type	See notes	2	OFF=Gnd. pin to +1V Max. ON=open pin or +3.5 to +13.5V Max.	OFF=open pin or +3.5V to +13.5V Max. ON=Gnd. pin to +1V Max.
HPH-5/40-D48	35	33.5	20	0.05	50	70	6.11	4			2	OFF=Gnd. pin to +1V Max. ON=open pin or +3.5 to +13.5V Max.	OFF=open pin or +3.5V to +13.5V Max. ON=Gnd. pin to +1V Max.

OUTPUT CHARACTERISTICS

Model Family	VOUT Accuracy	Adjustment Range[8]	Temperature Coefficient	Capacitance Loading	Overvoltage Protection[10,15]	Over-Voltage Protection Method	Remote Sense Compensation[11]	Minimum Loading	Ripple/ Noise[9]	Line/Load Regulation[7]	Efficiency
	50% Load	% of VNOM	% of VOUT range/ºC	Low ESR <0.02 Max., resistive load	Hiccup auto restart after fault removal		Max.		(20 MHz bandwidth)		
	% of VNOM			µF	V		% of VOUT				
HPH-3.3/70-D48	±1	±10	±0.02	10,000	4	Magnetic feedback	+10	No minimum load	See ordering guide		
HPH-5/40-D48	±1	±10	±0.02	10,000	6						

ISOLATION CHARACTERISTICS

Model Family	Input to Output	Input to baseplate	Baseplate to output	Isolation Resistance	Isolation Capacitance	Isolation Safety Rating	Current Limit Inception	Short Circuit Protection Method	Short Circuit Current
	Min.	Min.	Min.				98% of VOUT, after warmup		Continuous
	V	V	V	MΩ	pF		A		A
HPH-3.3/70-D48	2250	1500	1500	100	2000	Basic Insulation	84	Current limiting, hiccup autorestart	12
HPH-5/40-D48							45		hiccup[17]

See notes on page 5.

DYNAMIC CHARACTERISTICS		
Dynamic Load Response, µSec to ±1% final value, (50-75-50%, load step)	HPH-3.3/70-D48	150µS
	HPH-5/40-D48	200µS
Start-up Time, VIN to VOUT	HPH-3.3/70-D48, HPH-5/40-D48	10 mS
Remote On/Off to VOUT regulated (Max.)	HPH-3.3/70-D48, HPH-5/40-D48	10 mS
Switching Frequency	HPH-3.3/70-D48	450 KHz
	HPH-5/40-D48	440 KHz
Calculated MTBF		TDB
Operating Temperature Range		-40 to +85ºC, see derating curves
Storage Temperature Range		-55 to +125ºC
Thermal Protection/Shutdown		120ºC
Relative Humidity		To +85ºC/85%, non condensing
Pre-biased Startup		VOUT must be ≤ VSET

PHYSICAL CHARACTERISTICS	
Outline Dimensions	See mechanical specs
Baseplate Material	Aluminum
Pin Material	Copper alloy
Pin Diameter	0.04/0.08" (1.016/2.032mm)
Pin Finish	Nickel underplate with gold overplate
Weight	2 ounces (56.7g)
Electromagnetic Interference (conducted and radiated) (may require external filter)	Class B, EN55022/CISPR22
Safety	Certified to UL/cUL 60950-1, CSA-C22.2 No.60950-1, IEC/EN 60950-1, 2nd Edition

ABSOLUTE MAXIMUM RATINGS		
Input Voltage	Volts, Min.	-0.3V
	Volts, Max. Continuous	75V continuous
On/Off Control, referred to -VIN	Volts, Min.	-0.3V
	Volts, Max.	+15V
Input Reverse Polarity Protection		See fuse section
Output Overvoltage, Max.		VOUT + 20%
Storage Temperature	Min.	-55ºC
	Max.	125ºC

SPECIFICATION NOTES

[1] All specifications are typical unless noted. Ambient temperature = +25 degrees Celsius, Vin is nominal (+48 Volts), output current is maximum rated nominal. Output capacitance is 1 µF ceramic paralleled with 10 µF electrolytic. Input caps are 22 µF except HPH-3.3/70-D48 which is 100 µF input. All caps are low ESR. These capacitors are necessary for our test equipment and may not be needed in your application.

Testing must be kept short enough that the converter does not appreciably heat up during testing. For extended testing, use plenty of airflow. See Derating Curves for temperature performance. All models are stable and regulate within spec without external cacacitance.

[2] Input Ripple Current is tested and specified over a 5-20 MHz bandwidth and uses a special set of external filters only for the Ripple Current specifications. Input filtering is Cin = 33 µF, Cbus = 220 µF, Lbus = 12 µH except HPH-3.3/70-D48 is Cin = 100µF. Use capacitor rated voltages which are twice the maximum expected voltage. Capacitors must accept high speed AC switching currents.

[3] Note that Maximum Current Derating Curves indicate an average current at nominal input voltage. At higher temperatures and/or lower airflow, the converter will tolerate brief full current outputs if the total RMS current over time does not exceed the Derating curve.

[4] Mean Time Before Failure (MTBF) is calculated using the Telcordia (Belcore) SR-332 Method 1, Case 3, ground fixed conditions. TPCBOARD = +25 °C., full output load, natural air convection.

[5] The output may be shorted to ground indefinitely with no damage.

6] The On/Off Control is normally driven from a switch or relay. An open collector/open drain transistor may be used in saturation and cut-off (pinch-off) modes. External logic may also be used if voltage levels are fully compliant to the specifications.

[7] Regulation specifications describe the deviation as the input line voltage or output load current is varied from a nominal midpoint value to either extreme.

[8] Do not exceed maximum power ratings, Sense limits or output overvoltage when adjusting output trim values.

[9] At zero output current, Vout may contain components which slightly exceed the ripple and noise specifications.

[10] Output overload protection is non-latching. When the output overload is removed, the output will automatically recover.

[11] Because of the high currents, wire the appropriate input, output and common pins in parallel groups. Be sure to use adequate PC board etch. If not sufficient, install additional discrete wiring. If wiring is not sufficient, the Sense feedback may attempt to drive the outputs beyond ratings.

[12] The converter will shut off if the input falls below the undervoltage threshold. It will not restart until the input exceeds the Input Start Up Voltage.

[13] Please refer to the separate output capacitive load application note from Murata Power Solutions.

[14] Output noise may be further reduced by installing an external filter. See the Application Notes.

[15] To avoid damage or unplanned shutdown, avoid sinking reverse output current.

[16] To protect against accidental input voltage polarity reversal, install a fuse in series with +Vin. See Fusing information.

[17] HPH-5/40-D48 full current hiccup is approximately 3% duty cycle, 0.8 Hz pulse rate.

TYPICAL PERFORMANCE DATA

Transient Response – Model HPH-3.3/70-D48

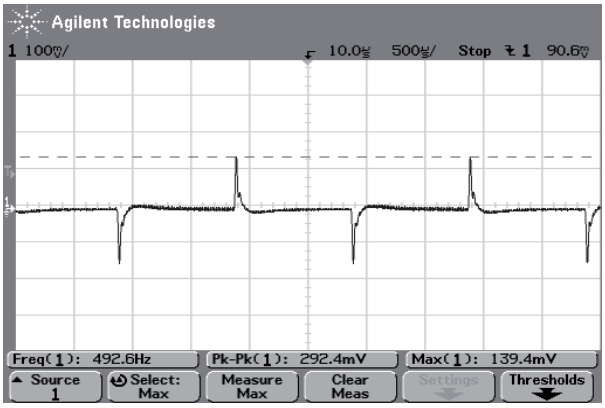

Transient Response (25% Load Step)

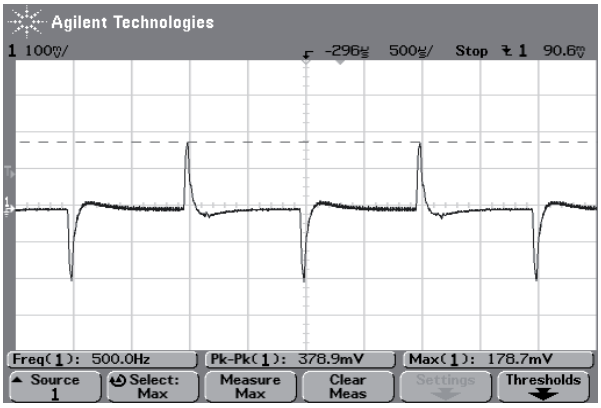

Transient Response (50% Load Step)

Enable Start-up – Model HPH-3.3/70-D48

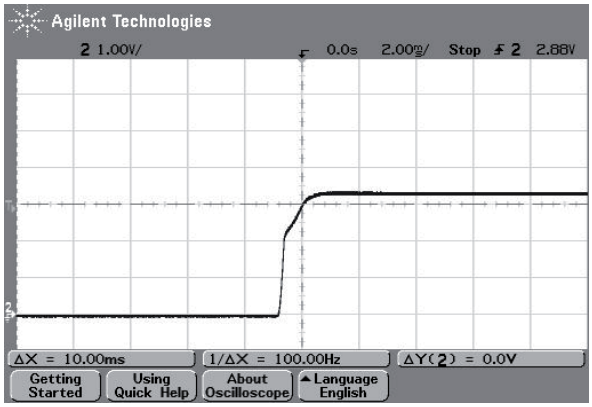

Enable Start-up (VIN=48V IOUT=0A)

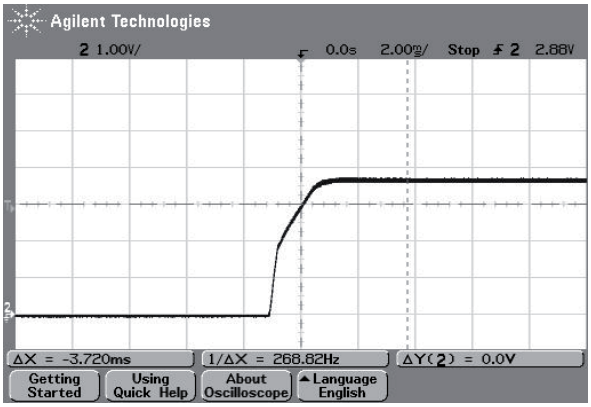

Enable Start-up (VIN=48V IOUT=70A)

Ripple and Noise (1uF Ceramic plus 10uF Tantalum) – Model HPH-3.3/70-D48

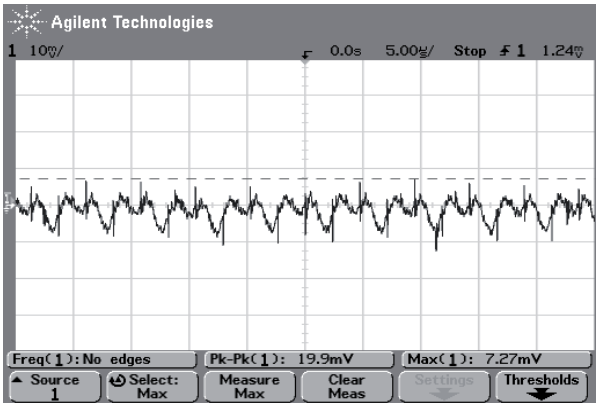

Ripple Waveform (VIN=48V IOUT=0A)

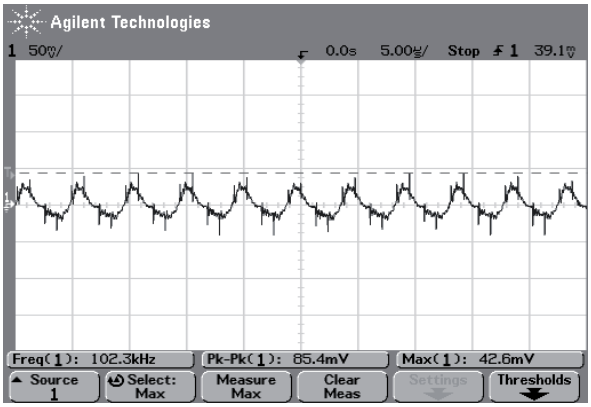

Ripple Waveform (VIN=48V IOUT=70A)

TYPICAL PERFORMANCE DATA

HPH-3.3/70-D48
Efficiency and Power Dissipation Vs. Load Current @ +25ºC

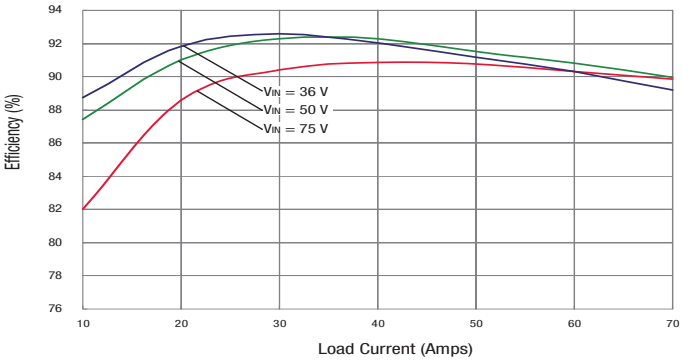

HPH-3.3/70-D48 Maximum Current Temperature Derating
(VIN=48V, Airflow is from VIN to VOUT, no baseplate)

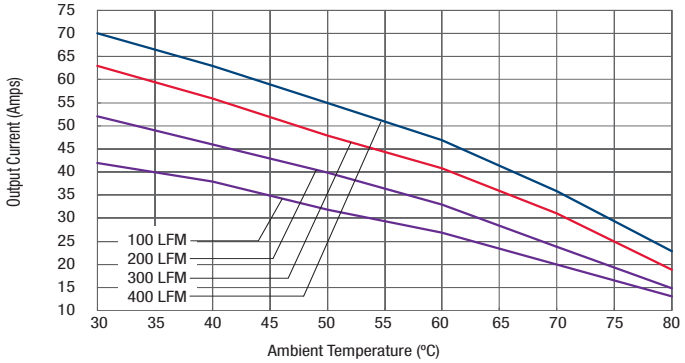

HPH-3.3/70-D48 Maximum Current Temperature Derating
(VIN=48V, Airflow is from VIN to VOUT, with baseplate)

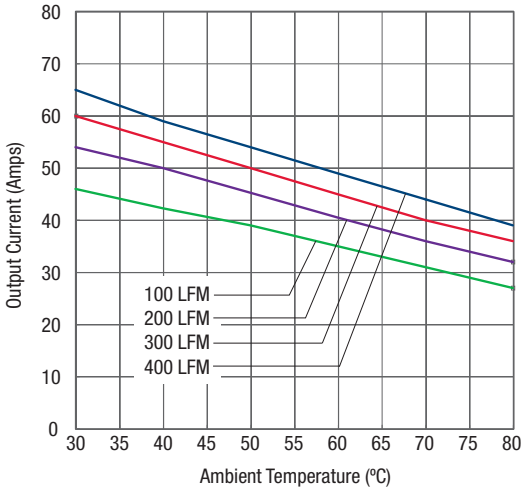

HPH-5/40-D48
Efficiency and Power Dissipation Vs. Load Current @ +25ºC

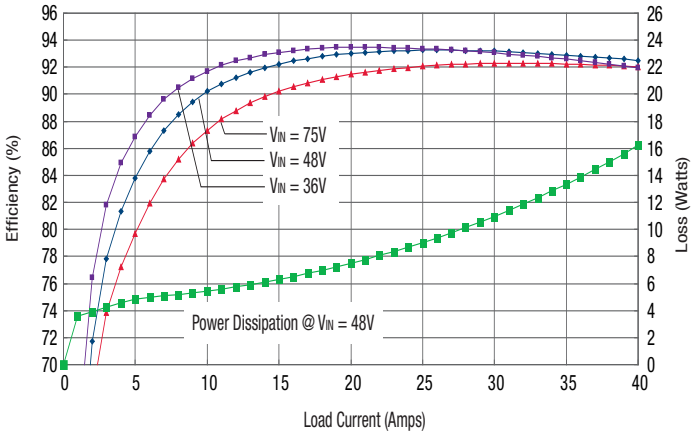

HPH-5/40-D48 Maximum Current Temperature Derating
(VIN=48V, Airflow is from VIN to VOUT, no baseplate)

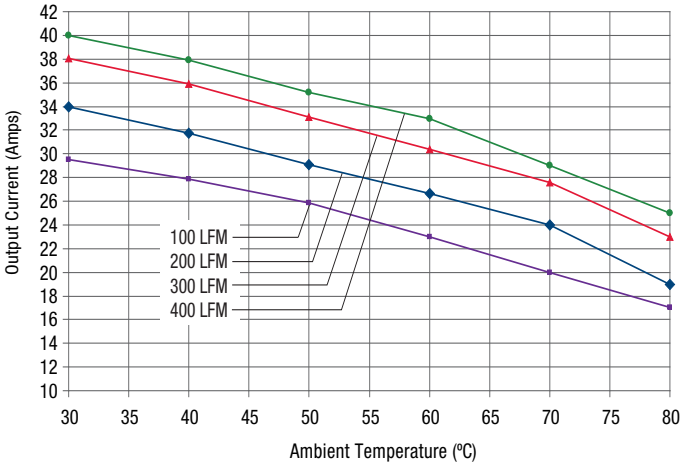

TYPICAL PERFORMANCE DATA

HPH-12/30-D48

Efficiency and Power Dissipation Vs. Line Voltage and Load Current @ +25ºC

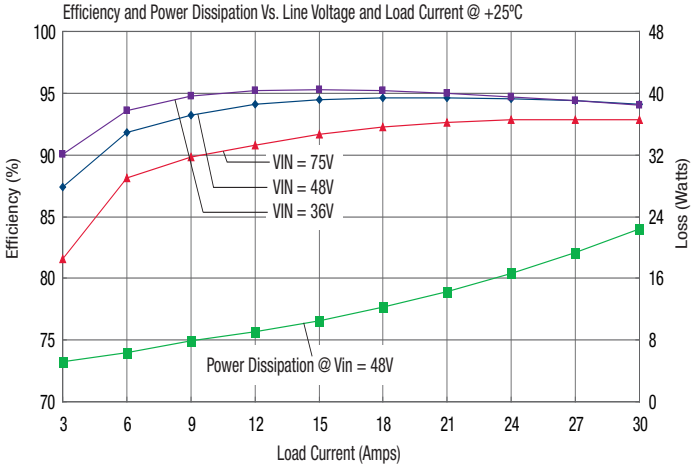

HPH-12/30-D48 Maximum Current Temperature Derating at Sea Level

(Vin = 48V, Airflow is from input to output, baseplate is installed)

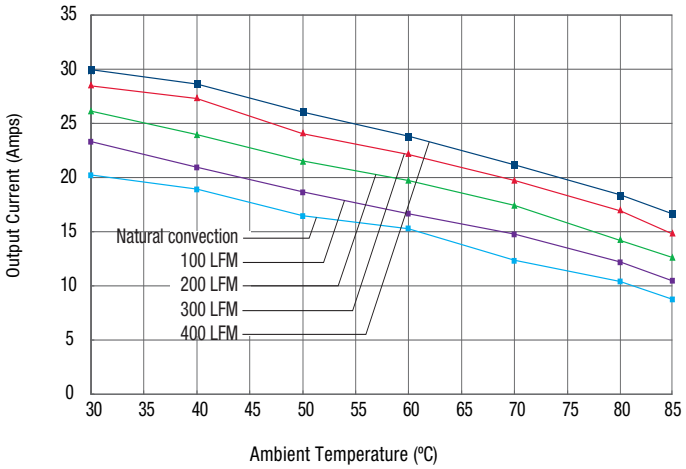

MECHANICAL SPECIFICATIONS

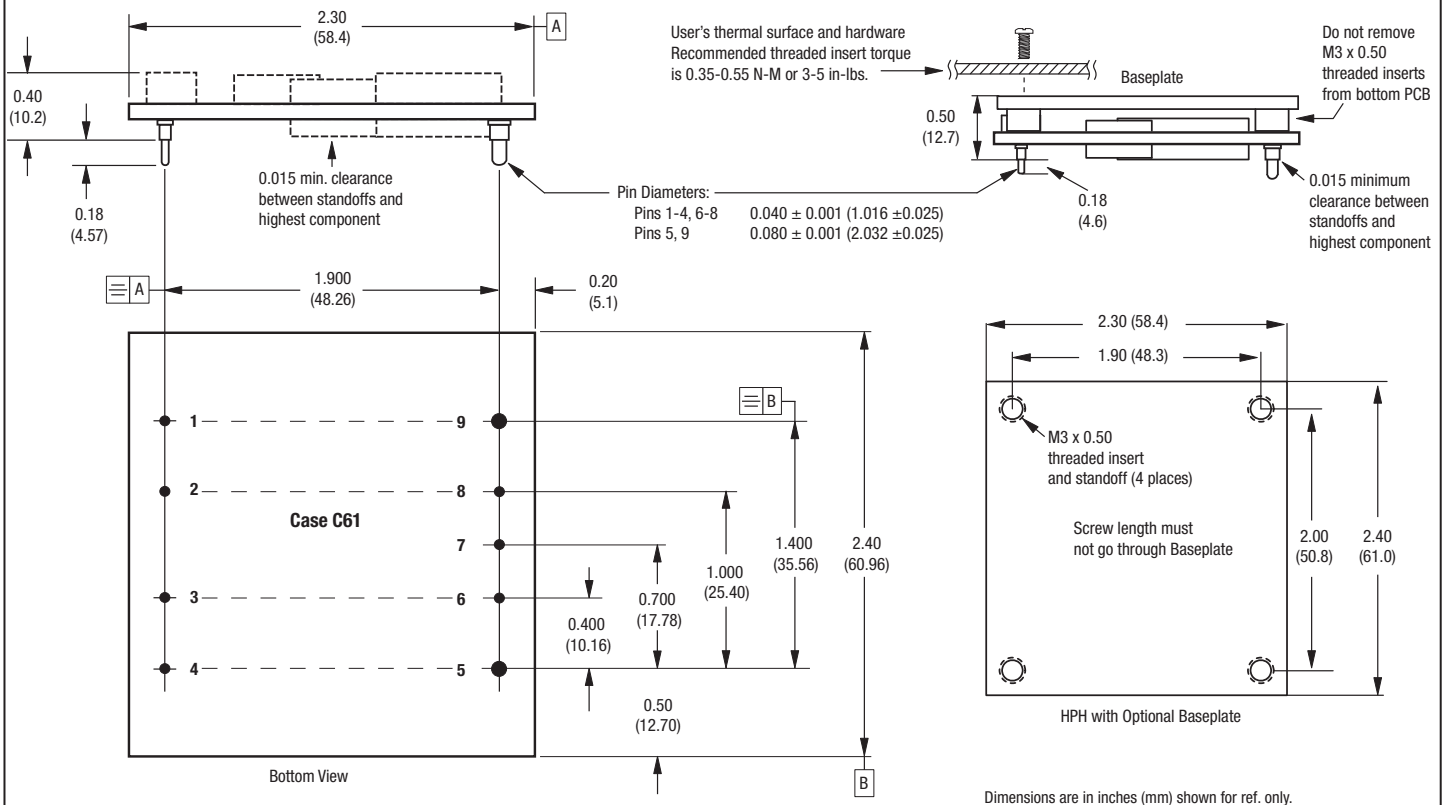

Dimensions are in inches (mm) shown for ref. only.

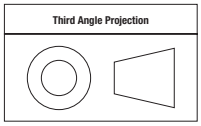

Tolerances (unless otherwise specified):
.XX ± 0.02 (0.5)
.XXX ± 0.010 (0.25)
Angles ± 2°

Components are shown for reference only.

INPUT/OUTPUT CONNECTIONS	
Pin	**Function P17**
1	Negative Input
2	Case*
3	On/Off Control
4	Positive Input
5	Positive Output
6	Positive Sense
7	Trim
8	Negative Sense
9	Negative Output

Pin 2 may be removed under special order.
Please contact Murata Power Solutions.

Since there is some pin numbering inconsistency between manufacturers of half brick converters, be sure to follow the pin function, not the pin number, when laying out your board.

Standard pin length is shown. Please refer to the Part Number Structure for special order pin lengths.

* Note that the "case" connects to the baseplate (when installed). This case connection is isolated from the rest of the converter. Pin 2 may be deleted under special order. Please contact Murata Power Solutions for information.

The Trim connection may be left open and the converter will achieve its rated output voltage.

TECHNICAL NOTES

Input Fusing

Certain applications and/or safety agencies may require fuses at the inputs of power conversion components. Fuses should also be used when there is the possibility of sustained input voltage reversal which is not current-limited. For greatest safety, we recommend a fast blow fuse installed in the ungrounded input supply line.

The installer must observe all relevant safety standards and regulations. For safety agency approvals, install the converter in compliance with the end-user safety standard.

Input Reverse-Polarity Protection

If the input voltage polarity is reversed, an internal diode will become forward biased and likely draw excessive current from the power source. If this source is not current-limited or the circuit appropriately fused, it could cause permanent damage to the converter.

Input Under-Voltage Shutdown and Start-Up Threshold

Under normal start-up conditions, converters will not begin to regulate properly until the ramping-up input voltage exceeds and remains at the Start-Up Threshold Voltage (see Specifications). Once operating, converters will not turn off until the input voltage drops below the Under-Voltage Shutdown Limit. Subsequent restart will not occur until the input voltage rises again above the Start-Up Threshold. This built-in hysteresis prevents any unstable on/off operation at a single input voltage.

Users should be aware however of input sources near the Under-Voltage Shutdown whose voltage decays as input current is consumed (such as capacitor inputs), the converter shuts off and then restarts as the external capacitor recharges. Such situations could oscillate. To prevent this, make sure the operating input voltage is well above the UV Shutdown voltage AT ALL TIMES.

Start-Up Time

Assuming that the output current is set at the rated maximum, the Vin to Vout Start-Up Time (see Specifications) is the time interval between the point when the ramping input voltage crosses the Start-Up Threshold and the fully loaded regulated output voltage enters and remains within its specified accuracy band. Actual measured times will vary with input source impedance, external input capacitance, input voltage slew rate and final value of the input voltage as it appears at the converter.

These converters include a soft start circuit to moderate the duty cycle of its PWM controller at power up, thereby limiting the input inrush current.

The On/Off Remote Control interval from On command to Vout regulated assumes that the converter already has its input voltage stabilized above the Start-Up Threshold before the On command. The interval is measured from the On command until the output enters and remains within its specified accuracy band. The specification assumes that the output is fully loaded at maximum rated current. Similar conditions apply to the On to Vout regulated specification such as external load capacitance and soft start circuitry.

Input Source Impedance

These converters will operate to specifications without external components, assuming that the source voltage has very low impedance and reasonable input voltage regulation. Since real-world voltage sources have finite impedance, performance is improved by adding external filter components. Sometimes only a small ceramic capacitor is sufficient. Since it is difficult to totally characterize all applications, some experimentation may be needed. Note that external input capacitors must accept high speed switching currents.

Because of the switching nature of DC/DC converters, the input of these converters must be driven from a source with both low AC impedance and adequate DC input regulation. Performance will degrade with increasing input inductance. Excessive input inductance may inhibit operation. The DC input regulation specifies that the input voltage, once operating, must never degrade below the Shut-Down Threshold under all load conditions. Be sure to use adequate trace sizes and mount components close to the converter.

I/O Filtering, Input Ripple Current and Output Noise

All models in this converter series are tested and specified for input reflected ripple current and output noise using designated external input/output components, circuits and layout as shown in the figures below. External input capacitors (Cin in the figure) serve primarily as energy storage elements, minimizing line voltage variations caused by transient IR drops in the input conductors. Users should select input capacitors for bulk capacitance (at appropriate frequencies), low ESR and high RMS ripple current ratings. In the figure below, the Cbus and Lbus components simulate a typical DC voltage bus. Your specific system configuration may require additional considerations. Please note that the values of Cin, Lbus and Cbus will vary according to the specific converter model.

In critical applications, output ripple and noise (also referred to as periodic and

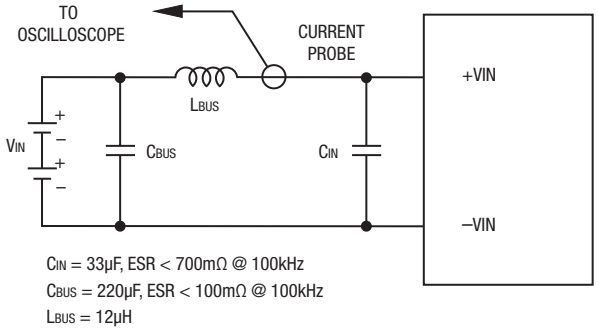

Figure 2. Measuring Input Ripple Current

random deviations or PARD) may be reduced by adding filter elements such as multiple external capacitors. Be sure to calculate component temperature rise from reflected AC current dissipated inside capacitor ESR. Our Application Engineers can recommend potential solutions.

In figure 3, the two copper strips simulate real-world printed circuit impedances between the power supply and its load. In order to minimize circuit errors and standardize tests between units, scope measurements should be made using BNC connectors or the probe ground should not exceed one half inch and soldered directly to the fixture.

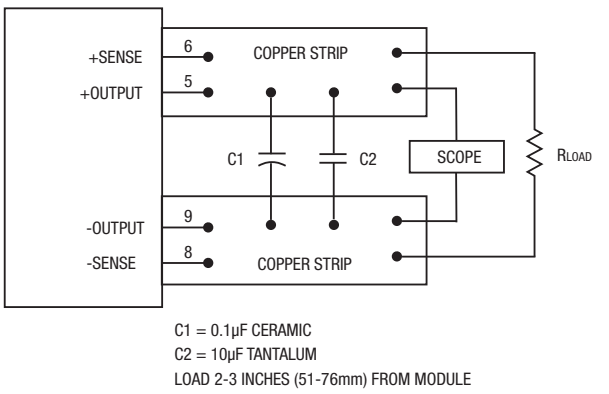

Figure 3. Measuring Output Ripple and Noise (PARD)

Floating Outputs

Since these are isolated DC/DC converters, their outputs are "floating" with respect to their input. The essential feature of such isolation is ideal ZERO CURRENT FLOW between input and output. Real-world converters however do exhibit tiny leakage currents between input and output (see Specifications). These leakages consist of both an AC stray capacitance coupling component and a DC leakage resistance. When using the isolation feature, do not allow the isolation voltage to exceed specifications. Otherwise the converter may be damaged. Designers will normally use the negative output (-Output) as the ground return of the load circuit. You can however use the positive output (+Output) as the ground return to effectively reverse the output polarity.

Minimum Output Loading Requirements

These converters employ a synchronous rectifier design topology. All models regulate within specification and are stable under no load to full load conditions. Operation under no load might however slightly increase output ripple and noise.

Thermal Shutdown

To prevent many over temperature problems and damage, these converters include thermal shutdown circuitry. If environmental conditions cause the temperature of the DC/DC's to rise above the Operating Temperature Range up to the shutdown temperature, an on-board electronic temperature sensor will power down the unit. When the temperature decreases below the turn-on threshold, the converter will automatically restart. There is a small amount of hysteresis to prevent rapid on/off cycling. The temperature sensor is typically located adjacent to the switching controller, approximately in the center of the unit. See the Performance and Functional Specifications.

CAUTION: If you operate too close to the thermal limits, the converter may shut down suddenly without warning. Be sure to thoroughly test your application to avoid unplanned thermal shutdown.

Temperature Derating Curves

The graphs in this data sheet illustrate typical operation under a variety of conditions. The Derating curves show the maximum continuous ambient air temperature and decreasing maximum output current which is acceptable under increasing forced airflow measured in Linear Feet per Minute ("LFM"). Note that these are AVERAGE measurements. The converter will accept brief increases in temperature and/or current or reduced airflow as long as the average is not exceeded.

Note that the temperatures are of the ambient airflow, not the converter itself which is obviously running at higher temperature than the outside air. Also note that very low flow rates (below about 25 LFM) are similar to "natural convection", that is, not using fan-forced airflow.

MPS makes Characterization measurements in a closed cycle wind tunnel with calibrated airflow. We use both thermocouples and an infrared camera system to observe thermal performance. As a practical matter, it is quite difficult to insert an anemometer to precisely measure airflow in most applications. Sometimes it is possible to estimate the effective airflow if you thoroughly understand the enclosure geometry, entry/exit orifice areas and the fan flowrate specifications. If in doubt, contact MPS to discuss placement and measurement techniques of suggested temperature sensors.

CAUTION: If you routinely or accidentally exceed these Derating guidelines, the converter may have an unplanned Over Temperature shut down. Also, these graphs are all collected at slightly above Sea Level altitude. Be sure to reduce the derating for higher density altitude.

Output Overvoltage Protection

This converter monitors its output voltage for an over-voltage condition using an on-board electronic comparator. The signal is optically coupled to the primary side PWM controller. If the output exceeds OVP limits, the sensing circuit will power down the unit, and the output voltage will decrease. After a time-out period, the PWM will automatically attempt to restart, causing the output voltage to ramp up to its rated value. It is not necessary to power down and reset the converter for this automatic OVP-recovery restart.

If the fault condition persists and the output voltage climbs to excessive levels, the OVP circuitry will initiate another shutdown cycle. This on/off cycling is referred to as "hiccup" mode. It safely tests full current rated output voltage without damaging the converter.

Output Fusing

The converter is extensively protected against current, voltage and temperature extremes. However your output application circuit may need additional protection. In the extremely unlikely event of output circuit failure, excessive voltage could be applied to your circuit. Consider using an appropriate fuse in series with the output.

Output Current Limiting

As soon as the output current increases to approximately 125% to 150% of its maximum rated value, the DC/DC converter will enter a current-limiting mode. The output voltage will decrease proportionally with increases in output current, thereby maintaining a somewhat constant power output. This is commonly referred to as power limiting.

Current limiting inception is defined as the point at which full power falls below the rated tolerance. See the Performance/Functional Specifications. Note particularly that the output current may briefly rise above its rated value. This enhances reliability and continued operation of your application. If the output current is too high, the converter will enter the short circuit condition.

Output Short Circuit Condition

When a converter is in current-limit mode, the output voltage will drop as the output current demand increases. If the output voltage drops too low, the magnetically coupled voltage used to develop primary side voltages will also drop, thereby shutting down the PWM controller. Following a time-out period,

the PWM will restart, causing the output voltage to begin ramping up to its appropriate value. If the short-circuit condition persists, another shutdown cycle will initiate. This on/off cycling is called "hiccup mode". The hiccup cycling reduces the average output current, thereby preventing excessive internal temperatures. A short circuit can be tolerated indefinitely.

Remote Sense Input

Sense inputs compensate for output voltage inaccuracy delivered at the load. This is done by correcting voltage drops along the output wiring such as moderate IR drops and the current carrying capacity of PC board etch. Sense inputs also improve the stability of the converter and load system by optimizing the control loop phase margin.

Note: The Sense input and power Vout lines are internally connected through low value resistors to their respective polarities so that the converter can operate without external connection to the Sense. Nevertheless, if the Sense function is not used for remote regulation, the user should connect +Sense to +Vout and –Sense to –Vout at the converter pins.

The remote Sense lines carry very little current. They are also capacitively coupled to the output lines and therefore are in the feedback control loop to regulate and stabilize the output. As such, they are not low impedance inputs and must be treated with care in PC board layouts. Sense lines on the PCB should run adjacent to DC signals, preferably Ground. In cables and discrete wiring, use twisted pair, shielded tubing or similar techniques

Please observe Sense inputs tolerance to avoid improper operation:

[Vout(+) –Vout(-)] – [Sense(+) – Sense(-)] ≤ 10% of Vout

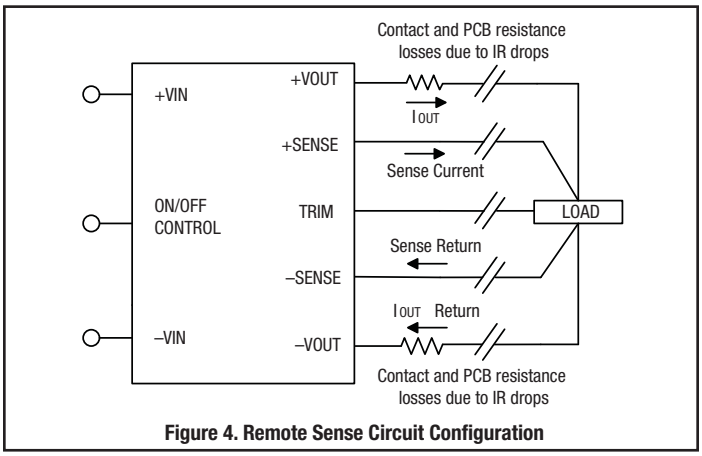

Figure 4. Remote Sense Circuit Configuration

Output overvoltage protection is monitored at the output voltage pin, not the Sense pin. Therefore excessive voltage differences between Vout and Sense together with trim adjustment of the output can cause the overvoltage protection circuit to activate and shut down the output.

Power derating of the converter is based on the combination of maximum output current and the highest output voltage. Therefore the designer must insure:

(Vout at pins) x (Iout) ≤ (Max. rated output power)

Trimming the Output Voltage

The Trim input to the converter allows the user to adjust the output voltage over the rated trim range (please refer to the Specifications). In the trim equations and circuit diagrams that follow, trim adjustments use either a trimpot or a single fixed resistor connected between the Trim input and either the +Sense or –Sense terminals. (On some converters, an external user-supplied precision DC voltage may also be used for trimming). Trimming resistors should have a low temperature coefficient (±100 ppm/deg.C or less) and be mounted close to the converter. Keep leads short. If the trim function is not used, leave the trim unconnected. With no trim, the converter will exhibit its specified output voltage accuracy.

There are two CAUTIONs to be aware for the Trim input:

CAUTION: To avoid unplanned power down cycles, do not exceed EITHER the maximum output voltage OR the maximum output power when setting the trim. Be particularly careful with a trimpot. If the output voltage is excessive, the OVP circuit may inadvertantly shut down the converter. If the maximum power is exceeded, the converter may enter current limiting. If the power is exceeded for an extended period, the converter may overheat and encounter overtemperature shut down.

CAUTION: Be careful of external electrical noise. The Trim input is a senstive input to the converter's feedback control loop. Excessive electrical noise may cause instability or oscillation. Keep external connections short to the Trim input. Use shielding if needed. Also consider adding a small value ceramic capacitor between the Trim and –Vout to bypass RF and electrical noise.

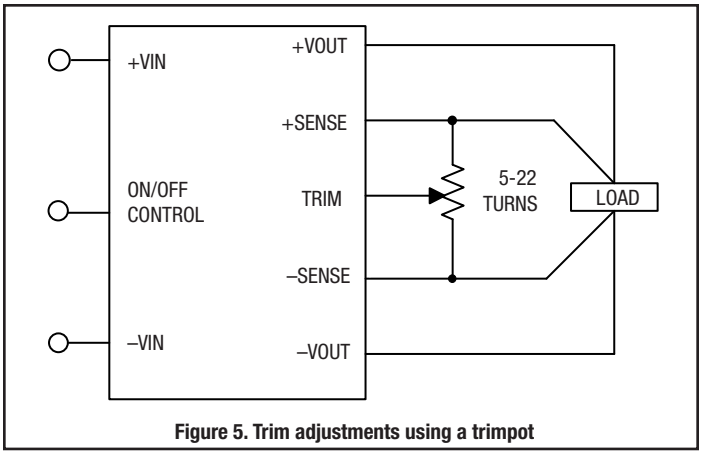

Figure 5. Trim adjustments using a trimpot

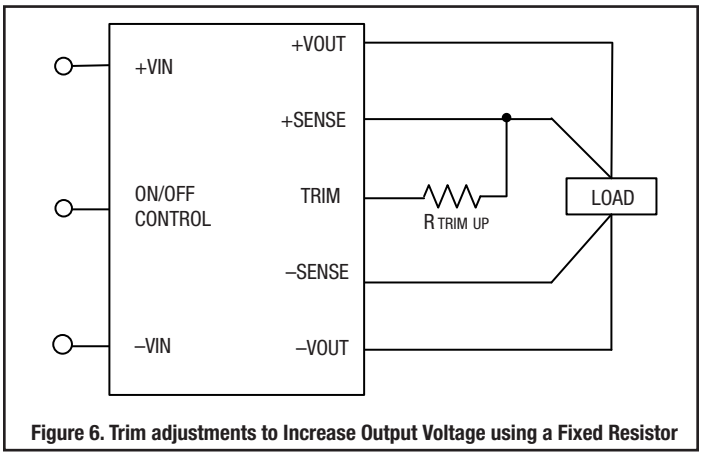

Figure 6. Trim adjustments to Increase Output Voltage using a Fixed Resistor

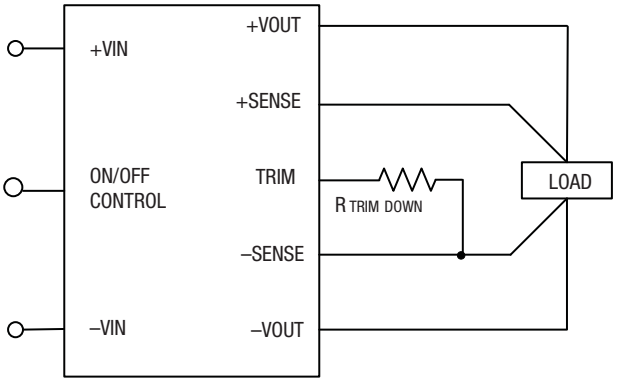

Figure 7. Trim adjustments to Decrease Output Voltage using a Fixed Resistor

$$R_{adj_up}\,(\text{in k}\Omega) = \frac{V_{nominal} \times (1+\Delta)}{1.225 \times \Delta} - \frac{1}{\Delta} - 2$$

$$\text{where } \Delta = \frac{V_{out} - V_{nominal}}{V_{nominal}}$$

$$R_{adj_down}\,(\text{in k}\Omega) = \frac{1}{\Delta} - 2$$

$$\text{where } \Delta = \frac{V_{nominal} - V_{out}}{V_{nominal}}$$

Trim Equations

Where Vref = +1.225 Volts and Δ is the desired output voltage change. Note that "Δ" is given as a small fraction, not a percentage.

A single resistor connected between Trim and +Sense will increase the output voltage. A resistor connected between Trim and –Sense will decrease the output.

Remote On/Off Control

On the input side, a remote On/Off Control can be ordered with either polarity.

Positive: Standard models are enabled when the On/Off pin is left open or is pulled high to +Vin with respect to –Vin. An internal bias current causes the open pin to rise to +Vin. Some models will also turn on at lower intermediate voltages (see Specifications). Positive-polarity devices are disabled when the On/Off is grounded or brought to within a low voltage (see Specifications) with respect to –Vin.

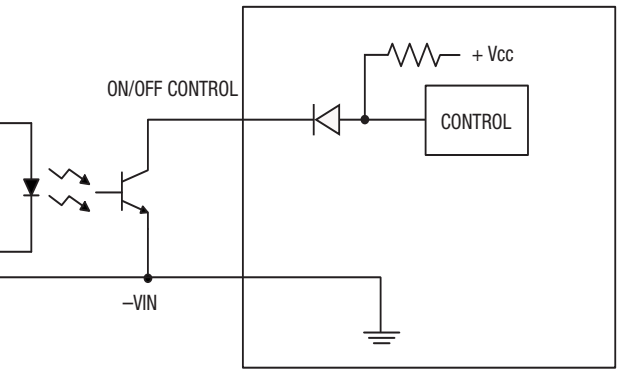

Figure 8. Driving the Positive Polarity On/Off Control Pin

Negative: Optional negative-polarity devices are on (enabled) when the On/Off is grounded or brought to within a low voltage (see Specifications) with respect to –Vin. The device is off (disabled) when the On/Off is pulled high to +Vin with respect to –Vin.

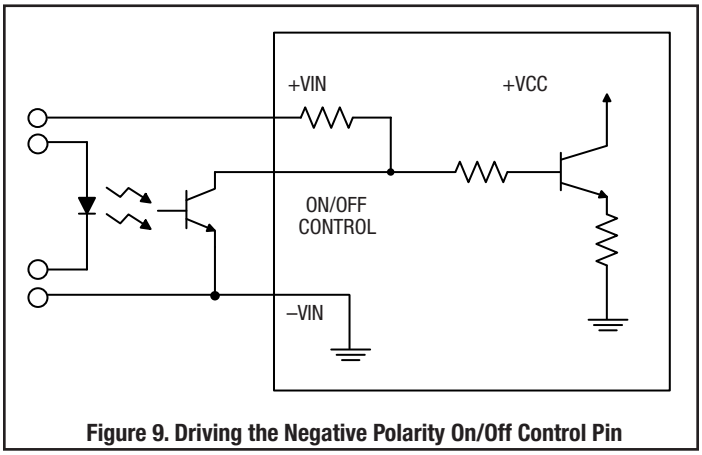

Figure 9. Driving the Negative Polarity On/Off Control Pin

Dynamic control of the On/Off function should be able to sink appropriate signal current when brought low and withstand appropriate voltage when brought high. Be aware too that there is a finite time in milliseconds (see Specifications) between the time of On/Off Control activation and stable, regulated output. This time will vary slightly with output load type and current and input conditions.

There are two CAUTIONs for the On/Off Control:

CAUTION: While it is possible to control the On/Off with external logic if you carefully observe the voltage levels, the preferred circuit is either an open drain/open collector transistor or a relay (which can thereupon be controlled by logic).

CAUTION: Do not apply voltages to the On/Off pin when there is no input power voltage. Otherwise the converter may be permanently damaged.

NOTICE—Please use only this customer data sheet as product documentation when laying out your printed circuit boards and applying this product into your application. Do NOT use other materials as official documentation such as advertisements, product announcements, or website graphics.

We strive to have all technical data in this customer data sheet highly accurate and complete. This customer data sheet is revision-controlled and dated. The latest customer data sheet revision is normally on our website (www.murata-ps.com) for products which are fully released to Manufacturing. Please be especially careful using any data sheets labeled "Preliminary" since data may change without notice.

The pinout (Pxx) and case (Cxx) designations refer to a generic family of closely related information. It may not be a single pinout or unique case outline. Please be aware of small details (such as Sense pins, Power Good pins, etc.) or slightly different dimensions (baseplates, heat sinks, etc.) which may affect your application and PC board layouts. Study the Mechanical Outline drawings, Input/Output Connection table and all footnotes very carefully. Please contact Murata Power Solutions if you have any questions.

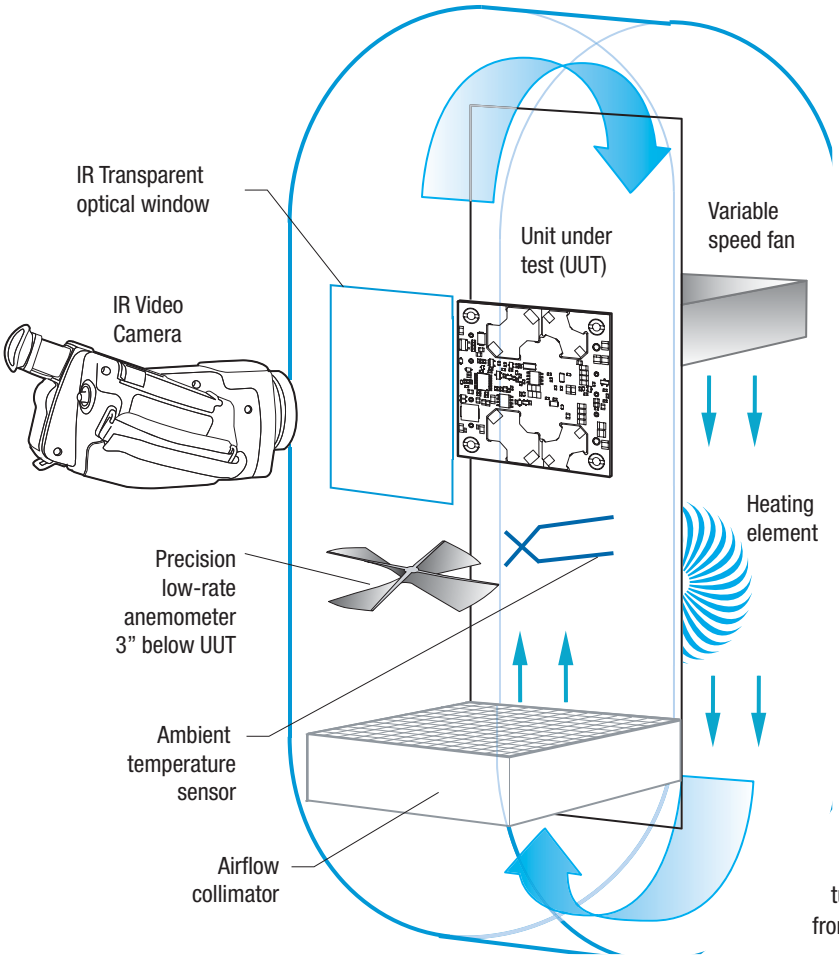

Figure 10. Vertical Wind Tunnel

Vertical Wind Tunnel

Murata Power Solutions employs a custom-designed enclosed vertical wind tunnel, infrared video camera system and test instrumentation for accurate airflow and heat dissipation analysis of power products. The system includes a precision low flow-rate anemometer, variable speed fan, power supply input and load controls, temperature gauges and adjustable heating element.

The IR camera can watch thermal characteristics of the Unit Under Test (UUT) with both dynamic loads and static steady-state conditions. A special optical port is used which is transparent to infrared wavelengths. The computer files from the IR camera can be studied for later analysis.

Both through-hole and surface mount converters are soldered down to a host carrier board for realistic heat absorption and spreading. Both longitudinal and transverse airflow studies are possible by rotation of this carrier board since there are often significant differences in the heat dissipation in the two airflow directions. The combination of both adjustable airflow, adjustable ambient heat and adjustable Input/Output currents and voltages mean that a very wide range of measurement conditions can be studied.

The airflow collimator mixes the heat from the heating element to make uniform temperature distribution. The collimator also reduces the amount of turbulence adjacent to the UUT by restoring laminar airflow. Such turbulence can change the effective heat transfer characteristics and give false readings. Excess turbulence removes more heat from some surfaces and less heat from others, possibly causing uneven overheating.

Both sides of the UUT are studied since there are different thermal gradients on each side. The adjustable heating element and fan, built-in temperature gauges and no-contact IR camera mean that power supplies are tested in real-world conditions.

Soldering Guidelines

Murata Power Solutions recommends the specifications below when installing these converters. These specifications vary depending on the solder type. Exceeding these specifications may cause damage to the product. Your production environment may differ; therefore please thoroughly review these guidelines with your process engineers.

Wave Solder Operations for through-hole mounted products (THMT)			
For Sn/Ag/Cu based solders:		**For Sn/Pb based solders:**	
Maximum Preheat Temperature	115° C.	Maximum Preheat Temperature	105° C.
Maximum Pot Temperature	270° C.	Maximum Pot Temperature	250° C.
Maximum Solder Dwell Time	7 seconds	Maximum Solder Dwell Time	6 seconds

Murata Power Solutions, Inc.
11 Cabot Boulevard, Mansfield, MA 02048-1151 U.S.A.
ISO 9001 and 14001 REGISTERED

This product is subject to the following operating requirements and the Life and Safety Critical Application Sales Policy:
Refer to: http://www.murata-ps.com/requirements/

Murata Power Solutions, Inc. makes no representation that the use of its products in the circuits described herein, or the use of other technical information contained herein, will not infringe upon existing or future patent rights. The descriptions contained herein do not imply the granting of licenses to make, use, or sell equipment constructed in accordance therewith. Specifications are subject to change without notice.
© 2014 Murata Power Solutions, Inc.