# Single Output LSN-W3 Models

Non-Isolated, 3-5.5VIN, 0.75-3.3VOUT
16 Amp DC/DC Converters

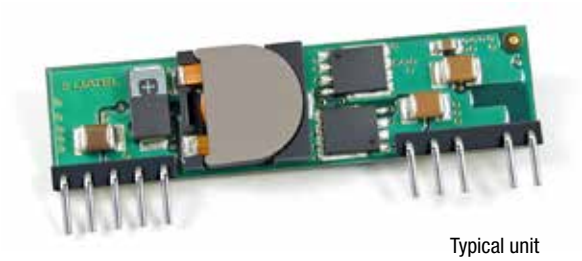

Typical unit

## FEATURES

- Step-down, wide input buck regulators for distributed 3-5V power architectures
- 3V to 5.5V wide-input range
- 0.75/1/1.2/1.5/1.8/2/2.5/3.3VOUT @16A
- Non-isolated, fixed-frequency, synchronous-rectifier topology
- ±1% setpoint accuracy
- Efficiencies to 95% @ 16 Amps
- Noise as low as 30mVp-p
- Stable no-load operation
- Remote on/off control
- Sense pin and output voltage trim
- No derating to +65°C with no fan
- UL/IEC/EN60950-1 certification pending
- EMC compliant

## PRODUCT OVERVIEW

LSN Series W3 are ideal building blocks for emerging, on-board power-distribution schemes in which isolated 3 to 5.5V buses deliver power to any number of non-isolated, step-down buck regulators. LSN W3 DC/DC's accept 3 to 5.5 Volts and convert it, with the highest efficiency in the smallest space, to a 0.75, 1, 1.2, 1.5, 1.8, 2, 2.5, or 3.3 Volt output fully rated at 16 Amps.

LSN W3's are ideal point-of-use/load power processors. They typically require no external components. Their surface-mount packages occupy a mere 1.3" x 0.53" (33.0 x 13.5mm), and are only 0.34 inches (8.6mm) high.

The LSN's best-in-class power density is achieved with a fully synchronous, fixed-frequency, buck topology that also delivers: high efficiency (97%, 3.3Vout, 8A), low noise (30mVp-p typ.), tight line/load regulation (±0.1%/±0.25% max.), quick step response (30µsec), stable no-load operation, and no output reverse conduction.

The fully functional LSN's feature output overcurrent detection, continuous short-circuit protection, over-temperature protection, a remote on/off control pin (pull low to disable), an output-voltage trim function, and a sense pin. High efficiency enables the LSN W3's to deliver rated output currents of 16 Amps at ambient temperatures to +65°C with natural convection.

If your new system boards call for multiple supply voltages, check out the economics of on-board 3-5.5V distributed power. If you don't need to pay for multiple isolation barriers, DATEL's non-isolated LSN W3 SMT's will save you money.

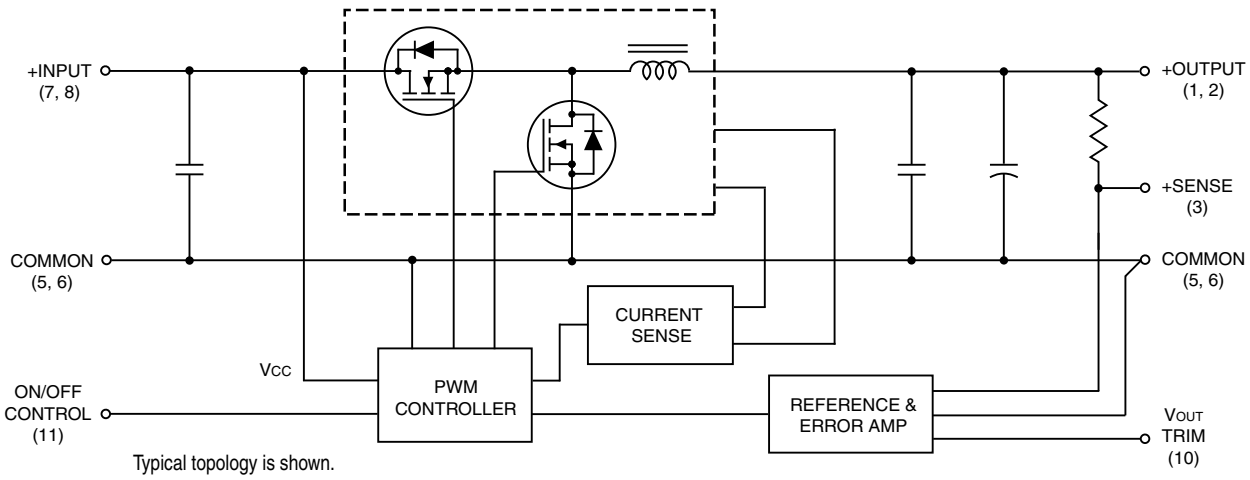


Typical topology is shown.

RoHS COMPLIANT

For full details go to
www.murata-ps.com/rohs

**Figure 1. Simplified Schematic**

# Single Output LSN-W3 Models

Non-Isolated, 3-5.5VIN, 0.75-3.3VOUT
16 Amp DC/DC Converters

## Performance Specifications and Ordering Guide ①

**ORDERING GUIDE**

| | Models | Output | | | | | | Input | | | Efficiency (Full Load) | | | Package (Case, Pinout) |
|---|---|---|---|---|---|---|---|---|---|---|---|---|---|---|
| | | VOUT (Volts) | IOUT (Amps) | R/N (mVp-p) ② Typ. | R/N (mVp-p) ② Max. | Regulation (Max.) ③ Line | Regulation (Max.) ③ Load | VIN Nom. (Volts) | Range (Volts) | IIN ④ (mA/A) | VIN = nom. Min. | VIN = nom. Typ. | VIN = min Typ. | |
| Discontinued | LSN-0.75/16-W3 | 0.75 | 16 | 30 | 50 | ±0.1% | ±0.25% | 5 | 3-5.5 | 70/2.79 | 84% | 86% | 86.5% | B8/B8x, P59 |
| Discontinued | LSN-1/16-W3 | 1 | 16 | 30 | 50 | ±0.1% | ±0.25% | 5 | 3-5.5 | 70/3.72 | 84% | 86% | 86.5% | B8/B8x, P59 |
| Discontinued | LSN-1.2/16-W3 | 1.2 | 16 | 30 | 50 | ±0.1% | ±0.25% | 5 | 3-5.5 | 70/4.36 | 86% | 88% | 88.5% | B8/B8x, P59 |
| Discontinued | LSN-1.5/16-W3 | 1.5 | 16 | 30 | 50 | ±0.1% | ±0.25% | 5 | 3-5.5 | 70/5.33 | 88% | 90% | 90.5% | B8/B8x, P59 |
| Discontinued | LSN-1.8/16-W3 | 1.8 | 16 | 30 | 50 | ±0.1% | ±0.25% | 5 | 3-5.5 | 70/6.30 | 89.5% | 91.5% | 92% | B8/B8x, P59 |
| Discontinued | LSN-2/16-W3 | 2 | 16 | 30 | 50 | ±0.1% | ±0.25% | 5 | 3-5.5 | 70/6.92 | 90.5% | 92.5% | 92.5% | B8/B8x, P59 |
| Discontinued | LSN-2.5/16-W3 | 2.5 | 16 | 30 | 50 | ±0.1% | ±0.25% | 5 | 3-5.5 | 70/8.56 | 91.5% | 93.5% | 94% | B8/B8x, P59 |
| Discontinued | LSN-3.3/16-W3 | 3.3 | 16 | 30 | 50 | ±0.1% | ±0.25% | 5 | 3-5.5⑤ | 50/11.12 | 93% | 95% | 95% | B8/B8x, P59 |
| Discontinued | LSN-T/16-W3 | 0.75-3.3 | 16 | 30 | 50 | ±0.05% | ±0.15% | 5 | 3-5.5⑤ | 50/11.12 | 93% | 95% | 95% | B8/B8x, P59 |
| | LSN-T/16-W3HHL2-Y | 0.75-3.3 | 16 | 30 | 50 | ±0.05% | ±0.15% | 5 | 3-5.5⑤ | 50/11.12 | 93% | 95% | 95% | B8/B8x, P59 |
| | LSN-T/16-W3HHL2-C-HW | 0.75-3.3 | 16 | 30 | 50 | ±0.05% | ±0.15% | 5 | 3-5.5⑤ | 50/11.12 | 93% | 95% | 95% | B8/B8x, P59 |

① Typical at TA = +25°C under nominal line voltage and full-load conditions, unless noted. All models are tested/specified with external 22µF tantalum input and output capacitors. These capacitors are necessary to accommodate our test equipment and may not be required to achieve specified performance in your applications. See I/O Filtering and Noise Reduction.

② Ripple/Noise (R/N) is tested/specified over a 20MHz bandwidth and may be reduced with external filtering. See I/O Filtering and Noise Reduction for details.

③ These devices have no minimum-load requirements and will regulate under no-load conditions. Regulation specifications describe the output-voltage deviation as the line voltage or load is varied from its nominal/midpoint value to either extreme.

④ Nominal line voltage, no-load/full-load conditions.

⑤ VIN = 4.5 Volts minimum for VOUT = 3.3 Volts.

⑥ Unless noted, LSN-T/16-W3 specifications are at 3.3VOUT.

**PART NUMBER STRUCTURE**

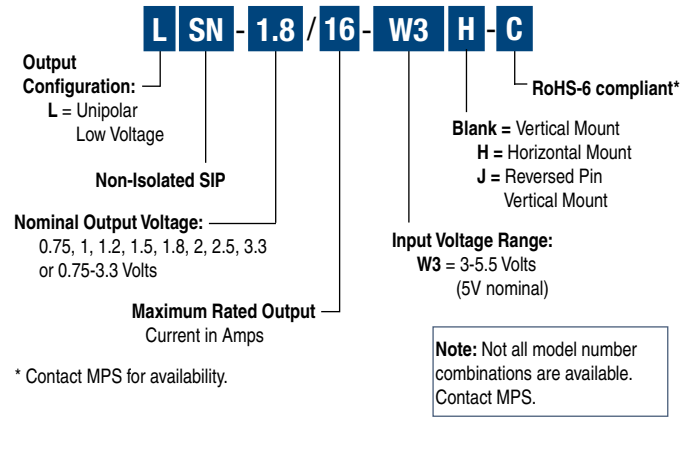


* Contact MPS for availability.

**Note:** Not all model number combinations are available. Contact MPS.

## Performance/Functional Specifications

Typical @ TA = +25°C under nominal line voltage and full-load conditions unless noted. ①

| | |
|---|---|
| **Input** | |
| **Input Voltage Range** | 3-5.5 Volts (5V nominal) ⑧ |
| **Input Current:** | |
| Normal Operating Conditions | See Ordering Guide |
| Inrush Transient | 0.02A² sec |
| Standby/Off Mode | 8mA |
| Output Short-Circuit Condition ② | 60-110mA average (model dependent) |
| **Input Reflected Ripple Current** ② ⑥ | 10-20mAp-p, model dependent |
| **Input Filter Type** | Capacitive |
| **Overvoltage Protection** | None |
| **Reverse-Polarity Protection** | None. Install external fuse. |
| **Undervoltage Shutdown** | None |
| **On/Off Control** ② ③ | On = open or low (<0.4V max.)<br>Off = high (>2.5V to VIN max.), 1mA |
| **Output** | |
| **VOUT Accuracy** (50% load) | ±1.5% ⑦ |
| **Temperature Coefficient** | ±0.02%/°C |
| **Minimum Loading** ① | No load |
| **Maximum Capacitive Load** | 5000µF (electrolytic),<br>2000µF (0.02Ω ESR, OSCON) |
| **VOUT Trim Range** | ±10% |
| **Ripple/Noise** (20MHz BW) ① ② ④ | See Ordering Guide |
| **Total Accuracy** | 3% over line/load/temperature |
| **Efficiency** | See Ordering Guide |
| **Overcurrent Detection and Short-Circuit Protection:** ② | |
| Current-Limiting Detection Point | 20-36 Amps (model dependent) |
| Short-Circuit Detection Point | 98% of VOUT set |
| SC Protection Technique | Hiccup with auto recovery |
| Short-Circuit Current | 600mA average |
| **Dynamic Characteristics** | |
| **Transient Response** (50% load step) | 30-70µsec to ±2% of final value<br>(model dependent) |
| **Start-Up Time:** ② | |
| VIN to VOUT and On/Off to VOUT | 7msec |
| **Switching Frequency** | 300 ±50kHz |
| **Environmental** | |
| **Calculated MTBF** ⑤ | TBD |
| **Operating Temperature:** (Ambient) ② | |
| Without Derating (Natural convection) | –40 to +63/71°C (model dependent,<br>see Derating Curves) |
| With Derating | See Derating Curves |
| **PC-Board Temperature** | +100°C maximum |
| **Thermal Shutdown** | +115°C (110 to 125°C) |
| **Physical** | |
| **Dimensions** | See Mechanical Specifications |
| **Pin Dimensions/Material** | 0.112" x 0.062" (2.84 x 1.57mm) rectangular<br>tellurium copper alloy with 100-300<br>microinches of tin electroplate over<br>100 microinches of nickel underplate |
| **Weight** | 0.28 ounces (7.8g) |
| **Flamability Rating** | UL94V-0 |
| **EMI** | EN55022/CISPR22 (requires external filter) |
| **Safety** | UL/cUL/IEC/EN 60950-1, CSA-C22.2 No.234 |

① All models are tested/specified with external 22µF tantalum input and output capacitors. These capacitors are necessary to accommodate our test equipment and may not be required to achieve specified performance in your applications. All models are stable and regulate within spec under no-load conditions.
② See Technical Notes and Performance Curves for details.
③ The On/Off Control is designed to be driven with open-collector logic or the application of appropriate voltages (referenced to Common, pin 3). Applying a voltage to On/Off Control when no input voltage is applied to the converter may cause permanent damage.
④ Output noise may be further reduced with the installation of additional external output filtering. See I/O Filtering and Noise Reduction.
⑤ MTBF's are calculated using Telcordia SR-332(Bellcore), ground fixed, TA = +25°C, full power, natural convection, +67°C pcb temperature.
⑥ Input Ripple Current is tested/specified over a 5-20MHz bandwidth with an external 2 x 100µF input capacitor and a simulated source impedance of 1000µF and 1µH. See I/O Filtering, Input Ripple Current, and Output Noise for details.
⑦ Setting accuracy for LSN-T/16-W3 is ±2%.
⑧ Input voltage must be 4.5V minimum for 3.3V output.

| Absolute Maximum Ratings | |
|---|---|
| **Input Voltage:** | |
| Continuous or transient | 6 Volts (0.75, 1, 1.2, 1.5, 1.8, 2, 2.5 VOUT)<br>7 Volts (3.3VOUT and "T" models) |
| **On/Off Control** (Pin 1) | +VIN |
| **Input Reverse-Polarity Protection** | None. Install external fuse. |
| **Output Overvoltage Protection** | None |
| **Output Current** | Current limited. Devices can withstand sustained output short circuits without damage. |
| **Storage Temperature** | –40 to +125°C |
| **Lead Temperature** | See Reflow Solder Profile |

These are stress ratings. Exposure of devices to greater than any of these conditions may adversely affect long-term reliability. Proper operation under conditions other than those listed in the Performance/ Functional Specifications Table is not implied.

## TECHNICAL NOTES

### I/O Filtering and Noise Reduction

All models in the LSN W3 Series are tested and specified with external 22µF tantalum input and output capacitors. These capacitors are necessary to accommodate our test equipment and may not be required to achieve desired performance in your application. The LSN's are designed with high-quality, high-performance ***internal*** I/O caps, and will operate within spec in most applications with ***no additional external*** components.

In particular, the LSN's input capacitors are specified for low ESR and are fully rated to handle the units' input ripple currents. Similarly, the internal output capacitors are specified for low ESR and full-range frequency response.

In critical applications, input/output ripple/noise may be further reduced using filtering techniques, the simplest being the installation of external I/O caps.

External input capacitors serve primarily as energy-storage devices. They minimize high-frequency variations in input voltage (usually caused by IR drops in conductors leading to the DC/DC) as the switching converter draws pulses of current. Input capacitors should be selected for bulk capacitance (at appropriate frequencies), low ESR, and high rms-ripple-current ratings. The switching nature of modern DC/DC's requires that the dc input voltage source have low ac impedance at the frequencies of interest. Highly inductive source impedances can greatly affect system stability. Your specific system configuration may necessitate additional considerations.

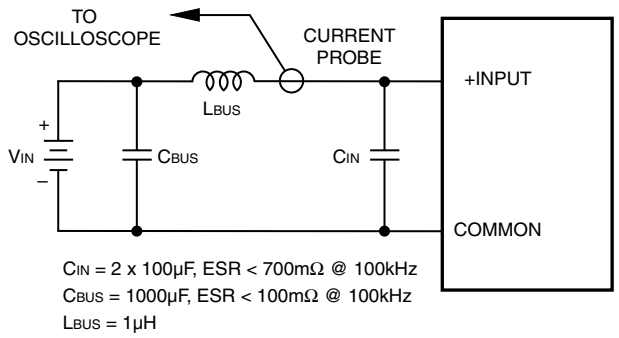


**Figure 2. Measuring Input Ripple Current**

Output ripple/noise (also referred to as periodic and random deviations or PARD) may be reduced below specified limits with the installation of additional external output capacitors. Output capacitors function as true filter elements and should be selected for bulk capacitance, low ESR, and appropriate frequency response. Any scope measurements of PARD should be made directly at the DC/DC output pins with scope probe ground less than 0.5" in length

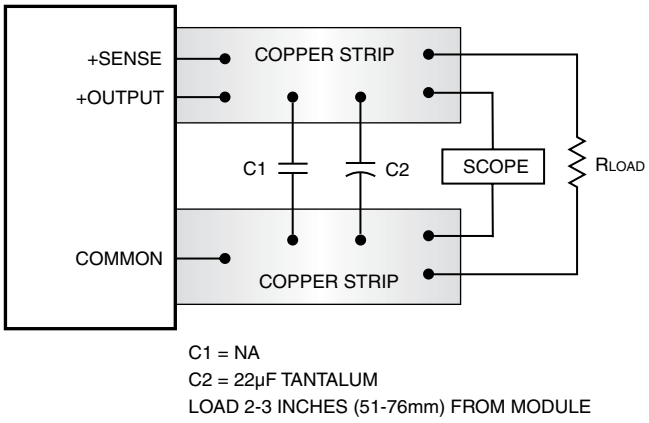


**Figure 3. Measuring Output Ripple/Noise (PARD)**

All external capacitors should have appropriate voltage ratings and be located as close to the converters as possible. Temperature variations for all relevant parameters should be taken into consideration.

You should add only enough output capacitance to attenuate the noise to your desired level. Large amounts of output capacitance cause poor dynamic response (step load changes, etc.). Too great an output capacitor can make the converter oscillate (actually increasing the noise!) while substantial capacitance which is less than the oscillation threshold can still cause ringing and overshoot. Finally, you must use less output capacitance if the cap is a low ESR type (OSCON, etc.).

The most effective combination of external I/O capacitors will be a function of your line voltage and source impedance, as well as your particular load and layout conditions. Our Applications Engineers can recommend potential solutions and discuss the possibility of our modifying a given device's internal filtering to meet your specific requirements. Contact our Applications Engineering Group for additional details.

## Input Fusing

Most applications and or safety agencies require the installation of fuses at the inputs of power conversion components. The LSN W3 Series are not internally fused. Therefore, if input fusing is mandatory, either a normal-blow or a fast-blow fuse with a value no greater than twice the maximum input current should be installed within the ungrounded input path to the converter.

As a rule of thumb however, we recommend to use a normal-blow or fast-blow fuse with a typical value of about twice the maximum input current, calculated at low line with the converter's minimum efficiency.

## Safety Considerations

LSN W3 SMT's are non-isolated DC/DC converters. In general, all DC/DC's must be installed, including considerations for I/O voltages and spacing/separation requirements, in compliance with relevant safety-agency specifications (usually UL/IEC/EN60950-1).

In particular, for a non-isolated converter's output voltage to meet SELV (safety extra low voltage) requirements, its input must be SELV compliant. If the output needs to be ELV (extra low voltage), the input must be ELV.

## Input Overvoltage and Reverse-Polarity Protection

LSN W3 SMT Series DC/DC's do not incorporate either input overvoltage or input reverse-polarity protection. Input voltages in excess of the specified absolute maximum ratings and input polarity reversals of longer than "instantaneous" duration can cause permanent damage to these devices.

## Start-Up Time

The VIN to VOUT Start-Up Time is the interval between the time at which a ramping input voltage crosses the lower limit of the specified input voltage range and the fully loaded output voltage enters and remains within its specified accuracy band. Actual measured times will vary with input source impedance, external input capacitance, and the slew rate and final value of the input voltage as it appears to the converter.

The On/Off to VOUT Start-Up Time assumes the converter is turned off via the On/Off Control with the nominal input voltage already applied to the converter. The specification defines the interval between the time at which the converter is turned on and the fully loaded output voltage enters and remains within its specified accuracy band. See Typical Performance Curves.

## Remote Sense

LSN W3 SMT Series DC/DC converters offer an output sense function on pin 3. The sense function enables point-of-use regulation for overcoming moderate IR drops in conductors and/or cabling. Since these are non-isolated devices whose inputs and outputs usually share the same ground plane, sense is provided only for the +Output.

The remote sense line is part of the feedback control loop regulating the DC/DC converter's output. The sense line carries very little current and consequently requires a minimal cross-sectional-area conductor. As such, it is not a low-impedance point and must be treated with care in layout and cabling. Sense lines should be run adjacent to signals (preferably ground), and in cable and/or discrete-wiring applications, twisted-pair or similar techniques should be used. To prevent high frequency voltage differences between VOUT and Sense, we recommend installation of a 1000pF capacitor close to the converter.

The sense function is capable of compensating for voltage drops between the +Output and +Sense pins that do not exceed 10% of VOUT.

$$[V_{OUT}(+) - Common] - [Sense(+) - Common] \leq 10\%V_{OUT}$$

Power derating (output current limiting) is based upon maximum output current and voltage at the converter's output pins. Use of trim and sense functions can cause the output voltage to increase, thereby increasing output power beyond the LSN's specified rating. Therefore:

$$(V_{OUT} \text{ at pins}) \times (I_{OUT}) \leq \text{rated output power}$$

The internal 10.5Ω resistor between +Sense and +Output (see Figure 1) serves to protect the sense function by limiting the output current flowing through the sense line if the main output is disconnected. It also prevents output voltage runaway if the sense connection is disconnected.

***Note: If the sense function is not used for remote regulation, +Sense (pin 3) must be tied to +Output (pin 4) at the DC/DC converter pins.***

## On/Off Control and Power-up Sequencing

The On/Off Control pin may be used for remote on/off operation. LSN W3 SIP Series DC/DC's are designed so they are enabled when the control pin is left open (internal pull-down to Common) and disabled when the control pin is pulled high (+2.5V to +VIN), as shown in Figures 4 and 5.

Dynamic control of the on/off function is best accomplished with a mechanical relay or open-collector/open-drain drive circuit. The drive circuit should be able to sink appropriate current when activated and withstand appropriate voltage when deactivated.

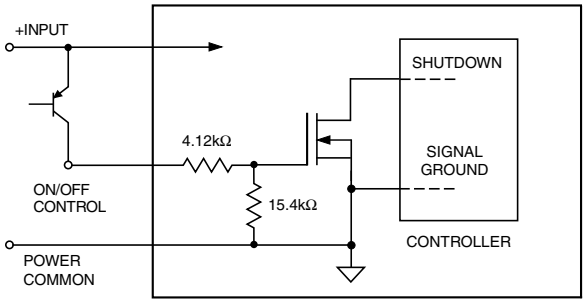


**Figure 4. Driving the On/Off Control Pin with an Open-Collector Drive Circuit**

The on/off control function, however, can be externally inverted so that the converter will be disabled while the input voltage is ramping up and then "released" once the input has stabilized.

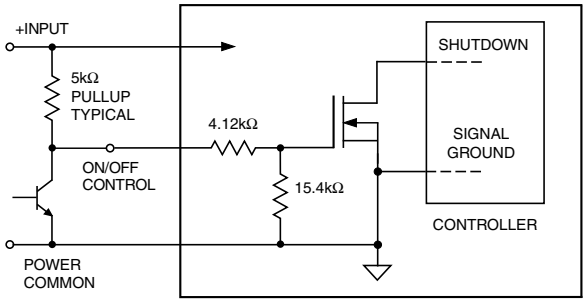


**Figure 5. Inverting On/Off Control Pin Signal and Power-Up Sequencing**

For a controlled start-up of one or more LSN-W3's, or if several output voltages need to be powered-up in a given sequence, the On/Off Control pin can be pulled high (external pull-up resistor, converter disabled) and then driven low with an external open collector device to enable the converter.

## Output Overvoltage Protection

LSN W3 Series DC/DC converters do not incorporate output overvoltage protection. In the extremely rare situation in which the device's feedback loop is broken, the output voltage may run to excessively high levels (VOUT = VIN). If it is absolutely imperative that you protect your load against any and all possible overvoltage situations, voltage limiting circuitry must be provided external to the power converter.

## Output Overcurrent Detection

Overloading the power converter's output for an extended time will invariably cause internal component temperatures to exceed their maximum ratings and eventually lead to component failure. High-current-carrying components such as inductors, FET's and diodes are at the highest risk. LSN W3 Series DC/DC converters incorporate an output overcurrent detection and shutdown function that serves to protect both the power converter and its load.

If the output current exceeds it maximum rating by typically 50% (24 Amps) or if the output voltage drops to less than 98% of it original value, the LSN W3's internal overcurrent-detection circuitry immediately turns off the converter, which then goes into a "hiccup" mode. While hiccupping, the converter will continuously attempt to restart itself, go into overcurrent, and then shut down. Under these conditions, the average output current will be approximately 400mA, and the average input current will be approximately 40mA. Once the output short is removed, the converter will automatically restart itself.

## Output Voltage Trimming

Allowable trim ranges for each model in the LSN W3 Series are ±10%. Trimming is accomplished with either a trimpot or a single fixed resistor. The trimpot should be connected between +Output and Common with its wiper connected to the Trim pin as shown in Figure 6 below.

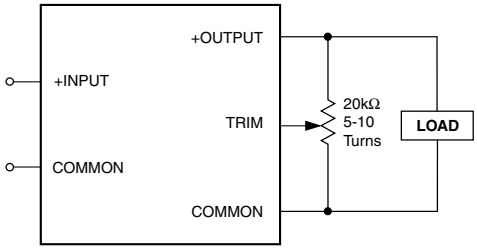


**Figure 6. Trim Connections Using a Trimpot**

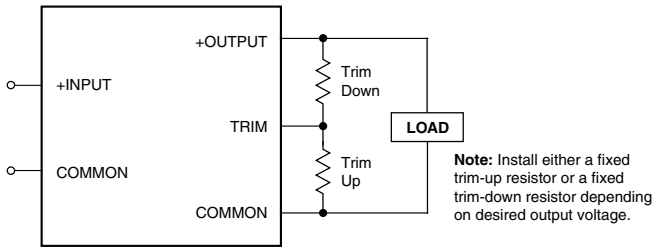


**Figure 7. Trim Connections Using Fixed Resistors**

A trimpot can be used to determine the value of a single fixed resistor which can then be connected, as shown in Figure 7, between the Trim pin and +Output to trim down the output voltage, or between the Trim pin and Common to trim up the output voltage. Fixed resistors should have absolute TCR's less than 100ppm/°C to ensure stability.

The equations below can be starting points for selecting specific trim-resistor values. Recall, untrimmed devices are guaranteed to be ±1% accurate.

**Trim Equations**

| Trim Down | Trim Up |
|---|---|
| **LSN-0.75/16-W3** | |
| No Trim Down | TBD |
| **LSN-1/16-W3** | |
| $R_{T_{DOWN}}(k\Omega) = \frac{2.21(V_O - 0.7)}{1.0 - V_O} - 2.67$ | $R_{T_{UP}}(k\Omega) = \frac{1.547}{V_O - 1.0} - 2.67$ |
| **LSN-1.2/16-W3** | |
| $R_{T_{DOWN}}(k\Omega) = \frac{2.21(V_O - 0.7)}{1.2 - V_O} - 4.75$ | $R_{T_{UP}}(k\Omega) = \frac{1.547}{V_O - 1.2} - 4.75$ |
| **LSN-1.5/16-W3** | |
| $R_{T_{DOWN}}(k\Omega) = \frac{2.21(V_O - 0.7)}{1.5 - V_O} - 7.5$ | $R_{T_{UP}}(k\Omega) = \frac{1.547}{V_O - 1.5} - 7.5$ |
| **LSN-1.8/16-W3** | |
| $R_{T_{DOWN}}(k\Omega) = \frac{7.5(V_O - 0.7)}{1.8 - V_O} - 21.5$ | $R_{T_{UP}}(k\Omega) = \frac{5.25}{V_O - 1.8} - 21.5$ |
| **LSN-2/16-W3** | |
| $R_{T_{DOWN}}(k\Omega) = \frac{7.5(V_O - 0.7)}{2.0 - V_O} - 20$ | $R_{T_{UP}}(k\Omega) = \frac{5.25}{V_O - 2.0} - 20$ |
| **LSN-2.5/16-W3** | |
| $R_{T_{DOWN}}(k\Omega) = \frac{7.5(V_O - 0.7)}{2.5 - V_O} - 16.2$ | $R_{T_{UP}}(k\Omega) = \frac{5.25}{V_O - 2.5} - 16.2$ |
| **LSN-3.3/16-W3** | |
| $R_{T_{DOWN}}(k\Omega) = \frac{7.5(V_O - 0.7)}{3.3 - V_O} - 12.1$ | $R_{T_{UP}}(k\Omega) = \frac{5.25}{V_O - 3.3} - 12.1$ |

Note: Resistor values are in kΩ. Accuracy of adjustment is subject to tolerances of resistors and factory-adjusted, initial output accuracy. $V_O$ = desired output voltage. $V_{O_{NOM}}$ = nominal output voltage.

Adjustment beyond the specified ±10% adjustment range is not recommended. When using trim in combination with Remote Sense, the maximum rated power must not be exceeded (see Remote Sense).

### "T" Model (LSN-T/16-W3)

This version of the the LSN-W3 series offers a special output voltage trimming feature which is fully compatible with competitive units. The output voltage may be varied using a single trim resistor from the Trim Input to Power Common. The output voltage range is 0.75 Volts to 3.3 Volts.

IMPORTANT: For outputs greater than 3 Volts up to 3.3 Volts maximum, the input supply must be 4.5 Volts minimum.

As with other trim adjustments, be sure to use a precision low-tempco resistor (±100 ppm/°C) mounted close to the converter with short leads. Also be aware that the output voltage accuracy is ±2% (typical) therefore you may need to vary this resistance slightly to achieve your desired output setting.

The trim equation is as follows for the LSN-T/16-W3:

$$R_{TRIM}(\Omega) = \frac{21070}{V_O - 0.7525} - 5110$$

LSN-T/16-W3 fixed resistance values to set the output voltages are:

| **VOUT (Typ.)** | 0.75V | 1.0V | 1.2V | 1.5V | 1.8V | 2.5V | 3.3V |
|---|---|---|---|---|---|---|---|
| **RTRIM (kΩ)** | Open | 80.021 | 41.973 | 23.077 | 15.004 | 6.947 | 3.16 |

CAUTION: To retain proper regulation, do not exceed the 3.3V output

### Voltage Trim

The LSN-T/16-W3 may also be trimmed using an external voltage applied between the Trim input and Output Common. Be aware that the internal "load" impedance looking into the Trim pin is approximately 5kΩ. Therefore, you may have to compensate for this in the source resistance of your external voltage reference.

The equation for this voltage adjustment is:

$$V_{TRIM}\ (\text{in Volts}) = 0.7 - (0.1698 \times (V_O - 0.7525))$$

The LSN-T/16-W3 fixed trim voltages to set the output voltage are:

| **VOUT (Typ.)** | 0.75V | 1.0V | 1.2V | 1.5V | 1.8V | 2.5V | 3.3V |
|---|---|---|---|---|---|---|---|
| **VTRIM** | Open | 0.6928V | 0.624V | 0.5731V | 0.5221V | 0.4033V | 0.267V |

### Output Reverse Conduction

Many DC/DC's using synchronous rectification suffer from Output Reverse Conduction. If those devices have a voltage applied across their output before a voltage is applied to their input (this typically occurs when another power supply starts before them in a power-sequenced application), they will either fail to start or self destruct. In both cases, the cause is the "freewheeling" or "catch" FET biasing itself on and effectively becoming a short circuit.

LSN W3 DC/DC converters do not suffer from Output Reverse Conduction. They employ proprietary gate drive circuitry that makes them immune to moderate applied output overvoltages.

### Thermal Considerations and Thermal Protection

The typical output-current thermal-derating curves shown below enable designers to determine how much current they can reliably derive from each model of the LSN W3 Series under known ambient-temperature and air-flow conditions. Similarly, the curves indicate how much air flow is required to reliably deliver a specific output current at known temperatures.

The highest temperatures in LSN W3's occur at their output inductor, whose heat is generated primarily by $I^2R$ losses. The derating curves were developed using thermocouples to monitor the inductor temperature and varying the load to keep that temperature below +110°C under the assorted conditions of air flow and air temperature. Once the temperature exceeds +115°C (approx.), the thermal protection will disable the converter. Automatic restart occurs after the temperature has dropped below +110°C.

As you may deduce from the derating curves and observe in the efficiency curves on the following pages, LSN W3's maintain virtually constant efficiency from half to full load, and consequently deliver very impressive temperature performance even if operating at full load.

Lastly, when LSN W3's are installed in system boards, they are obviously subject to numerous factors and tolerances not taken into account here. If you are attempting to extract the most current out of these units under demanding temperature conditions, we advise you to monitor the output-inductor temperature to ensure it remains below +110°C at all times.

### 20 Amps Extended Operation

Under restricted conditions, the LSN W3 models with low output voltages may produce up to 20 Amps of output current up to approximately +45°C ambient temperature. There is no model number change. The Derating curve illustrates typical performance. For this test, the converter was mounted on a 12cm x12cm double-sided pc board with 2 ounce copper. This 20 Amp operation is available with the following restrictions:

- Only 1.2 Volt and 1.5 Volt output models are verified for operation at this time.
- The user must assure that there is adequate airflow at all times with no airflow blockage by other large components. Make sure no adjacent components have high temperatures. Be aware of systems using a CPU temperature monitor to control the fan.
- Use only low to moderate ambient temperature.
- The user must assure that the total output power is not exceeded.
- This operation applies only to nominal input line voltage. Since efficiency degrades at low line voltage, internal heat dissipation increases, thereby exceeding the maximum output power.

The Derating curve is drawn where the hot spot on the converter (usually a power FET) reaches approximately +115°C. Although operation is possible slightly beyond this point, DATEL strongly advises using this as the maximum temperature for greatest reliability.

**LSN-1.2/16-W3 Maximum Output Current vs. Ambient Temperature**
(VIN = 3.3V)

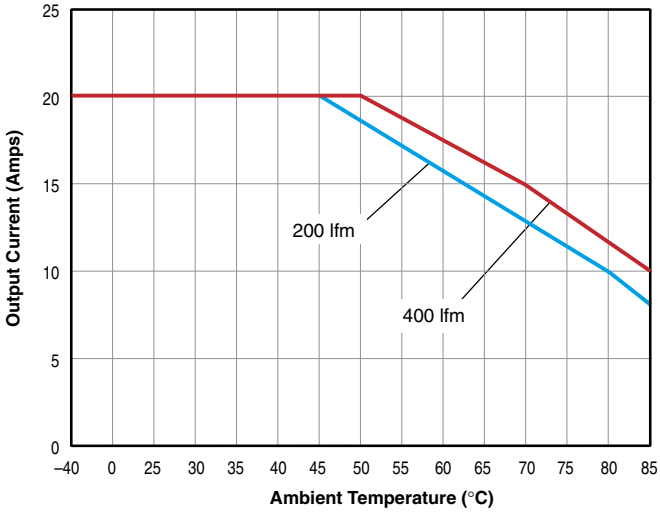


Do not forget that a small overcurrent glitch while running 20 Amps output could instantly shut down the converter using the Over Current sensor. This margin of safety is considerably wider at 16 Amps maximum current. Make sure your output current usage is smooth!! If you are in doubt, contact DATEL to discuss your application.

### Product Adaptations

Murata Power Solutions offers variations of our core product family. These products are available under scheduled quantity orders and may also include separate manufacturing documentation from a mutually-agreeable Product Specification. Since these product adaptations largely share a common parts list, similar specifications and test methods with their root products, they are provided at excellent costs and delivery. Please contact MPS for details.

As of this date, the following product is available:
LSN-T/16-W3HHL2-Y
This model includes conformal coating added, special pin length and RoHS-5 hazardous substance compliance (with lead).

## Typical Performance Curves

**LSN-T/16-W3**
**Efficiency vs. Line Voltage and Load Current @ 25°C (VOUT = 0.75V)**

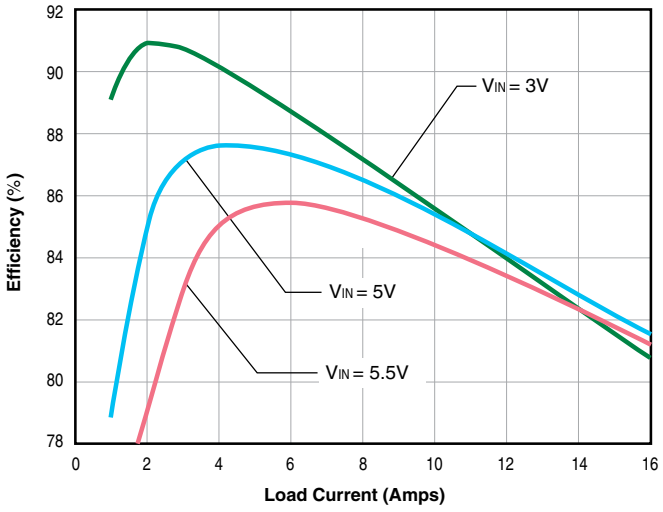


**LSN-T/16-W3**
**Efficiency vs. Line Voltage and Load Current @ 25°C (VOUT = 3.3V)**

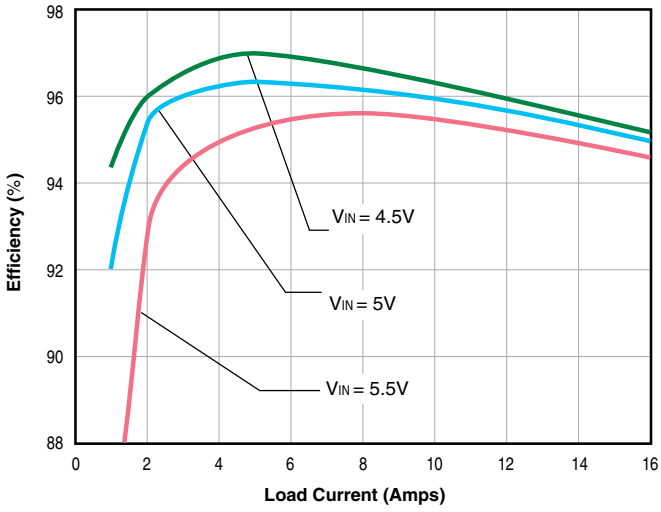


**LSN-T/16-W3 Maximum Output Current vs. Ambient Temperature**
(VOUT = 3.3V, VIN = 5V)

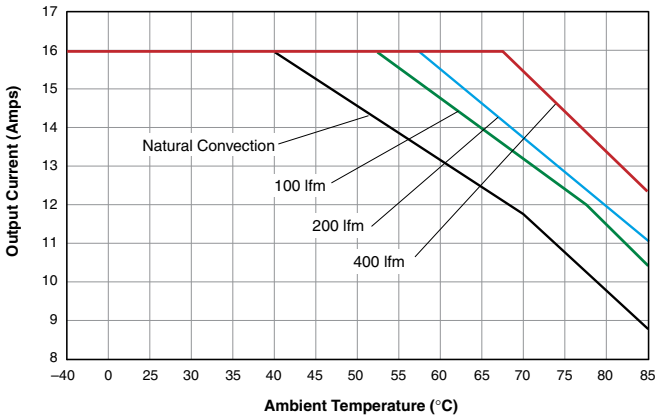

# Single Output LSN-W3 Models

Non-Isolated, 3-5.5VIN, 0.75-3.3VOUT
16 Amp DC/DC Converters

## PART NUMBER STRUCTURE

L SN - 1.8 / 16 - W3 H - C

**Output Configuration:**
**L** = Unipolar Low Voltage

**Non-Isolated SIP**

**Nominal Output Voltage:**
0.75, 1, 1.2, 1.5, 1.8, 2, 2.5, 3.3 or 0.75-3.3 Volts

**Maximum Rated Output**
Current in Amps

**Input Voltage Range:**
**W3** = 3-5.5 Volts (5V nominal)

**Blank =** Vertical Mount
**H =** Horizontal Mount
**J =** Reversed Pin Vertical Mount

**RoHS-6 compliant***

* Contact MPS for availability.

**Note:** Not all model number combinations are available. Contact MPS.

## MECHANICAL SPECIFICATIONS

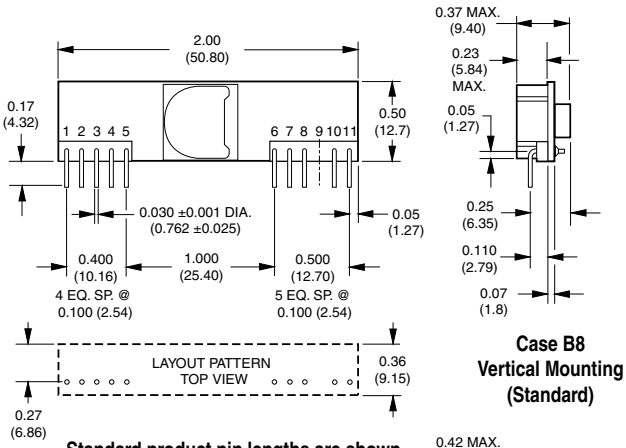


**Case B8**
**Vertical Mounting**
**(Standard)**

**Standard product pin lengths are shown.**

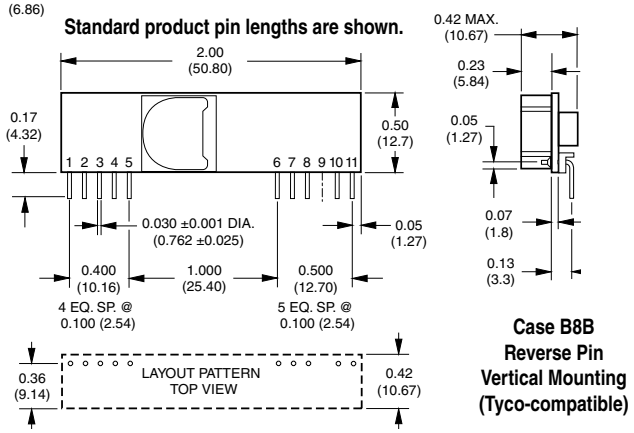


**Case B8B**
**Reverse Pin**
**Vertical Mounting**
**(Tyco-compatible)**

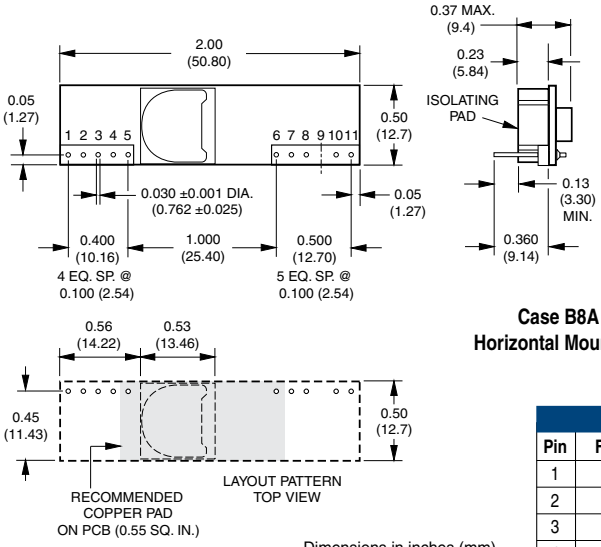


**Case B8A**
**Horizontal Mounting**

Dimensions in inches (mm)

**I/O Connections**

| Pin | Function P59 | Pin | Function P59 | Pin | Function P59 |
|---|---|---|---|---|---|
| 1 | +Output | 5 | Common | 9 | No Pin |
| 2 | +Output | 6 | Common | 10 | VOUT Trim |
| 3 | +Sense | 7 | +Input | 11 | On/Off Control |
| 4 | +Output | 8 | +Input | | |

**Component locations are typical and may vary.**

Murata Power Solutions, Inc.
129 Flanders Road, Westborough, MA 01581 U.S.A.
ISO 9001 and 14001 REGISTERED

**This product is subject to the following operating requirements and the Life and Safety Critical Application Sales Policy:**
**Refer to: http://www.murata-ps.com/requirements/**

Murata Power Solutions, Inc. makes no representation that the use of its products in the circuits described herein, or the use of other technical information contained herein, will not infringe upon existing or future patent rights. The descriptions contained herein do not imply the granting of licenses to make, use, or sell equipment constructed in accordance therewith. Specifications are subject to change without notice.
*© 2018 Murata Power Solutions, Inc.*