Murata Power Solutions

NTV Series

3kVDC Isolated 1W Dual Output SM DC/DC Converters



FEATURES

- RoHS compliant
- Efficiency up to 82%
- Wide temperature performance at full 1 Watt load, –40°C to 85°C
- UL 94V-0 package material
- Footprint over pins 1.64cm²
- Lead frame technology
- Dual isolated output
- 5V & 12V input
- 5V, 9V, 12V and 15V output
- Internal SMD construction
- Toroidal magnetics
- Plastic encapsulated
- 3kVDC isolation (1 minute)
- MTTF up to 1.7 million hours
- Power density 1.36W/cm³
- No heatsink required
- Custom solutions available
- Multi layer ceramic capacitors

PRODUCT OVERVIEW

The NTV series of 3kV isolation miniature surface mounted DC/DC converters employ leadframe technology and transfer moulding techniques to bring all of the benefits of IC style packaging to hybrid circuitry. The co-planarity of the pin positions is based upon IEC 191-6:1990. The devices are suitable for all applications where high volume production is envisaged.

SELECTION GUIDE

Order Code[1]	Nominal Input Voltage	Output Voltage	Output Current	Input Current at Rated Load	Efficiency	Isolation Capacitance	MTTF[2]
	V	V	mA	mA	%	pF	kHrs
NTV0505MC	5	±5	±100	282	71	33	1697
NTV0509MC	5	±9	±55	260	77	38	682
NTV0512MC	5	±12	±42	253	79	44	343
NTV0515MC	5	±15	±33	250	80	43	188
NTV1205MC	12	±5	±100	114	73	50	559
NTV1209MC	12	±9	±55	105	79	72	375
NTV1212MC	12	±12	±42	104	80	89	243
NTV1215MC	12	±15	±33	101	82	100	154

When operated **with** additional external load capacitance the rise time of the input voltage will determine the maximum external capacitance value for guaranteed start up. The slower the rise time of the input voltage the greater the maximum value of the additional external capacitance for reliable start up.

INPUT CHARACTERISTICS

Parameter	Conditions	Min.	Typ.	Max.	Units
Voltage range	Continuous operation, 5V input types	4.5	5	5.5	V
	Continuous operation, 12V input types	10.8	12	13.2	
Reflected ripple current			41	47	mA p-p

OUTPUT CHARACTERISTICS

Parameter	Conditions	Min.	Typ.	Max.	Units
Rated Power	T_A=-40°C to 85°C			1.0	W
Voltage Set Point Accuracy	See tolerance envelope				
Line regulation	High V_{IN} to low V_{IN}		1.0	1.2	%/%
Load Regulation[3]	10% load to rated load, 5V output types		10	12	%
	10% load to rated load, 9V output types		6.5	8.0	
	10% load to rated load, 12V output types		6.0	8.5	
	10% load to rated load, 15V output types		6.0	7.0	
Ripple and Noise	BW=DC to 20MHz, 5V output types		50	75	mV p-p
	BW=DC to 20MHz, 9V output types		40	65	
	BW=DC to 20MHz, 12V output types		40	60	
	BW=DC to 20MHz, 15V output types		40	60	

ABSOLUTE MAXIMUM RATINGS

Internal power dissipation	550mW
Input voltage V_{IN}, NTV05 types	7V
Input voltage V_{IN}, NTV12 types	15V

1. If components are required in tape and reel format suffix order code code with -R, e.g. NTV0505MC-R.
2. Calculated using MIL-HDBK-217F with nominal input voltage at full load.
3. 12V input types have typically 3% less load regulation change.

All specifications typical at T_A=25°C, nominal input voltage and rated output current unless otherwise specified.

ROHS COMPLIANT

For full details go to
www.murata-ps.com/rohs

ISOLATION CHARACTERISTICS

Parameter	Conditions	Min.	Typ.	Max.	Units
Isolation test voltage	Flash tested for 1 minute	3000			VDC
Resistance	Viso= 1000VDC	10			GΩ

GENERAL CHARACTERISTICS

Parameter	Conditions	Min.	Typ.	Max.	Units
Switching frequency	5V input types		115		kHz
	12V input types		120		

TEMPERATURE CHARACTERISTICS

Parameter	Conditions	Min.	Typ.	Max.	Units
Specification	All output types	-40		85	°C
Storage		-55		125	
Case temperature above ambient	5V output types		33		
	All other output types		25		
Cooling	Free air convection				

TEMPERATURE DERATING GRAPH

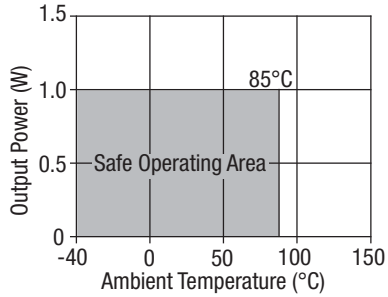

TOLERANCE ENVELOPE

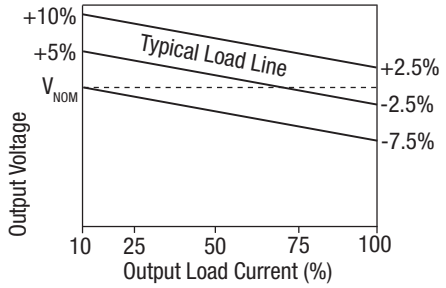

TECHNICAL NOTES

ISOLATION VOLTAGE

'Hi Pot Test', 'Flash Tested', 'Withstand Voltage', 'Proof Voltage', 'Dielectric Withstand Voltage' & 'Isolation Test Voltage' are all terms that relate to the same thing, a test voltage, applied for a specified time, across a component designed to provide electrical isolation, to verify the integrity of that isolation.

Murata Power Solutions NTV series of DC/DC converters are all 100% production tested at their stated isolation voltage. This is 3kVDC for 1 minute.

A question commonly asked is, "What is the continuous voltage that can be applied across the part in normal operation?"

For a part holding no specific agency approvals, such as the NTV series, both input and output should normally be maintained within SELV limits i.e. less than 42.4V peak, or 60VDC. The isolation test voltage represents a measure of immunity to transient voltages and the part should never be used as an element of a safety isolation system. The part could be expected to function correctly with several hundred volts offset applied continuously across the isolation barrier; but then the circuitry on both sides of the barrier must be regarded as operating at an unsafe voltage and further isolation/insulation systems must form a barrier between these circuits and any user-accessible circuitry according to safety standard requirements.

REPEATED HIGH-VOLTAGE ISOLATION TESTING

It is well known that repeated high-voltage isolation testing of a barrier component can actually degrade isolation capability, to a lesser or greater degree depending on materials, construction and environment. The NTV series has toroidal isolation transformers, with no additional insulation between primary and secondary windings of enameled wire. While parts can be expected to withstand several times the stated test voltage, the isolation capability does depend on the wire insulation. Any material, including this enamel (typically polyurethane) is susceptible to eventual chemical degradation when subject to very high applied voltages thus implying that the number of tests should be strictly limited. We therefore strongly advise against repeated high voltage isolation testing, but if it is absolutely required, that the voltage be reduced by 20% from specified test voltage.

This consideration equally applies to agency recognized parts rated for better than functional isolation where the wire enamel insulation is always supplemented by a further insulation system of physical spacing or barriers.

MINIMUM LOAD

The minimum load to meet datasheet specification is 10% of the full rated load across the specified input voltage range. Lower than 10% minimum loading will result in an increase in output voltage, which may rise to typically double the specified output voltage if the output load falls to less than 5%.

PACKAGE SPECIFICATIONS

MECHANICAL DIMENSIONS

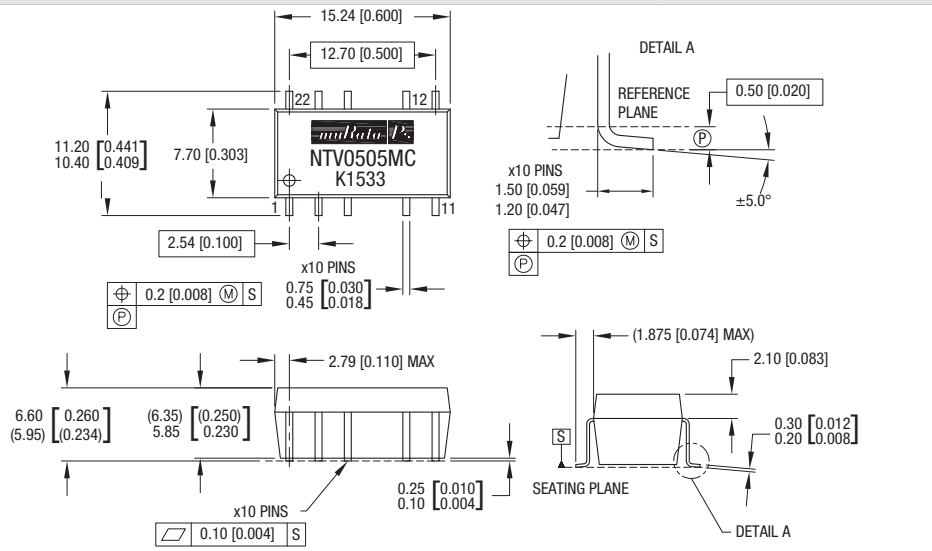

All dimensions in mm ±0.25mm (inches ±0.01). All pins on a 2.54 (0.1) pitch.

Weight: 1.53g

PIN CONNECTIONS

Pin	Function
1	$-V_{IN}$
3	$+V_{IN}$
5	NA
9	0V
11	$-V_{OUT}$
12	NA
14	$+V_{OUT}$
18	NA
20	NA
22	NA

NA - Not available for electrical connection.

RECOMMENDED FOOTPRINT DETAILS

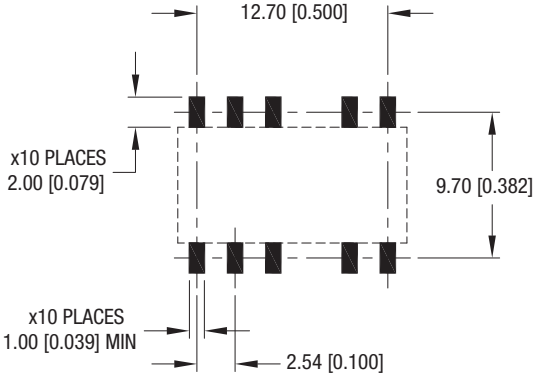

TUBE OUTLINE DIMENSIONS

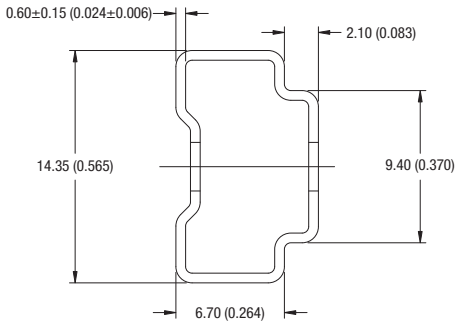

Unless otherwise stated all dimensions in mm±0.5 (inches ±0.02).
Tube length : 475±2.0 (18.70±0.07).

Tube Quantity : 25

RoHS COMPLIANCE, MSL AND PSL INFORMATION

RoHS COMPLIANT

This series is compatible with RoHS soldering systems and is also backward compatible with Sn/Pb soldering systems. The NTV series has a process, moisture, and reflow sensitivity classification of MSL1 PSL R7F as defined in J-STD-020 and J-STD-075. This translates to: MSL1 = unlimited floor life, PSL R7F = Peak reflow temperature 245°C with a limitation on the time above liquidus (217°C) which for this series is 60sec max. The pin termination finish on this product series is Gold with a plating thickness of 0.05 microns minimum.

For further information please visit www.murata-ps.com/rohs

TAPE & REEL SPECIFICATIONS

REEL OUTLINE DIMENSIONS

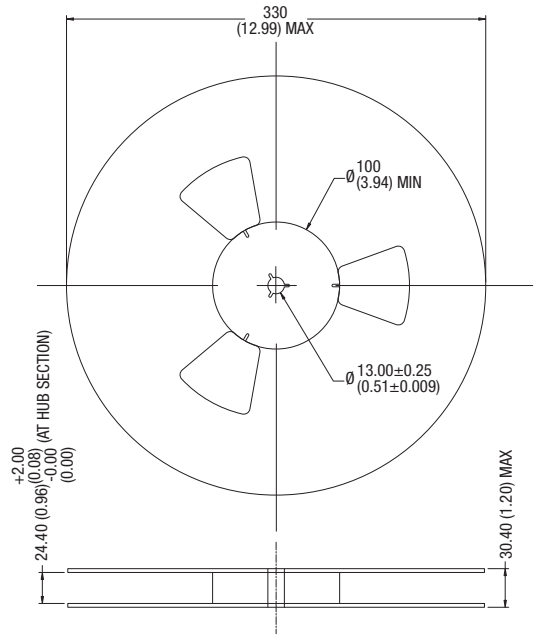

TAPE OUTLINE DIMENSIONS

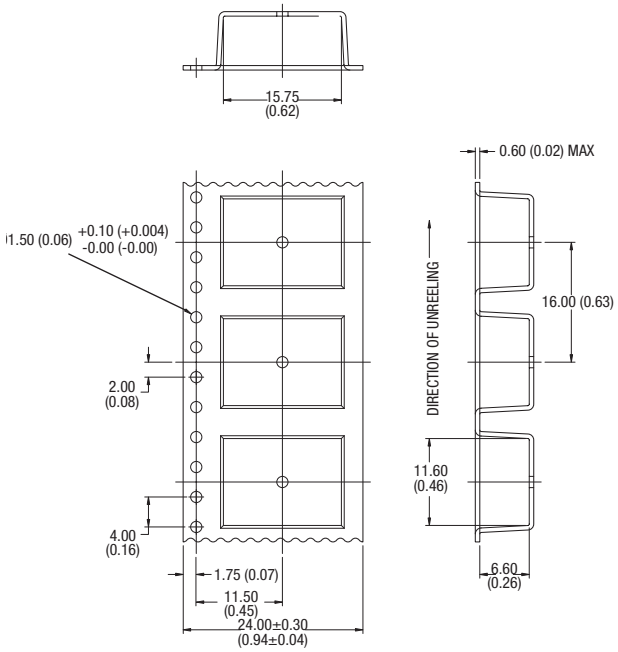

REEL PACKAGING DETAILS

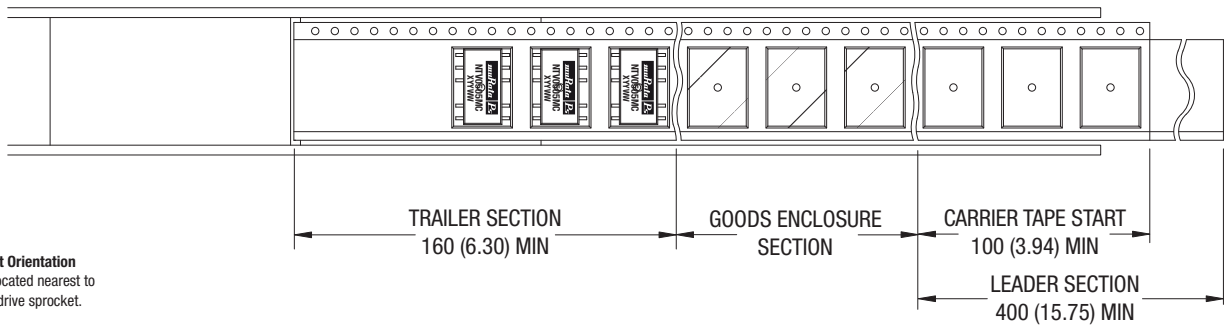

Product Orientation
Pin 1, located nearest to carrier drive sprocket.

Reel Quantity : 500

Murata Power Solutions, Inc. makes no representation that the use of its products in the circuits described herein, or the use of other technical information contained herein, will not infringe upon existing or future patent rights. The descriptions contained herein do not imply the granting of licenses to make, use, or sell equipment constructed in accordance therewith. Specifications are subject to change without notice.
© 2015 Murata Power Solutions, Inc.