Murata Power Solutions

UCE Series

Isolated, High-Density, Eighth-Brick Low Profile DC-DC Converters

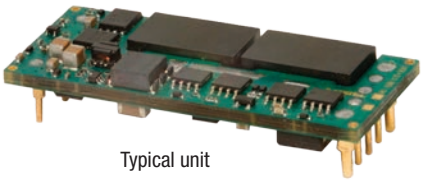

Typical unit

FEATURES

- Industry standard eighth-brick pinout and package
- Low profile 0.4" height with 0.9" x 2.3" outline dimensions
- 36 to 75 Vdc input range (48V nominal)
- Fully isolated, 2250 Vdc (BASIC) insulation
- Outstanding thermal performance and derating
- Extensive self-protection and short circuit features with no output reverse conduction
- On/Off control, trim and sense functions
- Interleaved synchronous rectification yields high efficiency over 90%
- Fully protected against temperature and voltage limits
- RoHS-6 or RoHS-5 compliant
- Certified to UL/EN/IEC 60950-1 and CAN/CSA C22.2 No. 60950-1, 2nd Edition safety approvals

For efficient, fully isolated DC power in the smallest space, the UCE open frame DC-DC converter series fit in industry-standard “eighth brick” outline dimensions and mounting pins (on quarter-brick pinout).

PRODUCT OVERVIEW

Units are offered with fixed output voltages from 1.5 to 12 Volts and currents up to 30 Amps. UCEs operate over a wide temperature range (up to +85 degrees Celsius at moderate airflow) with full rated power. Interleaved synchronous rectifier topology yields excellent efficiency over 90% and no reverse output conduction.

UCEs achieve these impressive mechanical and environmental specs while delivering excellent electrical performance in a through-hole package. Overall noise is typically 50 mV pk-pk (low voltage models) with fast step response. These converters offer tight output regulation and high stability even with no load. The unit is fully protected against input undervoltage, output overcurrent and short circuit. An on-board temperature sensor shuts down the converter if thermal limits are reached. “Hiccup” output protection automatically restarts the converter when the fault is removed.

A convenient remote On/Off control input enables phased startup and shutdown in multi-voltage applications. To compensate for longer wiring and to retain output voltage accuracy at the load, UCEs employ a Sense input to dynamically correct for ohmic losses. A trim input may be connected to a user’s adjustment potentiometer or trim resistors for output voltage calibration. The UCE will tolerate substantial capacitive loading for bypass-cap applications.

UCEs include industry-standard safety certifications and BASIC I/O insulation provides input/output isolation to 2250V. Radiation emission testing is performed to widely-accepted EMC standards.

SIMPLIFIED BLOCK DIAGRAM

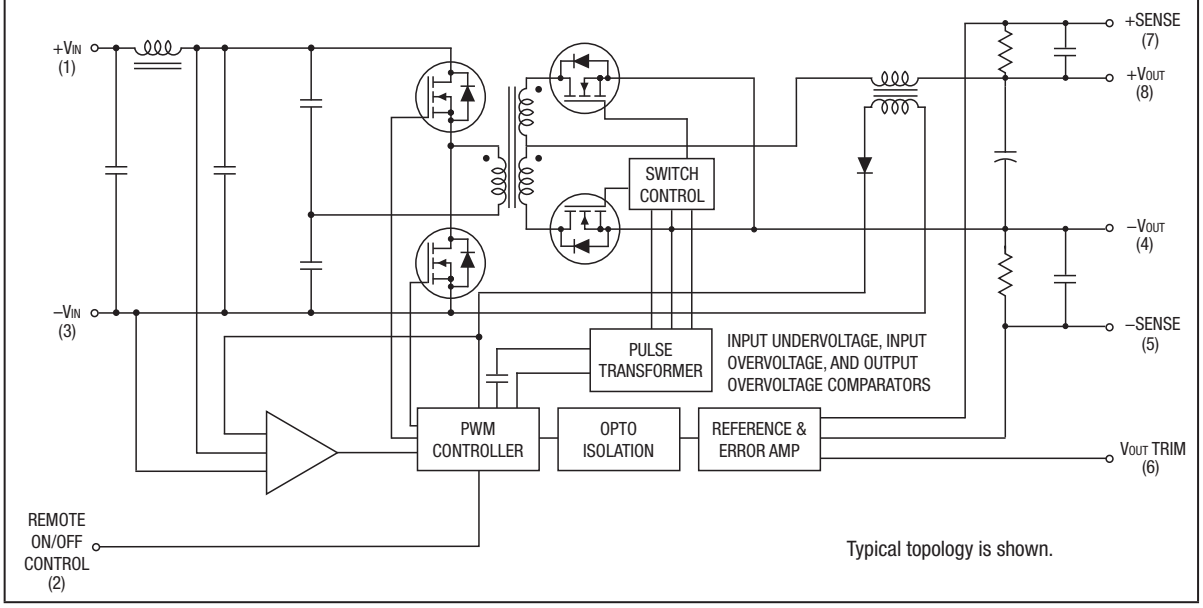

Figure 1. Simplified Block Diagram

RoHS COMPLIANT

For full details go to www.murata-ps.com/rohs

c UL us

PERFORMANCE SPECIFICATIONS SUMMARY AND ORDERING GUIDE

	Model Family	Output							Input				Efficiency		Package	
		V_{OUT} (V)	I_{OUT} (A)	Power (W)	Ripple & Noise (mVp-p) Typ.	Ripple & Noise (mVp-p) Max.	Regulation (max.) Line	Regulation (max.) Load	V_{IN} Nom. (V)	Range (V)	I_{IN}, no load (mA)	I_{IN}, full load (A)	Min.	Typ.	Case	Pinout
Discontinued	UCE-1.2/25-D48	1.2	25	30	Please contact Murata Power Solutions for further information.											
Discontinued	UCE-1.5/20-D48	1.5	20	30	50	100	±0.15%	±0.3%	48	36-75	50	0.72	85%	87%	C56	P32
Discontinued	UCE-1.5/40-D48	1.5	40	60	Please contact Murata Power Solutions for further information.											
Discontinued	UCE-1.8/30-D48	1.8	30	54	30	80	±0.125%	±0.25%	48	36-75	45	1.28	87%	88%	C56	P32
Discontinued	UCE-2.5/20-D48	2.5	20	50	50						50	1.14	88%	91%		
Discontinued	UCE-3.3/15-D48	3.3	15	49.5		100					60	1.15	86%	90%		
Discontinued	UCE-3.3/30-D48	3.3	30	99			±0.1%	±0.2%				2.27	89%	91%		
Discontinued	UCE-5/10-D48	5	10	50			±0.125%	±0.25%			30	1.15	88%	90.5%		
	UCE-5/20-D48	5	20	100	30	60					50	2.25	90%	92.5%		
Discontinued	UCE-12/4.2-D48	12	4.2	50.4	150	300						1.14	86%	92%		
Discontinued	UCE-12/8.3-D48	12	8.3	99.6	200							2.31		90%		
Discontinued	UCE-12/10-D48	12	10	120								2.78				

① Please refer to the model number structure for additional ordering part numbers and options.

PART NUMBER STRUCTURE

U CE - 3.3 / 30 - D48 N B H Lx - C

Output Configuration:
U = Unipolar/Single

Eighth-Brick Package

Nominal Output Voltage

Maximum Rated Output
Current in Amps

Input Voltage Range:
D48 = 36-75V, 48V nominal

On/Off Control Logic
N = Negative logic, standard
P = Positive logic, optional

Baseplate (optional, not available on some models)
Blank = No baseplate, standard
B = Baseplate installed, optional, special quantity order

Conformal coating (optional)
Blank = no coating, standard
H = Coating added, optional, special quantity order

Pin Length Option *(Through-hole packages only)*
Blank = Standard pin length 0.180 inches (4.6mm)
L1 = Pin length 0.110 inches (2.79mm)*
L2 = Pin length 0.145 inches (3.68mm)*

*Special quantity order is required; no sample quantities available.

RoHS Hazardous Materials compliance
C = RoHS6 (does not claim EU RoHS exemption 7b–lead in solder), standard
Y = RoHS5 (with lead), optional, special quantity order Discontinued

Note: Some model combinations may not be available. Contact Murata Power Solutions for availability.

As of September 2017, ONLY the following part numbers will be available: UCE-5/20-D48N-C; UCE-5/20-D48NB-C.

Product Adaptations

Murata Power Solutions offers several variations of our core product family. These products are available under scheduled quantity orders and may also include separate manufacturing documentation from a mutually agreeable Product Specification. Since these product adaptations largely share a common parts list and similar specifications and test methods with their root products, they are provided at excellent costs and delivery. Please contact Murata Power Solutions for details.

As of this date, the following products are available:

UCE-3.3/30-D48NHL2-Y

UCE-12/4.2-D48NHL2-Y Discontinued

These models are all negative On/Off logic, no baseplate, conformal coating added, 3.68mm pin length, and RoHS-5 hazardous substance compliance (with lead).

FUNCTIONAL SPECIFICATIONS

INPUT CHARACTERISTICS

Model Family	Start-up threshold Min. (A)	Under-voltage Shut-down (V)	Reflected (back) Ripple Current (mA)②	Inrush Transient A^2sec	Output Short Circuit (mA)	Low Line (V_{IN}=min.) (A)	Standby Mode (mA)	Internal Input Filter Type	Reverse Polarity Protection	Remote On/Off Control: Current (mA)	Remote On/Off Control: Positive Logic "P" Model Suffix	Remote On/Off Control: Negative Logic "N" Model Suffix
UCE-1.5/20-D48	34	32	10-30, model dependent	0.05 A^2sec	50-150, model dependent	0.97	1-10, model dependent	L-C	None, install external fuse	1.0	OFF=Ground pin to +1V max. ON=open or +3.5 to +15V max.	OFF=open or +2.5V to +15V max. ON=Ground pin to +0.8V max.
UCE-1.8/30-D48		32.5				1.72						
UCE-2.5/20-D48		32				1.53						
UCE-3.3/15-D48		32				1.54						
UCE-3.3/30-D48		32				3.06						
UCE-5/10-D48	34.5	32				1.53		Pi				
UCE-5/20-D48	34	31.5				3.00		Pi				
UCE-12/4.2-D48	34	32				1.52		L-C				
UCE-12/8.3-D48						3.07						
UCE-12/10-D48					500	3.70						

OUTPUT CHARACTERISTICS

Model Family	V_{OUT} Accuracy 50% Load % of V_{NOM}	Capacitive Loading Max. Low ESR <0.02Ω Max. µF	Adjustment Range	Temperature Coefficient	Minimum Loading	Remote Sense Compen-sation	Ripple/ Noise (20 MHz bandwidth)	Line/Load Regulation	Efficiency	Current Limit Inception 98% of Vout, after warmup A
UCE-1.5/20-D48	±1%	10,000	–10 to +10% of Vnom.	±0.02% of Vout range per °C	No minimum load	+10%	See ordering guide			24.5
UCE-1.8/30-D48										36
UCE-2.5/20-D48										32
UCE-3.3/15-D48										24
UCE-3.3/30-D48										35
UCE-5/10-D48		1000								15.
UCE-5/20-D48		10,000								23 min.
UCE-12/4.2-D48		1000								5.5
UCE-12/8.3-D48										12
UCE-12/10-D48										13

ISOLATION CHARACTERISTICS

Model Family	Input to Output Min. V	Input to baseplate Min. V	Baseplate to output Min. V	Isolation Resistance MΩ	Isolation Capacitance pF	Isolation Safety Rating
UCE-1.5/20-D48	2250	1500	1500	100	1000	Basic Insulation
UCE-1.8/30-D48				10		
UCE-2.5/20-D48				100		
UCE-3.3/15-D48						
UCE-3.3/30-D48						
UCE-5/10-D48						
UCE-5/20-D48						
UCE-12/4.2-D48						
UCE-12/8.3-D48						
UCE-12/10-D48						

FUNCTIONAL SPECIFICATIONS, CONTINUED

MISCELLANEOUS CHARACTERISTICS

Model Family	Calculated MTBF[4]	Operating Temperature Range with derating (°C)	Operating PCB Temperature (no derating)	Storage Temperature Range (°C)	Thermal Protection/ Shutdown (ºC)	Short Circuit Current (A)	Overvoltage Protection[12] (V) Via magnetic feedback (V)	Short Circuit Protection Method	Short Circuit Duration[16]	Relative Humidity (non-condensing)
UCE-1.5/20-D48	TBC	–40 to +85	–40 to +110 (model dependent)	–55 to +125	120	5	1.95	Current limiting, hiccup autorestart. Remove overload for recovery.	Continuous, output shorted to ground. No damage.	to +85°C/85%
UCE-1.8/30-D48							2.8 V. max			
UCE-2.5/20-D48	1.8 M HRS						3			
UCE-3.3/15-D48	2.4 M HRS						4.25			
UCE-3.3/30-D48										
UCE-5/10-D48	2.6 M HRS				110	0.5	7 max.			
UCE-5/20-D48	2.7 M HRS									
UCE-12/4.2-D48	TBC				125	5	14.5			
UCE-12/8.3-D48	2.4 M HRS									
UCE-12/10-D48										

DYNAMIC CHARACTERISTICS

Model Family	Dynamic Load Response (50-75-50% load step) to 1% of final value, µSec (See note 1)	Start-up Time		Switching Frequency KHz
		VIN to VOUT regulated (Max.)	Remote On/ Off to VOUT regulated (Max.)	
		mSec		
UCE-1.5/20-D48	100	50	50	480
UCE-1.8/30-D48	150	10	10	400
UCE-2.5/20-D48	100	50	50	350
UCE-3.3/15-D48	200	50	50	480
UCE-3.3/30-D48	50	15	10	380
UCE-5/10-D48	100	50	50	400
UCE-5/20-D48	100 max.	10	10	330
UCE-12/4.2-D48	30	60	60	200
UCE-12/8.3-D48	50	50	50	
UCE-12/10-D48	50	60	60	

ABSOLUTE MAXIMUM RATINGS

Input Voltage:	
Continuous:	
48 Volt input models	75 Volts
Transient (100 mSec. Max.)	
48 Volt input models	100 Volts
On/Off Control	+15 Volts
Input Reverse Polarity Protection	None, install external fuse.
Output Overvoltage Protection	Magnetic feedback. See specifications.
Output Current	Current-limited. Devices can withstand sustained short circuit without damage.
Storage Temperature	–40 to +125°C.
Lead Temperature	See soldering guidelines.

Absolute maximums are stress ratings. Exposure of devices to greater than any of these conditions may adversely affect long-term reliability. Proper operation under conditions other than those listed in the Performance/Functional Specifications Table is not implied or recommended.

FUNCTIONAL SPECIFICATIONS, CONTINUED

PERFORMANCE SPECIFICATION NOTES

(1) All models are tested and specified with external 1||10 µF ceramic/tantalum output capacitors and no external input capacitor. All capacitors are low ESR types. These capacitors are necessary to accommodate our test equipment and may not be required to achieve specified performance in your applications. All models are stable and regulate within spec under no-load conditions.

General conditions for Specifications are +25 deg.C, V_{IN} = nominal, V_{OUT} = nominal, full load. Adequate airflow must be supplied for extended testing under power.

(2) Input Ripple Current is tested and specified over a 5 Hz to 20 MHz bandwidth. Input filtering is C_{IN} = 33 µF, 100V tantalum, C_{BUS} = 220 µF, 100V electrolytic, L_{BUS} = 12 µH.

(3) Note that Maximum Power Derating curves indicate an average current at nominal input voltage. At higher temperatures and/or lower airflow, the DC-DC converter will tolerate brief full current outputs if the total RMS current over time does not exceed the Derating curve. All Derating curves are presented at sea level altitude. Be aware of reduced power dissipation with increasing density altitude.

(4) Mean Time Before Failure is calculated using the Telcordia (Belcore) SR-332 Method 1, Case 3, ground fixed conditions, Tpcboard=+25 deg.C, full output load, natural air convection.

(5) The On/Off Control is normally controlled by a switch. But it may also be driven with external logic or by applying appropriate external voltages which are referenced to Input Common. The On/Off Control Input should use either an open collector or open drain transistor.

(6) Short circuit shutdown begins when the output voltage degrades approximately 2% from the selected setting.

(7) The outputs are not intended to sink appreciable reverse current. This may damage the outputs.

(8) Output noise may be further reduced by adding an external filter. See I/O Filtering and Noise Reduction.

(9) All models are fully operational and meet published specifications, including "cold start" at –40ºC.

(10) Regulation specifications describe the deviation as the line input voltage or output load current is varied from a nominal midpoint value to either extreme.

(11) Alternate pin length and/or other output voltages are available under special quantity order.

(12) Output overvoltage is non-latching. When the overvoltage fault is removed, the converter will immediately recover.

(13) Do not exceed maximum power specifications when adjusting the output trim.

(14) At zero output current, the output may contain low frequency components which exceed the ripple specification. The output may be operated indefinitely with no load.

(15) If reverse polarity is accidentally applied to the input, a body diode will become forward biased and will conduct considerable current. To ensure reverse input protection with full output load, always connect an external input fuse in series with the $+V_{IN}$ input.

PHYSICAL CHARACTERISTICS

Outline dimensions		See mechanical specs (below)
Pin material		Copper alloy
Pin diameter		0.04/0.062" (1.016/1.524mm)
Pin finish		Nickel underplate with gold overplate
Weight	UCE-1.5/20-D48	0.67 ounces (19 grams)
	UCE-1.8/30-D48,	0.71 ounces (20 grams)
	UCE-2.5/20-D48	
	UCE-5/10-D48	
	UCE-5/20-D48	
	UCE-12/4.2-D48	
	UCE-3.3/15-D48	1 ounce (28 grams)
	UCE-3.3/30-D48, UCE-12/8.3-D48, UCE-12/10-D48	0.81 ounces (23 grams)
Electromagnetic interference (external filter required)		Meets EN55022/CISPR22 (requires external filter)
Safety		Certified to UL/cUL 60950-1, CSA-C22.2 No. 60950-1, IEC/EN 60950-1, 2nd Edition

SOLDERING GUIDELINES

Murata Power Solutions recommends the specifications below when installing these converters. These specifications vary depending on the solder type. Exceeding these specifications may cause damage to the product. Your production environment may differ; therefore please thoroughly review these guidelines with your process engineers.

Wave Solder Operations for through-hole mounted products (THMT)

For Sn/Ag/Cu based solders:

Maximum Preheat Temperature	115ºC.
Maximum Pot Temperature	270ºC.
Maximum Solder Dwell Time	7 seconds

For Sn/Pb based solders:

Maximum Preheat Temperature	105ºC.
Maximum Pot Temperature	250ºC.
Maximum Solder Dwell Time	6 seconds

TYPICAL PERFORMANCE DATA

UCE-1.5/20-D48 Efficiency vs Line Voltage & Load Current @ 25ºC

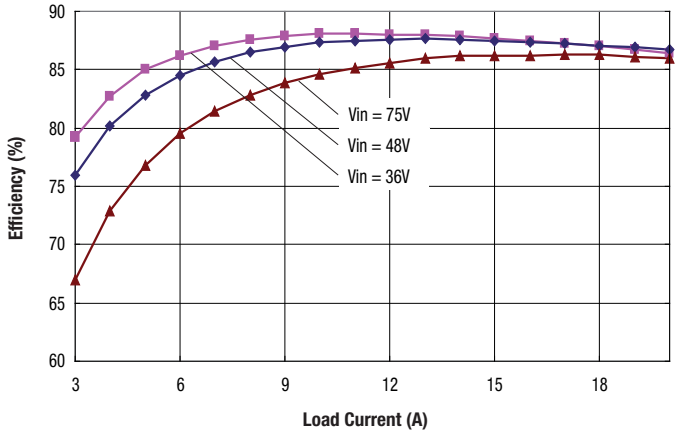

UCE-1.5/20-D48 Maximum Current Temperature Derating
(Vin = 48V, no baseplate, longitudinal airflow at sea level)

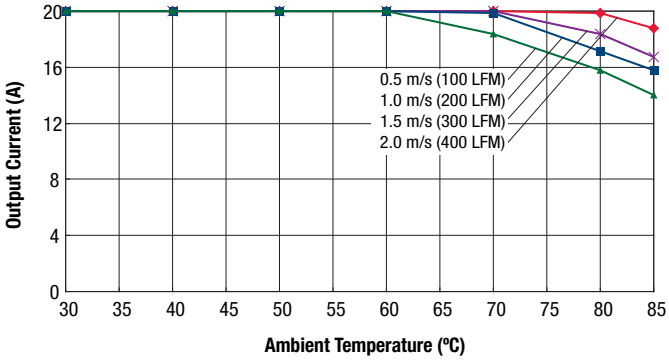

UCE-1.8/30-D48 Efficiency vs Line Voltage & Load Current @ 25ºC

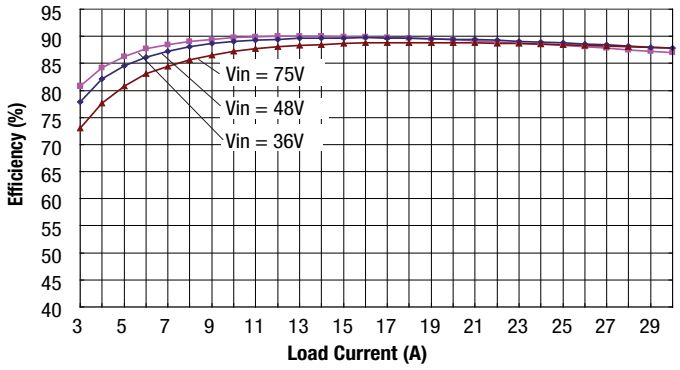

UCE-1.8/30-D48 Maximum Current Temperature Derating
(Vin = 48V, no baseplate, longitudinal airflow at sea level)

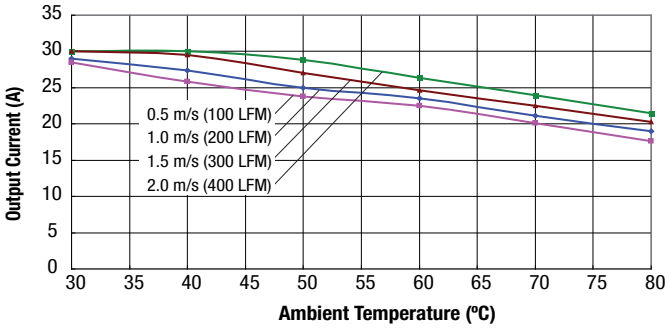

UCE-2.5/20-D48 Efficiency vs Line Voltage & Load Current @ 25ºC

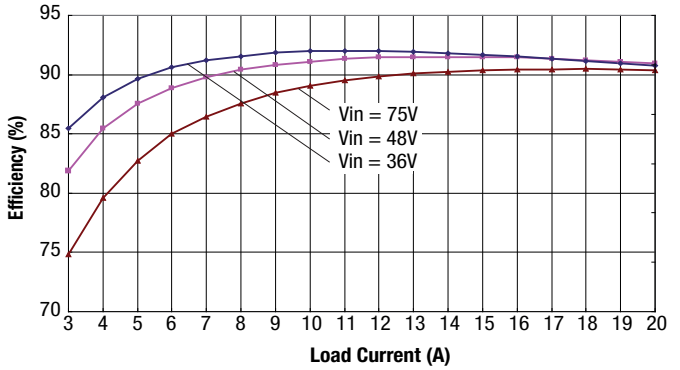

UCE-2.5/20-D48 Maximum Current Temperature Derating
(Vin = 48V, with baseplate, longitudinal airflow at sea level)

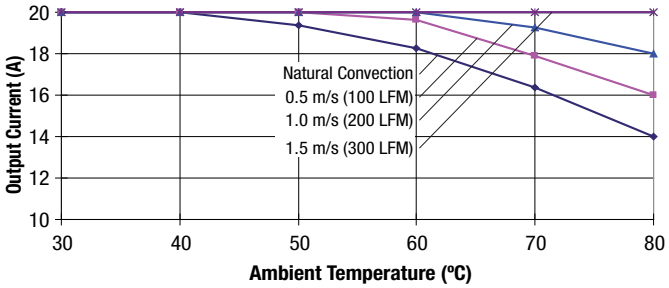

TYPICAL PERFORMANCE DATA

UCE-3.3/15-D48 Efficiency Vs. Line Voltage & Load Current @ +25ºC

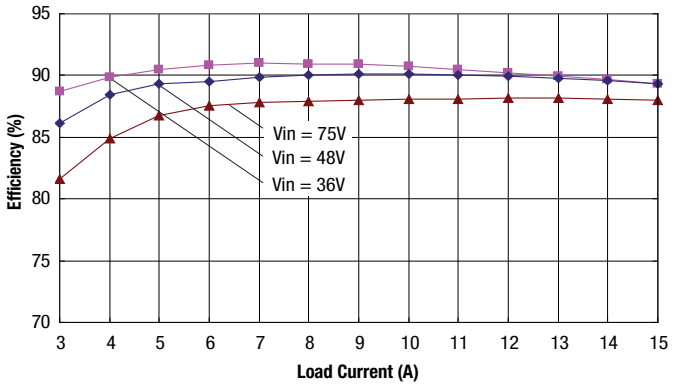

UCE-3.3/15-D48 Maximum Current Temperature Derating
(Vin = 48V, no baseplate, longitudinal airflow at sea level)

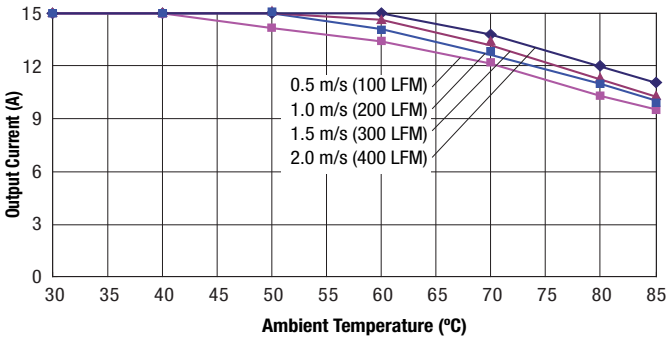

UCE-3.3/30-D48 Efficiency vs Line Voltage & Load Current @ 25ºC

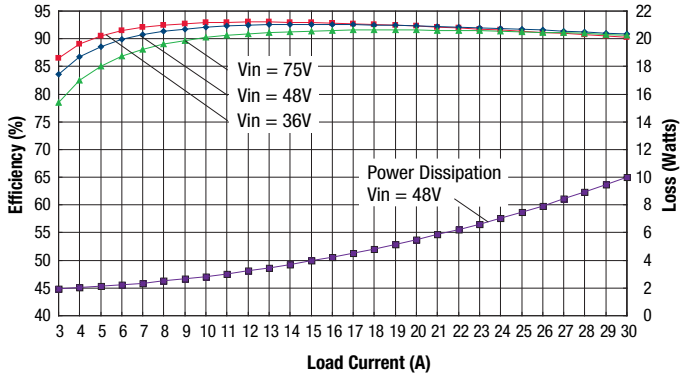

UCE-3.3/30-D48 Maximum Current Temperature Derating
(Vin=48V, no baseplate, longitudinal airflow at sea level)

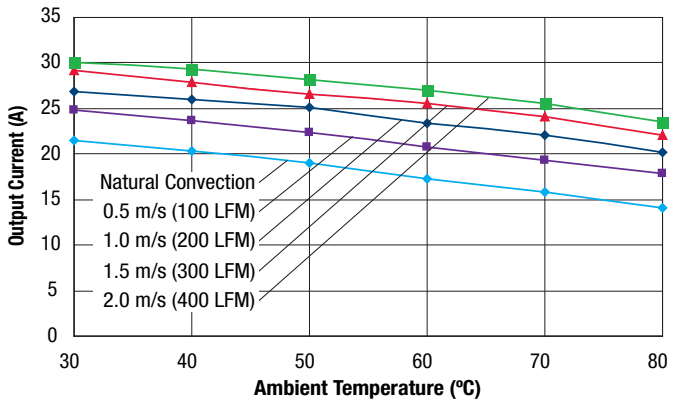

UCE-3.3/30-D48 Maximum Current Temperature Derating
(Vin=48V, no baseplate, transverse airflow at sea level)

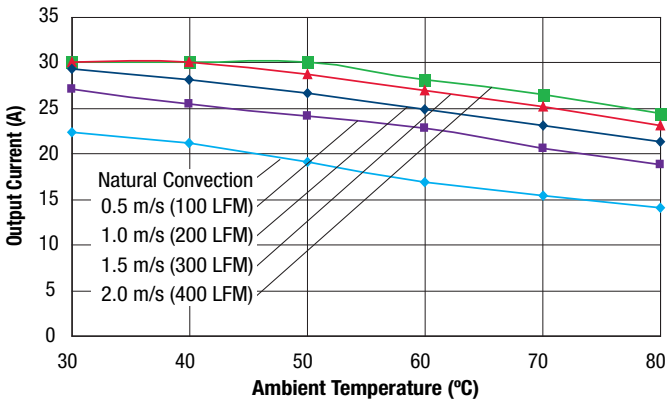

TYPICAL PERFORMANCE DATA

UCE-5/10-D48 Efficiency Vs. Line Voltage & Load Current @ +25ºC

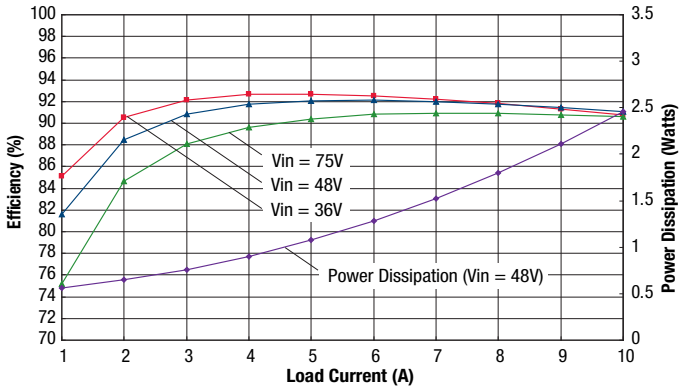

UCE-5/10-D48 Maximum Current Temperature Derating at Sea Level
(Vin = 48V, transverse airflow, no baseplate)

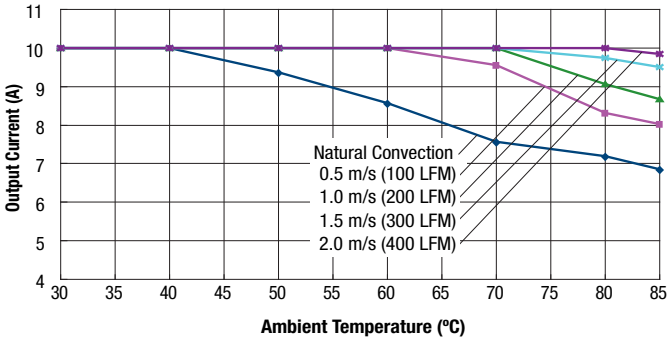

UCE-5/20-D48 Efficiency Efficiency and Power Dissipation @ Ta = +25ºC

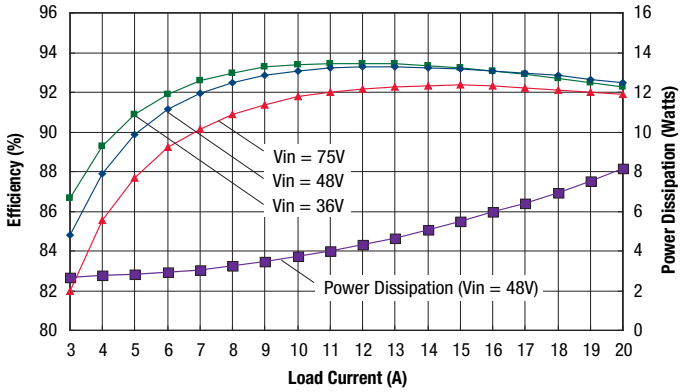

UCE-5/20-D48 Maximum Current Temperature Derating at Sea Level
(Vin = 48V, transverse airflow, no baseplate)

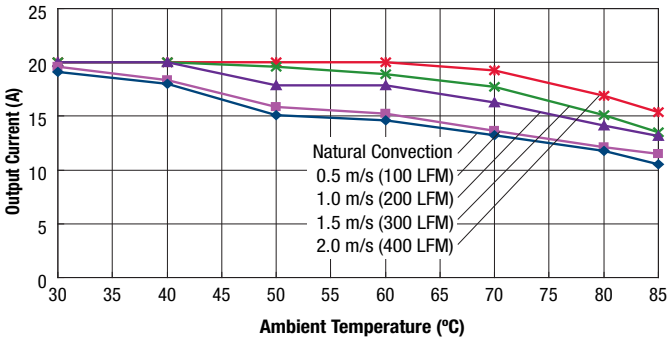

Thermal image with hot spot at full load current with 25 °C ambient; air is flowing at 100 LFM. Air is flowing across the converter from V– to V+ at 48V input. Identifiable and recommended maximum value to be verified in application.

T5 & Q7, max temp = 120 °C / IPC9592 guidelines.

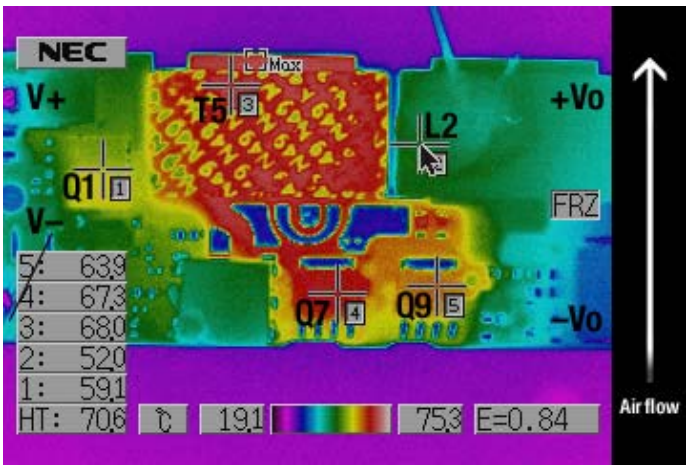

UCE-12/4.2-D48 Efficiency Vs. Line Voltage & Load Current @ +25ºC

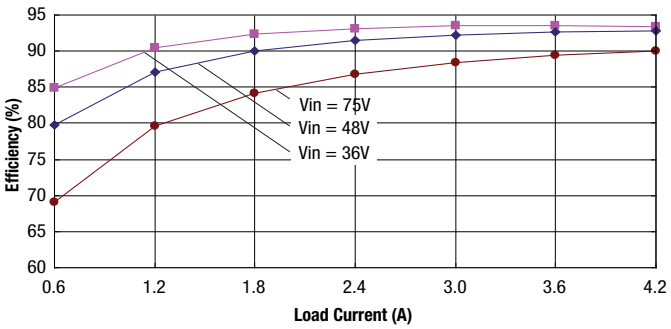

TYPICAL PERFORMANCE DATA

UCE-12/4.2-D48 Maximum Current Temperature Derating
(Vin = 48V, no baseplate, longitudinal airflow at sea level)

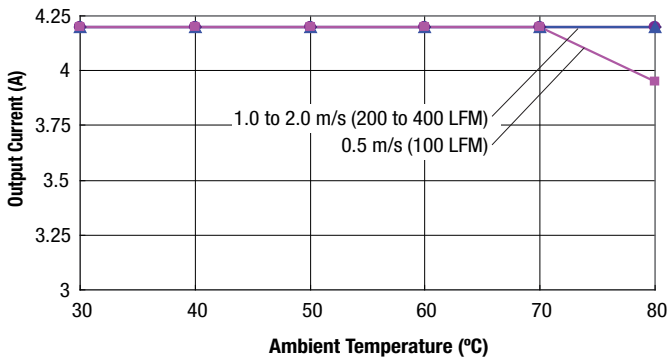

UCE-12/8.3-D48 Efficiency vs Line Voltage & Load Current @ 25ºC

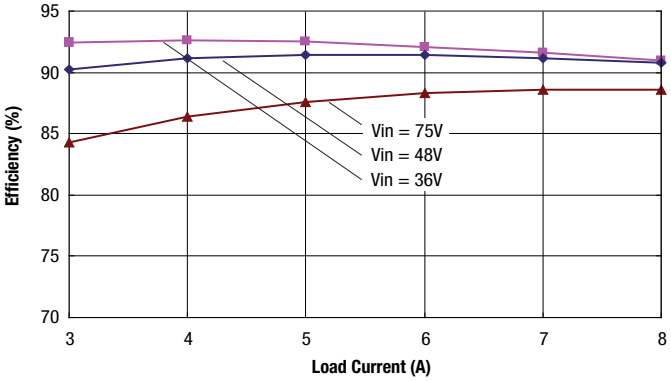

UCE-12/8.3-D48 Maximum Current Temperature Derating
(Vin = 48V, no baseplate, longitudinal airflow at sea level)

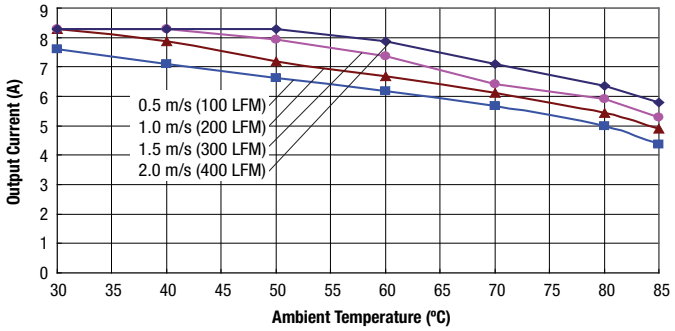

UCE-12/8.3-D48 Maximum Current Temperature Derating at sea level
(Vin = 48V, with baseplate, airflow is from -Vin to +Vin)

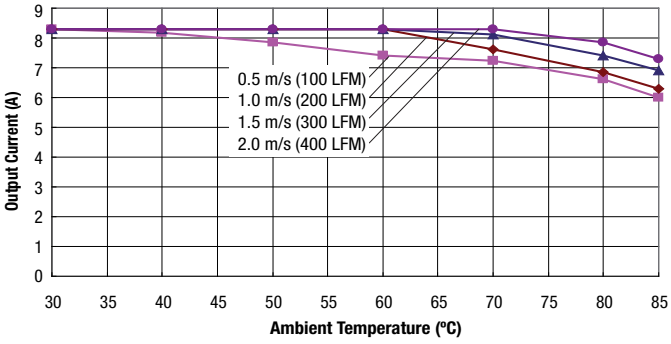

UCE-12/10-D48 Efficiency and Power Dissipation @ Ta = +25ºC

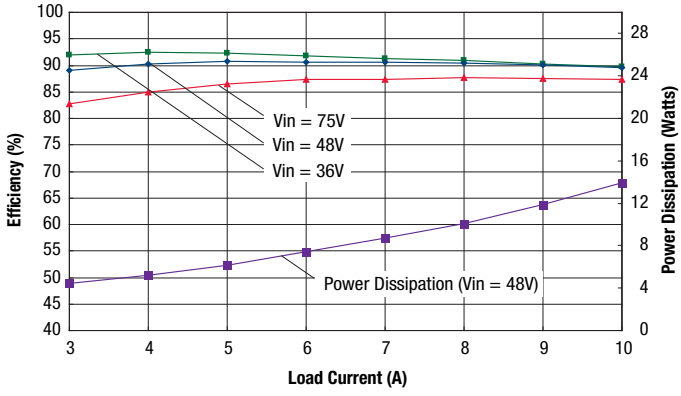

UCE-12/10-D48 Maximum Current Temperature Derating at sea level
(Vin = 48V, no baseplate, airflow direction from Vin to Vout)

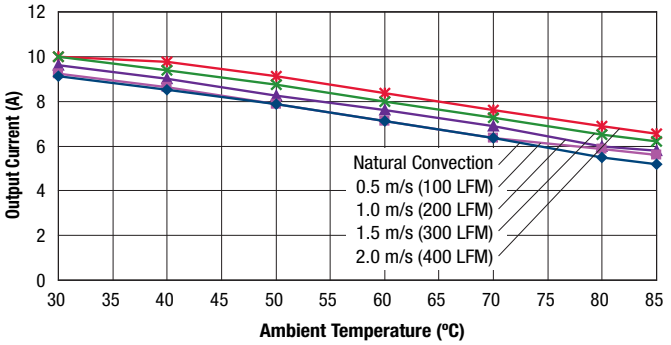

MECHANICAL SPECIFICATIONS

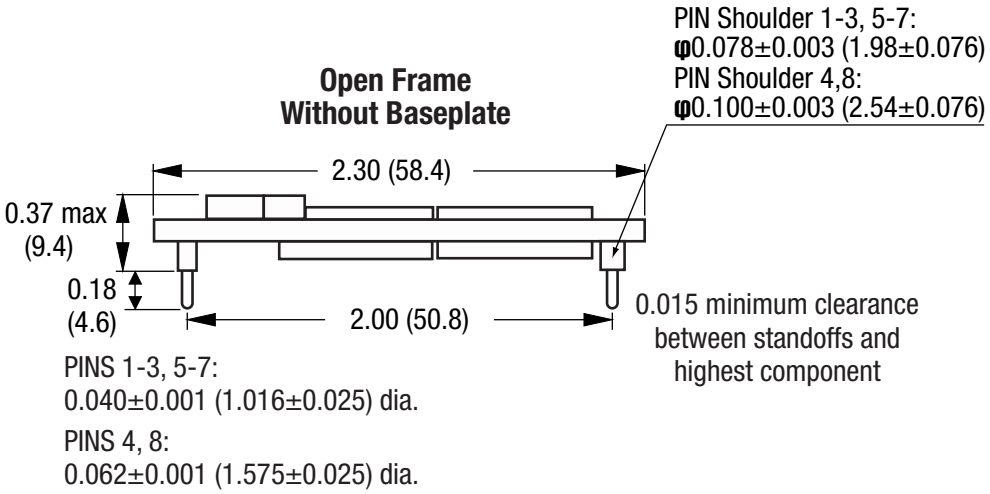

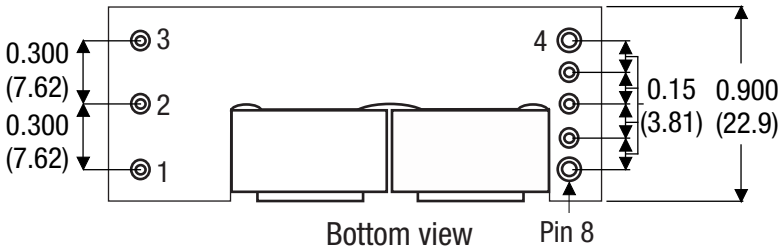

Standard pin length is shown. Please refer to the Part Number Structure for special order pin lengths.

Dimensions are in inches (mm shown for ref. only).

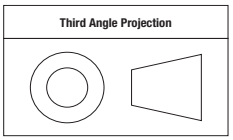

Tolerances (unless otherwise specified):
.XX ± 0.02 (0.5)
.XXX ± 0.010 (0.25)
Angles ± 2˚

Components are shown for reference only.

DOSA-Compliant INPUT/OUTPUT CONNECTIONS	
Pin	**Function P32**
1	+Vin
2	On/Off Control
3	–Vin
4	–Vout
5	–Sense
6	Trim
7	+Sense
8	+Vout

MECHANICAL SPECIFICATIONS

With Baseplate

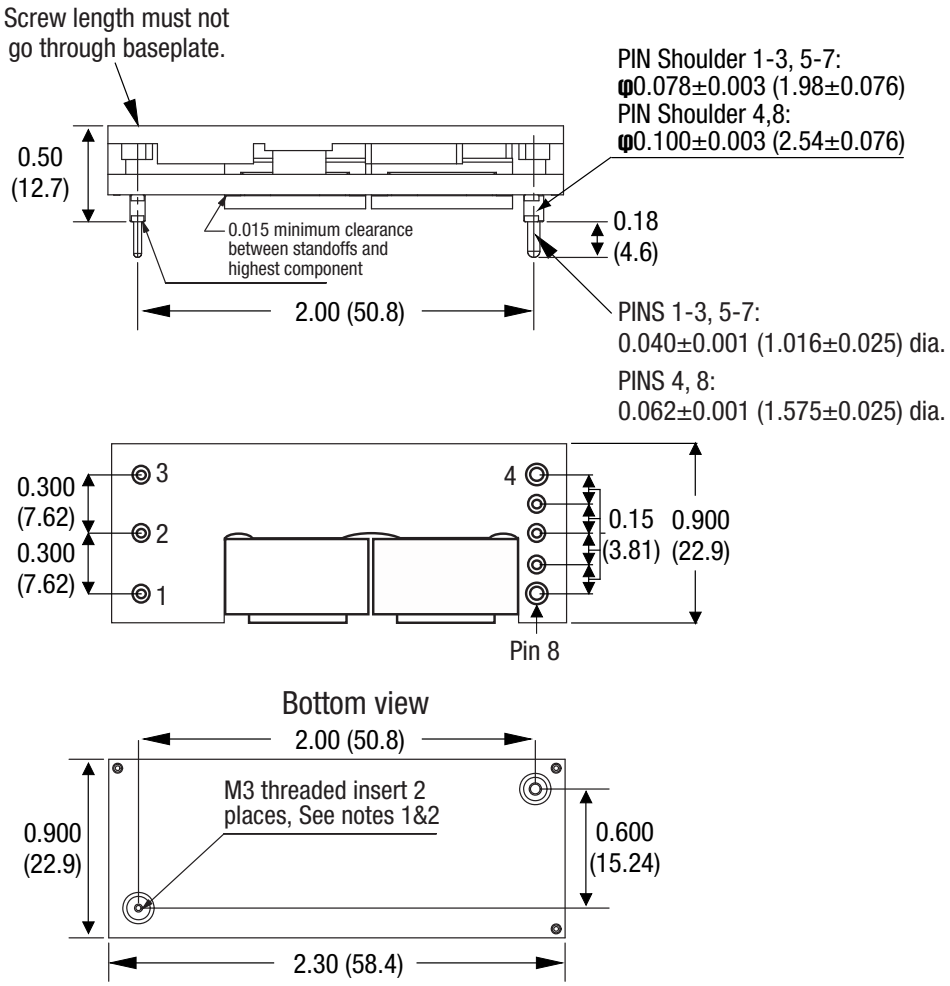

1. M3 screw used to bolt unit's baseplate to other surfaces (such as heatsink) must not exceed 0.118'' (3mm) depth below the surface of baseplate
2. Applied torque per screw should not exceed 5.3 In-lb (0.6 Nm)

Standard pin length is shown. Please refer to the Part Number Structure for special order pin lengths.

Dimensions are in inches (mm shown for ref. only).

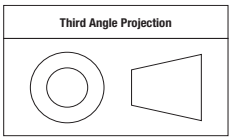

Tolerances (unless otherwise specified):
.XX ± 0.02 (0.5)
.XXX ± 0.010 (0.25)
Angles ± 2˚

Components are shown for reference only.

DOSA-Compliant INPUT/OUTPUT CONNECTIONS	
Pin	**Function P32**
1	+Vin
2	On/Off Control
3	–Vin
4	–Vout
5	–Sense
6	Trim
7	+Sense
8	+Vout

TECHNICAL NOTES

Input Fusing

Certain applications and/or safety agencies may require fuses at the inputs of power conversion components. Fuses should also be used when there is the possibility of sustained input voltage reversal which is not current-limited. For greatest safety, we recommend a fast blow fuse installed in the ungrounded input supply line with a value which is approximately twice the maximum line current, calculated at the lowest input voltage.

The installer must observe all relevant safety standards and regulations. For safety agency approvals, install the converter in compliance with the end-user safety standard.

Input Reverse-Polarity Protection

If the input voltage polarity is reversed, an internal body diode will become forward biased and likely draw excessive current from the power source. If this source is not current-limited or the circuit appropriately fused, it could cause permanent damage to the converter. **Please be sure to install a properly rated external input fuse**.

Input Under-Voltage Shutdown and Start-Up Threshold

Under normal start-up conditions, converters will not begin to regulate properly until the rising input voltage exceeds and remains at the Start-Up Threshold Voltage (see Specifications). Once operating, converters will not turn off until the input voltage drops below the Under-Voltage Shutdown Limit. Subsequent restart will not occur until the input voltage rises again above the Start-Up Threshold. This built-in hysteresis prevents any unstable on/off operation at a single input voltage.

Users should be aware however of input sources near the Under-Voltage Shutdown whose voltage decays as input current is consumed (such as capacitor inputs), the converter shuts off and then restarts as the external capacitor recharges. Such situations could oscillate. To prevent this, make sure the operating input voltage is well above the UV Shutdown voltage AT ALL TIMES.

Start-Up Delay

Assuming that the output current is set at the rated maximum, the Vin to Vout Start-Up Time (see Specifications) is the time interval between the point when the rising input voltage crosses the Start-Up Threshold and the fully loaded regulated output voltage enters and remains within its specified regulation band. Actual measured times will vary with input source impedance, external input capacitance, input voltage slew rate and final value of the input voltage as it appears at the converter.

These converters include a soft start circuit to moderate the duty cycle of the PWM controller at power up, thereby limiting the input inrush current.

The On/Off Remote Control interval from inception to Vout regulated assumes that the converter already has its input voltage stabilized above the Start-Up Threshold before the On command. The interval is measured from the On command until the output enters and remains within its specified regulation band. The specification assumes that the output is fully loaded at maximum rated current.

Input Source Impedance

These converters will operate to specifications without external components, assuming that the source voltage has very low impedance and reasonable input voltage regulation. Since real-world voltage sources have finite impedance, performance is improved by adding external filter components. Sometimes only a small ceramic capacitor is sufficient. Since it is difficult to totally characterize all applications, some experimentation may be needed. Note that external input capacitors must accept high speed switching currents.

Because of the switching nature of DC-DC converters, the input of these converters must be driven from a source with both low AC impedance and adequate DC input regulation. Performance will degrade with increasing input inductance. Excessive input inductance may inhibit operation. The DC input regulation specifies that the input voltage, once operating, must never degrade below the Shut-Down Threshold under all load conditions. Be sure to use adequate trace sizes and mount components close to the converter.

I/O Filtering, Input Ripple Current and Output Noise

All models in this converter series are tested and specified for input reflected ripple current and output noise using designated external input/output components, circuits and layout as shown in the figures below. External input capacitors (Cin in the figure) serve primarily as energy storage elements, minimizing line voltage variations caused by transient IR drops in the input conductors. Users should select input capacitors for bulk capacitance (at appropriate frequencies), low ESR and high RMS ripple current ratings. In the figure below, the Cbus and Lbus components simulate a typical DC voltage bus. Your specific system configuration may require additional considerations. Please note that the values of Cin, Lbus and Cbus will vary according to the specific converter model.

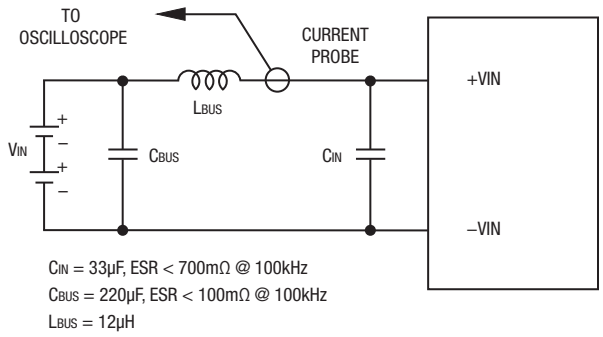

Figure 2. Measuring Input Ripple Current

In critical applications, output ripple and noise (also referred to as periodic and random deviations or PARD) may be reduced by adding filter elements such as multiple external capacitors. Be sure to calculate component temperature rise from reflected AC current dissipated inside capacitor ESR.

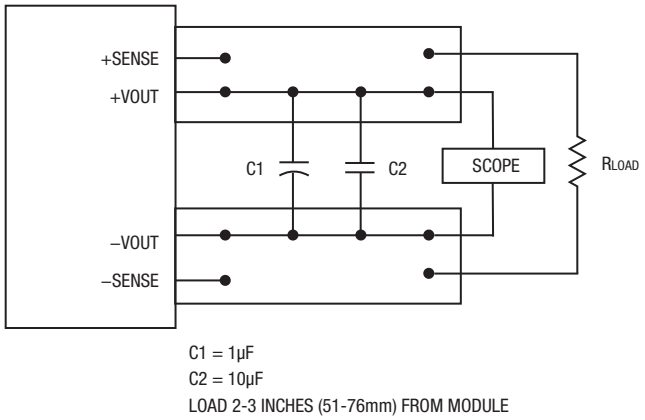

Figure 3. Measuring Output Ripple and Noise (PARD)

Floating Outputs

Since these are isolated DC-DC converters, their outputs are "floating" with respect to their input. The essential feature of such isolation is ideal ZERO CURRENT FLOW between input and output. Real-world converters however do exhibit tiny leakage currents between input and output (see Specifications). These leakages consist of both an AC stray capacitance coupling component and a DC leakage resistance. When using the isolation feature, do not allow the isolation voltage to exceed specifications. Otherwise the converter may be damaged. Designers will normally use the negative output (-Output) as the ground return of the load circuit. You can however use the positive output (+Output) as the ground return to effectively reverse the output polarity.

Minimum Output Loading Requirements

All models regulate within specification and are stable under no load to full load conditions. Operation under no load might however slightly increase output ripple and noise.

Thermal Shutdown

To protect against thermal overstress, these converters include thermal shutdown circuitry. If environmental conditions cause the temperature of the DC-DC's to rise above the Operating Temperature Range up to the shutdown temperature, an on-board electronic temperature sensor will power down the unit. When the temperature decreases below the turn-on threshold, the converter will automatically restart. There is a small amount of hysteresis to prevent rapid on/off cycling. The temperature sensor is typically located adjacent to the switching controller, approximately in the center of the unit. See the Performance and Functional Specifications.

CAUTION: If you operate too close to the thermal limits, the converter may shut down suddenly without warning. Be sure to thoroughly test your application to avoid unplanned thermal shutdown.

Temperature Derating Curves

The graphs in this data sheet illustrate typical operation under a variety of conditions. The Derating curves show the maximum continuous ambient air temperature and decreasing maximum output current which is acceptable under increasing forced airflow measured in Linear Feet per Minute ("LFM"). Note that these are AVERAGE measurements. The converter will accept brief increases in current or reduced airflow as long as the average is not exceeded.

Note that the temperatures are of the ambient airflow, not the converter itself which is obviously running at higher temperature than the outside air. Also note that very low flow rates (below about 25 LFM) are similar to "natural convection," that is, not using fan-forced airflow.

Murata Power Solutions makes Characterization measurements in a closed cycle wind tunnel with calibrated airflow. We use both thermocouples and an infrared camera system to observe thermal performance. As a practical matter, it is quite difficult to insert an anemometer to precisely measure airflow in most applications. Sometimes it is possible to estimate the effective airflow if you thoroughly understand the enclosure geometry, entry/exit orifice areas and the fan flowrate specifications.

CAUTION: If you exceed these Derating guidelines, the converter may have an unplanned Over Temperature shut down. Also, these graphs are all collected near Sea Level altitude. Be sure to reduce the derating for higher altitude.

Output Overvoltage Protection (OVP)

This converter monitors its output voltage for an over-voltage condition. If the output exceeds OVP limits, the sensing circuit will power down the unit, and the output voltage will decrease. After a time-out period, the PWM will automatically attempt to restart, causing the output voltage to ramp up to its rated value. It is not necessary to power down and reset the converter for the automatic OVP-recovery restart.

If the fault condition persists and the output voltage climbs to excessive levels, the OVP circuitry will initiate another shutdown cycle. This on/off cycling is referred to as "hiccup" mode.

Output Fusing

The converter is extensively protected against current, voltage and temperature extremes. However your application circuit may need additional protection. In the extremely unlikely event of output circuit failure, excessive voltage could be applied to your circuit. Consider using appropriate external protection.

Output Current Limiting

As soon as the output current increases to approximately 125% to 150% of its maximum rated value, the DC-DC converter will enter a current-limiting mode. The output voltage will decrease proportionally with increases in output current, thereby maintaining a somewhat constant power output. This is also commonly referred to as power limiting.

Current limiting inception is defined as the point at which full power falls below the rated tolerance. See the Performance/Functional Specifications. Note particularly that the output current may briefly rise above its rated value in normal operation as long as the average output power is not exceeded. This enhances reliability and continued operation of your application. If the output current is too high, the converter will enter the short circuit condition.

Output Short Circuit Condition

When a converter is in current-limit mode, the output voltage will drop as the output current demand increases. If the output voltage drops too low (approximately 98% of nominal output voltage for most models), the magnetically coupled voltage used to develop the PWM bias voltage will also drop, thereby shutting down the PWM controller. Following a time-out period, the PWM will restart, causing the output voltage to begin rising to its appropriate value.

If the short-circuit condition persists, another shutdown cycle will initiate. This rapid on/off cycling is called "hiccup mode." The hiccup cycling reduces the average output current, thereby preventing excessive internal temperatures and/or component damage.

The "hiccup" system differs from older latching short circuit systems because you do not have to power down the converter to make it restart. The system will automatically restore operation as soon as the short circuit condition is removed.

Remote Sense Input

Use the Sense inputs with caution. Sense is normally connected ***at the load***. Sense inputs compensate for output voltage inaccuracy delivered at the load. This is done by correcting IR voltage drops along the output wiring and the current carrying capacity of PC board etch. This output drop (the difference between Sense and Vout when measured at the converter) should not exceed 0.5V. Consider using heavier wire if this drop is excessive. Sense inputs also improve the stability of the converter and load system by optimizing the control loop phase margin.

Note: The Sense input and power Vout lines are internally connected through low value resistors to their respective polarities so that the converter can operate without external connection to the Sense. Nevertheless, if the Sense function is not used for remote regulation, the user should connect +Sense to +Vout and –Sense to –Vout at the converter pins.

The remote Sense lines carry very little current. They are also capacitively coupled to the output lines and therefore are in the feedback control loop to regulate and stabilize the output. As such, they are not low impedance inputs and must be treated with care in PC board layouts. Sense lines on the PCB should run adjacent to DC signals, preferably Ground. In cables and discrete wiring, use twisted pair, shielded tubing or similar techniques.

Any long, distributed wiring and/or significant inductance introduced into the Sense control loop can adversely affect overall system stability. If in doubt, test your applications by observing the converter's output transient response during step loads. There should not be any appreciable ringing or oscillation. You may also adjust the output trim slightly to compensate for voltage loss in any external filter elements. Do not exceed maximum power ratings.

Please observe Sense inputs tolerance to avoid improper operation:

[Vout(+) –Vout(-)] – [Sense(+) –Sense(-)] ≤ 10% of Vout

Output overvoltage protection is monitored at the output voltage pin, not the Sense pin. Therefore excessive voltage differences between Vout and Sense together with trim adjustment of the output can cause the overvoltage protection circuit to activate and shut down the output.

Power derating of the converter is based on the combination of maximum output current and the highest output voltage. Therefore the designer must ensure:

(Vout at pins) x (Iout) ≤ (Max. rated output power)

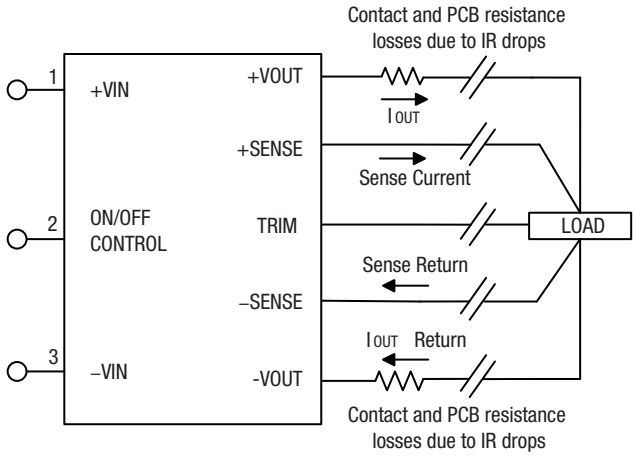

Figure 4. Remote Sense Circuit Configuration

Trimming the Output Voltage

The Trim input to the converter allows the user to adjust the output voltage over the rated trim range (please refer to the Specifications). In the trim equations and circuit diagrams that follow, trim adjustments use either a trimpot or a single fixed resistor connected between the Trim input and either the +Sense or –Sense terminals. (On some converters, an external user-supplied precision DC voltage may also be used for trimming). Trimming resistors should have a low temperature coefficient (±100 ppm/deg.C or less) and be mounted close to the converter. Keep leads short. If the trim function is not used, leave the trim unconnected. With no trim, the converter will exhibit its specified output voltage accuracy.

There are two CAUTIONs to observe for the Trim input:

CAUTION: To avoid unplanned power down cycles, do not exceed EITHER the maximum output voltage OR the maximum output power when setting the trim. Be particularly careful with a trimpot. If the output voltage is excessive, the OVP circuit may inadvertantly shut down the converter. If the maximum power is exceeded, the converter may enter current limiting. If the power is exceeded for an extended period, the converter may overheat and encounter overtemperature shut down.

CAUTION: Be careful of external electrical noise. The Trim input is a senstive input to the converter's feedback control loop. Excessive electrical noise may cause instability or oscillation. Keep external connections short to the Trim input. Use shielding if needed.

Trimming by Using an External Voltage Source

1. The easiest way to trim the output using an external voltage source is to drive the Trim pin directly from a variable source. The following equation can be used to calculate the voltage at the Trim pin.

$$Vtrim = 2 \times 1.225 \times \frac{Vo}{Vonominal} - 1.225$$

Vo is the output voltage you want; Vonominal is the nominal output voltage; Vtrim is the voltage that should appear at the trim pin.

2. If the purpose of trimming is to compensate voltage drop of power path from converter to the Load, you may separately connect the sense pin directly to the load. It's much easier than real time adjusting trim voltage.

3. CAUTION: To avoid unplanned power down cycles, do not exceed EITHER the maximum output voltage OR the maximum output power when setting the trim. If the output voltage is excessive, the OVP circuit may shut down the converter. If the maximum power is exceeded, the converter may enter current limiting. If the power is exceeded for an extended period, the converter may overheat and encounter overtemperature shut down. Be careful of external electrical noise. The Trim input is a sensitive input to the converter's feedback control loop. Excessive electrical noise may cause instability or oscillation.

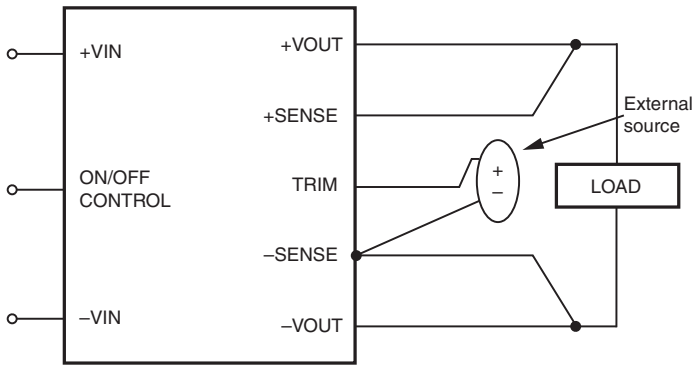

Figure 5. Trimming with an external source

Trim Equations

Trim Down
Connect trim resistor between trim pin and –Sense

$$R_{TrimDn}\ (k\,\Omega) = \frac{5.11}{\Delta} - 10.22$$

Trim Up
Connect trim resistor between trim pin and +Sense

$$R_{TrimUp}\ (k\,\Omega) = \frac{5.11 \times V_{NOM} \times (1+\Delta)}{1.225 \times \Delta} - \frac{5.11}{\Delta} - 10.22$$

Where,

$\Delta = | (V_{NOM} - V_{OUT}) / V_{NOM} |$

V_{NOM} is the nominal, untrimmed output voltage.

V_{OUT} is the desired new output voltage.

Do not exceed the specified trim range or maximum power ratings when adjusting trim.
Use 1% precision resistors mounted close to the converter on short leads.

Trim Circuits

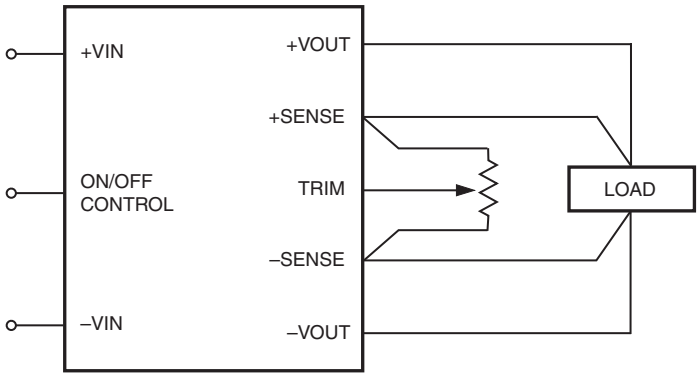

Figure 6. Trim Connections Using A Trimpot

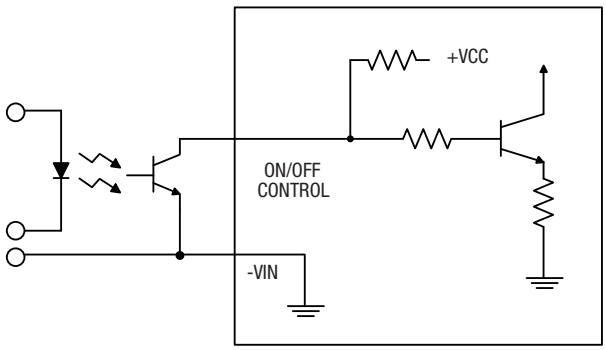

Figure 8. Driving the On/Off Control Pin (suggested circuit)

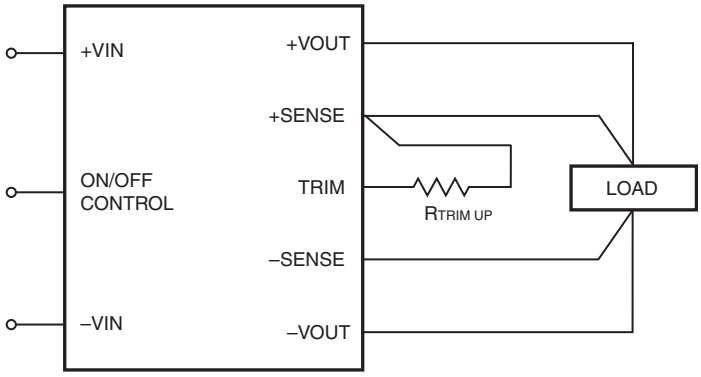

Figure 7. Trim Connections To Increase Output Voltages

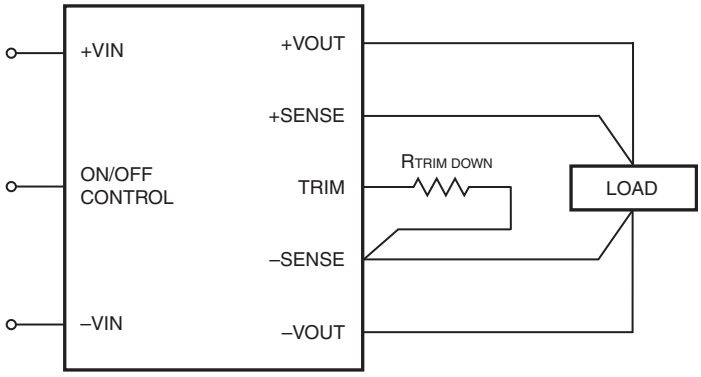

Figure 9. Trim Connections To Decrease Output Voltages

Connect sense to its respective V_{OUT} pin if sense is not used with a remote load.

Remote On/Off Control

On the input side, a remote On/Off Control can be specified with either positive or negative logic logic.

Positive: Models equipped with positive logic are enabled when the On/Off pin is left open or is pulled high to +Vin with respect to –Vin. An internal bias current causes the open pin to rise to approximately +15V. Some models will also turn on at lower intermediate voltages (see Specifications). Positive-logic devices are disabled when the On/Off is grounded or brought to within a low voltage (see Specifications) with respect to –Vin.

Negative: Models with negative logic are on (enabled) when the On/Off is grounded or brought to within a low voltage (see Specifications) with respect to –Vin. The device is off (disabled) when the On/Off is left open or is pulled high to approximately +15V with respect to –Vin.

Dynamic control of the On/Off function should be able to sink the specified signal current when brought low and withstand appropriate voltage when brought high. Be aware too that there is a finite time in milliseconds (see Specifications) between the time of On/Off Control activation and stable, regulated output. This time will vary slightly with output load type and current and input conditions.

There are two CAUTIONs for the On/Off Control:

CAUTION: While it is possible to control the On/Off with external logic if you carefully observe the voltage levels, the preferred circuit is either an open drain/open collector transistor, a switch or a relay (which can thereupon be controlled by logic) returned to negative Vin.

CAUTION: Do not apply voltages to the On/Off pin when there is no input power voltage. Otherwise the converter may be permanently damaged.

Output Capacitive Load

These converters do not require external capacitance added to achieve rated specifications. Users should only consider adding capacitance to reduce switching noise and/or to handle spike current step loads. Install only enough capacitance to achieve noise objectives. Excess external capacitance may cause regulation problems, slower transient response and possible instability. Proper wiring of the Sense inputs will improve these factors under capacitive load.

The maximum rated output capacitance and ESR specification is given for a capacitor installed immediately adjacent to the converter. Any extended output wiring or smaller wire gauge or less ground plane may tolerate somewhat higher capacitance. Also, capacitors with higher ESR may use a larger capacitance.

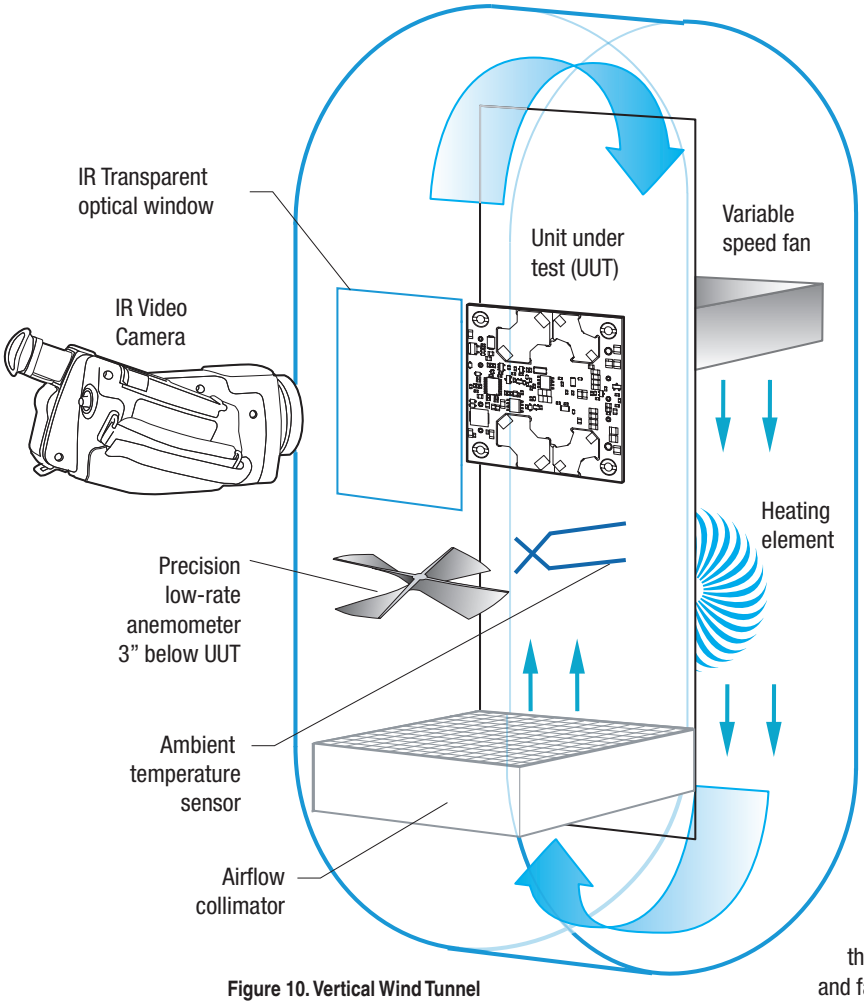

Figure 10. Vertical Wind Tunnel

Vertical Wind Tunnel

Murata Power Solutions employs a computer controlled custom-designed closed loop vertical wind tunnel, infrared video camera system, and test instrumentation for accurate airflow and heat dissipation analysis of power products. The system includes a precision low flow-rate anemometer, variable speed fan, power supply input and load controls, temperature gauges, and adjustable heating element.

The IR camera monitors the thermal performance of the Unit Under Test (UUT) under static steady-state conditions. A special optical port is used which is transparent to infrared wavelengths.

Both through-hole and surface mount converters are soldered down to a 10"x 10" host carrier board for realistic heat absorption and spreading. Both longitudinal and transverse airflow studies are possible by rotation of this carrier board since there are often significant differences in the heat dissipation in the two airflow directions. The combination of adjustable airflow, adjustable ambient heat, and adjustable Input/Output currents and voltages mean that a very wide range of measurement conditions can be studied.

The collimator reduces the amount of turbulence adjacent to the UUT by minimizing airflow turbulence. Such turbulence influences the effective heat transfer characteristics and gives false readings. Excess turbulence removes more heat from some surfaces and less heat from others, possibly causing uneven overheating.

Both sides of the UUT are studied since there are different thermal gradients on each side. The adjustable heating element and fan, built-in temperature gauges, and no-contact IR camera mean that power supplies are tested in real-world conditions.

Murata Power Solutions, Inc. makes no representation that the use of its products in the circuits described herein, or the use of other technical information contained herein, will not infringe upon existing or future patent rights. The descriptions contained herein do not imply the granting of licenses to make, use, or sell equipment constructed in accordance therewith. Specifications are subject to change without notice.
©2018 Murata Power Solutions, Inc.