UWR-96/100-D48A

9.6 Watt, Single Output, DC/DC Converters



FEATURES

- Wide 36-75V input range
- Fixed 96V, 100mA output
- Synchronous rectifier topology
- Efficiency to 89%
- –40 to +60°C ambient with no Derating
- Isolated to 1500 Volts
- Extensive current, voltage and temperature self-protection
- Standard 1" x 2" x 0.4" package and pinouts

PRODUCT OVERVIEW

In Murata Power Solutions' flagship 7-15 Watt 1″ x 2″ high reliability A-series, the new UWR-96/100-D48A DC/DC power converter offers a 96Vdc output from 48V input with very high efficiency (to 89%) and thermal performance. Natural convection operation is available up to +60°C and only a moderate forced 200 LFM airflow will deliver full rated power of 9.6 Watts up to +100°C.

Input voltages may be accepted from +36 to +75 Volts DC using +48 Volts DC as nominal. The output is +96 Volts DC at 100mA max. regulated to within ±0.5%. The UWR-96/100-D48A includes functional isolation between input and output of 1500 Volts DC, minimum, continuous rating.

Other outstanding features include 350mV peak-to-peak wideband output noise and only 15mA no-load input current. The design includes extensive self protection and protection for external circuits. Electromagnetic interference compliance is achieved with an efficient, low-noise design rather than through expensive metal shielding.

The UWR-96/100-D48A combines a high-frequency, high efficiency synchronous-rectifier topology with advanced components and fully-automated surface mount construction. Contemporary engineering design and state-of-the art manufacturing are complemented by Murata Power Solutions' extensive computer-aided automatic test, vendor quality programs, life and stress certification and component screening systems.

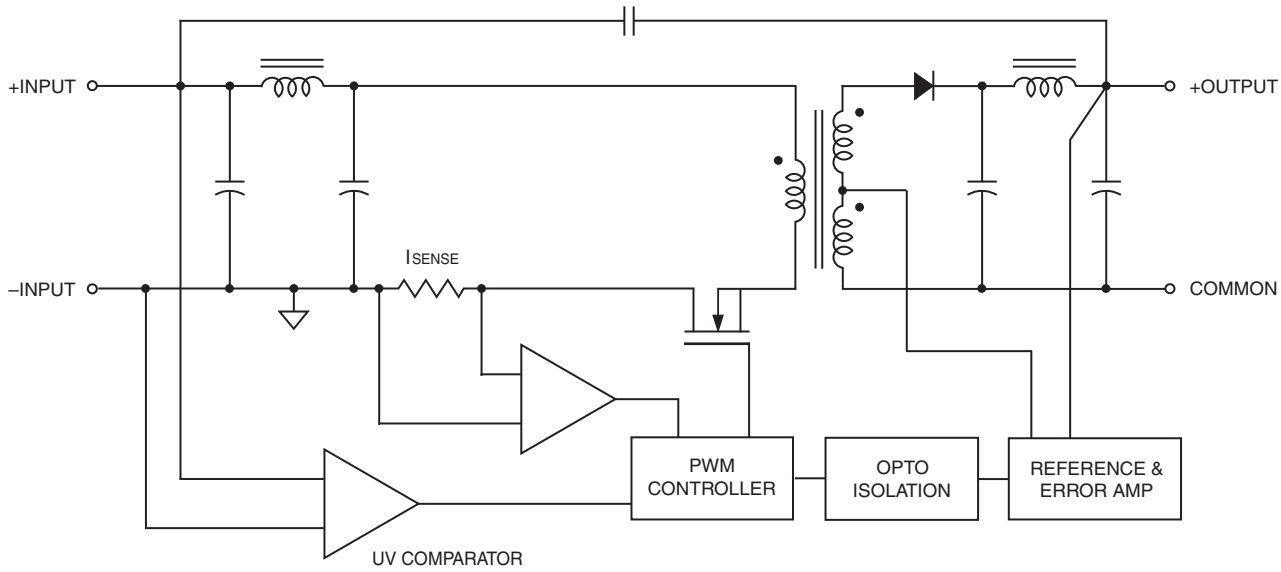

Figure 1. Simplified Schematic

Typical topology is shown

RoHS COMPLIANT

For full details go to www.murata-ps.com/rohs

Performance Specifications and Ordering Guide ①

Model	Output							Input			Efficiency		Package (Case/ Pinout)
	V_{OUT} (Volts)	I_{OUT} (mA)	Power (Watts)	R/N (mVp-p) ②		Regulation ⑩		V_{IN} Nom. (Volts)	Range (Volts)	I_{IN} * (mA)	Min.	Typ.	
				Typ.	Max.	Line	Load						
UWR-96/100-D48A	96	100	9.6	350	700	±0.5%	±0.5%	48	36-75	15/220	85%	88%	C65, P88

* Nominal line voltage, no load/full load conditions.

PART NUMBER STRUCTURE

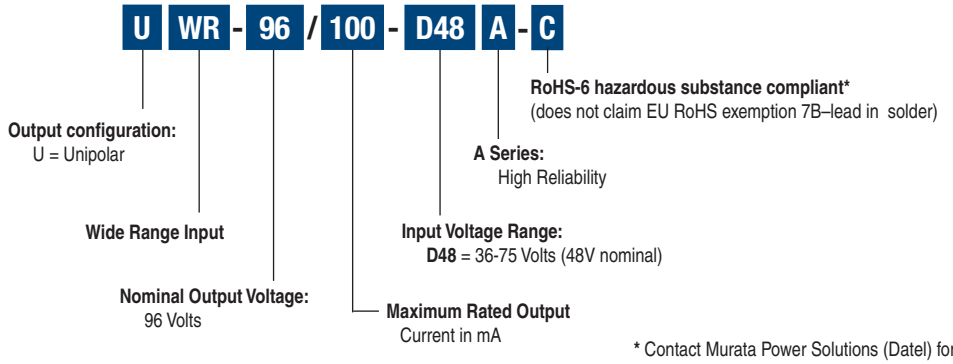

* Contact Murata Power Solutions (Datel) for availability.

MECHANICAL SPECIFICATIONS

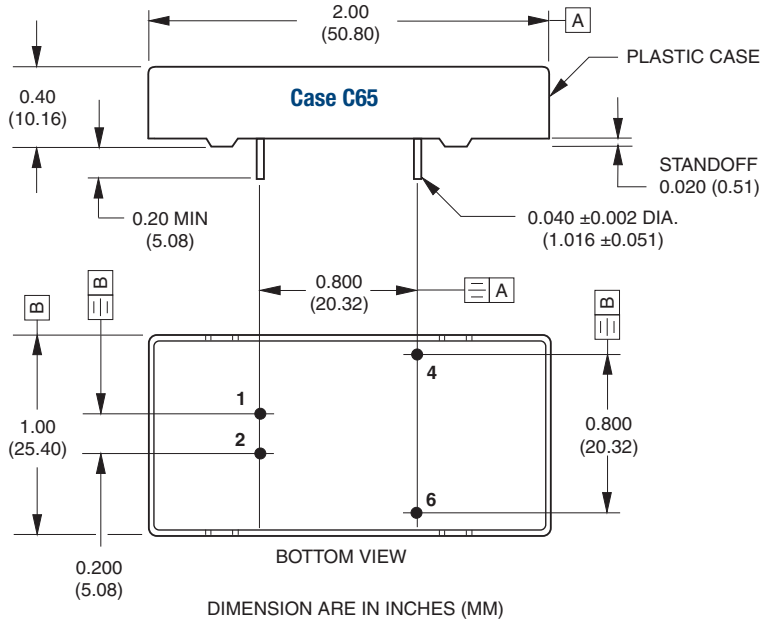

DIMENSION ARE IN INCHES (MM)

Dimensions are in inches (mm shown for ref. only).

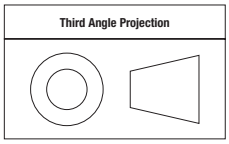

Tolerances (unless otherwise specified):
.XX ± 0.02 (0.5)
.XXX ± 0.010 (0.25)
Angles ± 2˚

Components are shown for reference only.

I/O Connections	
Pin	Function P88
1	+Vin
2	–Vin
3	No Pin
4	+Vout
5	No Pin
6	–Vout

The pin length of standard units is shown.

Performance/Functional Specifications (1)

Input	
Input Voltage Range	36 to 75 Volts
Nominal Input Voltage	48 Volts
Start-Up Threshold	34.5 Volts
Undervoltage Shutdown	34 Volts
Overvoltage Shutdown	None
Internal Input Filter Type	L-C
Reverse Polarity Protection	None, install external fuse
Input Current:	
Full Load Conditions	220mA
Inrush Transient	50A²sec
Shutdown Mode (Off, UV, OT)	TBD
Output Short Circuit	40mA
No Load	15mA
Low Line (Vin=Vmin.)	300mA
Reflected (Back) Ripple Current (2)	TBD

Output	
Output Voltage	96 Volts DC
Output Power	9.7 Watts max.
Minimum Loading (8)	
Resistive	No minimum resistive load
Capacitive	2.2µF min., 150 Volts
Maximum Capacitive Loading	47µF, 150 Volts
Accuracy (50% load)	±1 % of Vnominal
Output Trim	None. Unit is pre-trimmed.
Temperature Coefficient	±0.02% of VOUT range per °C
Ripple/Noise (20 MHz bandwidth)	See Ordering Guide
Line/Load Regulation	See Ordering Guide (10)
Efficiency	See Ordering Guide
Isolation	
Isolation Voltage, Input to Output	1500Vdc, min., continuous
Safety Rating	Functional isolation
Isolation Resistance	100MΩ
Isolation Capacitance	1000 pF
Current Limit Inception (98% of VOUT)	
Cold start	145mA
After warm up	135mA
Short Circuit Mode (6)	
Short Circuit Current Output	150mA
Protection Method	Hiccup autorecovery upon overload removal (5)
Short Circuit Duration	Continuous, no damage (output shorted to ground)

Dynamic Characteristics	
Dynamic Load Response (50-75-50% load step)	250µsec to ±2% of final value
Start-Up Time (VIN on to VOUT regulated)	20msec for VOUT = nominal
Switching Frequency	280 ±20kHz

Environmental	
Calculated MTBF (4)	TBD
Operating Temperature Range (Ambient)	
No derating, natural convection, vertical mount	–40 to +60°C (9)
With derating	See Derating Curves
Operating Case Temperature	–40 to +100°C max. (7)
Storage Temperature Range	–55 to +125°C
Thermal Protection/Shutdown	NA
Relative Humidity	To 85% / 85°C

Physical	
Outline Dimensions	See Mechanical Specifications
Case Material	Black diallyl phthalate plastic, UL94V-0 rated
Pin Diameter	0.04 inches (1.01 mm)
Pin Material	Gold-plated copper alloy
Weight	0.7 ounces (20 grams)
Electromagnetic Interference	EN55022/CISPR22 (requires external filter)

Performance/Functional Specification Notes:

(1) Specifications are typical at +25°C, VIN = nominal, VOUT = nominal, full load, external cap and natural convection unless otherwise indicated. "Nominal" input voltage is +48V.
All models are tested and specified with an external 47µF low ESR electrolytic output capacitor. This capacitor is necessary to accommodate our test equipment and may not be required to achieve specified performance in your applications. All models are stable and regulate within spec with no resistive loads.

(2) Input Back Ripple Current is tested and specified over a 5Hz to 20MHz bandwidth. Input filtering is CBUS (source) = 220µF tantalum (100V), LBUS IN = 12µH, CIN (at converter) = 22µF electrolytic.

(3) Note that Maximum Power Derating curves indicate an average current at nominal input voltage. At higher temperatures and/or lower airflow, the DC/DC converter will tolerate brief full current outputs if the total RMS current over time does not exceed the Derating curve.

(4) Mean Time Before Failure is calculated using the Telcordia (Belcore) SR-332 Method 1, Case 3, ground fixed conditions, TPCBOARD = +25°C, full output load, natural air convection.

(5) After short circuit shutdown, if the load is partially removed such that the load still exceeds the overcurrent (OC) detection, the converter will remain in hiccup restart mode.

(6) Short circuit shutdown begins when the output voltage degrades approximately 2% from the selected setting.

(7) Maximum PC board temperature is measured with the sensor in the center.

(8) A minimum 2.2µF external capacitive load is REQUIRED for stable operation. Use low-ESR aluminum electrolytic capacitors with 150 Volt or greater rating. Use short leads and mount the capacitor close to the converter. Murata Power Solutions uses a 47µF cap for some testing. Greater capacitance reduces noise but also slows dynamic response time.

(9) All models are fully operational and meet published specifications, including "cold start" at –40°C.

(10) Regulation specifications describe the deviation as the line input voltage or output load current is varied from a nominal midpoint value to either extreme.

(11) Other input or output voltage ranges are available under scheduled quantity special order.

(12) The Isolation voltage rating is a "minimum maximum." Murata Power Solutions guarantees performance up to 1500Vdc (minimum) continuous rating with no damage. However, this is the maximum isolation voltage which should be applied.

Absolute Maximum Ratings

Input Voltage (Continuous	+75 Volts
Transient (100 mSec.)	+100 Volts
Input Reverse Polarity Protection	None, install external fuse
Isolation Voltage	1500Vdc, continuous min. (12)
Output Overvoltage	Do not apply reverse output current
Output Current	Current-limited. Devices can withstand sustained short circuit without damage.
Storage Temperature	–55 to +125°C
Lead Temperature (soldering 10sec max.)	+280°C

Absolute maximums are stress ratings. Exposure of devices to greater than any of these conditions may adversely affect long-term reliability. Proper operation under conditions other than those listed in the Performance/Functional Specifications Table is not implied nor recommended.

Product Adaptations

Murata Power Solutions offers variations of our core product family. These products are available under scheduled quantity orders and may also include separate manufacturing documentation from a mutually-agreeable Product Specification. Since these product adaptations largely share a common parts list, similar specifications and test methods with their root products, they are provided at excellent costs and delivery. Please contact MPS for details.

As of this date, the following product is available:
UWR-96/100-D48AHL2-Y
This model includes conformal coating added, 3.68mm pin length, and RoHS-5 hazardous substance compliance (with lead).

Murata Power Solutions, Inc.
11 Cabot Boulevard, Mansfield, MA 02048-1151 U.S.A.
ISO 9001 and 14001 REGISTERED

This product is subject to the following operating requirements and the Life and Safety Critical Application Sales Policy:
Refer to: http://www.murata-ps.com/requirements/

Murata Power Solutions, Inc. makes no representation that the use of its products in the circuits described herein, or the use of other technical information contained herein, will not infringe upon existing or future patent rights. The descriptions contained herein do not imply the granting of licenses to make, use, or sell equipment constructed in accordance therewith. Specifications are subject to change without notice.
© 2013 Murata Power Solutions, Inc.