MURR ELEKTRONIK
stay connected

MASI20 INSTALLATION TECHNOLOGY

Distributor 2x AS-I and 3x extern power

Art.No.: 55606
Weight: 0.087
Country of origin: CZ
Model designation: AS-i Bus- u. Powerverteiler IP20

3 AS-Interface + 2 power ports
5 plug terminals included

Link to Product

Illustration



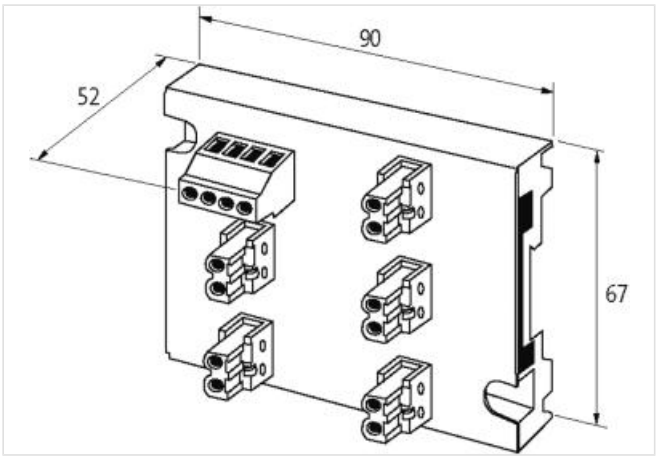

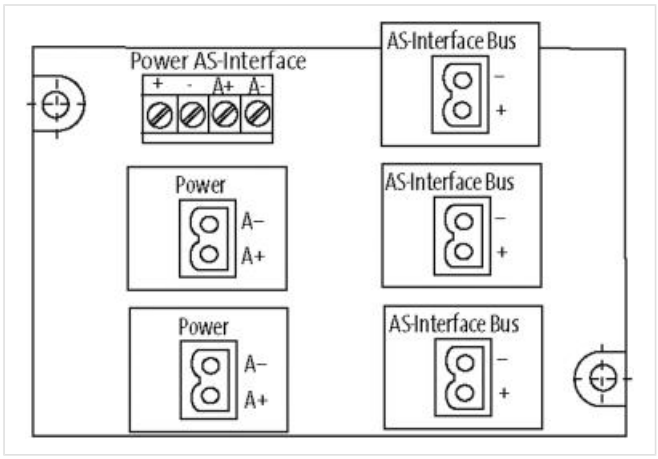

Product may differ from Image

Commercial data

ECLASS-6.0	27279219
ECLASS-6.1	27279219
ECLASS-7.0	27279219
ECLASS-8.0	27279219

The information in this Product-PDF has been compiled with the utmost care.
Liability for the correctness completeness and topicality of the information is restricted to gross negligence. Version: 2024-12-18

MURR ELEKTRONIK
stay connected

ECLASS-9.0	27440108
ECLASS-10.1	27440111
ECLASS-11.1	27440111
ECLASS-12.0	27440111
ETIM-5.0	EC001596
customs tariff number	85366990
GTIN	4048879050494
Packaging unit	1
Electrical data | Supply	
Operating voltage DC max.	36 V
Current operating per port max.	8 A
Total current max.	24 A
Device protection | Electrical	
Degree of protection (EN IEC 60529)	IP20
Insulation strength ASI/Power	200 V
Mechanical data | Mounting data	
Mounting method	geschnappt
Suitable for mounting type	mounting rail, (EN 60715)
Height	52 mm
Width	67 mm
Depth	90 mm
Environmental characteristics | Climatic	
Operating temperature min.	-20 °C
Operating temperature max.	70 °C
Conformity	
Product standard	EN 60664-1
Connection type 3	
Connection type 1	Asi Bus
Connection type 2	Power
Connection type 3	Power / Asi
Connection	Screw terminals SK
Family construction form	terminal
Gender	female
Color contact carrier	green
No. of poles	2
PIN 1	A +
PIN 2	A -
Connection	Screw terminals SK
Family construction form	terminal
Gender	female
Color contact carrier	green
No. of poles	2
PIN 1	Power +
PIN 2	Power -
Connection	Screw terminals SK
Family construction form	terminal
Gender	female
Color contact carrier	green
No. of poles	4
PIN 1	Power +
PIN 2	Power -
PIN 3	AS-i +

The information in this Product-PDF has been compiled with the utmost care.
Liability for the correctness completeness and topicality of the information is restricted to gross negligence. Version: 2024-12-18

PIN 4	AS-i -

The information in this Product-PDF has been compiled with the utmost care.
Liability for the correctness completeness and topicality of the information is restricted to gross negligence. Version: 2024-12-18