ELECTRIC DOUBLE LAYER CAPACITORS "EVerCAP®"

nichicon

JUM

Radial Lead Type, Standard

- Standard type (2.7V).
- Suitable for quick charge and discharge.
- Wide temperature range (– 25 to +70°C).
- Compliant to the RoHS directive (2011/65/EU,(EU)2015/863).

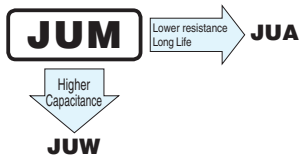

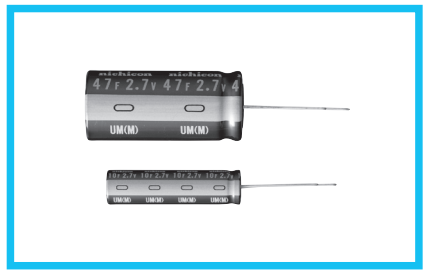

■Specifications

Item	Performance Characteristics
Category Temperature Range	– 25 to +70°C
Rated Voltage Range	2.7V
Rated Capacitance Range	1 to 47F See Note
Capacitance Tolerance	±20% , 20°C
Stability at Low Temperature	Capacitance (– 25°C) / Capacitance (+20°C) ×100 ≧ 70% ESR (– 25°C) / ESR (+20°C) ≦ 4
ESR, DCR*	Refer to the table below (20°C). *DC internal resistance
Endurance	The specifications listed at right shall be met when the capacitors are restored to 20°C after the rated voltage is applied for 1000 hours at 70°C. — Capacitance change: Within ±30% of the initial capacitance value; ESR: 300% or less than the initial specified value
Shelf Life	The specifications listed at right shall be met when the capacitors are restored to 20°C after storing the capacitors under no load for 1000 hours at 70°C. — Capacitance change: Within ±30% of the initial capacitance value; ESR: 300% or less than the initial specified value
Humidity Endurance	The specifications listed at right shall be met when the capacitors are restored to 20°C after the rated voltage is applied for 500 hours at 40°C 90%RH. — Capacitance change: Within ±30% of the initial capacitance value; ESR: 300% or less than the initial specified value
Marking	Printed with white color letter on black sleeve.

■Drawing

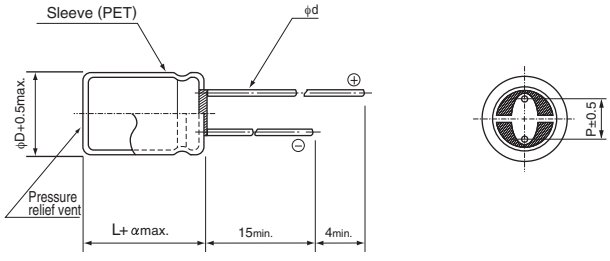

(mm)

φD	8	10	12.5	16	18
P	3.5	5.0	5.0	7.5	7.5
φd	0.6	0.6	0.6※	0.8	0.8

α	
	(φD < 10) 1.5
	(φD ≧10) 2.0

※ In case L>25 for the φ12.5 dia unit, lead dia φd=0.8

- Please refer to the Guidelines for Aluminum Electrolytic Capacitors for end seal configuration information.

Type numbering system (Example : 2.7V 10F)

1	2	3	4	5	6	7	8	9	10	11
J	U	M	T	1	1	0	6	M	H	D

- 11: Configuration ※
- 10: Capacitance tolerance (±20%)
- 6–8: Rated capacitance (10F)
- 5: Rated voltage (2.7V)
- 4: Series name
- 1–3: Type

※Configuration

φ D	Pb-free lead finishing Pb-free PET sleeve
8・10	PD
12.5 to 18	HD

■Dimensions

Rated Voltage (Code)	Rated Capacitance (F)	Code	ESR (Ω) (at 1kHz)	DCR※ Typical (Ω)	Case size φ D × L (mm)
2.7V (T1)	1	105	1.8	3	8 × 11.5
	2.2	225	1.0	1.3	8 × 20
	3.3	335	0.6	1.0	10 × 20
	4.7	475	0.4	0.6	12.5 × 20
	10	106	0.2	0.25	12.5 × 31.5
	22	226	0.07	0.13	16 × 31.5
	33	336	0.06	0.08	18 × 31.5
	47	476	0.05	0.06	18 × 40

Note :
The capacitance calculated from discharge time (ΔT) with constant current (i) after 30minuite charge with rated voltage (2.7V).
The discharge current (i) is 0.01 × rated capacitance (F).
The discharge time (ΔT) measured between 2V and 1V with constant current.
The capacitance calculated bellow.
Capacitance (F) = i × ΔT

※ The listed DCR value is typical and therefore not a guaranteed value.

ELECTRIC DOUBLE LAYER CAPACITORS "EVerCAP®"

nichicon

JUW

Radial Lead Type, High Capacitance

- High Capacitance type (2.7V).
- Higher capacitance than JUM.
- Wide temperature range (– 25 to +70°C).
- Compliant to the RoHS directive (2011/65/EU,(EU)2015/863).

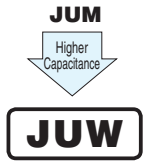

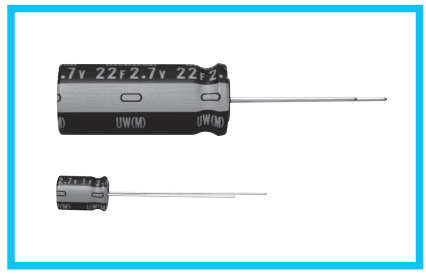

■Specifications

Item	Performance Characteristics
Category Temperature Range	– 25 to +70°C
Rated Voltage	2.7V
Rated Capacitance Range	1 to 82F See Note
Capacitance Tolerance	±20% , 20°C
Stability at Low Temperature	Capacitance (– 25°C) / Capacitance (+20°C) ×100 ≧ 70% ESR (– 25°C) / ESR (+20°C) ≦ 4
ESR, DCR*	Refer to the table below (20°C). *DC internal resistance
Endurance	The specifications listed at right shall be met when the capacitors are restored to 20°C after the rated voltage is applied for 1000 hours at 70°C. — Capacitance change: Within ±30% of the initial capacitance value; ESR: 300% or less than the initial specified value
Shelf Life	The specifications listed at right shall be met when the capacitors are restored to 20°C after storing the capacitors under no load for 1000 hours at 70°C. — Capacitance change: Within ±30% of the initial capacitance value; ESR: 300% or less than the initial specified value
Humidity Endurance	The specifications listed at right shall be met when the capacitors are restored to 20°C after the rated voltage is applied for 500 hours at 40°C 90%RH. — Capacitance change: Within ±30% of the initial capacitance value; ESR: 300% or less than the initial specified value
Marking	Printed with white color letter on black sleeve.

■Drawing

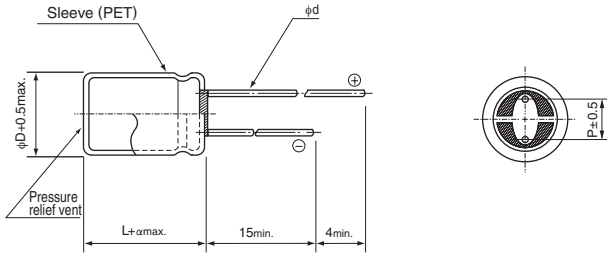

(mm)

φD	6.3	8	10	12.5	16	18
P	2.5	3.5	5.0	5.0	7.5	7.5
φd	0.5	0.6	0.6※	0.6※	0.8	0.8

α	(φD < 10) 1.5
	(φD ≧10) 2.0

※ In case L>25 for the φ10 and φ12.5 dia unit, lead dia φd=0.8

- Please refer to the Guidelines for Aluminum Electrolytic Capacitors for end seal configuration information.

Type numbering system (Example : 2.7V 1F)

1	2	3	4	5	6	7	8	9	10	11
J	U	W	T	1	1	0	5	M	C	D

- 11: Configuration ※
- 9: Capacitance tolerance (±20%)
- 6–8: Rated capacitance (1F)
- 5: Rated voltage (2.7V)
- 4: Series name
- 1–3: Type

※Configuration

φ D	Pb-free lead finishing Pb-free PET sleeve
6.3	CD
8・10	PD
12.5 to 18	HD

■Dimensions

Rated Voltage (Code)	Rated Capacitance (F)	Code	ESR (Ω) (at 1kHz)	DCR※ Typical (Ω)	Case size φ D × L (mm)
2.7V (T1)	1.0	105	1.8	4	6.3 × 9
	1.5	155	1.2	2.5	8 × 11.5
	2.7	275	0.6	1.2	8 × 20
	3.3	335	0.5	1.1	10 × 12.5
	4.7	475	0.4	0.8	10 × 20
	6.8	685	0.3	0.7	12.5 × 20
	12	126	0.3	0.6	10 × 31.5
	22	226	0.2	0.4	12.5 × 31.5
	33	336	0.12	0.28	16 × 31.5
	47	476	0.1	0.22	18 × 31.5
	82	826	0.06	0.13	18 × 40

※ The listed DCR value is typical and therefore not a guaranteed value.

Note :
The capacitance calculated from discharge time (ΔT) with constant current (i) after 30minuite charge with rated voltage (2.7V).
The discharge current (i) is 0.01 × rated capacitance (F).
The discharge time (ΔT) measured between 2V and 1V with constant current.
The capacitance calculated bellow.

$$\text{Capacitance (F)} = i \times \Delta T$$

ELECTRIC DOUBLE LAYER CAPACITORS "EVerCAP®"

nichicon

JUK

Radial Lead Type, Lower Resistance

- Lower resistance type of JUM.
- Suited for Smart Meters.
- Lower temperature range (– 40 to +70°C).
- Compliant to the RoHS directive (2011/65/EU,(EU)2015/863).

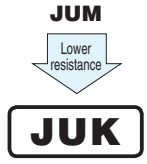

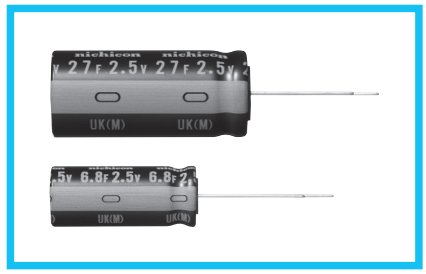

■Specifications

Item	Performance Characteristics		
Category Temperature Range	– 40 to +70°C		
Rated Voltage	2.5V		
Rated Capacitance	6.8 to 27F See Note		
Capacitance Tolerance	±20% , 20°C		
Stability at Low Temperature	Capacitance (– 40°C) / Capacitance (+20°C) ×100 ≧ 70% ESR (– 40°C) / ESR (+20°C) ≦ 7		
ESR, DCR*	Refer to the table below (20°C). *DC internal resistance		
Endurance	The specifications listed at right shall be met when the capacitors are restored to 20°C after the rated voltage is applied for 1000 hours at 70°C.	Capacitance change	Within ±30% of the initial capacitance value
		ESR	300% or less than the initial specified value
Shelf Life	The specifications listed at right shall be met when the capacitors are restored to 20°C after storing the capacitors under no load for 1000 hours at 70°C.	Capacitance change	Within ±30% of the initial capacitance value
		ESR	300% or less than the initial specified value
Humidity Endurance	The specifications listed at right shall be met when the capacitors are restored to 20°C after the rated voltage is applied for 500 hours at 40°C 90%RH.	Capacitance change	Within ±30% of the initial capacitance value
		ESR	300% or less than the initial specified value
Marking	Printed with white color letter on black sleeve.		

■Drawing

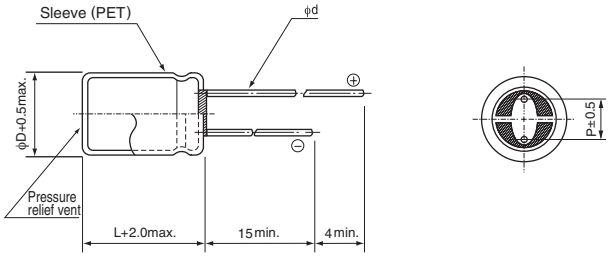

(mm)

φD	12.5	16	18
P	5.0	7.5	7.5
φd	0.8	0.8	0.8

- Please refer to the Guidelines for Aluminum Electrolytic Capacitors for end seal configuration information.

Type numbering system (Example : 2.5V 6.8F)

1	2	3	4	5	6	7	8	9	10	11
J	U	K	0	E	6	8	5	M	H	D

- Configuration ※
- Capacitance tolerance (±20%)
- Rated capacitance (6.8F)
- Rated voltage (2.5V)
- Series name
- Type

※Configuration

φ D	Pb-free lead finishing Pb-free PET sleeve
12.5 to 18	HD

■Dimensions

Rated Voltage (Code)	Rated Capacitance (F)	Code	ESR (Ω) (at 1kHz)	DCR※ Typical (Ω)	Case size φ D × L (mm)
2.5V (0E)	6.8	685	0.075	0.085	12.5 × 31.5
	12	126	0.060	0.065	16 × 31.5
	18	186	0.055	0.055	18 × 31.5
	27	276	0.040	0.035	18 × 40

※ The listed DCR value is typical and therefore not a guaranteed value.

Note :
The capacitance calculated from discharge time (ΔT) with constant current (i) after 30minuite charge with rated voltage (2.5V).
The discharge current (i) is 0.01 × rated capacitance (F).
The discharge time (ΔT) measured between 2V and 1V with constant current.
The capacitance calculated bellow.

$$\text{Capacitance (F)} = i \times \Delta T$$

ELECTRIC DOUBLE LAYER CAPACITORS "EVerCAP®"

nichicon

JUA

Radial Lead Type, Lower Resistance, Long Life

- Lower resistance and long life type of JUM.
- Lower temperature range (– 40 to +70°C).
- Load life of 2000hours at 70°C.
- Compliant to the RoHS directive (2011/65/EU,(EU)2015/863).

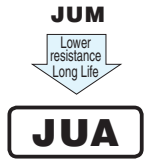

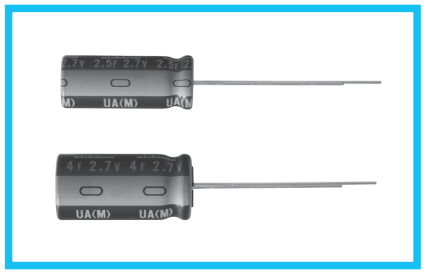

■Specifications

Item	Performance Characteristics		
Category Temperature Range	– 40 to +70°C		
Rated Voltage	2.7V		
Rated Capacitance	1.2 to 4.7F See Note		
Capacitance Tolerance	±20% , 20°C		
Stability at Low Temperature	Capacitance (– 40°C) / Capacitance (+20°C) ×100 ≧ 70% ESR (– 40°C) / ESR (+20°C) ≦ 7		
ESR	Refer to the table below (20°C).		
Endurance	The specifications listed at right shall be met when the capacitors are restored to 20°C after the rated voltage is applied for 2000 hours at 70°C.	Capacitance change	Within ±30% of the initial capacitance value
		ESR	400% or less than the initial specified value
Shelf Life	The specifications listed at right shall be met when the capacitors are restored to 20°C after storing the capacitors under no load for 1000 hours at 70°C.	Capacitance change	Within ±30% of the initial capacitance value
		ESR	400% or less than the initial specified value
Humidity Endurance	The specifications listed at right shall be met when the capacitors are restored to 20°C after the rated voltage is applied for 500 hours at 40°C 90%RH.	Capacitance change	Within ±30% of the initial capacitance value
		ESR	300% or less than the initial specified value
Marking	Printed with white color letter on black sleeve.		

■Drawing

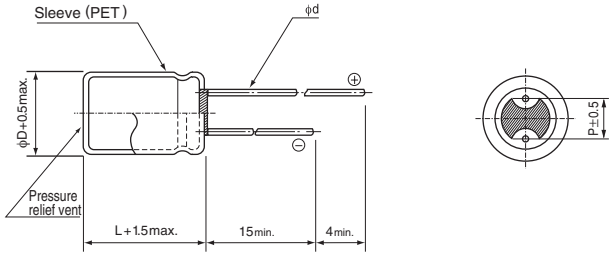

(mm)

φD	8	10
P	3.5	5.0
φd	0.6	0.6

Type numbering system (Example : 2.7V 4F)

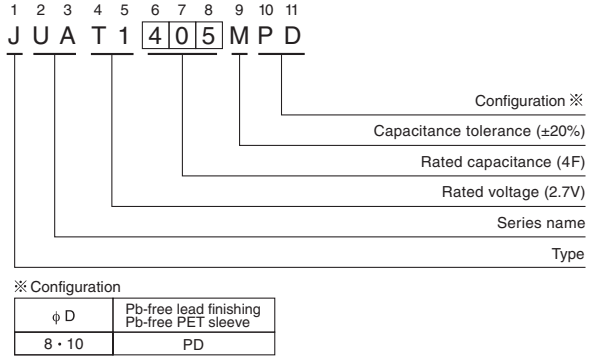

※ Configuration

φ D	Pb-free lead finishing Pb-free PET sleeve
8・10	PD

■Dimensions

Rated Voltage (Code)	Rated Capacitance (F)	Code	ESR (Ω) (at 1kHz)	DCR※ Typical (Ω)	Case size φ D × L (mm)
2.7V (T1)	1.2	125	0.40	0.40	8 × 11.5
	2.0	205	0.25	0.25	10 × 12.5
	2.5	255	0.15	0.15	8 × 20
	4.0	405	0.10	0.10	10 × 20
	4.7	475	0.15	0.13	10 × 20

Note :
The capacitance calculated from discharge time (ΔT) with constant current (i) after 30minuite charge with rated voltage (2.7V).
The discharge current (i) is 0.01 × rated capacitance (F).
The discharge time (ΔT) measured between 2V and 1V with constant current.
The capacitance calculated bellow.
Capacitance (F) = i × ΔT

※ The listed DCR value is typical and therefore not a guaranteed value.

ELECTRIC DOUBLE LAYER CAPACITORS "EVerCAP®"

nichicon

JJC

Snap-in Terminal Type

- Excellent in voltage holding property.
- Suitable for quick charge and discharge.
- Wide temperature range (– 25°C to + 60°C).
- Compliant to the RoHS directive (2011/65/EU,(EU)2015/863).



■Specifications

Item	Performance Characteristics		
Category Temperature Range	– 25 to +60°C		
Rated Voltage Range	2.5V		
Rated Capacitance Range	56 to 200F See Note		
Capacitance Tolerance	±20% (20°C)		
Stability at Low Temperature	Capacitance (– 25°C) / Capacitance (+20°C) ×100 ≧ 70% ESR (– 25°C) / ESR (+20°C) ≦ 7		
ESR, DCR*	Refer to the table below (20°C). *DC internal resistance		
Endurance	The specifications listed at right shall be met when the capacitors are restored to 20°C after the rated voltage is applied for 2000 hours at 60°C.	Capacitance change	Within ±30% of the initial capacitance value
		ESR	300% or less than the initial specified value
Shelf Life	The specifications listed at right shall be met when the capacitors are restored to 20°C after storing the capacitors under no load for 2000 hours at 60°C.	Capacitance change	Within ±30% of the initial capacitance value
		ESR	300% or less than the initial specified value
Humidity Endurance	The specifications listed at right shall be met when the capacitors are restored to 20°C after the rated voltage is applied for 500 hours at 40°C 90%RH.	Capacitance change	Within ±30% of the initial capacitance value
		ESR	300% or less than the initial specified value
Marking	Printed with white color letter on black sleeve.		

■Drawing

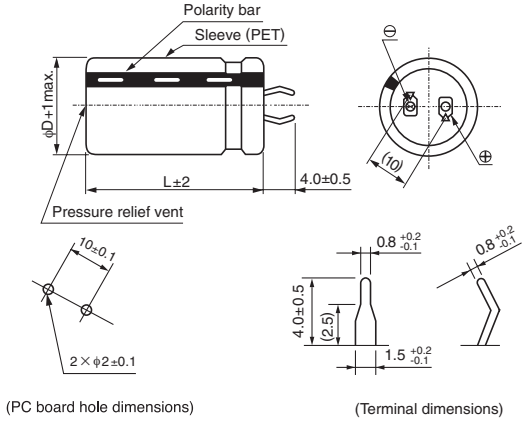

(PC board hole dimensions) (Terminal dimensions)

Type numbering system (Example : 2.5V 150F)

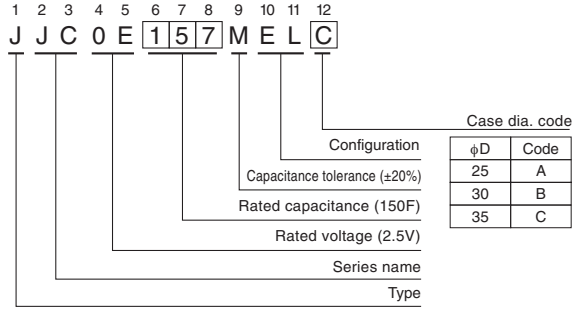

ϕD	Code
25	A
30	B
35	C

■Dimensions

Rated Voltage (code)	Cap. (F)	Cap. code	ESR(mΩ) (at 1kHz)	DCR※ Typical (mΩ)	Case size ϕD×L (mm)		
					ϕ25 (A)	ϕ30 (B)	ϕ35 (C)
2.5V (0E)	56	566	70	50	25×40	30×30	
	68	686	60	45			35×30
	82	826	60	35	25×50	30×40	
	100	107	50	30			35×35
	120	127	50	25		30×50	35×40
	150	157	40	22			35×50
	200	207	30	16			35×50

※ The listed DCR value is typical and therefore not a guaranteed value.

Note :
The capacitance calculated from discharge time (ΔT) with constant current (i) after 30minuite charge with rated voltage (2.5V).
The discharge current (i) is 0.01 × rated capacitance (F).
The discharge time (ΔT) measured between 2V and 1V with constant current.
The capacitance calculated bellow.

Capacitance (F) = i × ΔT

ELECTRIC DOUBLE LAYER CAPACITORS "EVerCAP®"

nichicon

JJD

Screw Terminal Type, High Energy Density Type

- High energy density.
- Suitable for electric power storage.
- Compliant to the RoHS directive (2011/65/EU,(EU)2015/863).



Specifications

Item	Performance Characteristics
Category Temperature Range	– 25 to +60°C
Rated Voltage Range	2.5V
Rated Capacitance Range	1000 to 2500F See Note
Capacitance Tolerance	±20% , 20°C
Stability at Temperature	Capacitance (– 25°C) / Capacitance (+20°C) ×100 ≧ 70% DCR (– 25°C) / DCR(+20°C) ≦ 7
DCR*	Refer to the table below (20°C). *DC internal resistance
Endurance	The specifications listed at right shall be met when the capacitors are restored to 20°C after the rated voltage is applied for 2000 hours at 60°C. — Capacitance change: Within ±30% of the initial capacitance value; DCR: 300% or less than the initial specified value
Shelf Life	The specifications listed at right shall be met when the capacitors are restored to 20°C after storing the capacitors under no load for 2000 hours at 60°C. — Capacitance change: Within ±30% of the initial capacitance value; DCR: 300% or less than the initial specified value
Humidity Endurance	The specifications listed at right shall be met when the capacitors are restored to 20°C after the rated voltage is applied for 500 hours at 40°C 90%RH. — Capacitance change: Within ±30% of the initial capacitance value; DCR: 300% or less than the initial specified value
Marking	Printed with white color letter on black sleeve.

Drawing

ϕ 40

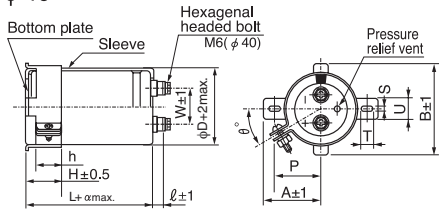

ϕ 51

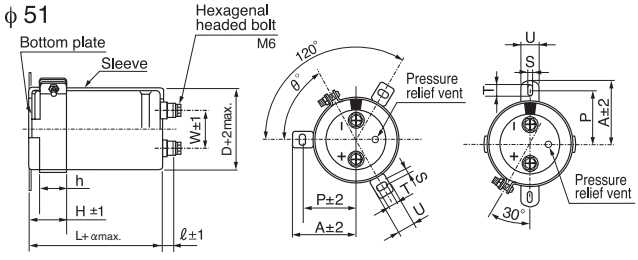

Type numbering system (Example : 2.5V 1000F)

1	2	3	4	5	6	7	8	9	10	11	12	13	14
J	J	D	0	E	1	0	8	M	S	E	D		

- 1–3: Type — JJD
- 4–5: Series name — 0E
- 6–8: Rated voltage (2.5V) / Rated capacitance (1000F) — 108
- 9: Capacitance tolerance (±20%) — M
- 10–11: Configuration ※ — SE
- 12: Case dia. code(ϕ40) — D

ϕD	Code
40	D
51	F

- 13–14: Mounting bracket

(ϕ40)

Code less	2-leg brackets
BN	No brackets

(ϕ51)

Code less	3-leg brackets
BB	2-leg brackets
BN	No bracket

※Configuration

Cr (Ⅲ) Plating (RoHS compliant)
SE

Note :
The capacitance calculated from discharge time (ΔT) with constant current (i) after 30minuite charge with rated voltage (2.5V).
The discharge current (i) is 0.01 × rated capacitance (F).
The discharge time (ΔT) measured between 2V and 1V with constant current.
The capacitance calculated bellow.

Capacitance (F) = i × ΔT

● Dimensions of terminal pitch(W) and length(ℓ) and Normal dia. of bolt (mm)

ϕ D	W	ℓ	α	Nominal of bolt
40	18.8	9	3	M6
51	26.0	10	3	M6

Dimensions

Rated Voltage (Code)	Cap. (F)	Cap. code	DCR※ Typical (mΩ)	Case size ϕ (mm)	Case size L (mm)	Ref. Weight (g)
2.5V (0E)	1000	108	8.0	40	105	210
	1300	138	6.0		135	250
	2300	238	4.0	51	135	450
	2500	258	3.5		142	500

※ The listed DCR value is typical and therefore not a guaranteed value.

● Dimensions of mounting bracket (mm)

Symbol \ Leg shape / ϕD	3-Legs	2-Legs	
	51	40	51
P	32.5	27	33.2
A	38.5	32	40
B	–	48	–
T	7.5	7.0	6.0
S	5.0	3.5	4.5
U	12	10	14
θ°	60	45	30
H	20	17	25
h	15	12	15

Note)The brackets will be supplied in the separate box.

ELECTRIC DOUBLE LAYER CAPACITORS "EVerCAP®"

nichicon

JJL

Screw Terminal Type, High Power Density Type



- High power density.
- Rapid charge-discharge.
- Suitable for regeneration and UPS applications.
- Compliant to the RoHS directive (2011/65/EU,(EU)2015/863).

■Specifications

Item	Performance Characteristics
Category Temperature Range	– 25 to +60°C
Rated Voltage Range	2.5V
Rated Capacitance Range	700 to 2000F See Note
Capacitance Tolerance	±20%(20°C)
Stability at Low Temperature	Capacitance (– 25°C) / Capacitance (+20°C) ×100 ≧ 70% DCR (– 25°C) / DCR (+20°C) ≦ 7
DCR*	Refer to the table below (20°C). *DC internal resistance
Endurance	The specifications listed at right shall be met when the capacitors are restored to 20°C after the rated voltage is applied for 2000 hours at 60°C. — Capacitance change: Within ±30% of the initial capacitance value; DCR: 300% or less than the initial specified value
Shelf Life	The specifications listed at right shall be met when the capacitors are restored to 20°C after storing the capacitors under no load for 2000 hours at 60°C. — Capacitance change: Within ±30% of the initial capacitance value; DCR: 300% or less than the initial specified value
Humidity Endurance	The specifications listed at right shall be met when the capacitors are restored to 20°C after the rated voltage is applied for 500 hours at 40°C 90%RH. — Capacitance change: Within ±30% of the initial capacitance value; DCR: 300% or less than the initial specified value
Marking	Printed with white color letter on black sleeve.

■Drawing

ϕ 40

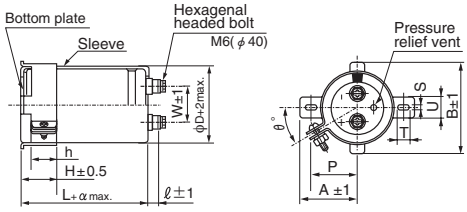

ϕ 51

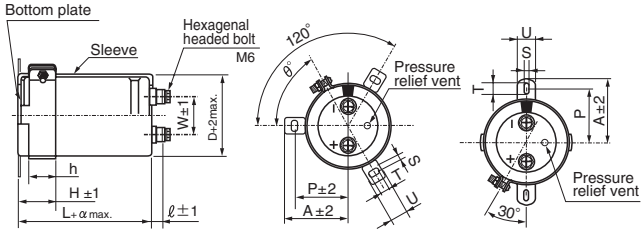

Type numbering system (Example : 2.5V 700F)

1	2	3	4	5	6	7	8	9	10	11	12	13	14
J	J	L	0	E	7	0	7	M	S	E	D		

- 1–3: Type
- 4–5: Series name
- 6: Rated voltage (2.5V)
- 7–8: Rated capacitance (700F)
- 9: Capacitance tolerance (±20%)
- 10–11: Configuration ※
- 12: Case dia. code(ϕ40)
- 13–14: Mounting bracket

ϕD	Code
40	D
51	F

(ϕ40)

Code less	2-leg brackets
BN	No brackets

(ϕ51)

Code less	3-leg brackets
BB	2-leg brackets
BN	No bracket

※Configuration

Cr (III) Plating (RoHS compliant)
SE

Note :
The capacitance calculated from discharge time (ΔT) with constant current (i) after 30minuite charge with rated voltage (2.5V).
The discharge current (i) is 0.01 × rated capacitance (F).
The discharge time (ΔT) measured between 2V and 1V with constant current.
The capacitance calculated bellow.
Capacitance (F) = i × ΔT

● Dimensions of terminal pitch(W) and length(ℓ) and Normal dia. of bolt (mm)

ϕ D	W	ℓ	α	Nominal of bolt
40	18.8	9	3	M6
51	26.0	10	3	M6

■Dimensions

Rated Voltage (Code)	Cap. (F)	Cap. code	DCR※ Typical (mΩ)	Case size ϕD×L (mm)		Ref. Weight (g)
				ϕ D	L	
2.5V (0E)	700	707	3.5	40	105	210
	1000	108	2.5		142	250
	1200	128	2.2		167	300
	1100	118	2.8	51	105	380
	1700	178	1.7		142	500
	2000	208	1.5		167	600

※ The listed DCR value is typical and therefore not a guaranteed value.

● Dimensions of mounting bracket (mm)

Leg shape / Symbol \ ϕD	3-Legs	2-Legs	
	51	40	51
P	32.5	27	33.2
A	38.5	32	40
B	–	48	–
T	7.5	7.0	6.0
S	5.0	3.5	4.5
U	12	10	14
θ°	60	45	30
H	20	17	25
h	15	12	15

Note)The brackets will be supplied in the separate box.