NR1600 series

500mA Low Dropout Voltage Regulator with Soft-Start Time Adjustment and Power-Good Function

FEATURES

- Input Voltage Range (Maximum Rating): 1.4 V to 5.5 V (6.5 V)
- Output Voltage Range:
  Fixed Output Voltage Type: 1.0 V to 3.6 V
  Adjustable Output Voltage Type: 1.0 V to 4.8 V
- Output Current: 500 mA
- Quiescent Current: Typ. 80 µA
- Output Noise Voltage: Typ. V_{SET} × 30 µVrms (I_{OUT} = 100 mA)
- Ripple Rejection: Typ. 75 dB (f = 1 kHz)
- Dropout Voltage: NR1600GK / DD Typ. 0.16 V
  NR1600AC Typ. 0.18 V
  (I_{OUT} = 500 mA, V_{SET} = 3.3 V)
- Thermal Shutdown Function: Typ. 165°C
- Start-Up Inrush Current Limit: Typ. 160 mA
- Foldback Protection
- Soft-Start Time Adjustment Function (C_{SS} adjustment), Power-Good Function, Discharge Function

GENERAL DESCRIPTION

The NR1600 series are CMOS-based low dropout voltage regulator with Soft-start function and Power-Good function.
An external capacitor (C_{SS}) can be used to adjust the Soft-start time during startup, making it easy to suppress inrush current and adjust slew rate.
In addition, although it is a 500mA regulator with Soft-start and Power-Good function, it has a lineup of small packages of 1.2mm x 1.2mm x 0.4mm, which contributes to system space saving.

APPLICATIONS

- Power source for battery-powered equipments, electrical home appliances and portable communication equipments, etc.

PACKAGE LINEUP

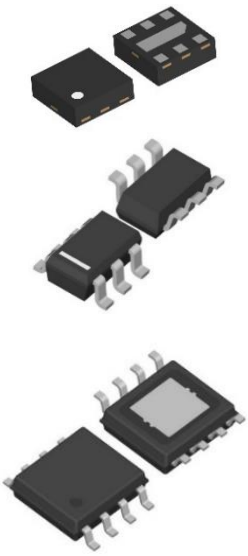

DFN1212-6-GK
1.2 × 1.2 × 0.4

SOT-23-6-DD
2.9 × 2.8 × 1.1

HSOP-8-AC
5.2 × 4.4 × 1.5

UNIT : mm

TYPICAL CHARACTERISTICS

Soft-Start Time

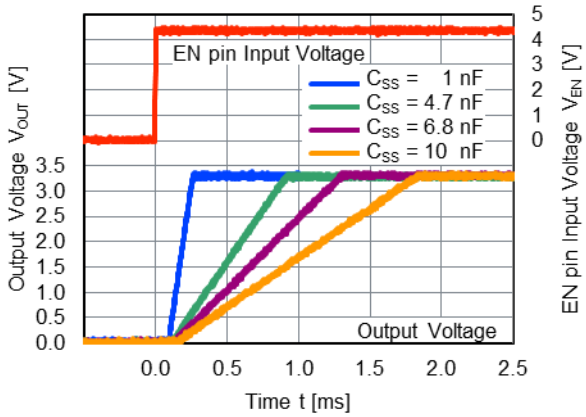

V_{SET}=3.3V , V_{IN} = V_{SET} + 1.0 V,
C_{IN} = 1.0 µF, C_{OUT} = 1.0 µF, I_{OUT} = 0 mA, T_a = 25 °C

■ PRODUCT NAME INFORMATION

NR1600aa bbb c dd e

Description of Configuration

Composition	Item	Description
aa	Package Code	Indicates the package. Refer to the order information.
bbb	Output Voltage	Indicates set output voltage (V_{SET}) Adjustable Output Voltage Type ： 000（NR1600xx000 A/C/D/F） The internal fixed output voltage type has a lineup of main voltages in the range of 1.0 V (100) to 3.6 V (360).
c	Version	Indicates Power-Good function and discharge function.
dd	Packing	Indicates taping direction. Please refer to the packaging specifications.
e	Grade	Indicates the quality grade.

Version

c	Adjustable Output (000)	Fixed Output (100 to 360)	Power-Good Function	Discharge Function	Package
A	✓	✓	-	✓	DFN1212-6-GK, SOT-23-6-DD
B	-	✓	✓	✓	DFN1212-6-GK, SOT-23-6-DD
C	✓	✓	✓	✓	HSOP-8-AC
D	✓	✓	-	-	DFN1212-6-GK, SOT-23-6-DD
E	-	✓	✓	-	DFN1212-6-GK, SOT-23-6-DD
F	✓	✓	✓	-	HSOP-8-AC

Grade

e	Applications	Operating Temperature Range	Test Temperature
S	Consumer	−40°C to 85°C	25°C

■ ORDER INFORMATION

PRODUCT NAME	PACKAGE	RoHS	HALOGEN-FREE	PLATING COMPOSITION	WEIGHT (mg)	Quantity Per Reel (pcs)
NR1600GK bbb c E4S	DFN1212-6-GK	Yes	Yes	NiPdAu	1.59	5000
NR1600DD bbb c E1S	SOT-23-6-DD	Yes	Yes	Sn	15	3000
NR1600AC bbb c E2S	HSOP-8-AC	Yes	Yes	Sn	81	1000

Please contact us if you require a voltage other than the line-up product.
Refer to “ *MARKING SPECIFICATION* “ for details.

■ PIN DESCRIPTIONS



NR1600GK (DFN1212-6-GK) Pin Configuration

(1) The tab on the bottom of the package is substrate level.
The tab must be connected to GND on the board.

Pin No.	Pin Name	I/O	Description
1	VOUT	O	Output Voltage Pin Connect the output capacitor (C_{OUT}) between VOUT pin and GND.
2	FB	I	Feedback Input Pin Fixed Output Voltage Type(NR1600GKxxxA/D) : Connect to VOUT pin. Adjustable Output Voltage Type(NR1600GK000A/D) : Connect two external resistors to set the output voltage.
	PG	O	Power-Good Output Pin (NR1600GKxxxB/E). NMOS open-drain output. This pin outputs "High" (pull-up voltage) when the output voltage becomes PG pin High Threshold Voltage (V_{PGH}) or more.
3	CSS	-	Soft-start Adjustment Pin Soft-start time can be adjusted by connecting a capacitor between this pin and GND.
4	EN	I	Enable Pin ("High" active) Can set the active state with the "High" input and the shutdown state with the "Low" input. This pin is pulled down with an internal constant current.
5	GND	-	Ground Pin
6	VIN	Power	Power Supply Input Pin Connect the input capacitor (C_{IN}) between VIN pin and GND.

For details, refer to " *TYPICAL APPLICATION CIRCUIT* " and " *THEORY OF OPERATION* ".

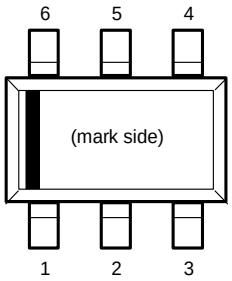

NR1600DD (SOT-23-6-DD) Pin Configuration

Pin No.	Pin Name	I/O	Description
1	VIN	Power	Power Supply Input Pin Connect the input capacitor (C_{IN}) between VIN pin and GND.
2	GND	-	Ground Pin
3	EN	I	Enable Pin ("High" active) Can set the active state with the "High" input and the shutdown state with the "Low" input. This pin is pulled down with an internal constant current.
4	CSS	-	Soft-start Adjustment Pin Soft-start time can be adjusted by connecting a capacitor between this pin and GND.
5	FB	I	Feedback Input Pin Fixed Output Voltage Type (NR1600DDxxxA/D) : Connect to VOUT pin. Adjustable Output Voltage Type (NR1600DD000A/D) : Connect two external resistors to set the output voltage.
	PG	O	Power-Good Output Pin (NR1600DDxxxB/E). NMOS open-drain output. This pin outputs "High" (pull-up voltage) when the output voltage becomes PG pin High Threshold Voltage (V_{PGH}) or more.
6	VOUT	O	Output Voltage Pin Connect the output capacitor (C_{OUT}) between VOUT pin and GND.

For details, refer to " *TYPICAL APPLICATION CIRCUIT* " and " *THEORY OF OPERATION* ".

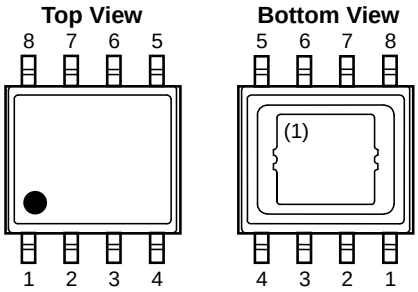

NR1600AC (HSOP-8-AC) Pin Configuration

(1) The tab on the bottom of the package is substrate level.
The tab must be connected to GND on the board.

Pin No.	Pin Name	I/O	Description
1	VOUT	O	Output Voltage Pin Connect the output capacitor (C_{OUT}) between VOUT pin and GND.
2	FB	I	Feedback Input Pin Fixed Output Voltage Type (NR1600ACxxxC/F) : Connect to VOUT pin. Adjustable Output Voltage Type (NR1600AC000C/F) : Connect two external resistors to set the output voltage.
3	PG	O	Power-Good Output Pin (NR1600ACxxxC/F). NMOS open-drain output. This pin outputs "High" (pull-up voltage) when the output voltage becomes PG pin High Threshold Voltage (V_{PGH}) or more.
4	CSS	-	Soft-start Adjustment Pin Soft-start time can be adjusted by connecting a capacitor between this pin and GND.
5	EN	I	Enable Pin ("High" active) Can set the active state with the "High" input and the shutdown state with the "Low" input. This pin is pulled down with an internal constant current.
6	GND	-	Ground Pin
7	NC	-	No Connection It is recommended to leave it open to prevent short-circuiting with adjacent pins when mounting.
8	VIN	Power	Power Supply Input Pin Connect the input capacitor (C_{IN}) between VIN pin and GND.

For details, refer to " *TYPICAL APPLICATION CIRCUIT* " and " *THEORY OF OPERATION* ".

■ ABSOLUTE MAXIMUM RATINGS

Item	Symbol	Ratings	Unit
Input Voltage	V_{IN}	−0.3 to 6.5	V
EN Pin Input Voltage	V_{EN}	−0.3 to 6.5	V
CSS Pin Input Voltage	V_{CSS}	−0.3 to V_{IN} + 0.3 (Max. 6.5)	V
FB Pin Input Voltage	V_{FB}	−0.3 to 6.5	V
PG Pin Voltage	V_{PG}	−0.3 to 6.5	V
VOUT Pin Voltage	V_{OUT}	−0.3 to V_{IN} + 0.3 (Max. 6.5)	V
Junction Temperature *1	T_j	−40 to 125	°C
Storage Temperature Range	T_{stg}	−55 to 125	°C

ABSOLUTE MAXIMUM RATINGS

Electronic and mechanical stress momentarily exceeded absolute maximum ratings may cause permanent damage and may degrade the lifetime and safety for both device and system using the device in the field. The functional operation at or over these absolute maximum ratings is not assured.

*1 Calculate the power consumption of the IC from the operating conditions and calculate the junction temperature with the thermal resistance.
Please refer to "Thermal characteristics" for the thermal resistance under our measurement board conditions.

■ THERMAL CHARACTERISTICS

Package	Item	Measurement Result	Unit
DFN1212-6-GK	Thermal Resistance (θja)	64	°C/W
	Thermal Characterization Parameter (ψjt)	22	
SOT-23-6-DD	Thermal Resistance (θja)	150	
	Thermal Characterization Parameter (ψjt)	51	
HSOP-8-AC	Thermal Resistance (θja)	34.5	
	Thermal Characterization Parameter (ψjt)	10	

θja : Junction-to-Ambient Thermal Resistance
ψjt : Junction-to-Top Thermal Characterization Parameter
For more information here

■ ELECTROSTATIC DISCHARGE RATINGS

Item	Conditions	Protection Voltage
HBM	C = 100 pF, R = 1.5 kΩ	±2000 V
CDM		±1000 V

ELECTROSTATIC DISCHARGE RATINGS

The electrostatic discharge test is done based on JESD47.
In the HBM method, ESD is applied using the power supply pin and GND pin as reference pins.

■ RECOMMENDED OPERATING CONDITIONS

Item	Symbol	Ratings	Unit
Input Voltage	V_{IN}	1.4 to 5.5	V
EN Pin Input Voltage	V_{EN}	0 to 5.5	V
Operating Temperature Range	T_a	−40 to 85	°C
Output Current	I_{OUT}	0 to 500	mA

RECOMMENDED OPERATING CONDITIONS

All of electronic equipment should be designed that the mounted semiconductor devices operate within the recommended operating conditions. The semiconductor devices cannot operate normally over the recommended operating conditions, even if when they are used over such conditions by momentary electronic noise or surge. And the semiconductor devices may receive serious damage when they continue to operate over the recommended operating conditions.

■ ELECTRICAL CHARACTERISTICS

V_{IN} = V_{SET} + 1 V , I_{OUT} = 1 mA, C_{IN} = 1.0 µF, C_{OUT} = 1.0 µF unless otherwise specified.
For items without temperature conditions, TYP values are T_a = 25 °C and MIN/MAX values are given under −40 °C ≤ T_a ≤ 85 °C.

NR1600xx100x to 360x (Fixed Output Voltage Type)

Parameter	Symbol	Conditions		MIN	TYP	MAX	Unit
Output Voltage	V_{OUT}	T_a = 25 °C		×0.99	-	×1.01	V
		-40 °C ≤ T_a ≤ 85 ºC V_{IN} = V_{SET} + 0.5 V to 5.5 V		×0.97	-	×1.03	V
Quiescent Current *1	I_Q	V_{IN} = V_{EN} = V_{SET} + 1 V I_{OUT} = 0 mA		-	80	125	µA
Shutdown Current	I_{SD}	V_{IN} = 5.5 V, V_{EN} = 0 V, T_a = 25 °C		-	0.1	0.4	µA
Dropout Voltage	V_{DO}	Refer to the *"SPECIFIC ELECTRICAL CHARACTERISTICS BY OUTPUT VOLTAGE"*.					
Load Regulation	$\Delta V_{OUT}/\Delta I_{OUT}$	I_{OUT} = 1 mA to 500 mA		-10	-	10	mV
Line Regulation	$\Delta V_{OUT}/\Delta V_{IN}$	V_{IN} = V_{SET} + 0.5 V to 5.5 V		-	0.01	-	%/V
Ripple Rejection	RR	V_{IN} = V_{SET} + 1 V, Ripple 0.2 Vp-p, I_{OUT} = 100 mA	f = 1 kHz	-	75	-	dB
			f = 10 kHz	-	70	-	dB
Output Noise Voltage	V_{NOISE}	I_{OUT} = 100 mA, f = 10 Hz to 100 kHz		-	V_{SET} ×30	-	µVrms
UVLO Release Voltage	$V_{UVLOREL}$	V_{IN} = Rising		-	-	1.4	V
UVLO Detection Voltage	$V_{UVLODET}$	V_{IN} = Falling		0.7	-	-	V
Output Current Limit	I_{LIM}	V_O = V_{SET} × 0.9 V		500	750	-	mA
Short-circuit Current	I_{SC}	V_O = 0 V		-	180	-	mA
Start-up Inrush Current Limit	$I_{LIMRISE}$	V_O = V_{SET} × 0.9 V		-	160	-	mA
EN pin High Input Voltage	V_{ENH}	V_{IN} = 5.5 V		0.78	-	-	V
EN pin Low Input Voltage	V_{ENL}	V_{IN} = 1.4 V		0	-	0.40	V
EN pin Current	I_{EN}	V_{IN} = V_{EN} = 5.5 V		-	0.25	0.70	µA
PG pin High Threshold Voltage	V_{PGH}	V_O = (V_{FB} =) Rising	NR1600xxxxx B/C/E/F	-	V_{SET} ×0.91	V_{SET} ×0.96	V
PG pin Low Threshold Voltage	V_{PGL}	V_O = (V_{FB} =) Falling	NR1600xxxxx B/C/E/F	V_{SET} ×0.80	V_{SET} ×0.86	-	V
PG pin On-resistance	R_{ONPG}	V_{IN} = 1.4 V, V_{EN} = 0 V, V_{PG}= 0.1 V	NR1600xxxxx B/C/E/F	-	40	-	Ω
PG pin Leak Current	I_{LEAKPG}	V_{IN} = V_{EN} = V_{SET} +1 V, V_{PG}= 5.5 V	NR1600xxxxx B/C/E/F	-	-	1.0	µA
CSS pin Charge Current	I_{CSS}	V_{CSS} = 0V		-	3.2	-	µA
Soft-start Time	t_{SS}	C_{SS} = 6.8 nF, V_{OUT} = V_{SET} × 0.1 to V_{SET} × 0.9		0.5	1.0	1.5	ms
Discharge FET On-resistance	R_{ONDIS}	V_{IN}= 4.0 V, V_{EN} = 0 V, V_O = 0.1 V	NR1600xxxxx A/B/C	-	32	-	Ω
Thermal Shutdown Detection Temperature	T_{SDDET}	T_j = Rising		-	165	-	°C
Thermal Shutdown Release Temperature	T_{SDREL}	T_j = Falling		-	130	-	°C

All electrical characteristic parameters are tested under the condition of $T_j \approx T_a$ = 25 °C, except for Ripple Rejection and Output Noise Voltage.
*1 Defined as the VIN pin current.

■ ELECTRICAL CHARACTERISTICS

Short the VOUT pin and FB pin (set to V_{SET}=1.0V)
V_{IN} = V_{SET} + 1 V , I_{OUT} = 1 mA, C_{IN} = 1.0 µF, C_{OUT} = 1.0 µF unless otherwise specified.
For items without temperature conditions, TYP values are T_a = 25 °C and MIN/MAX values are given under −40 °C ≤ T_a ≤ 85 °C.

NR1600xx000A/C/D/F (Adjustable Output Voltage Type)

Parameter	Symbol	Conditions		MIN	TYP	MAX	Unit
Feedback pin Output Voltage	V_{FB}	T_a = 25 °C		0.99	1.00	1.01	V
		−40 °C ≤ T_a ≤ 85 °C V_{IN} = V_{SET} + 0.5 V to 5.5 V		0.97	1.00	1.03	V
Quiescent Current *1	I_Q	V_{IN} = V_{EN} = V_{SET} + 1 V I_{OUT} = 0 mA		-	80	125	µA
Shutdown Current	I_{SD}	V_{IN} = 5.5 V, V_{EN} = 0 V, T_a = 25 °C		-	0.1	0.4	µA
Dropout Voltage	V_{DO}	I_{OUT} = 500 mA	NR1600GK000A/D NR1600DD000A/D	-	0.54	0.79	V
			NR1600AC000C/F	-	0.56	0.81	V
Load Regulation	$\Delta V_{OUT}/\Delta I_{OUT}$	I_{OUT} = 1 mA to 500 mA		-10	-	10	mV
Line Regulation	$\Delta V_{OUT}/\Delta V_{IN}$	V_{IN} = V_{SET} + 0.5 V to 5.5 V		-	0.01	-	%/V
Ripple Rejection	RR	V_{IN} = V_{SET} + 1 V, Ripple 0.2 Vp-p, I_{OUT} = 100 mA	f = 1 kHz	-	75	-	dB
			f = 10 kHz	-	70	-	dB
Output Noise Voltage	V_{NOISE}	I_{OUT} = 100 mA, f = 10 Hz to 100 kHz		-	V_{SET} ×30	-	µVrms
UVLO Release Voltage	$V_{UVLOREL}$	V_{IN} = Rising		-	-	1.4	V
UVLO Detection Voltage	$V_{UVLODET}$	V_{IN} = Falling		0.7	-	-	V
Output Current Limit	I_{LIM}	V_O = V_{SET} × 0.9 V		500	750	-	mA
Short-circuit Current	I_{SC}	V_O = 0 V		-	180	-	mA
Start-up Inrush Current Limit	$I_{LIMRISE}$	V_O = V_{SET} × 0.9 V		-	160	-	mA
EN pin High Input Voltage	V_{ENH}	V_{IN} = 5.5 V		0.78	-	-	V
EN pin Low Input Voltage	V_{ENL}	V_{IN} = 1.4 V		0	-	0.40	V
EN pin Current	I_{EN}	V_{IN} = V_{EN} = 5.5 V		-	0.25	0.70	µA
PG pin High Threshold Voltage	V_{PGH}	V_O = V_{FB} = Rising	NR1600AC000C/F	-	0.91	0.96	V
PG pin Low Threshold Voltage	V_{PGL}	V_O = V_{FB} = Falling	NR1600AC000C/F	0.80	0.86	-	V
PG pin On-resistance	R_{ONPG}	V_{IN} = 1.4 V, V_{EN} = 0 V, V_{PG}= 0.1 V	NR1600AC000C/F	-	40	-	Ω
PG pin Leak Current	I_{LEAKPG}	V_{IN} = V_{EN} = V_{SET} +1 V, V_{PG}= 5.5 V	NR1600AC000C/F	-	-	1.0	µA
CSS pin Charge Current	I_{CSS}	V_{CSS} = 0 V		-	3.2	-	µA
Soft-start Time	t_{SS}	C_{SS} = 6.8 nF, V_{OUT} = V_{SET} × 0.1 to V_{SET} × 0.9		0.5	1.0	1.5	ms
Discharge FET On-resistance	R_{ONDIS}	V_{IN}= 4.0 V, V_{EN} = 0 V V_O = 0.1 V	NR1600xx000A/B/C	-	32	-	Ω
Thermal Shutdown Detection Temperature	T_{SDDET}	T_j = Rising		-	165	-	°C
Thermal Shutdown Release Temperature	T_{SDREL}	T_j = Falling		-	130	-	°C

All electrical characteristic parameters are tested under the condition of $T_j \approx T_a$ = 25 °C, except for Ripple Rejection and Output Noise Voltage.
*1 Defined as the VIN pin current.

■ SPECIFIC ELECTRICAL CHARACTERISTICS BY OUTPUT VOLTAGE

TYP values are T_a = 25 °C, and MIN/MAX values are listed under −40 °C ≤ T_a ≤ 85 °C.

NR1600GK/DDxxx A/B/D/E (Fixed Output Voltage Type)

Set Output Voltage V_{SET} [V]	Dropout Voltage (−40 °C ≤ T_a ≤ 85 °C) V_{DO} [V]		
	Conditions	TYP	MAX
1.0 ≤ V_{SET} < 1.1	I_{OUT} = 500 mA	0.54	0.79
1.1 ≤ V_{SET} < 1.2		0.48	0.67
1.2 ≤ V_{SET} < 1.3		0.42	0.62
1.3 ≤ V_{SET} < 1.5		0.38	0.55
1.5 ≤ V_{SET} < 1.8		0.31	0.46
1.8 ≤ V_{SET} < 2.2		0.25	0.38
2.2 ≤ V_{SET} < 2.5		0.21	0.33
2.5 ≤ V_{SET} < 2.8		0.19	0.30
2.8 ≤ V_{SET} < 3.3		0.17	0.28
3.3 ≤ V_{SET} ≤ 3.6		0.16	0.27

Above parameters are all tested under the condition of $T_j \approx T_a$ = 25 °C.

NR1600ACxxxC/F (Fixed Output Voltage Type)

Set Output Voltage V_{SET} [V]	Dropout Voltage (−40 °C ≤ T_a ≤ 85 °C) V_{DO} [V]		
	Conditions	TYP	MAX
1.0 ≤ V_{SET} < 1.1	I_{OUT} = 500 mA	0.56	0.81
1.1 ≤ V_{SET} < 1.2		0.50	0.69
1.2 ≤ V_{SET} < 1.3		0.44	0.64
1.3 ≤ V_{SET} < 1.5		0.40	0.57
1.5 ≤ V_{SET} < 1.8		0.33	0.48
1.8 ≤ V_{SET} < 2.2		0.27	0.40
2.2 ≤ V_{SET} < 2.5		0.23	0.35
2.5 ≤ V_{SET} < 2.8		0.21	0.32
2.8 ≤ V_{SET} < 3.3		0.19	0.30
3.3 ≤ V_{SET} ≤ 3.6		0.18	0.29

Above parameters are all tested under the condition of $T_j \approx T_a$ = 25 °C.

■ PRODUCT-SPECIFIC ELECTRICAL CHARACTERISTICS

NR1600GK / NR1600DD [Unit : V]

PRODUCT NAME	V_{OUT} (T_a = 25 °C)			V_{OUT} (-40 °C ≤ T_a ≤ 85 °C)			V_{DO} (I_{OUT} = 500 mA)	
	MIN	TYP	MAX	MIN	TYP	MAX	TYP	MAX
NR1600xx100x	0.990	1.0	1.010	0.970	1.0	1.030	0.54	0.79
NR1600xx110x	1.089	1.1	1.111	1.067	1.1	1.133	0.48	0.67
NR1600xx120x	1.188	1.2	1.212	1.164	1.2	1.236	0.42	0.62
NR1600xx130x	1.287	1.3	1.313	1.261	1.3	1.339	0.38	0.55
NR1600xx140x	1.386	1.4	1.414	1.358	1.4	1.442	0.38	0.55
NR1600xx150x	1.485	1.5	1.515	1.455	1.5	1.545	0.31	0.46
NR1600xx160x	1.584	1.6	1.616	1.552	1.6	1.648	0.31	0.46
NR1600xx170x	1.683	1.7	1.717	1.649	1.7	1.751	0.31	0.46
NR1600xx180x	1.782	1.8	1.818	1.746	1.8	1.854	0.25	0.38
NR1600xx190x	1.881	1.9	1.919	1.843	1.9	1.957	0.25	0.38
NR1600xx200x	1.980	2.0	2.020	1.940	2.0	2.060	0.25	0.38
NR1600xx210x	2.079	2.1	2.121	2.037	2.1	2.163	0.25	0.38
NR1600xx220x	2.178	2.2	2.222	2.134	2.2	2.266	0.21	0.33
NR1600xx230x	2.277	2.3	2.323	2.231	2.3	2.369	0.21	0.33
NR1600xx240x	2.376	2.4	2.424	2.328	2.4	2.472	0.21	0.33
NR1600xx250x	2.475	2.5	2.525	2.425	2.5	2.575	0.19	0.30
NR1600xx260x	2.574	2.6	2.626	2.522	2.6	2.678	0.19	0.30
NR1600xx270x	2.673	2.7	2.727	2.619	2.7	2.781	0.19	0.30
NR1600xx280x	2.772	2.8	2.828	2.716	2.8	2.884	0.17	0.28
NR1600xx290x	2.871	2.9	2.929	2.813	2.9	2.987	0.17	0.28
NR1600xx300x	2.970	3.0	3.030	2.910	3.0	3.090	0.17	0.28
NR1600xx310x	3.069	3.1	3.131	3.007	3.1	3.193	0.17	0.28
NR1600xx320x	3.168	3.2	3.232	3.104	3.2	3.296	0.17	0.28
NR1600xx330x	3.267	3.3	3.333	3.201	3.3	3.399	0.16	0.27
NR1600xx340x	3.366	3.4	3.434	3.298	3.4	3.502	0.16	0.27
NR1600xx350x	3.465	3.5	3.535	3.395	3.5	3.605	0.16	0.27
NR1600xx360x	3.564	3.6	3.636	3.492	3.6	3.708	0.16	0.27

Above parameters are all tested under the condition of $T_j \approx T_a$ = 25 °C.

NR1600AC [Unit : V]

PRODUCT NAME	V_{OUT} (T_a = 25 °C)			V_{OUT} (−40 °C ≤ T_a ≤ 85 °C)			V_{DO} (I_{OUT} = 500 mA)	
	MIN	TYP	MAX	MIN	TYP	MAX	TYP	MAX
NR1600xx100x	0.990	1.0	1.010	0.970	1.0	1.030	0.56	0.81
NR1600xx110x	1.089	1.1	1.111	1.067	1.1	1.133	0.50	0.69
NR1600xx120x	1.188	1.2	1.212	1.164	1.2	1.236	0.44	0.64
NR1600xx130x	1.287	1.3	1.313	1.261	1.3	1.339	0.40	0.57
NR1600xx140x	1.386	1.4	1.414	1.358	1.4	1.442	0.40	0.57
NR1600xx150x	1.485	1.5	1.515	1.455	1.5	1.545	0.33	0.48
NR1600xx160x	1.584	1.6	1.616	1.552	1.6	1.648	0.33	0.48
NR1600xx170x	1.683	1.7	1.717	1.649	1.7	1.751	0.33	0.48
NR1600xx180x	1.782	1.8	1.818	1.746	1.8	1.854	0.27	0.40
NR1600xx190x	1.881	1.9	1.919	1.843	1.9	1.957	0.27	0.40
NR1600xx200x	1.980	2.0	2.020	1.940	2.0	2.060	0.27	0.40
NR1600xx210x	2.079	2.1	2.121	2.037	2.1	2.163	0.27	0.40
NR1600xx220x	2.178	2.2	2.222	2.134	2.2	2.266	0.23	0.35
NR1600xx230x	2.277	2.3	2.323	2.231	2.3	2.369	0.23	0.35
NR1600xx240x	2.376	2.4	2.424	2.328	2.4	2.472	0.23	0.35
NR1600xx250x	2.475	2.5	2.525	2.425	2.5	2.575	0.21	0.32
NR1600xx260x	2.574	2.6	2.626	2.522	2.6	2.678	0.21	0.32
NR1600xx270x	2.673	2.7	2.727	2.619	2.7	2.781	0.21	0.32
NR1600xx280x	2.772	2.8	2.828	2.716	2.8	2.884	0.19	0.30
NR1600xx290x	2.871	2.9	2.929	2.813	2.9	2.987	0.19	0.30
NR1600xx300x	2.970	3.0	3.030	2.910	3.0	3.090	0.19	0.30
NR1600xx310x	3.069	3.1	3.131	3.007	3.1	3.193	0.19	0.30
NR1600xx320x	3.168	3.2	3.232	3.104	3.2	3.296	0.19	0.30
NR1600xx330x	3.267	3.3	3.333	3.201	3.3	3.399	0.18	0.29
NR1600xx340x	3.366	3.4	3.434	3.298	3.4	3.502	0.18	0.29
NR1600xx350x	3.465	3.5	3.535	3.395	3.5	3.605	0.18	0.29
NR1600xx360x	3.564	3.6	3.636	3.492	3.6	3.708	0.18	0.29

Above parameters are all tested under the condition of $T_j \approx T_a$ = 25 °C.

■ TYPICAL APPLICATION CIRCUIT

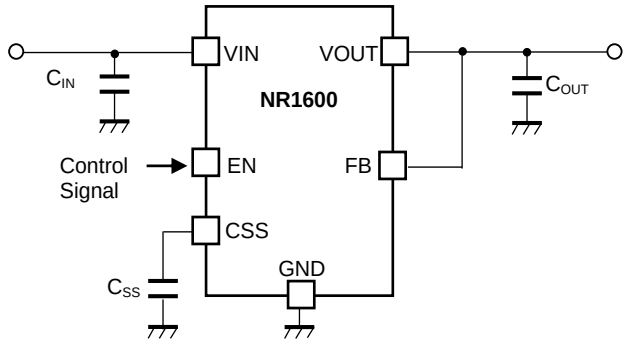

NR1600xxxxxA/D
(Fixed Output Voltage Type)

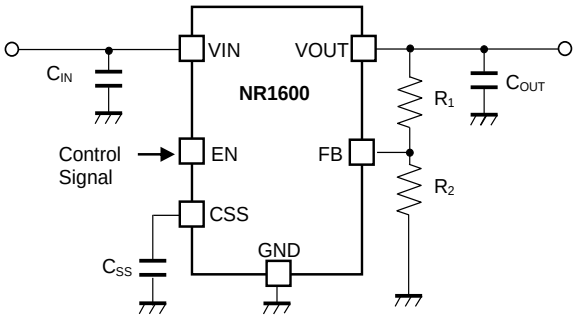

NR1600xx000A/D
(Adjustable Output Voltage Type)

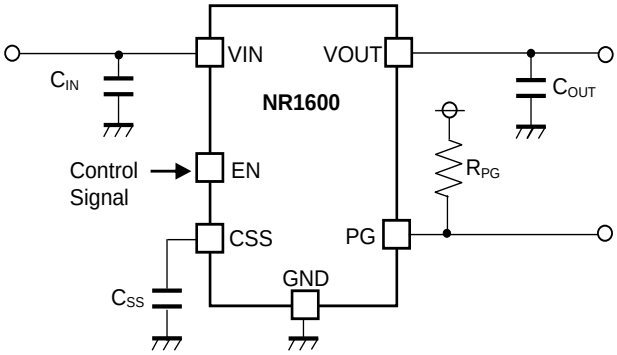

NR1600xxxxxB/E
(Fixed Output Voltage Type)

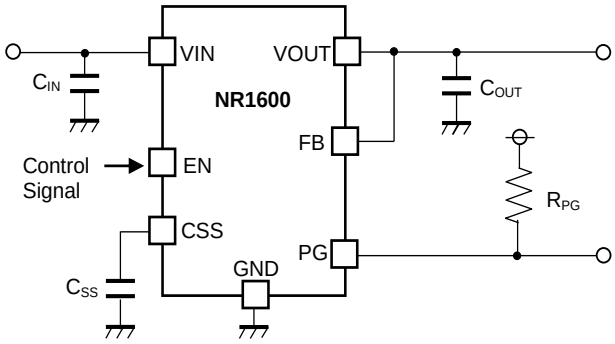

NR1600ACxxxC/F
(Fixed Output Voltage Type)

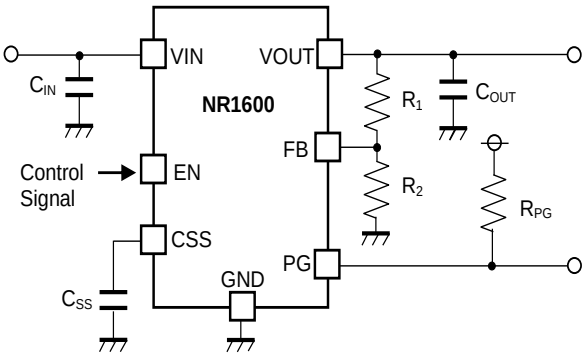

NR1600AC000C/F
(Adjustable Output Voltage Type)

EXTERNAL COMPONENTS INFORMATION

Input Capacitor (C_{IN})

The NR1600 is designed to be stable with a minimum capacitance of 1.0 µF at the VIN pin. Ceramic capacitors with very low ESR (Equivalent Series Resistance) and ESL and good temperature characteristics such as X5R or X7R type may be used. However, in cases where a long wire is used to connect a power supply to the input of the NR1600, due to the inductance of the wire forming an LC tank circuit with the input capacitor. The self-inductance, or isolated inductance, of a wire is directly proportional to its length. The most effective way to reduce overall inductance is to place the capacitor in very close proximity between VIN pin and GND. (We recommend voltage rating of the capacitor is 6.3 V or more if the ceramic capacitors are used.)

Output Capacitor (C_{OUT})

The NR1600's design is stable with a wide range of output capacitors (C_{OUT}) but is optimized for low ESR ceramic capacitors.

The output capacitor's ESR affects stability, most notably with small value capacitors. Use at least a minimum output capacitor as shown in the table below with an ESR of 10 Ω or less to prevent oscillations.

Consider to the use of ceramic capacitors. Manufacturers make ceramic capacitors with a variety of dielectrics, each with a different behavior across temperature and applied voltage (DC bias). The most common dielectrics are Z5U, Y5V, X5R and X7R. The Z5U and Y5V dielectrics are provide high C-V products in a small package at low cost but exhibit strong voltage and temperature coefficients. The X5R and X7R dielectrics yield highly stable characteristics and are more suitable for use as the output capacitor at fractionally increased cost. The X5R and X7R dielectrics both exhibit excellent voltage coefficient characteristics. The X7R type works over a larger temperature range and exhibits better temperature stability whereas X5R is less expensive and is available in higher values. We recommend placing the output capacitor in very close proximity between VOUT pin and GND pin.

Set Output Voltage vs. Minimum Effective Capacitance

Set Output Voltage (V_{SET})	Minimum Effective Capacitance (C_{OUT})
1.0 V ≤ V_{SET} < 1.8 V	0.7 µF
1.8 V ≤ V_{SET} < 3.6 V	0.6 µF
3.6 V ≤ V_{SET} ≤ 4.8 V *	0.5 µF

*Applied to the output voltage range of V_{SET} > 3.6V by adjustable type

External Resistors for Adjustable Output Voltage (NR1600xx000A/C/D/F)

As shown in the figure below, the output voltage is set by the ratio of two external resistors. The device regulated the output to maintain the FB pin voltage at 1.0 V referenced to ground. Use the formula shown below to calculate output voltage.

The NR1600's adjustable output voltage range is 1.0 V to 4.8 V.

$V_{SET} = V_{FB} \times (R_1 + R_2) / R_2 + V_{FB} \times R_1 / R_{IC}$ V_{FB} = 1.0 V (Typ.) R_{IC} = 260 kΩ (Typ.)

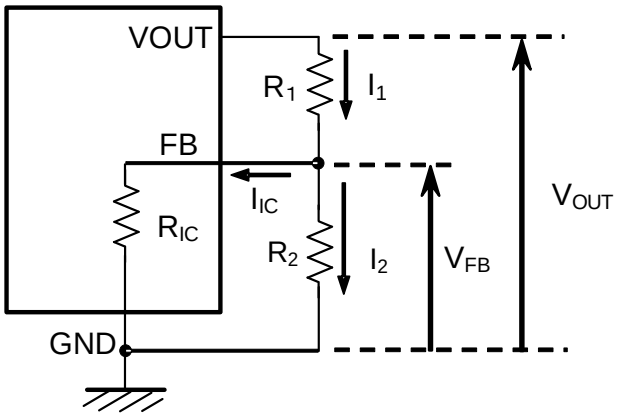

Adjustable Output Voltage R_1,R_2 connection diagram

Adjustable Output Voltage vs. R_1/ R_2 (For adjustable output type)

Set Output Voltage(V_{SET})	R_1	R_2
V_{SET} = 1.0 V	0 (wired between FB pin and VOUT pin)	none
1.0 V < V_{SET} ≤ 4.8 V	$R_2 \times R_{IC} / (R_2 + R_{IC}) \times (V_{SET} / V_{FB} - 1)$	≤ 16 kΩ

Choose a suitable R_2, calculate R_1.

An error of the output voltage (V_{OUT}) due to the internal resistance (R_{IC}) between FB pin and GND pin is calculated by $V_{FB} \times R_1 / R_{IC}$, If $R_1 << R_{IC}$ is true, the error can be reduced, however small R_1 value determines a small R_2 value, and invalid current $I_2 = V_{FB} / R_2$ increases.

■ BLOCK DIAGRAMS

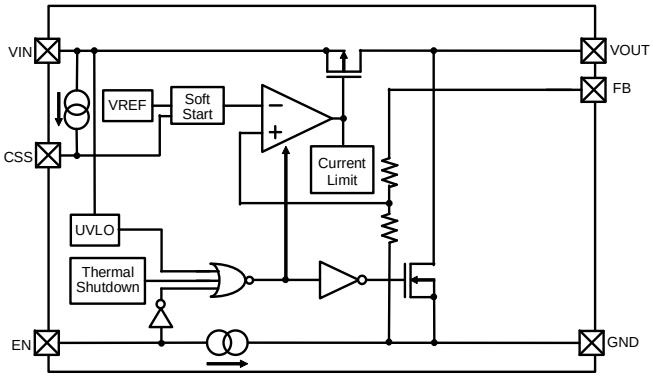

NR1600GKxxxA / NR1600DDxxxA

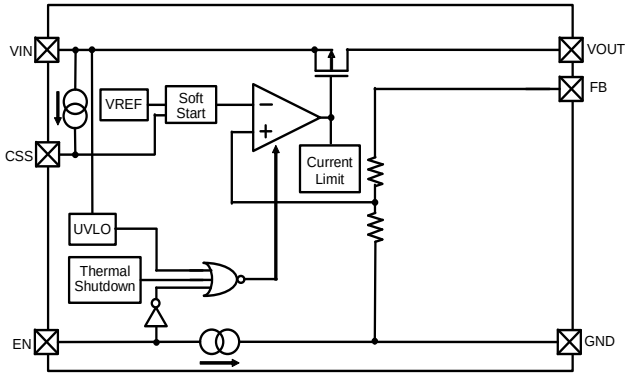

NR1600GKxxxD / NR1600DDxxxD

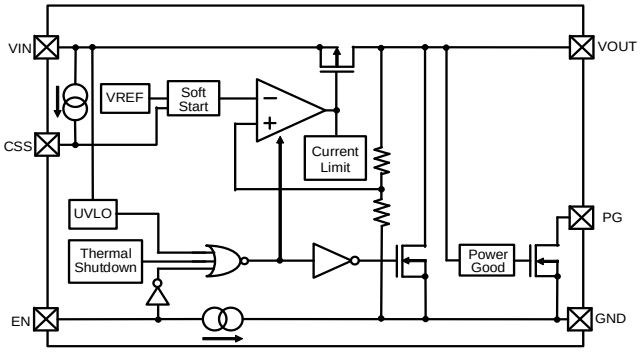

NR1600GKxxxB / NR1600DDxxxB

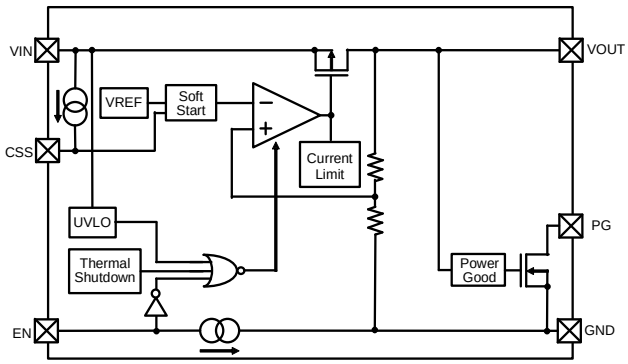

NR1600GKxxxE / NR1600DDxxxE

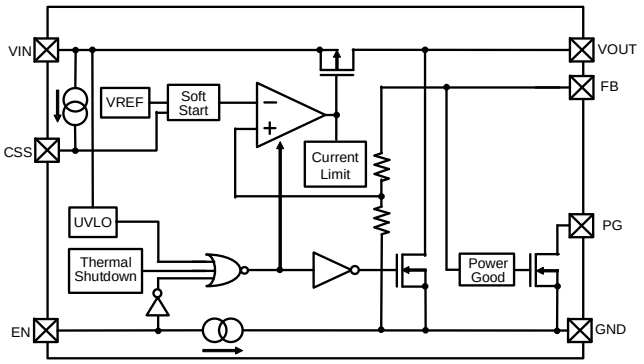

NR1600ACxxxC

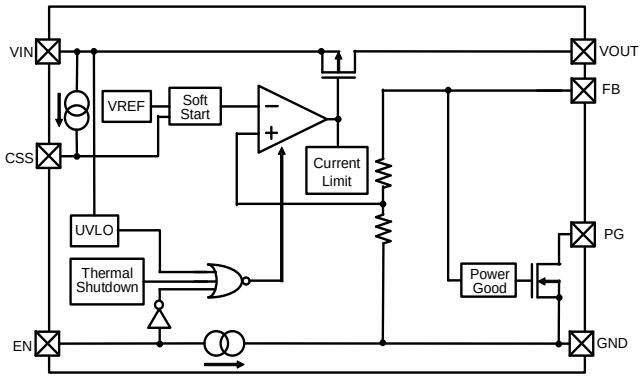

NR1600ACxxxF

■ THEORY OF OPERATION

Enable Function

Forcing above designated "High" voltage to EN pin, the NR1600 becomes active. Forcing below designated "Low" voltage to EN pin shuts down the NR1600. The EN pin is pulled down with a constant current of Typ.0.25 µA inside the IC. In shutdown condition, all functions are disabled except Discharge function. (Option) With Discharge option, the FET to discharge the output capacitor turns on and the output is pulled down to GND. Without Discharge option, the output becomes "Hi-Z". EN pin can accept input range voltage regardless of the input of VIN pin. If Enable function is not necessary, tie EN pin to VIN pin or other designated "High" voltage node at start-up.

Discharge Function (NR1600xxxxxA/B/C)

When turned off, the output voltage drops rapidly to near 0 V by discharging the charge stored in the output capacitor through the FET connected between the VOUT and GND pins. The discharge function is enabled when the EN pin = "Low" or the thermal shutdown detection. This function is effective when the input voltage aboves the minimum recommended operating voltage. On-resistance of the FET is Typ.32 Ω (V_{IN} = 4.0 V).

Thermal Shutdown

When the junction temperature exceeds the thermal shutdown detection temperature (Typ.165 °C), this IC cuts off the output and suppresses the self-heating. When the junction temperature falls below the thermal shutdown release temperature (Typ.130 °C), this IC will restart with the Soft-start operation.

Under Voltage Lockout (UVLO) Circuit

When the input voltage (V_{IN}) becomes lower than the minimum recommended operating input voltage, the operation of the
IC is halt and the NR1600 is protected. Specially, when the input voltage (V_{IN}) becomes lower than the UVLO Detection Voltage ($V_{UVLODET}$, Min. 0.7 V), the output voltage is shut down. In the NR1600xxxxxA/B/C with output discharge function at off state, the output voltage (V_{OUT}) is discharged by the built-in discharge FET. To restart the operation, the input voltage (V_{IN}) must be higher than UVLO Release Voltage ($V_{UVLOREL}$, Max.1.4 V).

Soft-start Function

CSS pin charge current (I_{CSS}, Typ. 3.2 µA) and the capacitor (Css) on the CSS pin make a ramp up slope of the output voltage of the NR1600. The Soft-start duration (t_{SS} , V_{OUT} 10 % to 90 %) is defined as the equation below. When the input voltage (V_{IN}) is in the range of recommended operating condition, pulling EN pin "High" turns the output on after the output delay time(t_D) with Soft-start. If pulling EN pin “High” prior to the forcing the input voltage (V_{IN}), Soft-start timer starts from the UVLO release voltage ($V_{UVLOREL}$). Once Soft-start timer starts, according to the capacitor on (C_{SS}) pin, the output voltage (V_{OUT}) ramps up with duration of t_{SS} / 0.8.

Soft-start Time (t_{SS} , V_{OUT} 10 % to 90 %)

$t_{SS} = 0.44 \times C_{SS} / I_{CSS}$
I_{CSS} : CSS pin charge current Typ. 3.2 µA

Calculation Example:
C_{SS} : Effective Capacitance Typ. 6.8 nF
t_{SS} : Soft-start time Typ. 1 ms (C_{SS} = 6.8 nF)

Considering the error of this formula above, minimum Css is 0.68nF.

Total Ramp-up Time with Soft-start (t_{ON1})

$t_{ON1} = t_D + t_{SS} / 0.8$
t_D : Output Delay Time Typ. 100 µs

If you do not want to use the Soft-start function, CSS should be left open.
In this case, the total ramp-up time is the output delay time (t_D , Typ.100 µs) + V_{SET} × 6.25 s(C_{IN} = C_{OUT} = 1 µF).

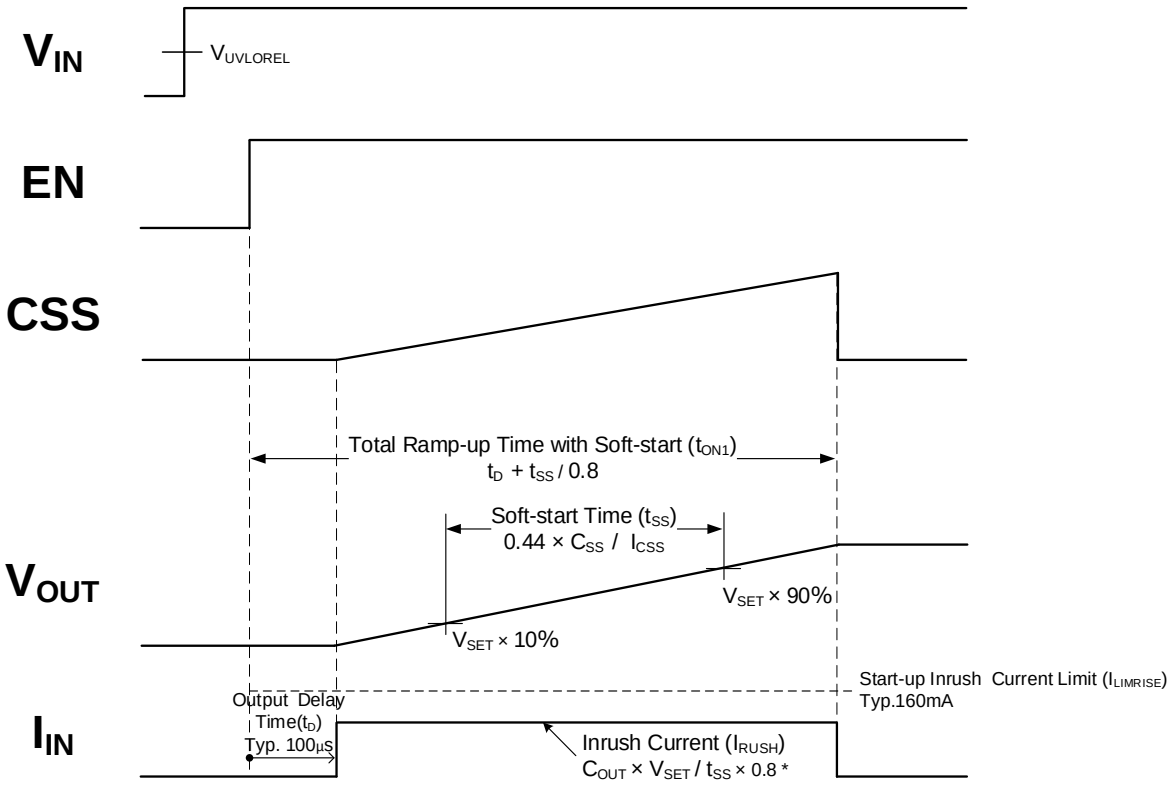

Timing Chart ; Start-Up

* Refer to the item of Inrush Current Suppression Function.

Inrush Current Suppression Function

Inrush current (I_{RUSH}) increases proportional to the output capacitance value of Output capacitor (C_{OUT}). This value is suppressed with start-up inrush current limit ($I_{LIMRISE}$,Typ.160 mA) by the inrush current suppression function of this IC.

The inrush current (I_{RUSH}) can be calculated by using the following formula:

$$I_{RUSH} = I_{CHG} + I_{LOAD} = (C_{OUT} \times V_{SET} / t_{SS} \times 0.8) + I_{LOAD}$$

I_{CHG} : Charge current for the output capacitor
I_{LOAD} : Load current

If inrush current (I_{RUSH}) reaches the start-up inrush current limit (I_{LIMISE},Typ.160 mA), the total ramp up time becomes longer than the Soft-start time(t_{SS}).
This function continues until the output voltage reaches the Set output voltage (V_{SET}).

Ramp-up time with inrush suppression function (t_{ON2})

$$t_{ON2} = t_D + C_{OUT} \times V_{SET} / (I_{LIMRISE} - I_{LOAD})$$

V_{SET} : Set Output Voltage
t_D : Output Delay Time Typ.100 µs
$I_{LIMRISE}$: Typ.160 mA

During the start-up duration, if the load current (I_{LOAD}) is beyond the start-up inrush current limit ($I_{LIMRISE}$), the output voltage cannot reach the set output voltage.
During the Soft-start, UVLO function and thermal shutdown function are active. Large current start-up or large capacitance Output capacitor (C_{OUT}) is used with, those protection function may work. In such a case, increase the external capacitance value (C_{SS}) and make the Soft-start time be longer to suppress the inrush current and abnormal heat.

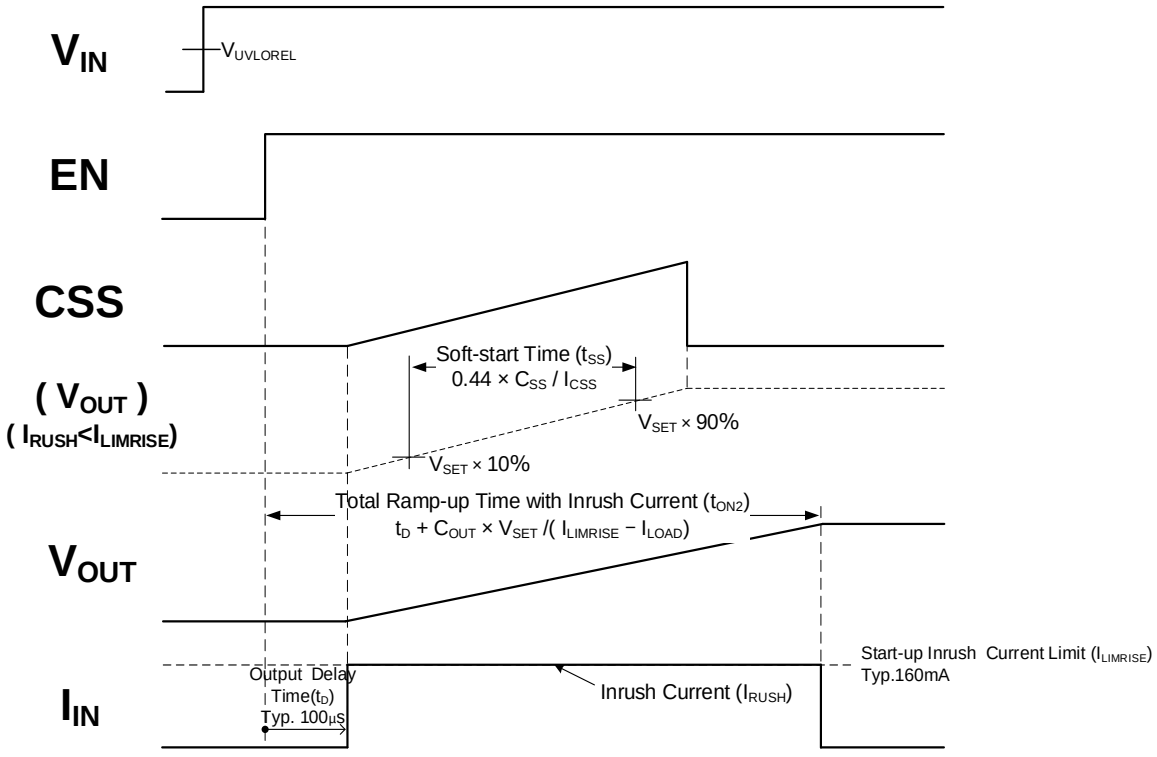

Timing Chart ; Start-up inrush current is larger than the start-up inrush current limit

Power-Good Function (NR1600xxxxxB/C/E/F)

Output voltage (V_{OUT})* is monitored, NMOS open-drain output PG pin is pulled to ground when the output voltage (V_{OUT}) is less than the PG “L” threshold. After the Soft-start and finished ramp-up completely, after the PG “H” delay time (Typ. 50 µs), PG signal is pulled up “High”. After that, if the output voltage (V_{OUT}) becomes less than PG “L” threshold (V_{PGL}, Typ. 86 % × V_{SET}), PG signal is pulled down to “Low”. Further, when the output voltage (V_{OUT}) is resumed more than PG ”H” threshold (V_{PGH} , Typ. 91 % × V_{SET}), after the delay time (Typ. 50 µs), PG signal is pulled up “High” again.

* NR1600xxxxxB/C/E/F, Output voltage (V_{OUT}) refers to FB pin voltage (V_{FB})

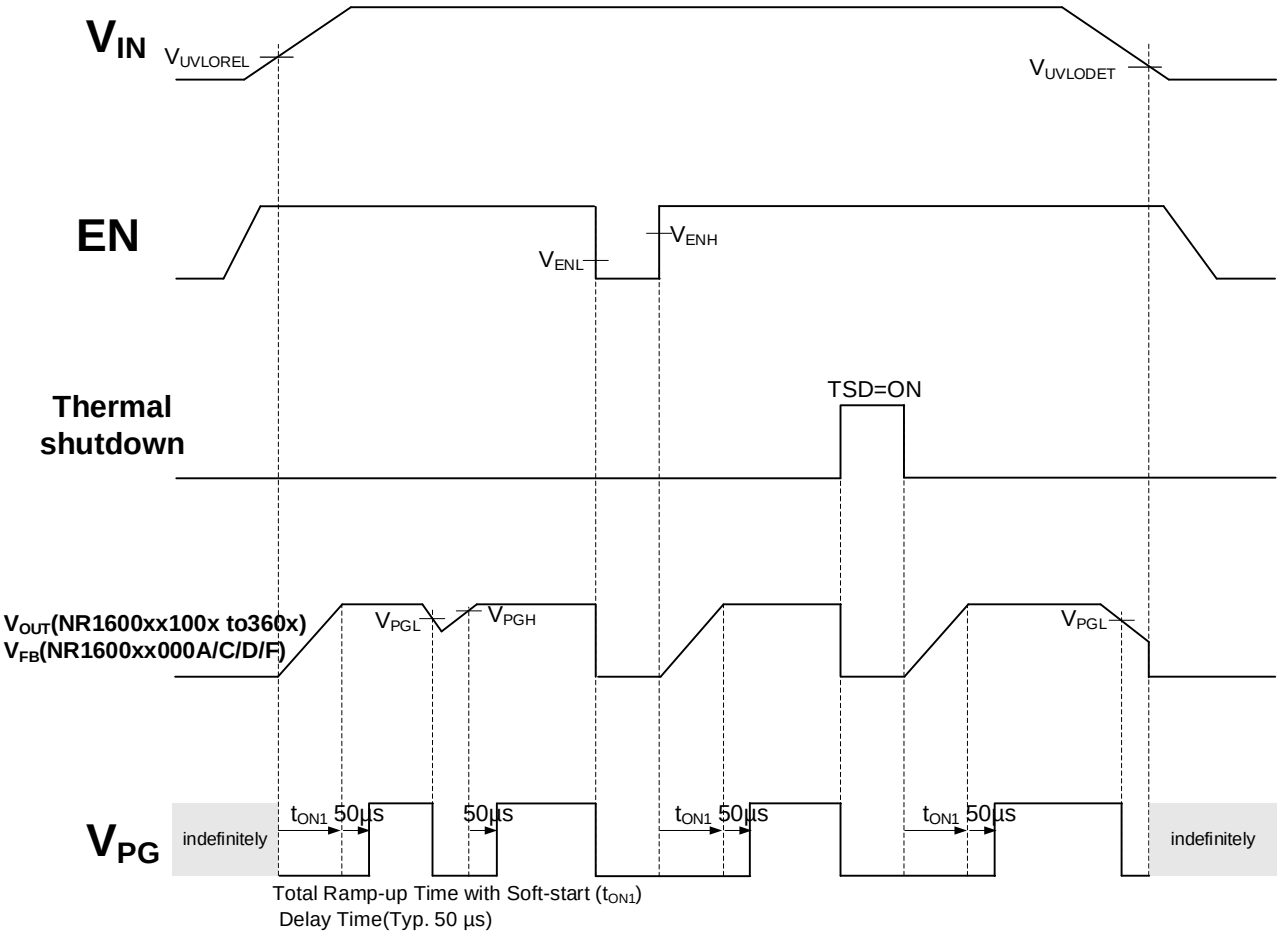

Timing Chart ; Power-Good Function

When the input voltage (V_{IN}) is within the recommended operation condition, if EN pin is pulled "Low", or thermal shutdown is detected, regardless of the output voltage (V_{OUT}), PG signal is pulled down to "Low". The recommendation value of the pull up resistance (R_{PG}) is 10 kΩ to 100 kΩ. If Power-Good function is not necessary, PG pin should be left open or tied to GND.

THERMAL CHARACTERISTICS (DFN1212-6-GK)

Thermal characteristics depend on mounting conditions. The thermal characteristics below are the results of measurements under measurement conditions determined by our company with reference to JEDEC STD. (JESD51).

Measurement Result

Item	Measurement Result
Thermal Resistance (θja)	64 °C/W
Thermal Characterization Parameter (ψjt)	22 °C/W

θja : Junction-to-Ambient Thermal Resistance
ψjt : Junction-to-Top Thermal Characterization Parameter

Measurement Conditions

Item		Specification
Measurement Condition		Mounting on Board (Still Air)
Board material		FR-4
Board size		76.2 mm × 114.3 mm × t 0.8 mm
Copper foil layer	1	50 mm × 50 mm (coverage rate 95%), t 0.075 mm
	2	50 mm × 50 mm (coverage rate 100%), t 0.035 mm
	3	50 mm × 50 mm (coverage rate 100%), t 0.035 mm
	4	50 mm × 50 mm (coverage rate 100%), t 0.075 mm
Thermal vias		ϕ 0.2 mm × 25 pcs

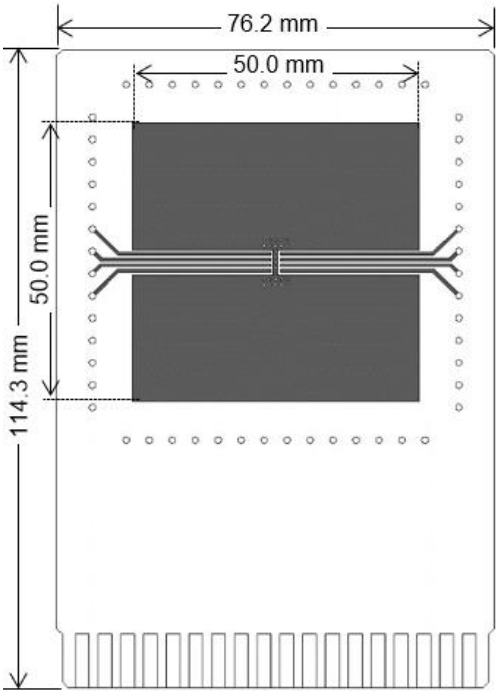

Measurement Board Pattern

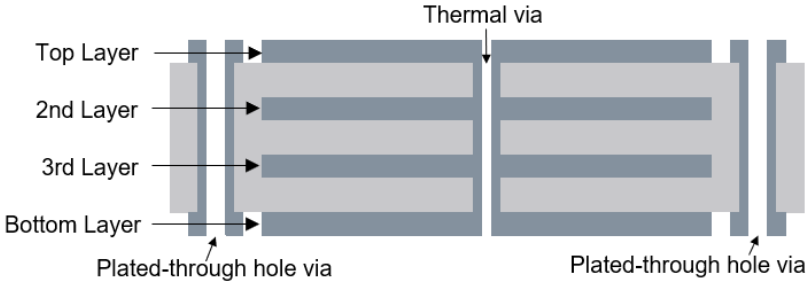

Cross section view of layers and vias

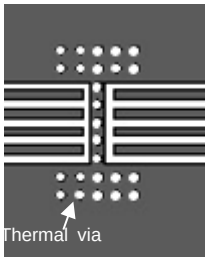

Enlarged view of IC mounting area

● CALCULATION METHOD OF JUNCTION TEMPERATURE

The junction temperature (T_j) can be calculated from the following formula.

$T_j = T_a + \theta ja \times P$
$T_j = T_c\ (top) + \psi jt \times P$

T_a: Ambient temperature
T_c (top): Package mark side center temperature
$P = (V_{IN} - V_{OUT}) \times I_{OUT}$ (Power consumption under user's conditions.)

THERMAL CHARACTERISTICS (SOT-23-6-DD)

Thermal characteristics depend on mounting conditions. The thermal characteristics below are the results of measurements under measurement conditions determined by our company with reference to JEDEC STD. (JESD51).

Measurement Result

Item	Measurement Result
Thermal Resistance (θja)	150 °C/W
Thermal Characterization Parameter (ψjt)	51 °C/W

θja : Junction-to-Ambient Thermal Resistance
ψjt : Junction-to-Top Thermal Characterization Parameter

Measurement Conditions

Item		Specification
Measurement Condition		Mounting on Board (Still Air)
Board material		FR-4
Board size		76.2 mm × 114.3 mm × t 0.8 mm
Copper foil layer	1	50 mm × 50 mm (coverage rate 95%), t 0.040 mm
	2	50 mm × 50 mm (coverage rate 100%), t 0.035 mm
	3	50 mm × 50 mm (coverage rate 100%), t 0.035 mm
	4	50 mm × 50 mm (coverage rate 100%), t 0.040 mm
Thermal vias		ϕ 0.3 mm × 7 pcs

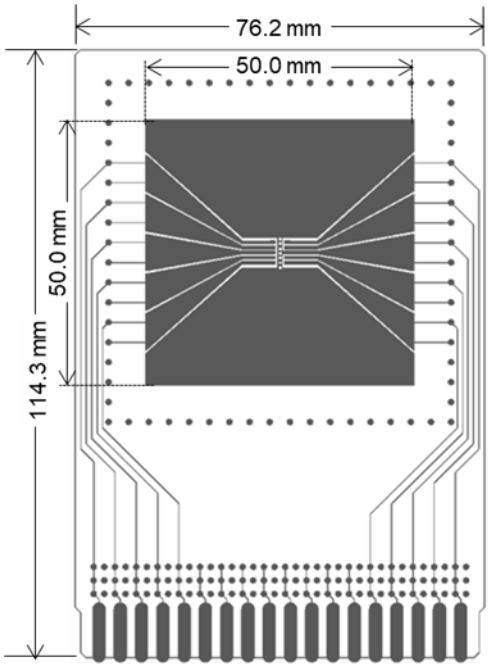

Measurement Board Pattern

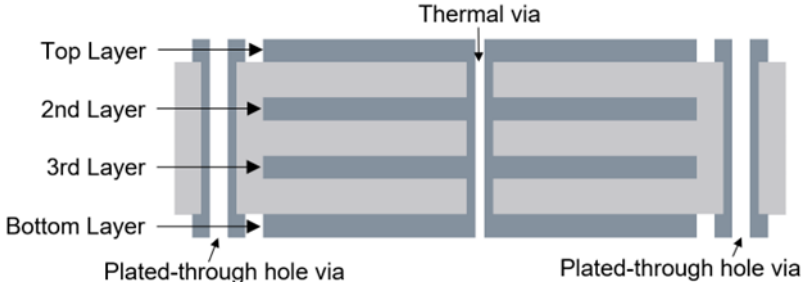

Cross section view of layers and vias

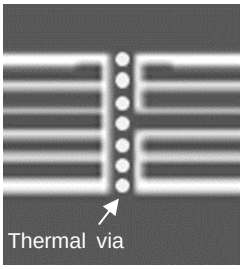

Enlarged view of IC mounting area

● CALCULATION METHOD OF JUNCTION TEMPERATURE

The junction temperature (T_j) can be calculated from the following formula.

$$T_j = T_a + \theta ja \times P$$
$$T_j = T_c\,(top) + \psi jt \times P$$

T_a: Ambient temperature
T_c (top): Package mark side center temperature
$P = (V_{IN} - V_{OUT}) \times I_{OUT}$ (Power consumption under user's conditions.)

THERMAL CHARACTERISTICS (HSOP-8-AC)

Thermal characteristics depend on mounting conditions. The thermal characteristics below are the results of measurements under measurement conditions determined by our company with reference to JEDEC STD. (JESD51).

Measurement Result

Item	Measurement Result
Thermal Resistance (θja)	34.5 °C/W
Thermal Characterization Parameter (ψjt)	10 °C/W

θja : Junction-to-Ambient Thermal Resistance
ψjt : Junction-to-Top Thermal Characterization Parameter

Measurement Conditions

Item		Specification
Measurement Condition		Mounting on Board (Still Air)
Board material		FR-4
Board size		76.2 mm × 114.3 mm × t 0.8 mm
Copper foil layer	1	50 mm × 50 mm (coverage rate 95%), t 0.040 mm
	2	50 mm × 50 mm (coverage rate 100%), t 0.035 mm
	3	50 mm × 50 mm (coverage rate 100%), t 0.035 mm
	4	50 mm × 50 mm (coverage rate 100%), t 0.040 mm
Thermal vias		ϕ 0.3 mm × 21 pcs

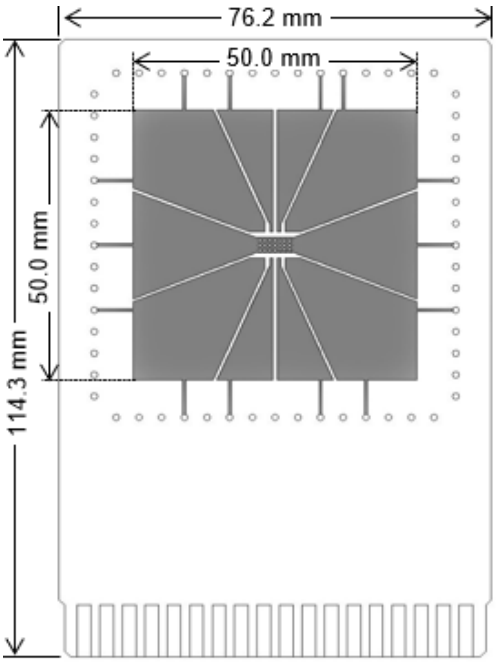

Measurement Board Pattern

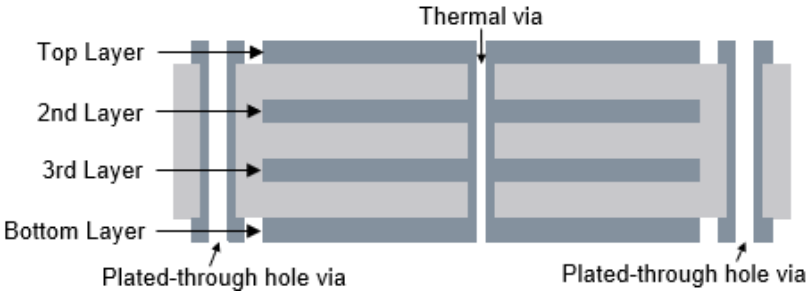

Cross section view of layers and vias

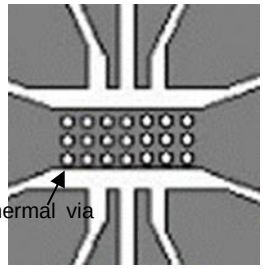

Enlarged view of IC mounting area

● CALCULATION METHOD OF JUNCTION TEMPERATURE

The junction temperature (T_j) can be calculated from the following formula.

$$T_j = T_a + \theta ja \times P$$
$$T_j = T_c\,(top) + \psi jt \times P$$

T_a: Ambient temperature
T_c (top): Package mark side center temperature
$P = (V_{IN} - V_{OUT}) \times I_{OUT}$ (Power consumption under user's conditions.)

■ MARKING SPECIFICATION (DFN1212-6)

①② : Product Code … Refer to *Part Marking List*
③④ : Lot Number … Alphanumeric Serial Number

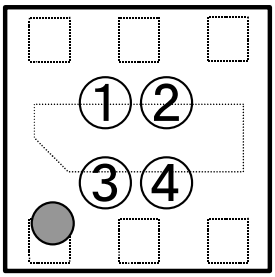

DFN1212-6 Part Markings

NOTICE
There can be variation in the marking when different AOI (Automated Optical Inspection) equipment is used. In the case of recognizing the marking characteristic with AOI, please contact our sales or distributor before attempting to use AOI.

NR1600GKxxxxE4S Marking List

Product Code	①	②
NR1600GK000AE4S	G	A
NR1600GK100AE4S	G	B
NR1600GK110AE4S	G	C
NR1600GK120AE4S	G	D
NR1600GK130AE4S	G	E
NR1600GK140AE4S	G	F
NR1600GK150AE4S	G	G
NR1600GK160AE4S	G	H
NR1600GK170AE4S	G	J
NR1600GK180AE4S	G	K
NR1600GK190AE4S	G	L
NR1600GK200AE4S	G	M
NR1600GK210AE4S	G	N
NR1600GK220AE4S	G	P
NR1600GK230AE4S	G	R
NR1600GK240AE4S	G	S
NR1600GK250AE4S	G	T
NR1600GK260AE4S	G	U
NR1600GK270AE4S	G	V
NR1600GK280AE4S	G	W
NR1600GK290AE4S	G	X
NR1600GK300AE4S	G	Y
NR1600GK310AE4S	G	Z
NR1600GK320AE4S	H	A
NR1600GK330AE4S	H	B
NR1600GK340AE4S	H	C
NR1600GK350AE4S	H	D
NR1600GK360AE4S	H	E

Product Code	①	②
NR1600GK100BE4S	H	F
NR1600GK110BE4S	H	G
NR1600GK120BE4S	H	H
NR1600GK130BE4S	H	J
NR1600GK140BE4S	H	K
NR1600GK150BE4S	H	L
NR1600GK160BE4S	H	M
NR1600GK170BE4S	H	N
NR1600GK180BE4S	H	P
NR1600GK190BE4S	H	R
NR1600GK200BE4S	H	S
NR1600GK210BE4S	H	T
NR1600GK220BE4S	H	U
NR1600GK230BE4S	H	V
NR1600GK240BE4S	H	W
NR1600GK250BE4S	H	X
NR1600GK260BE4S	H	Y
NR1600GK270BE4S	H	Z
NR1600GK280BE4S	J	A
NR1600GK290BE4S	J	B
NR1600GK300BE4S	J	C
NR1600GK310BE4S	J	D
NR1600GK320BE4S	J	E
NR1600GK330BE4S	J	F
NR1600GK340BE4S	J	G
NR1600GK350BE4S	J	H
NR1600GK360BE4S	J	J

NR1600GKxxxxE4S Marking List

Product Code	①	②
NR1600GK000DE4S	K	A
NR1600GK100DE4S	K	B
NR1600GK110DE4S	K	C
NR1600GK120DE4S	K	D
NR1600GK130DE4S	K	E
NR1600GK140DE4S	K	F
NR1600GK150DE4S	K	G
NR1600GK160DE4S	K	H
NR1600GK170DE4S	K	J
NR1600GK180DE4S	K	K
NR1600GK190DE4S	K	L
NR1600GK200DE4S	K	M
NR1600GK210DE4S	K	N
NR1600GK220DE4S	K	P
NR1600GK230DE4S	K	R
NR1600GK240DE4S	K	S
NR1600GK250DE4S	K	T
NR1600GK260DE4S	K	U
NR1600GK270DE4S	K	V
NR1600GK280DE4S	K	W
NR1600GK290DE4S	K	X
NR1600GK300DE4S	K	Y
NR1600GK310DE4S	K	Z
NR1600GK320DE4S	L	A
NR1600GK330DE4S	L	B
NR1600GK340DE4S	L	C
NR1600GK350DE4S	L	D
NR1600GK360DE4S	L	E

Product Code	①	②
NR1600GK100EE4S	L	F
NR1600GK110EE4S	L	G
NR1600GK120EE4S	L	H
NR1600GK130EE4S	L	J
NR1600GK140EE4S	L	K
NR1600GK150EE4S	L	L
NR1600GK160EE4S	L	M
NR1600GK170EE4S	L	N
NR1600GK180EE4S	L	P
NR1600GK190EE4S	L	R
NR1600GK200EE4S	L	S
NR1600GK210EE4S	L	T
NR1600GK220EE4S	L	U
NR1600GK230EE4S	L	V
NR1600GK240EE4S	L	W
NR1600GK250EE4S	L	X
NR1600GK260EE4S	L	Y
NR1600GK270EE4S	L	Z
NR1600GK280EE4S	M	A
NR1600GK290EE4S	M	B
NR1600GK300EE4S	M	C
NR1600GK310EE4S	M	D
NR1600GK320EE4S	M	E
NR1600GK330EE4S	M	F
NR1600GK340EE4S	M	G
NR1600GK350EE4S	M	H
NR1600GK360EE4S	M	J

■ MARKING SPECIFICATION (SOT-23-6-DD)

①②③ : Product Code … Refer to *Part Marking List*
④⑤ : Lot Number … Alphanumeric Serial Number

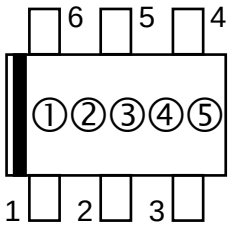

SOT-23-6-DD Part Markings

NOTICE
There can be variation in the marking when different AOI (Automated Optical Inspection) equipment is used. In the case of recognizing the marking characteristic with AOI, please contact RICOH sales or our distributor before attempting to use AOI.

NR1600DDxxxx Marking List

Product Code	① ② ③
NR1600DD000A	1 0 A
NR1600DD100A	1 0 B
NR1600DD110A	1 0 C
NR1600DD120A	1 0 D
NR1600DD130A	1 0 E
NR1600DD140A	1 0 F
NR1600DD150A	1 0 G
NR1600DD160A	1 0 H
NR1600DD170A	1 0 J
NR1600DD180A	1 0 K
NR1600DD190A	1 0 L
NR1600DD200A	1 0 M
NR1600DD210A	1 0 N
NR1600DD220A	1 0 P
NR1600DD230A	1 0 R
NR1600DD240A	1 0 S
NR1600DD250A	1 0 T
NR1600DD260A	1 0 U
NR1600DD270A	1 0 V
NR1600DD280A	1 0 W
NR1600DD290A	1 0 X
NR1600DD300A	1 0 Y
NR1600DD310A	1 0 Z
NR1600DD320A	1 1 A
NR1600DD330A	1 1 B
NR1600DD340A	1 1 C
NR1600DD350A	1 1 D
NR1600DD360A	1 1 E

Product Code	① ② ③
NR1600DD100B	1 2 A
NR1600DD110B	1 2 B
NR1600DD120B	1 2 C
NR1600DD130B	1 2 D
NR1600DD140B	1 2 E
NR1600DD150B	1 2 F
NR1600DD160B	1 2 G
NR1600DD170B	1 2 H
NR1600DD180B	1 2 J
NR1600DD190B	1 2 K
NR1600DD200B	1 2 L
NR1600DD210B	1 2 M
NR1600DD220B	1 2 N
NR1600DD230B	1 2 P
NR1600DD240B	1 2 R
NR1600DD250B	1 2 S
NR1600DD260B	1 2 T
NR1600DD270B	1 2 U
NR1600DD280B	1 2 V
NR1600DD290B	1 2 W
NR1600DD300B	1 2 X
NR1600DD310B	1 2 Y
NR1600DD320B	1 2 Z
NR1600DD330B	1 3 A
NR1600DD340B	1 3 B
NR1600DD350B	1 3 C
NR1600DD360B	1 3 D

NR1600DDxxxx Marking List

Product Code	① ② ③
NR1600DD000D	1 4 A
NR1600DD100D	1 4 B
NR1600DD110D	1 4 C
NR1600DD120D	1 4 D
NR1600DD130D	1 4 E
NR1600DD140D	1 4 F
NR1600DD150D	1 4 G
NR1600DD160D	1 4 H
NR1600DD170D	1 4 J
NR1600DD180D	1 4 K
NR1600DD190D	1 4 L
NR1600DD200D	1 4 M
NR1600DD210D	1 4 N
NR1600DD220D	1 4 P
NR1600DD230D	1 4 R
NR1600DD240D	1 4 S
NR1600DD250D	1 4 T
NR1600DD260D	1 4 U
NR1600DD270D	1 4 V
NR1600DD280D	1 4 W
NR1600DD290D	1 4 X
NR1600DD300D	1 4 Y
NR1600DD310D	1 4 Z
NR1600DD320D	1 5 A
NR1600DD330D	1 5 B
NR1600DD340D	1 5 C
NR1600DD350D	1 5 D
NR1600DD360D	1 5 E

Product Code	① ② ③
NR1600DD100E	1 6 A
NR1600DD110E	1 6 B
NR1600DD120E	1 6 C
NR1600DD130E	1 6 D
NR1600DD140E	1 6 E
NR1600DD150E	1 6 F
NR1600DD160E	1 6 G
NR1600DD170E	1 6 H
NR1600DD180E	1 6 J
NR1600DD190E	1 6 K
NR1600DD200E	1 6 L
NR1600DD210E	1 6 M
NR1600DD220E	1 6 N
NR1600DD230E	1 6 P
NR1600DD240E	1 6 R
NR1600DD250E	1 6 S
NR1600DD260E	1 6 T
NR1600DD270E	1 6 U
NR1600DD280E	1 6 V
NR1600DD290E	1 6 W
NR1600DD300E	1 6 X
NR1600DD310E	1 6 Y
NR1600DD320E	1 6 Z
NR1600DD330E	1 7 A
NR1600DD340E	1 7 B
NR1600DD350E	1 7 C
NR1600DD360E	1 7 D

■ MARKING SPECIFICATION (HSOP-8-AC)

①②③④⑤⑥⑦⑧⑨: Product Code ⋯ Refer to *Part Marking List*
⑩⑪: Lot Number ⋯ Alphanumeric Serial Number

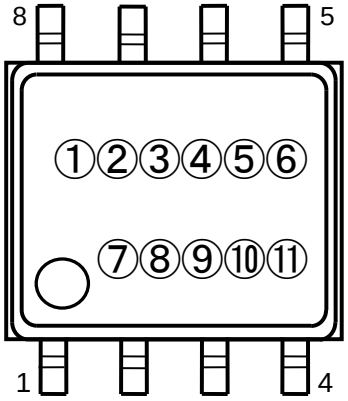

HSOP-8-AC Part Markings

NOTICE
There can be variation in the marking when different AOI (Automated Optical Inspection) equipment is used. In the case of recognizing the marking characteristic with AOI, please contact RICOH sales or our distributor before attempting to use AOI.

NR1600ACxxxxE2S Marking List

Product Code	①②③④⑤⑥⑦⑧⑨
NR1600AC000CE2S	R 1 6 0 0 C 0 0 0
NR1600AC100CE2S	R 1 6 0 0 C 1 0 0
NR1600AC110CE2S	R 1 6 0 0 C 1 1 0
NR1600AC120CE2S	R 1 6 0 0 C 1 2 0
NR1600AC130CE2S	R 1 6 0 0 C 1 3 0
NR1600AC140CE2S	R 1 6 0 0 C 1 4 0
NR1600AC150CE2S	R 1 6 0 0 C 1 5 0
NR1600AC160CE2S	R 1 6 0 0 C 1 6 0
NR1600AC170CE2S	R 1 6 0 0 C 1 7 0
NR1600AC180CE2S	R 1 6 0 0 C 1 8 0
NR1600AC190CE2S	R 1 6 0 0 C 1 9 0
NR1600AC200CE2S	R 1 6 0 0 C 2 0 0
NR1600AC210CE2S	R 1 6 0 0 C 2 1 0
NR1600AC220CE2S	R 1 6 0 0 C 2 2 0
NR1600AC230CE2S	R 1 6 0 0 C 2 3 0
NR1600AC240CE2S	R 1 6 0 0 C 2 4 0
NR1600AC250CE2S	R 1 6 0 0 C 2 5 0
NR1600AC260CE2S	R 1 6 0 0 C 2 6 0
NR1600AC270CE2S	R 1 6 0 0 C 2 7 0
NR1600AC280CE2S	R 1 6 0 0 C 2 8 0
NR1600AC290CE2S	R 1 6 0 0 C 2 9 0
NR1600AC300CE2S	R 1 6 0 0 C 3 0 0
NR1600AC310CE2S	R 1 6 0 0 C 3 1 0
NR1600AC320CE2S	R 1 6 0 0 C 3 2 0
NR1600AC330CE2S	R 1 6 0 0 C 3 3 0
NR1600AC340CE2S	R 1 6 0 0 C 3 4 0
NR1600AC350CE2S	R 1 6 0 0 C 3 5 0
NR1600AC360CE2S	R 1 6 0 0 C 3 6 0

Product Code	①②③④⑤⑥⑦⑧⑨
NR1600AC000FE2S	R 1 6 0 0 F 0 0 0
NR1600AC100FE2S	R 1 6 0 0 F 1 0 0
NR1600AC110FE2S	R 1 6 0 0 F 1 1 0
NR1600AC120FE2S	R 1 6 0 0 F 1 2 0
NR1600AC130FE2S	R 1 6 0 0 F 1 3 0
NR1600AC140FE2S	R 1 6 0 0 F 1 4 0
NR1600AC150FE2S	R 1 6 0 0 F 1 5 0
NR1600AC160FE2S	R 1 6 0 0 F 1 6 0
NR1600AC170FE2S	R 1 6 0 0 F 1 7 0
NR1600AC180FE2S	R 1 6 0 0 F 1 8 0
NR1600AC190FE2S	R 1 6 0 0 F 1 9 0
NR1600AC200FE2S	R 1 6 0 0 F 2 0 0
NR1600AC210FE2S	R 1 6 0 0 F 2 1 0
NR1600AC220FE2S	R 1 6 0 0 F 2 2 0
NR1600AC230FE2S	R 1 6 0 0 F 2 3 0
NR1600AC240FE2S	R 1 6 0 0 F 2 4 0
NR1600AC250FE2S	R 1 6 0 0 F 2 5 0
NR1600AC260FE2S	R 1 6 0 0 F 2 6 0
NR1600AC270FE2S	R 1 6 0 0 F 2 7 0
NR1600AC280FE2S	R 1 6 0 0 F 2 8 0
NR1600AC290FE2S	R 1 6 0 0 F 2 9 0
NR1600AC300FE2S	R 1 6 0 0 F 3 0 0
NR1600AC310FE2S	R 1 6 0 0 F 3 1 0
NR1600AC320FE2S	R 1 6 0 0 F 3 2 0
NR1600AC330FE2S	R 1 6 0 0 F 3 3 0
NR1600AC340FE2S	R 1 6 0 0 F 3 4 0
NR1600AC350FE2S	R 1 6 0 0 F 3 5 0
NR1600AC360FE2S	R 1 6 0 0 F 3 6 0

■ APPLICATION NOTE

● Internal Equivalent Circuit Diagram of Pin

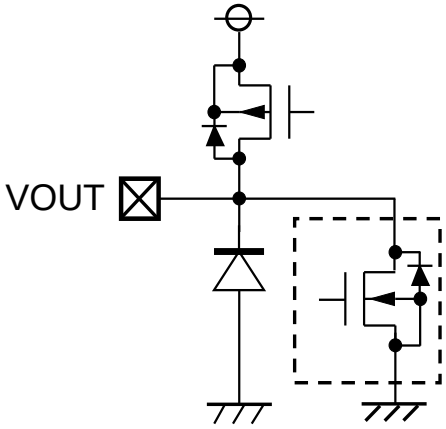

* Dotted frames correspond to (NR1600xxxxxA/B/C).

VOUT pin

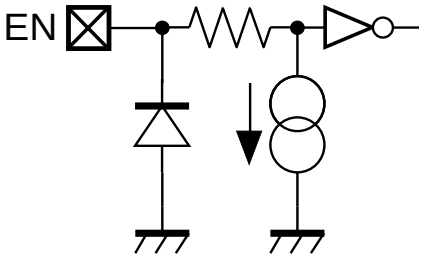

EN pin

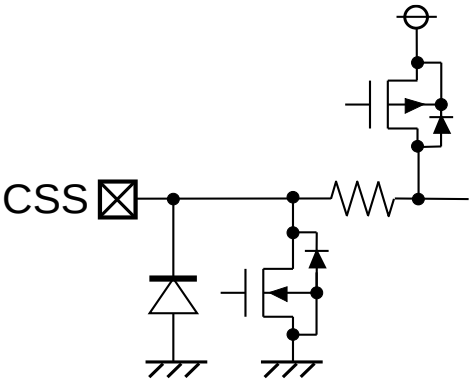

CSS pin

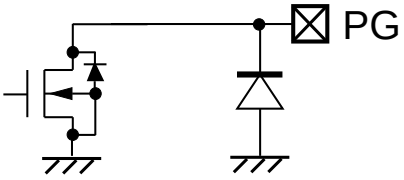

PG pin

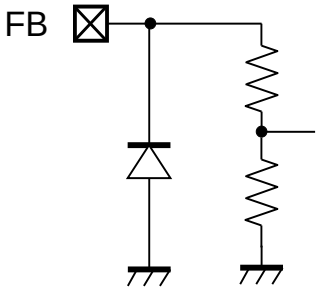

FB pin

● **Evaluation Board / PCB Layout**

NR1600GK

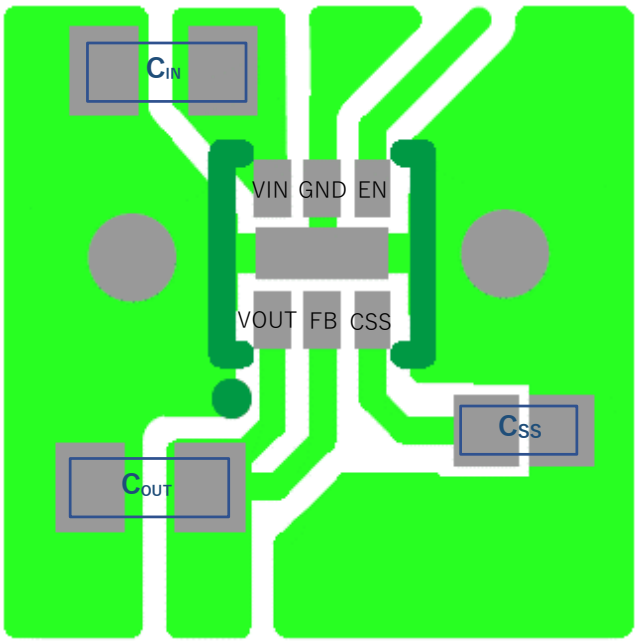

NR1600GKxxxA/D
(Fixed Output Voltage Type)

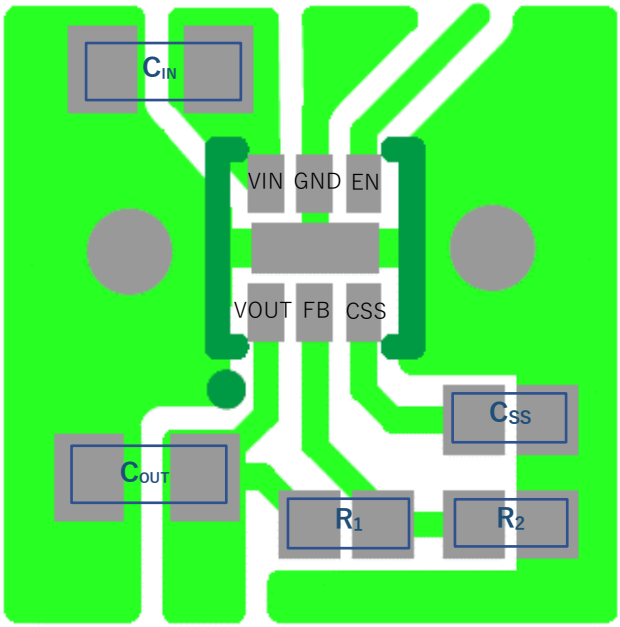

NR1600GK000A/D
(Adjustable Output Voltage Type)

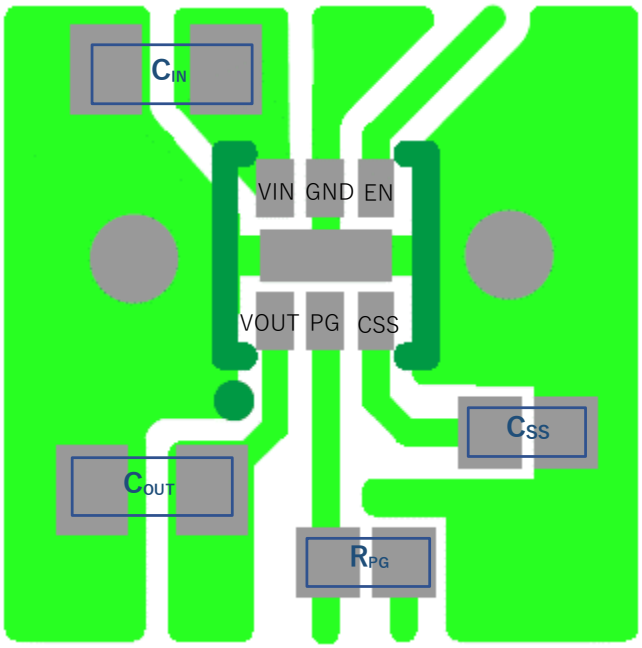

NR1600GKxxxB/E
(Fixed Output Voltage Type)

NR1600DD

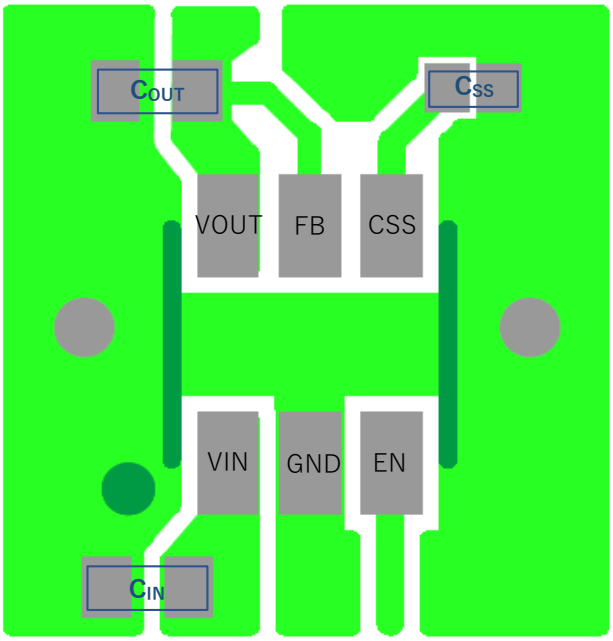

NR1600DDxxxA/D

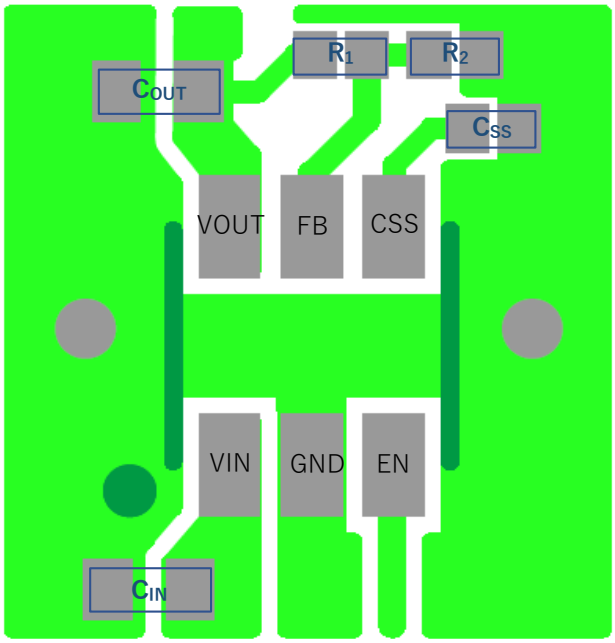

NR1600DD000A/D

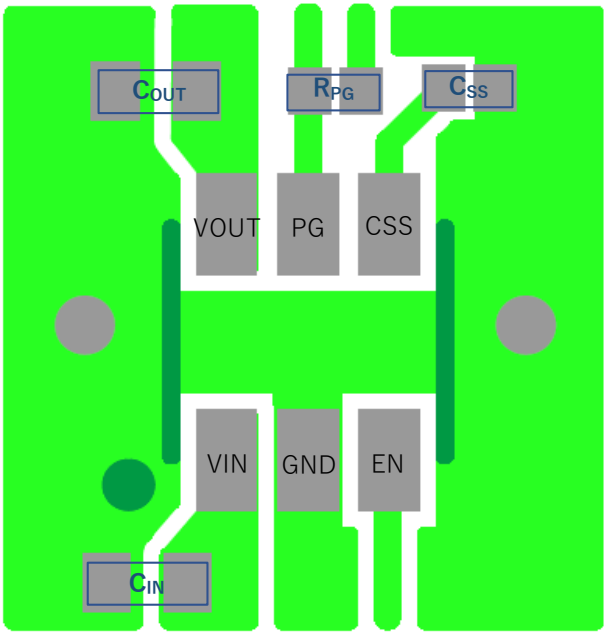

NR1600DDxxxB/E

NR1600AC

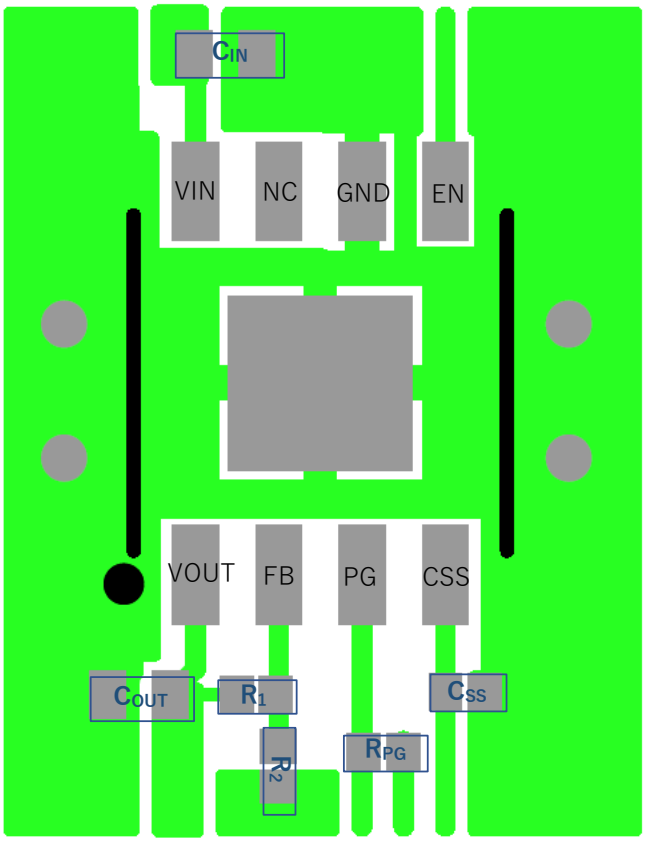

NR1600AC000C/F

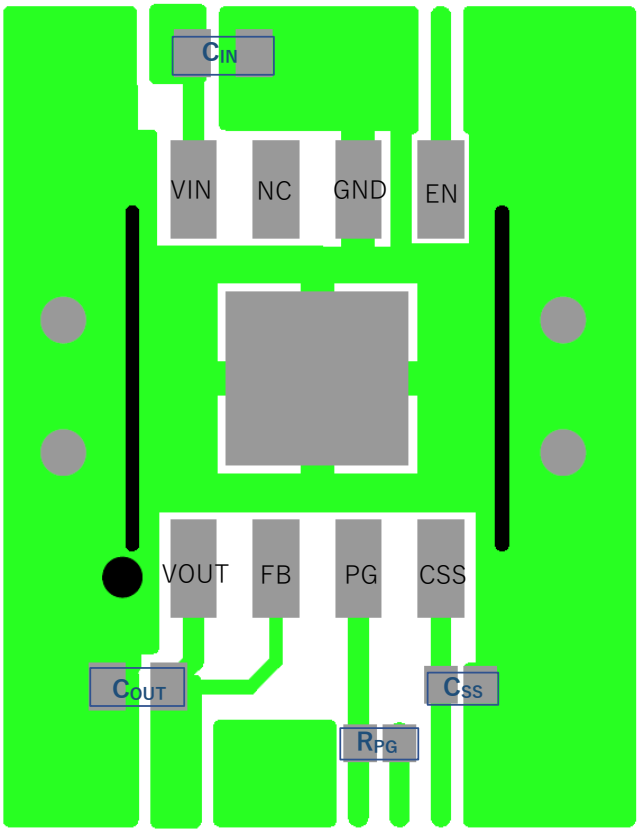

NR1600ACxxxC/F

● TECHNICAL NOTES

The performance of a power source circuit using this device is highly dependent on a peripheral circuit. A peripheral component or the device mounted on PCB should not exceed a rated voltage, a rated current or a rated power. When designing a peripheral circuit, please be fully aware of the following points.

Ensure the VIN and GND lines are sufficiently robust. If their impedances are too high, noise pickup or unstable operation may result. Connect a 1.0 µF or more input capacitor (C_{IN}) between the VIN and GND pins, on the same side as the IC and with shortest-distance wiring.

The thermal shutdown function prevents the IC from fuming and ignition but does not ensure the IC's reliability or keep the IC below the absolute maximum ratings. The thermal shutdown function does not operate on the heat generated by other than the normal IC operation such as latch-up and overvoltage application. The thermal shutdown function operates in a state over the absolute maximum ratings, therefore the thermal shutdown function should not be used for a system design.

The tab on the bottom side of DFN1212-6-GK or HSOP-8-AC is recommended to be connected to GND. It will work even if it is open, but please note that the heat dissipation and mounting strength will decrease.

■ TYPICAL CHARACTERISTICS

Note: Typical Characteristics are intended to be used as reference data; they are not guaranteed.

1) Output Voltage vs Output Current
C_{IN} = 1 µF , C_{OUT} = 1 µF , T_a = 25 °C
NR1600xx120x

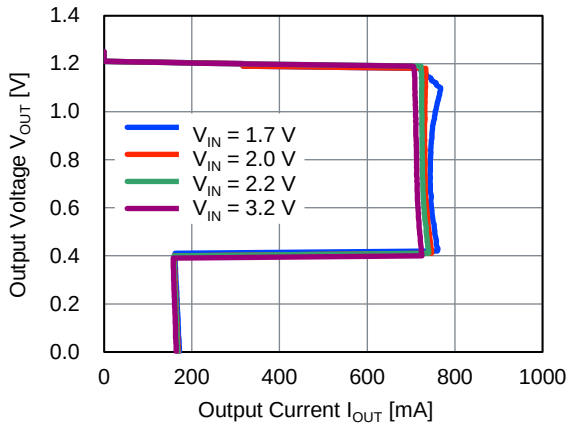

NR1600xx180x

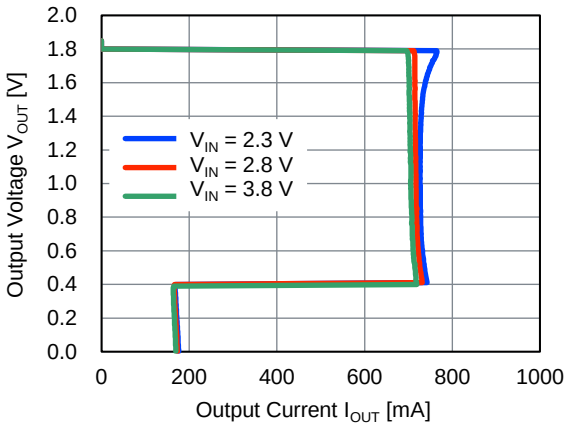

NR1600xx330x

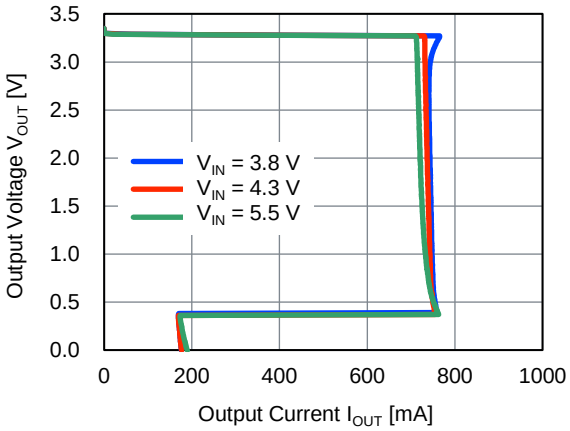

2) Quiescent Current vs Input Voltage
C_{IN} = none , C_{OUT} = 1 µF , T_a = 25 °C
NR1600xx120x

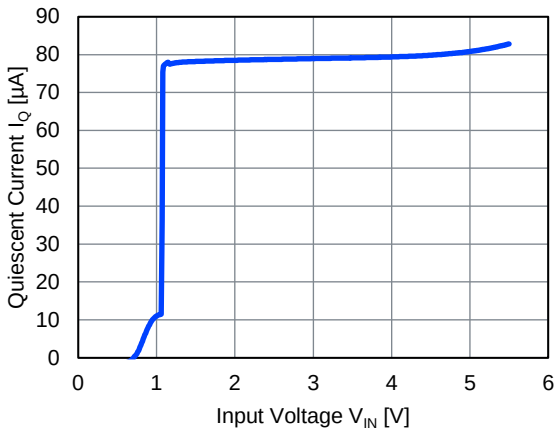

NR1600xx180x

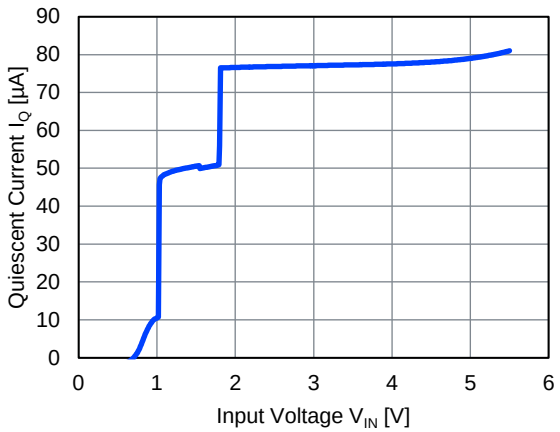

NR1600xx330x

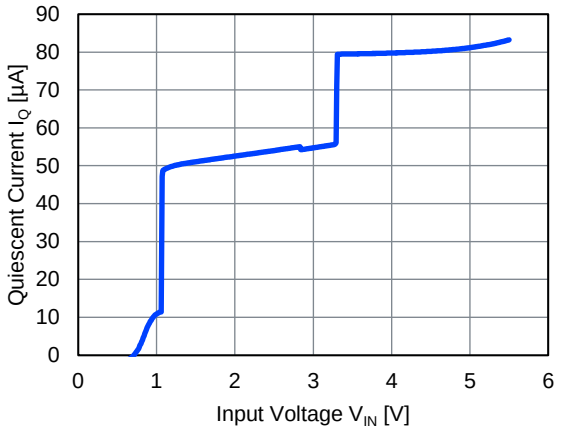

3) Output Voltage vs Temperature

C_{IN} = 1 µF , C_{OUT} = 1 µF , V_{IN} = V_{SET} + 1 V , I_{OUT} = 1 mA

NR1600xx120x

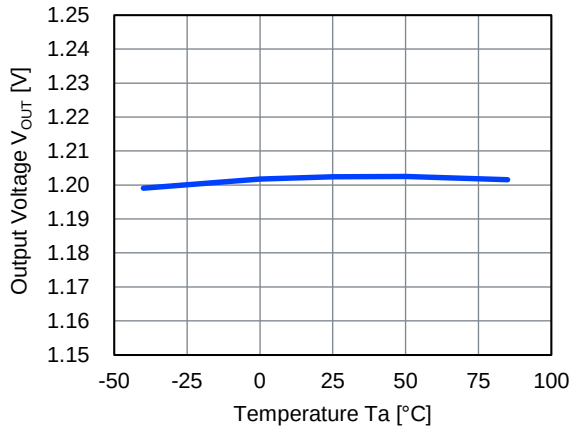

NR1600xx180x

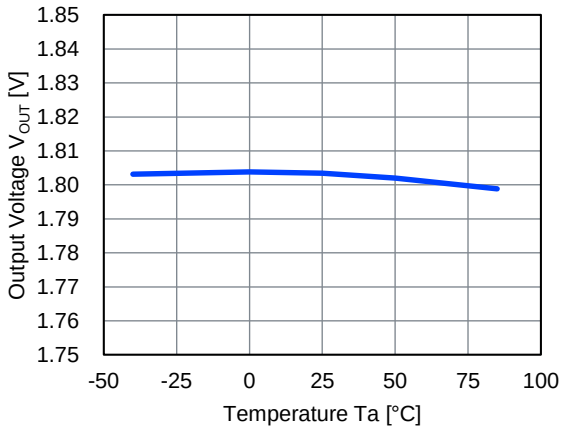

NR1600xx330x

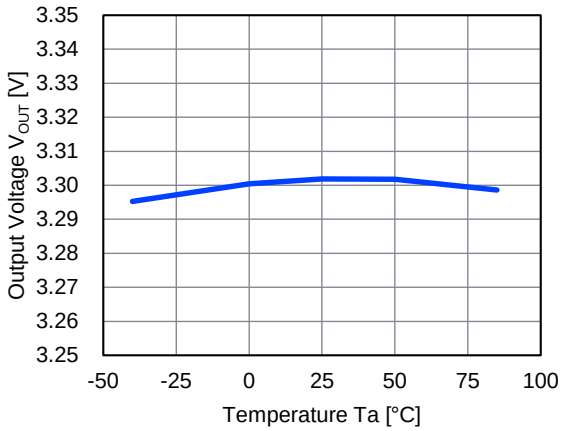

4) Output Voltage vs Input Voltage
C_{IN} = 1 µF , C_{OUT} = 1 µF , T_a = 25 °C
NR1600xx120x
(V_{IN} = 0.8 V to 2.2 V)

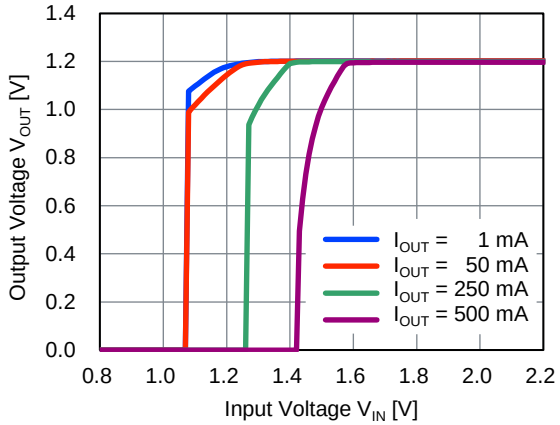

(V_{IN} = 1.0 V to 1.7 V)

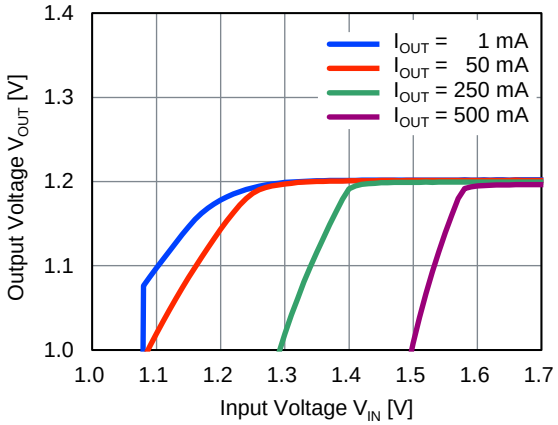

NR1600xx180x
(V_{IN} = 0.8 V to 2.8 V)

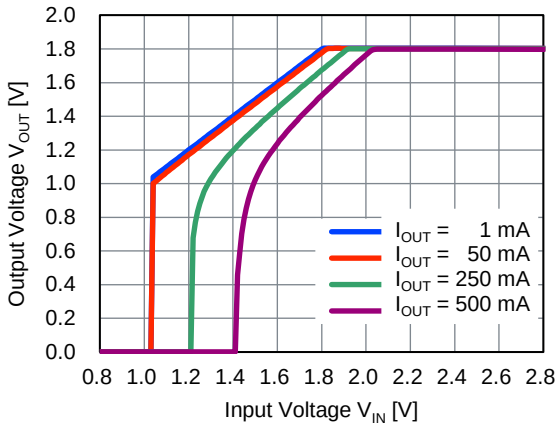

(V_{IN} = 1.6 V to 2.1 V)

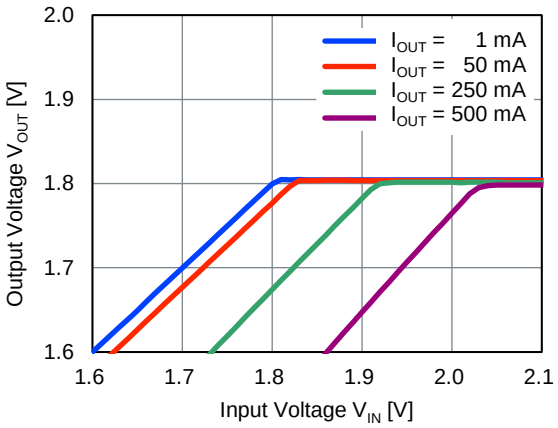

NR1600xx330x
(V_{IN} = 0.8 V to 4.3 V)

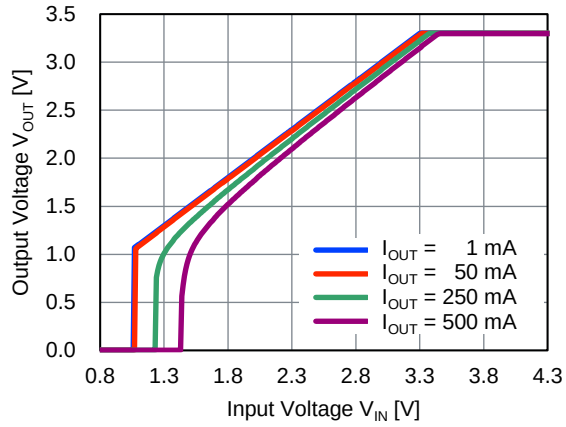

(V_{IN} = 3.1 V to 3.5 V)

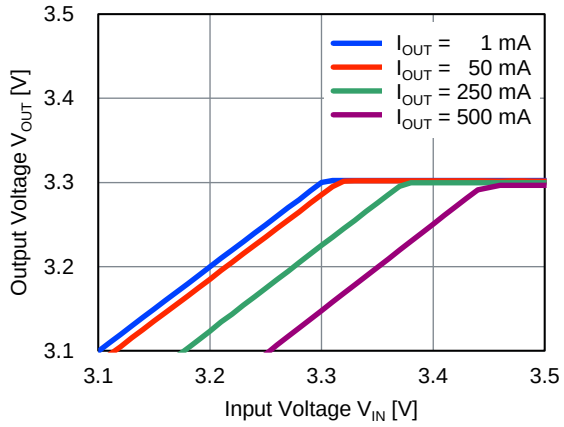

5) Quiescent Current vs Temperature

C_{IN}= none , C_{OUT} = 1 µF , V_{IN} = V_{SET} + 1 V

NR1600xx120x

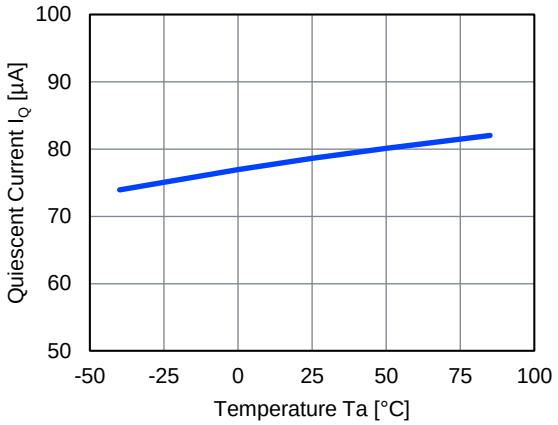

NR1600xx180x

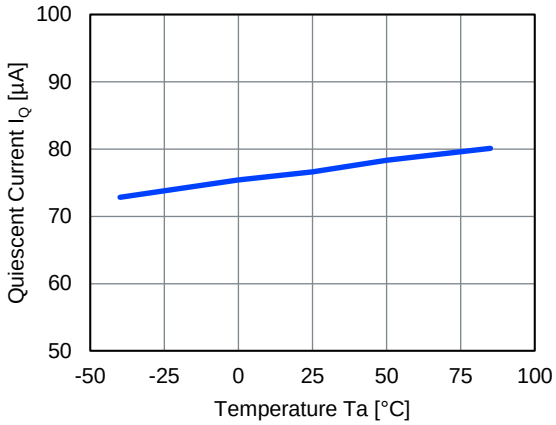

NR1600xx330x

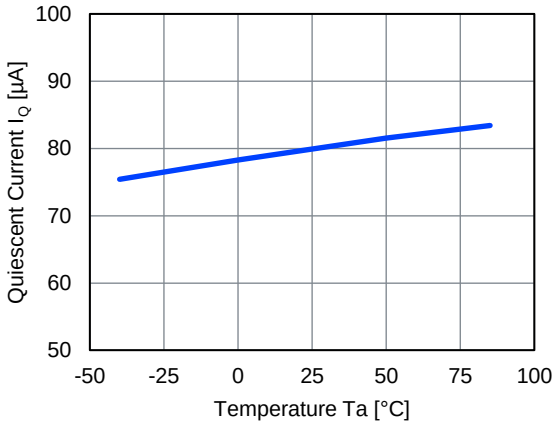

6) EN pin "High" / "Low" Input Voltage vs Temperature

C_{IN} = 1 µF , C_{OUT} = 1 µF

NR1600xxxxxx

EN = "High" , V_{IN} = 5.5 V

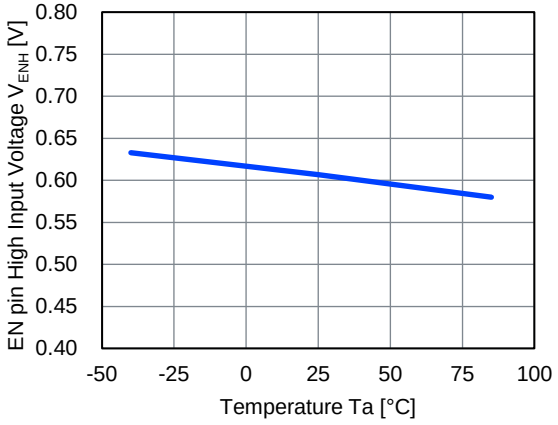

EN = "Low" , V_{IN} = 1.4 V

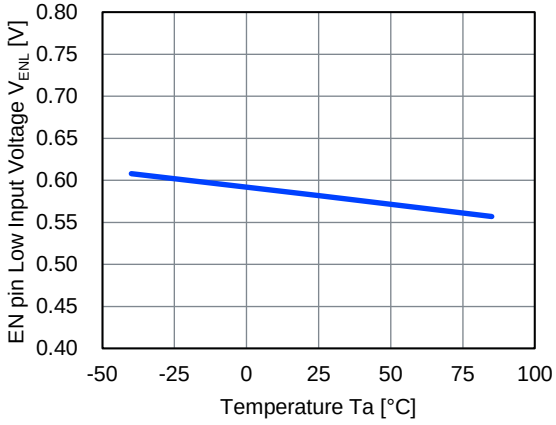

7) Dropout Voltage vs Output Current
C_{IN} = 1 µF , C_{OUT} = 1 µF

NR1600GK/DD120A/B/D/E

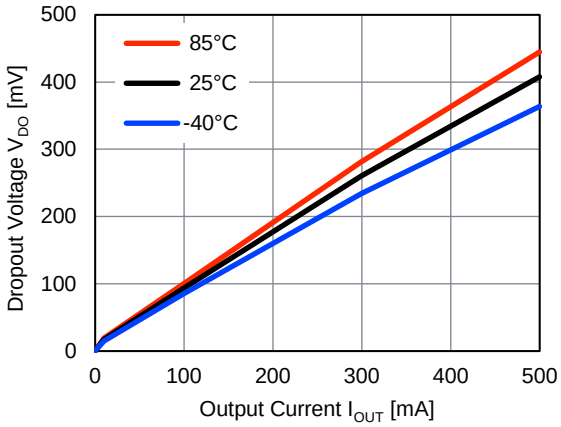

NR1600AC120C/F

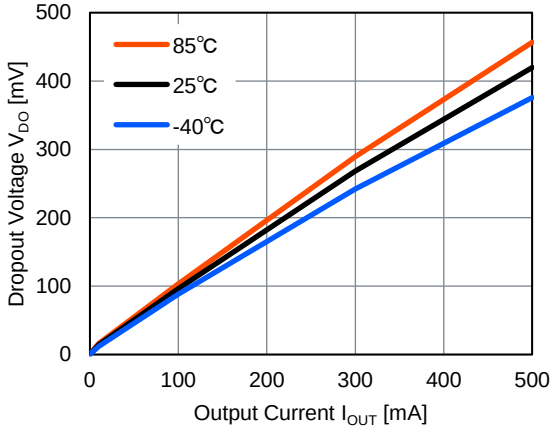

NR1600GK/DD180A/B/D/E

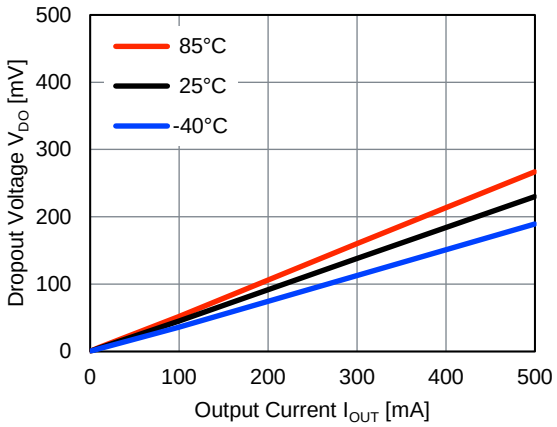

NR1600AC180C/F

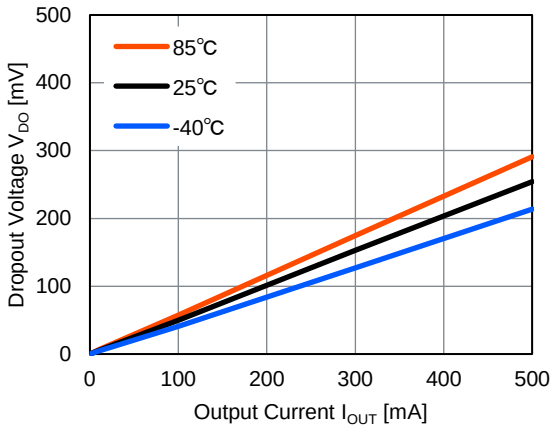

NR1600GK/DD330A/B/D/E

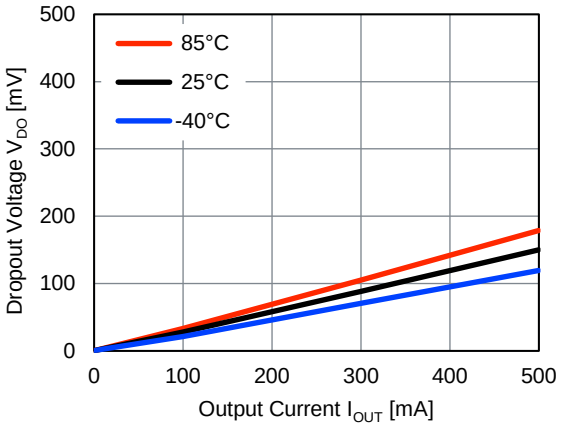

NR1600AC330C/F

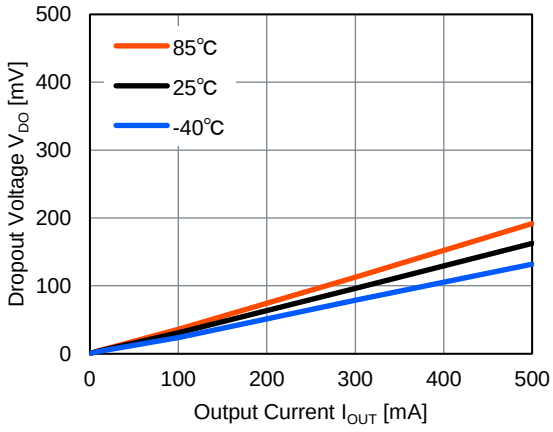

8) Dropout Voltage vs Set Output Voltage
C_{IN} = 1 µF , C_{OUT} = 1 µF , T_a = 25 °C
NR1600GK/DDxxxA/B/D/E

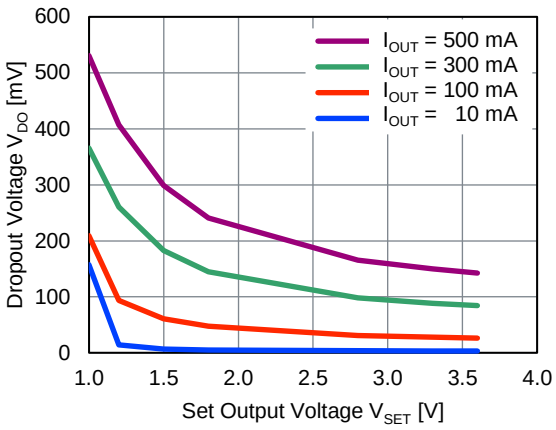

NR1600ACxxxC/F

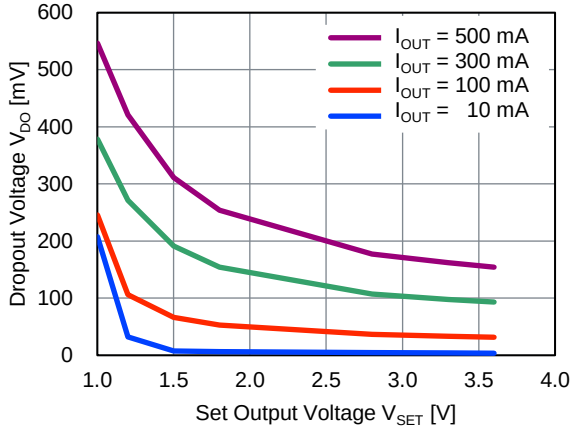

9) Discharge FET On-Resistance vs Input Voltage
C_{IN} = 1 µF , C_{OUT} = 1 µF , V_{OUT} = 0.1 V
NR1600xxxxxA/B/C

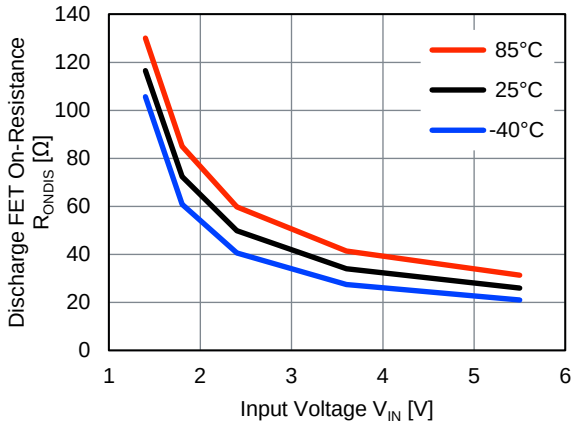

10) PG pin On-Resistance vs Input Voltage
C_{IN} = 1 µF , C_{OUT} = 1 µF , V_{PG} = 0.1 V
NR1600xxxxxB/C/E/F

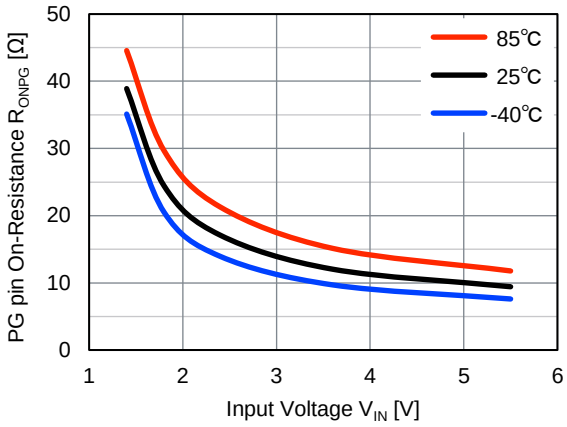

11) PG pin On-Resistance vs PG pin Input Voltage
C_{IN} = 1 µF , C_{OUT} = 1 µF , V_{IN} = 2.8 V
NR1600xxxxxB/C/E/F

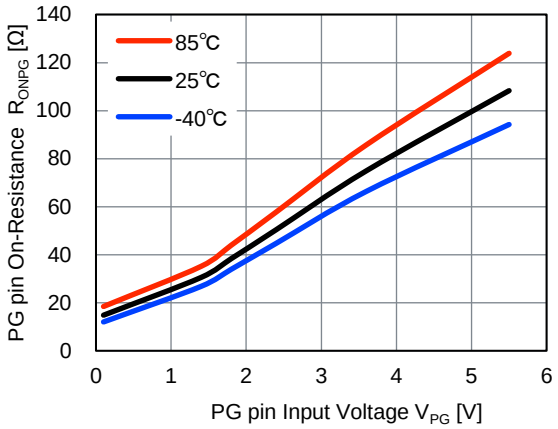

12) Ripple Rejection vs Frequency
C_{IN}= none , C_{OUT} = 1 µF , V_{IN} = V_{SET} + 1 V , Ripple 0.2 V_{P-P} , T_a = 25 °C ,
NR1600xx120x

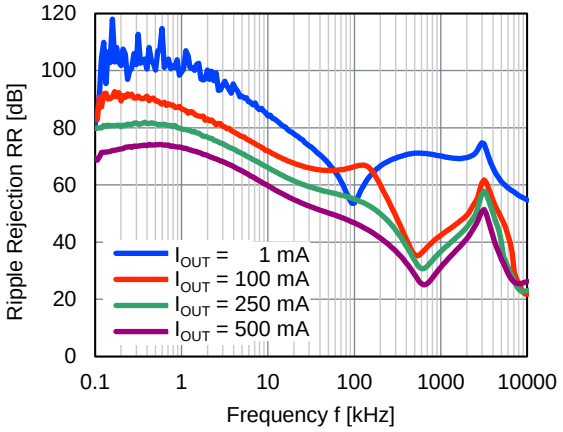

NR1600xx180x

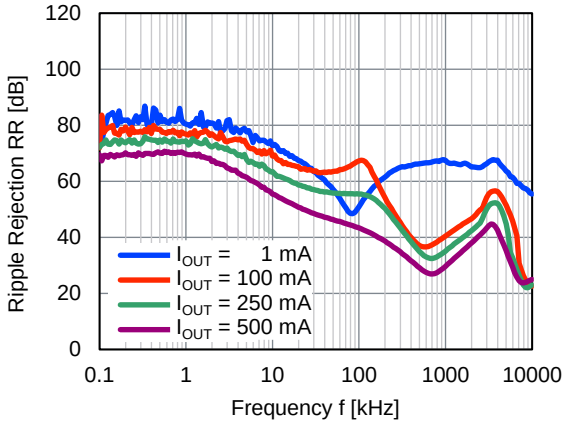

NR1600xx330x

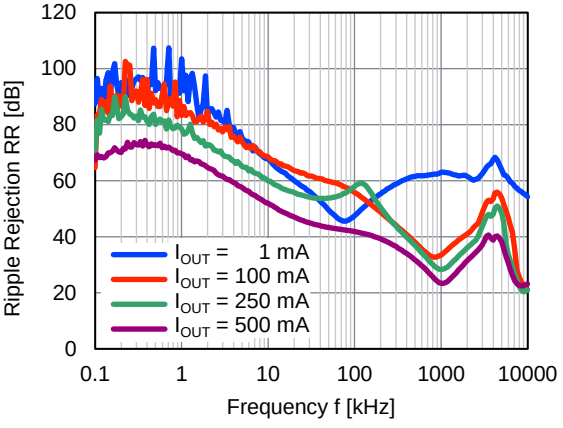

13) Ripple Rejection vs Input Voltage
C_{IN}= none , C_{OUT} = 1 µF , T_a = 25 °C
NR1600xx120x
I_{OUT} = 1 mA

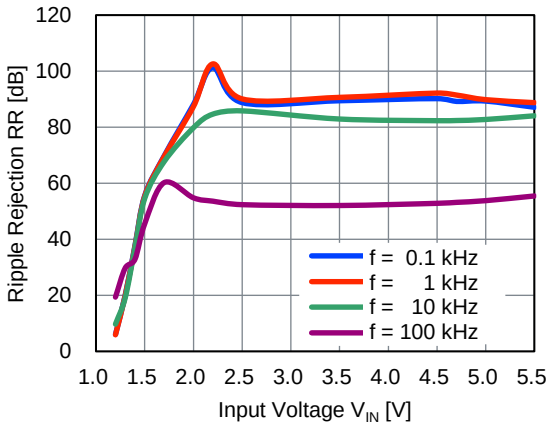

I_{OUT} = 100 mA

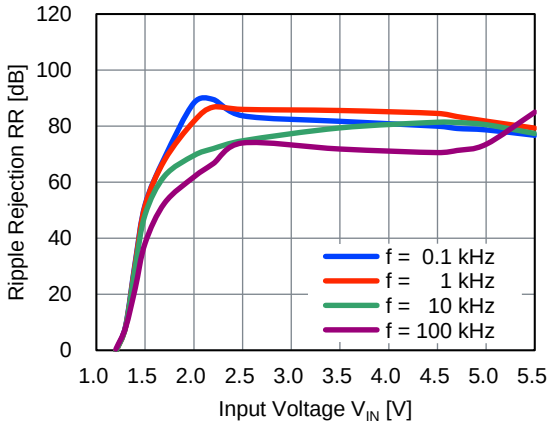

NR1600xx180x
I_{OUT} = 1 mA

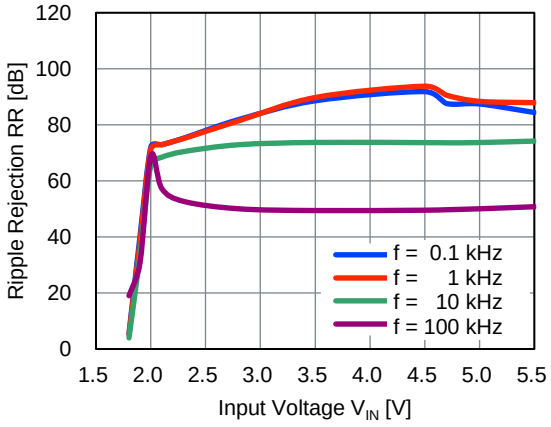

I_{OUT} = 100 mA

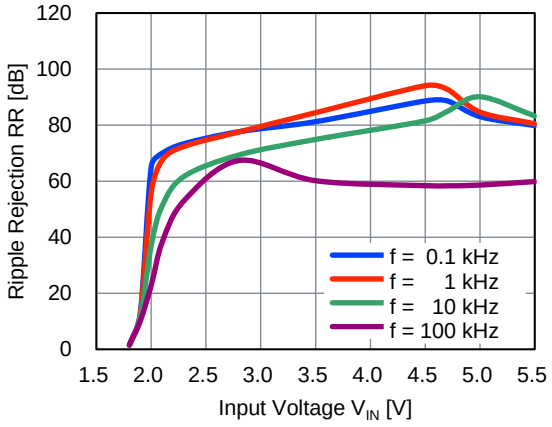

NR1600xx330x
I_{OUT} = 1 mA

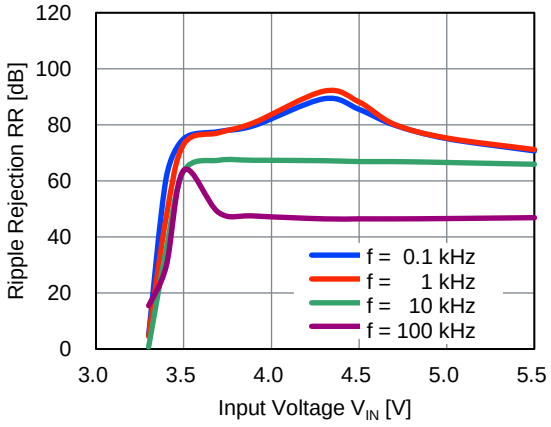

I_{OUT} = 100 mA

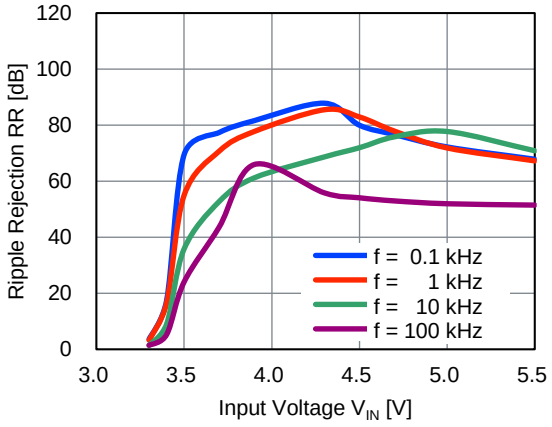

14) Line Transient Response

C_{IN} = 0.1 µF , C_{OUT} = 1 µF , t_R = t_F = 5 µs , I_{OUT} = 100 mA , T_a = 25 °C

NR1600xx120x

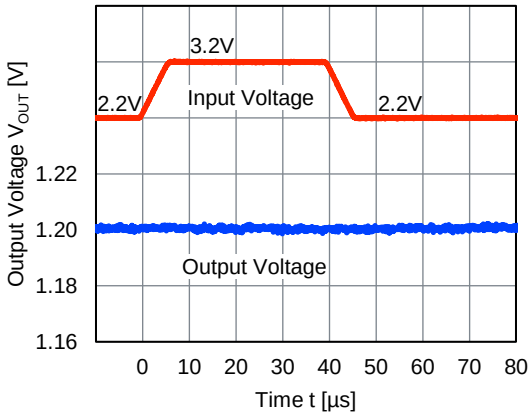

NR1600xx180x

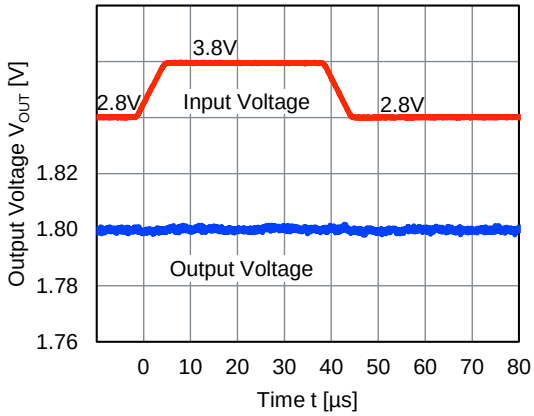

NR1600xx330x

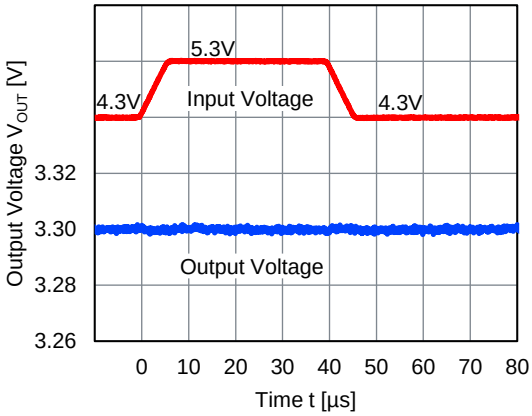

15) Load Transient Response

C_{IN} = 1 µF , V_{IN} = V_{SET} + 1 V , t_R = t_F = 0.5 µs , T_a = 25 °C

NR1600xx120x

C_{OUT} = 1 µF, I_{OUT} = 1 mA ⇔ 250 mA

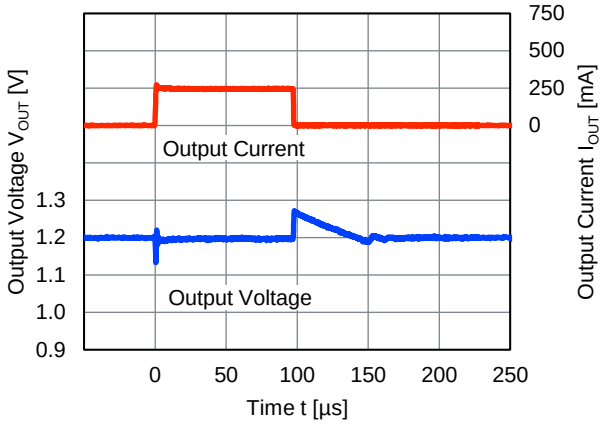

C_{OUT} = 10 µF, I_{OUT} = 1 mA ⇔ 250 mA

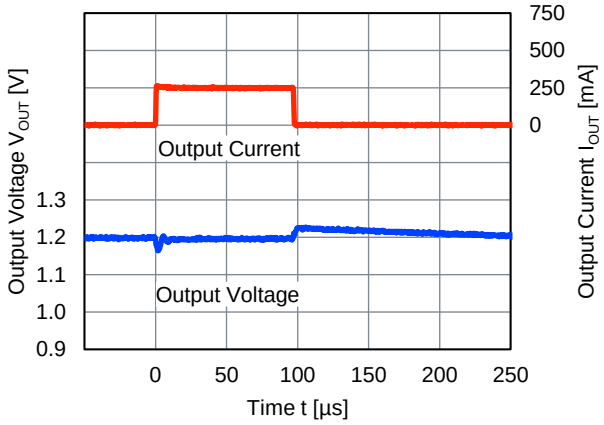

C_{OUT} = 1 µF, I_{OUT} =1 mA ⇔ 500 mA

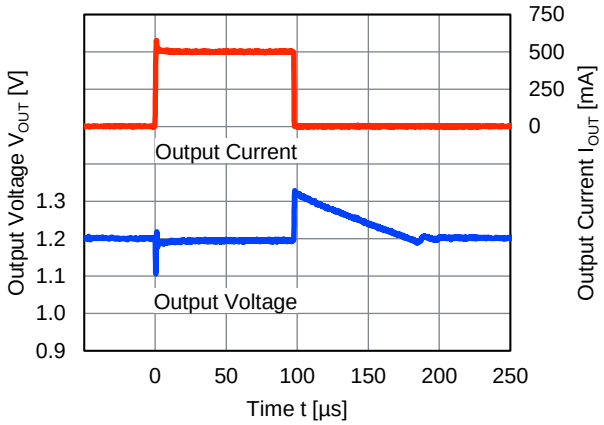

C_{OUT} = 10 µF, I_{OUT} = 1 mA ⇔ 500 mA

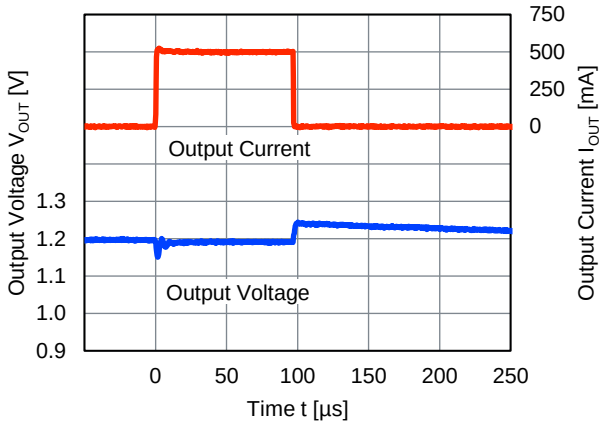

NR1600xx180x

C_{OUT} = 1 µF, I_{OUT} = 1 mA ⇔ 250 mA

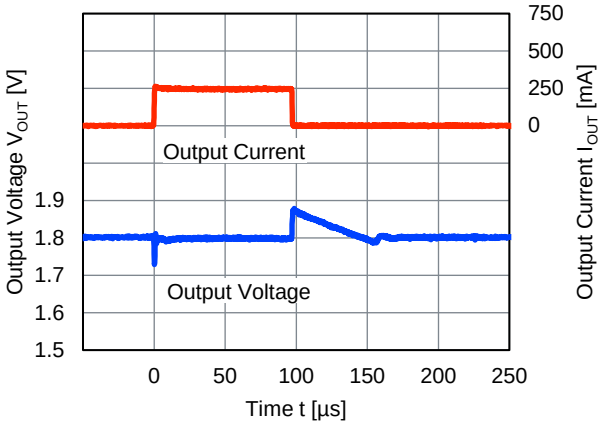

C_{OUT} = 10 µF, I_{OUT} = 1 mA ⇔ 250 mA

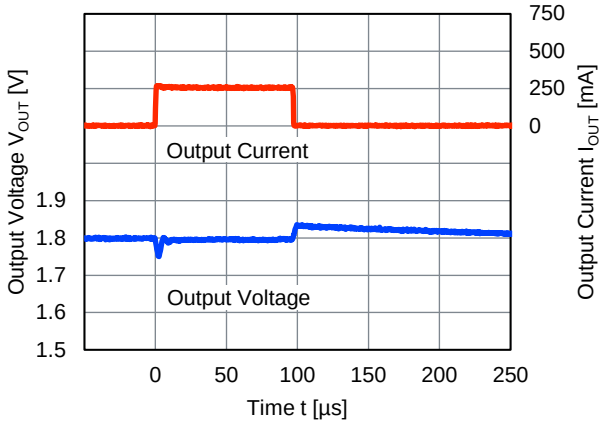

C_{OUT} = 1 µF, I_{OUT} = 1 mA ⇔ 500 mA

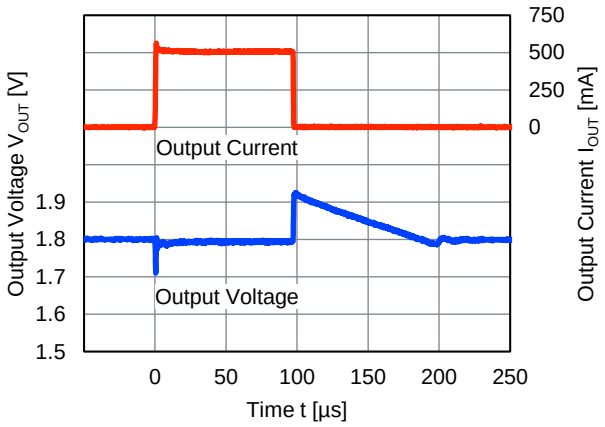

C_{OUT} = 10 µF, I_{OUT} = 1 mA ⇔ 500 mA

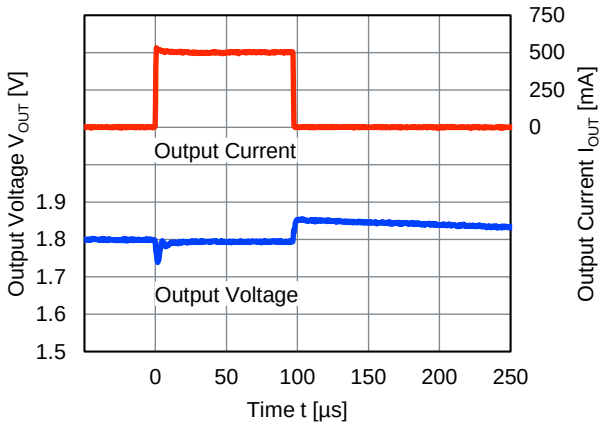

NR1600xx330x

C_{OUT} = 1 µF, I_{OUT} = 1 mA ⇔ 250 mA

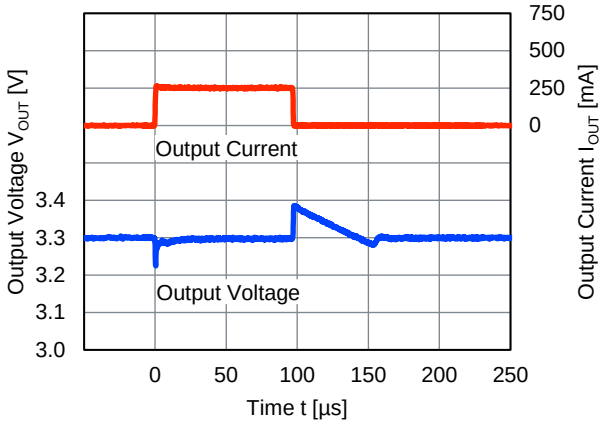

C_{OUT} = 10 µF, I_{OUT} = 1 mA ⇔ 250 mA

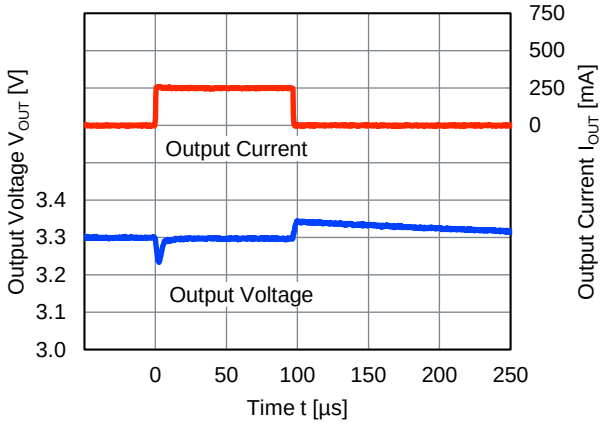

C_{OUT} = 1 µF, I_{OUT} = 1 mA ⇔ 500 mA

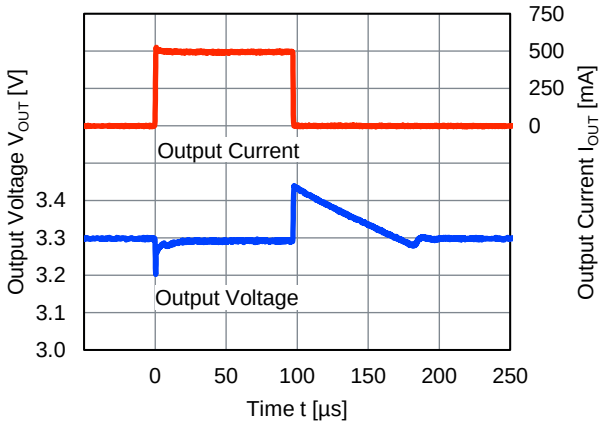

C_{OUT} = 10 µF, I_{OUT} = 1 mA ⇔ 500 mA

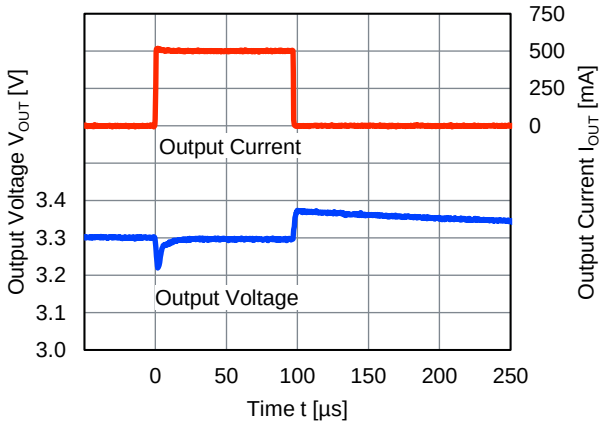

16) Turn on Speed with VIN = EN Pin

C_{IN} = 1 µF , C_{OUT} = 1 µF , C_{SS} = 6.8 nF , V_{IN} = V_{EN} = 0 V to V_{SET} + 1 V , I_{OUT} = 0 mA , T_a = 25 °C

NR1600xx120x

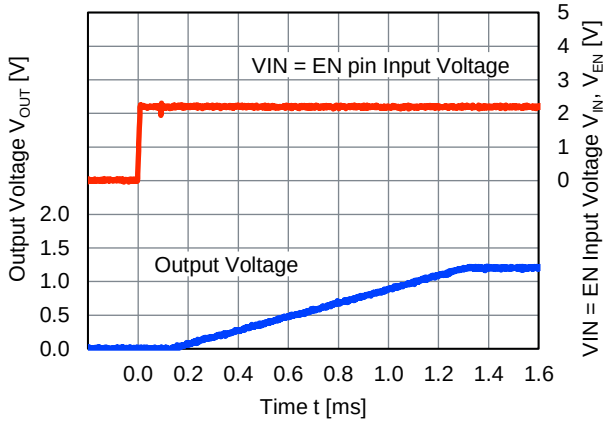

NR1600xx180x

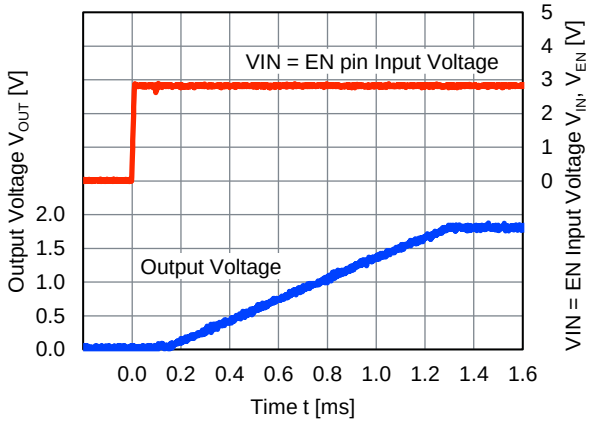

NR1600xx330x

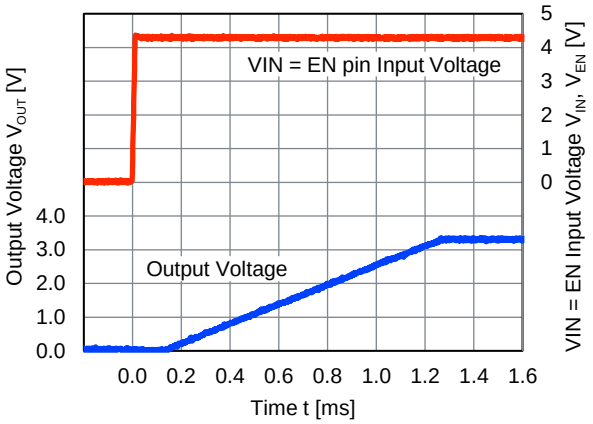

17) Turn off Speed with EN Pin

C_{IN} = 1 µF , C_{OUT} = 1 µF , V_{IN} = V_{SET} + 1 V , I_{OUT} = 0 mA , T_a = 25 °C

NR1600xx120A/B/C

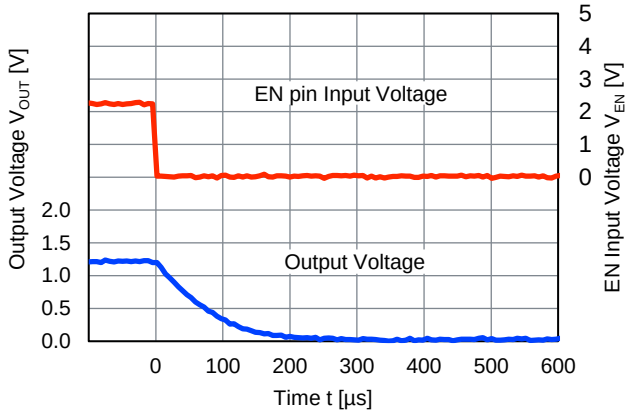

NR1600xx180A/B/C

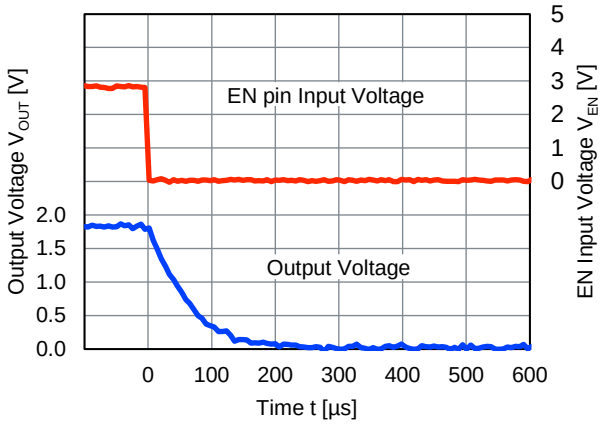

NR1600xx330A/B/C

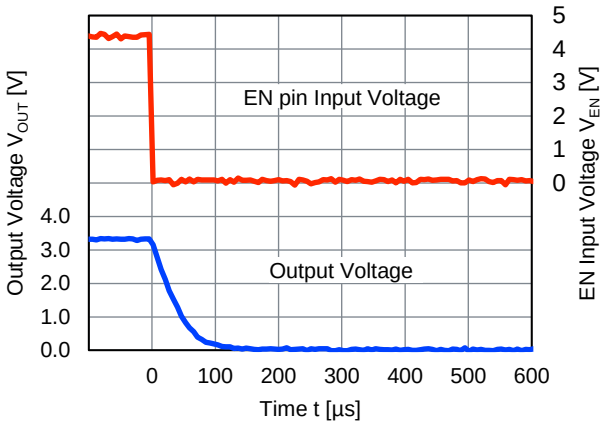

18) Inrush Current

C_{IN} = 1 µF , V_{IN} = V_{SET} + 1 V , I_{OUT} = 0 mA , T_a = 25 °C

NR1600xx120x

C_{SS} = 6.8 nF

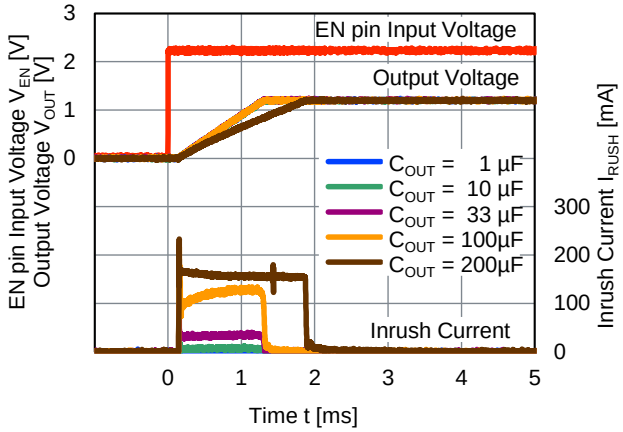

C_{SS} = none

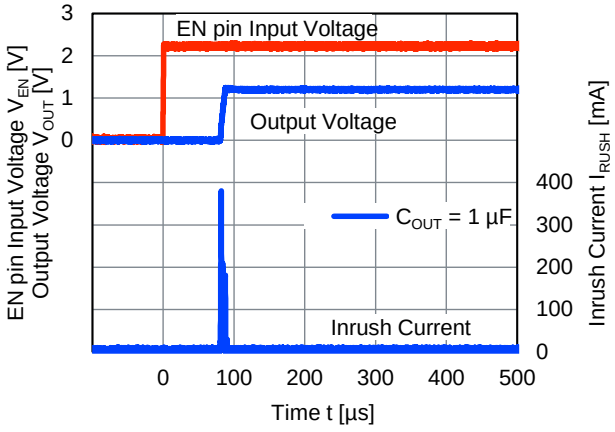

NR1600xx180x

C_{SS} = 6.8 nF

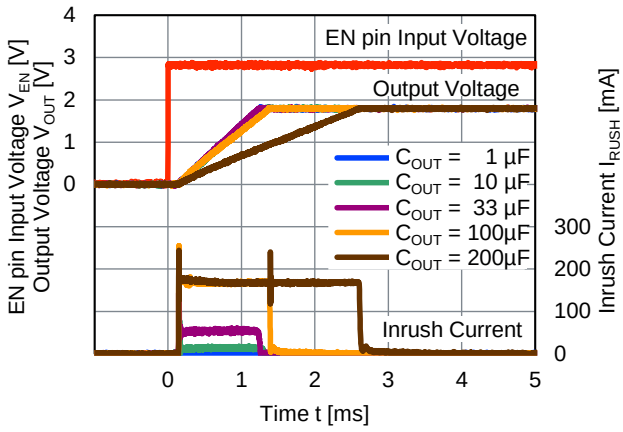

C_{SS} = none

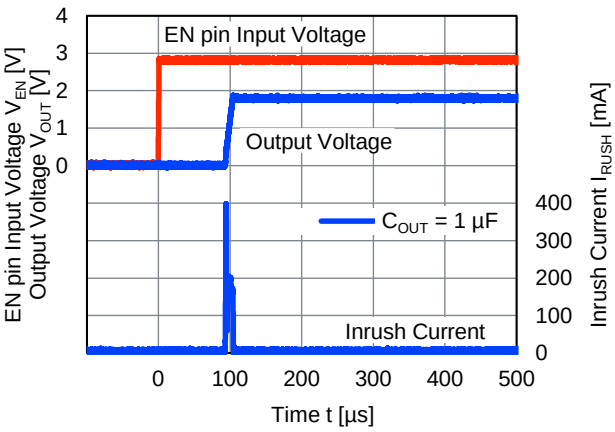

NR1600xx330x

C_{SS} = 6.8 nF

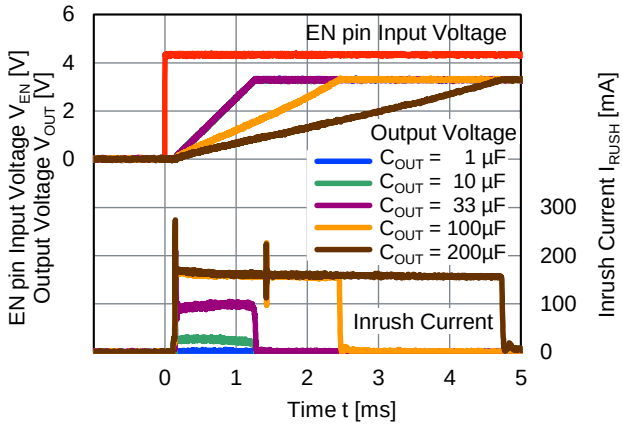

C_{SS} = none

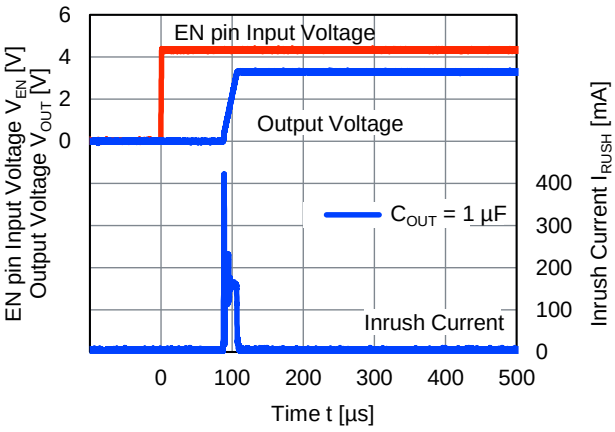

19) Soft-start Time

C_{IN} = 1 µF , C_{OUT} = 1 µF , V_{IN} = V_{SET} + 1 V , I_{OUT} = 0 mA , T_a = 25 °C

NR1600xx120x

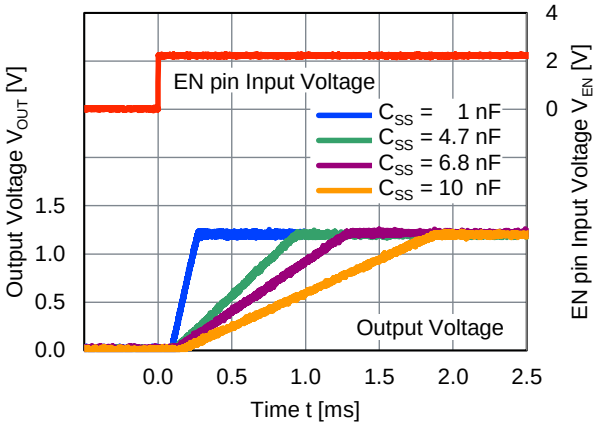

NR1600xx180x

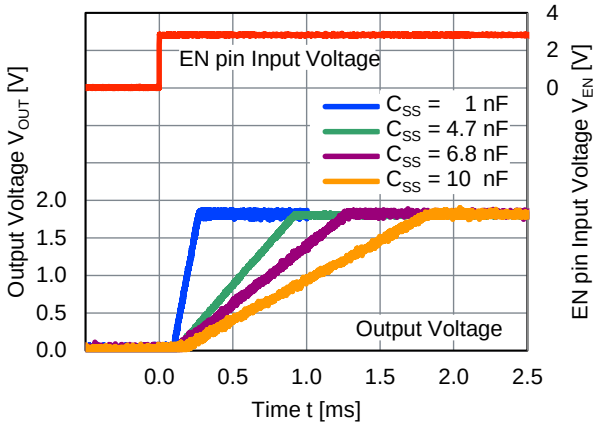

NR1600xx330x

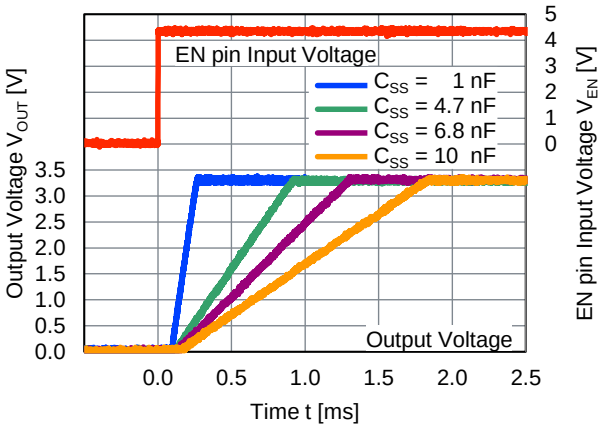

■ TEST CIRCUIT

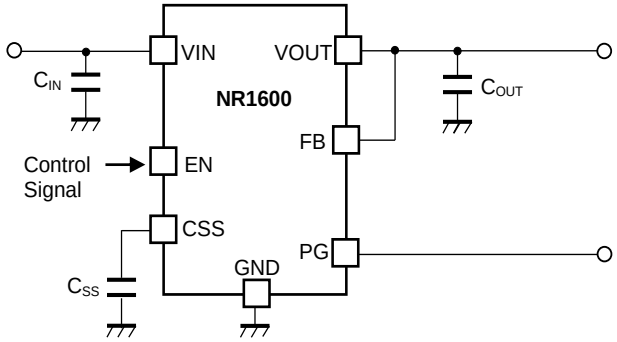

NR1600 Test Circuit

*The PG pin correspond to (NR1600xxxxxB/C/E/F)
*The FB pin correspond to (NR1600xxxxxA/C/D/F)

【Components List for Our Evaluation】

Symbol	Capacitance	Parts Number
C_{IN}	1 µF	GRM155C81C105KE11D
C_{OUT}	1 µF	GRM155C81C105KE11D
	10 µF	GRM188R60J106ME84D

Nisshinbo Micro Devices Inc.

DFN1212-6-GK

PI-DFN1212-6-GK-E-A

■ PACKAGE DIMENSIONS

UNIT: mm

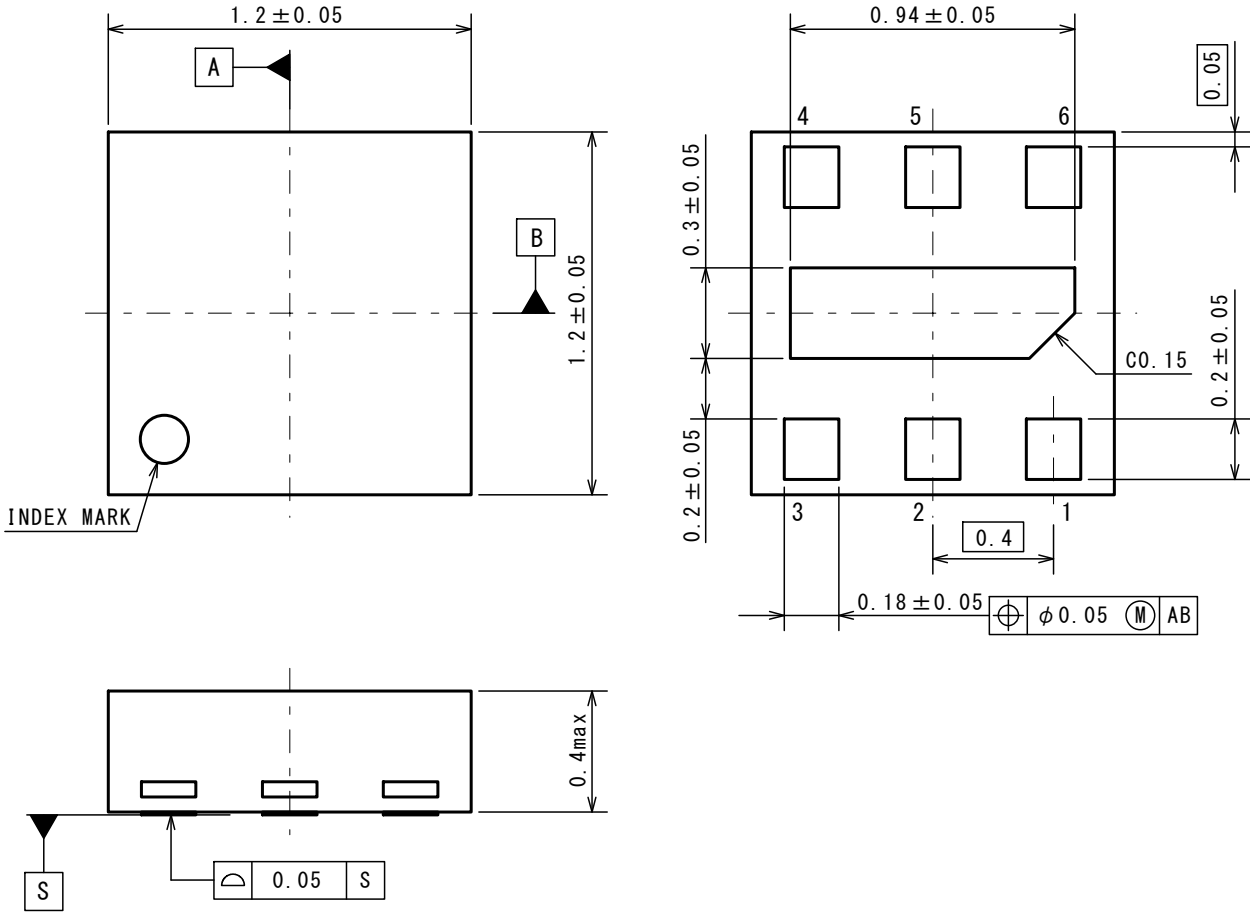

■ EXAMPLE OF SOLDER PADS DIMENSIONS

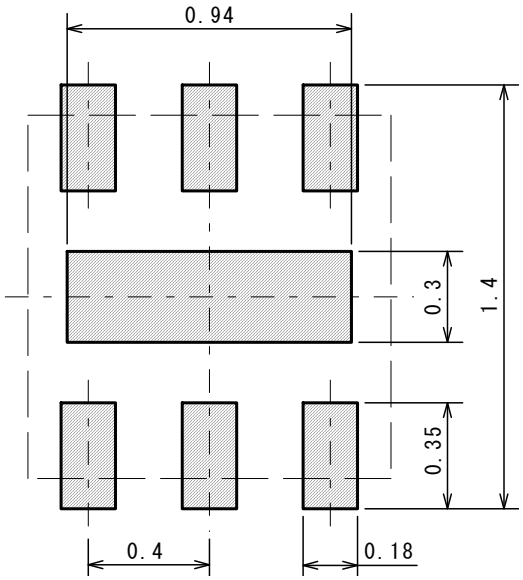

Nisshinbo Micro Devices Inc.

DFN1212-6-GK

PI-DFN1212-6-GK-E-A

■ PACKING SPEC

UNIT: mm

(1) Taping dimensions / Insert direction

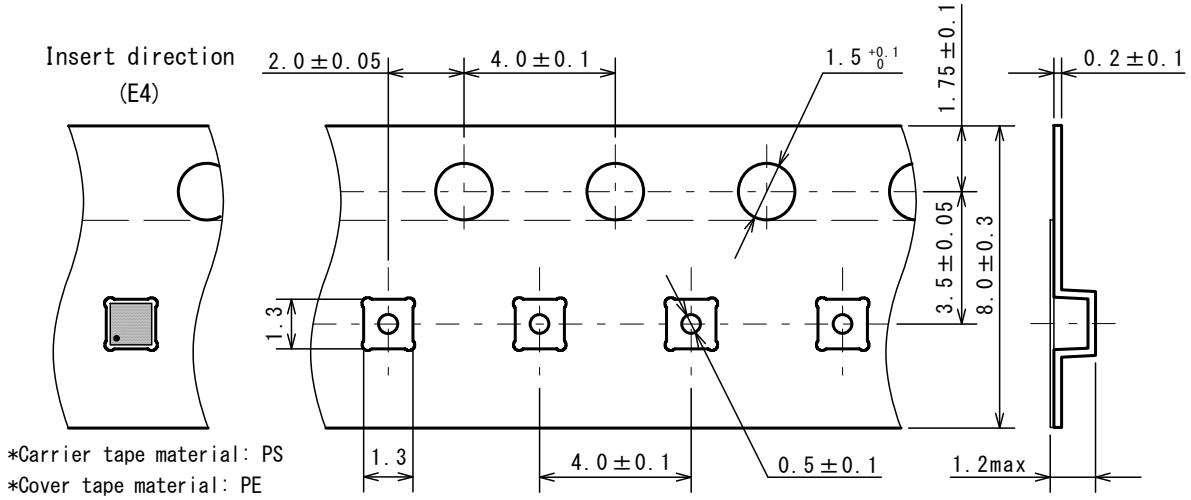

(2) Taping state

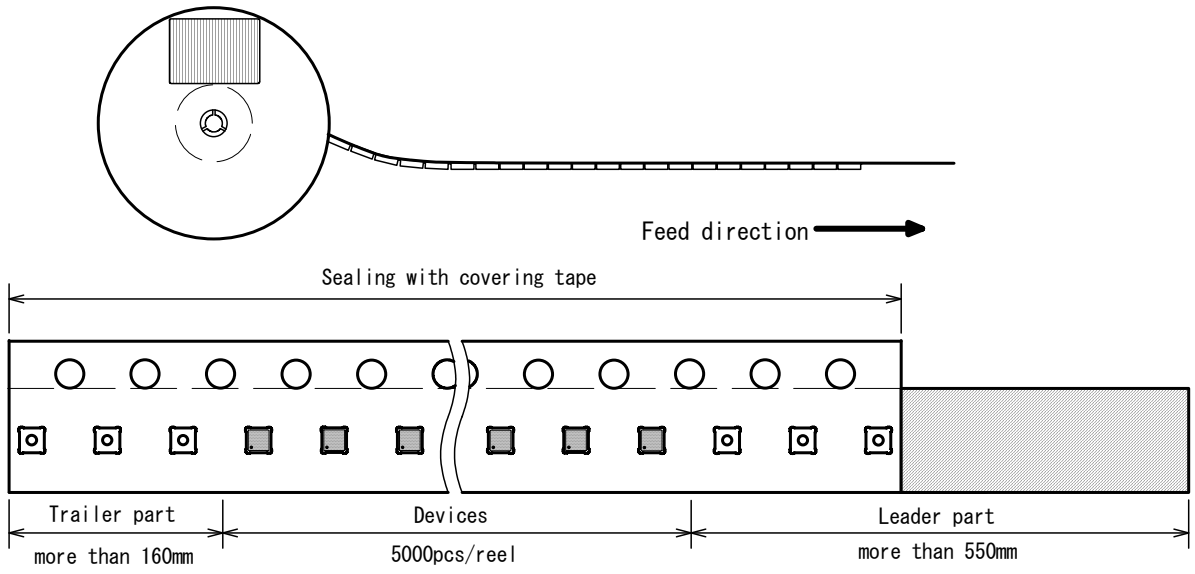

(3) Reel dimensions

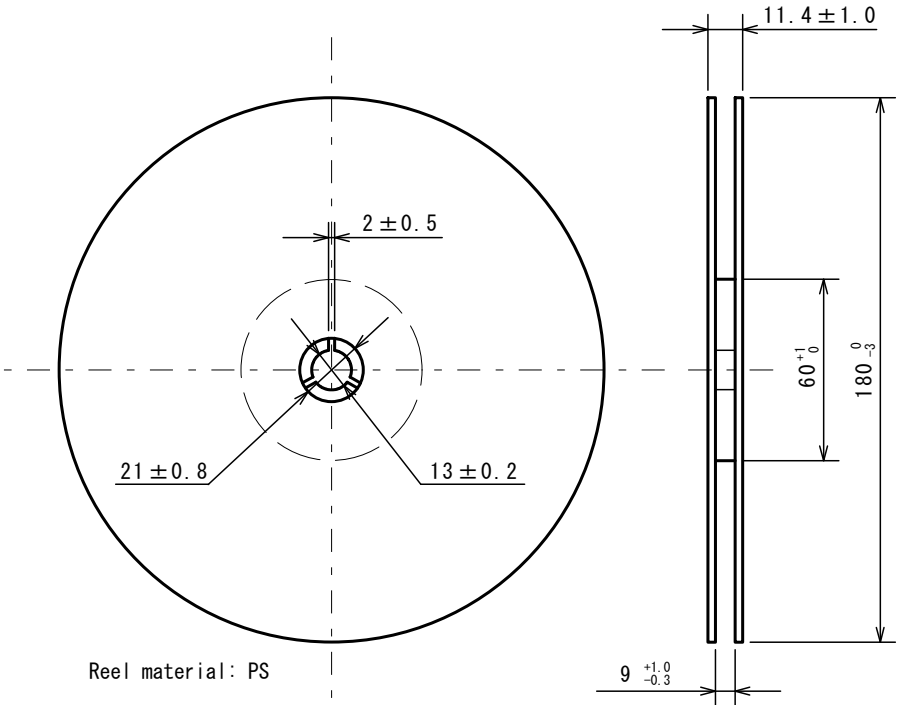

(4) Peeling strength

Peeling strength of cover tape

- Peeling angle 165 to 180° degrees to the taped surface.
- Peeling speed 300mm/min
- Peeling strength 0.1 to 1.0N

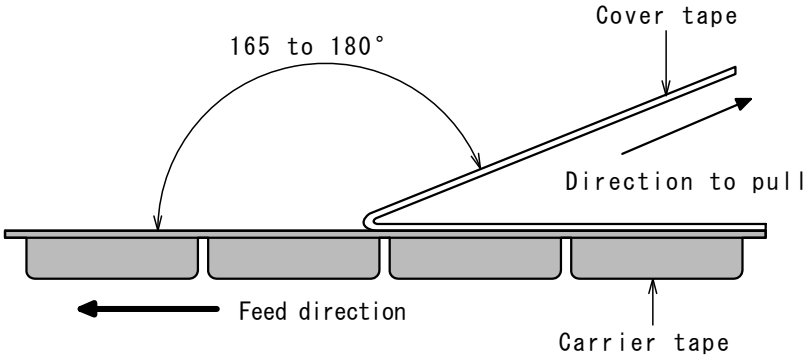

(5) Packing state

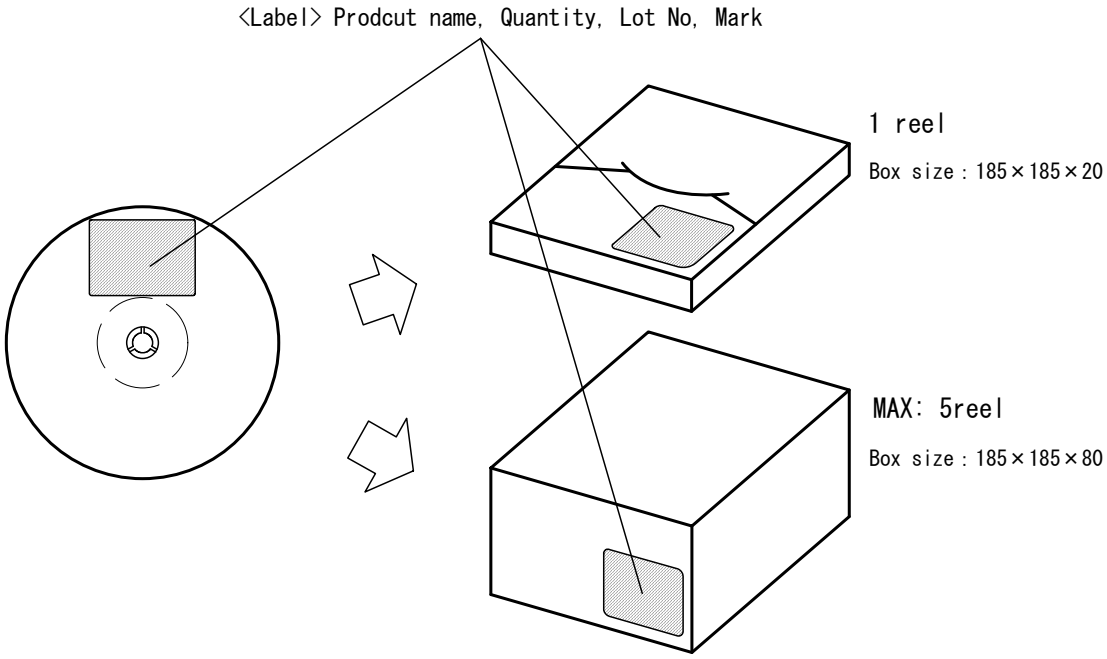

■ **HEAT-RESISTANCE PROFILES**

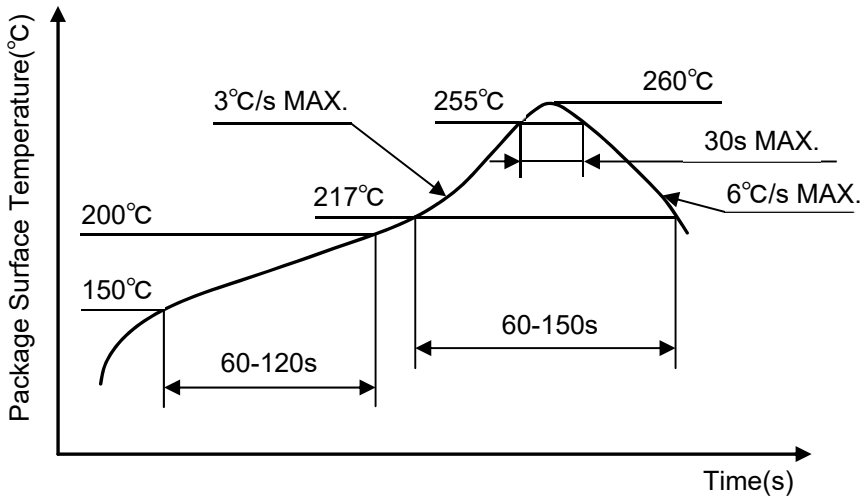

Reflow profile

Nisshinbo Micro Devices Inc.

SOT-23-6-DD

PI-SOT-23-6-DD-01-E-B

■ PACKAGE DIMENSIONS

UNIT: mm

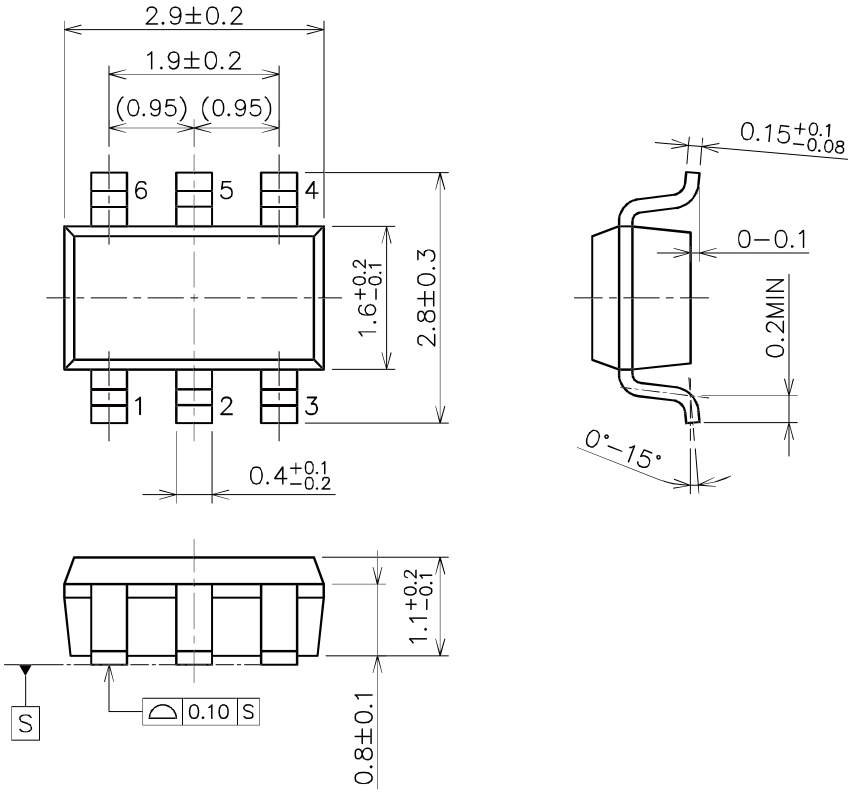

■ EXAMPLE OF SOLDER PADS DIMENSIONS

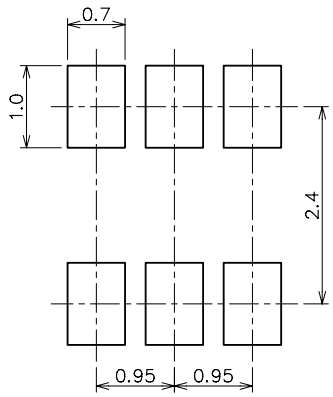

Nisshinbo Micro Devices Inc.

SOT-23-6-DD

PI-SOT-23-6-DD-01-E-B

■ PACKING SPEC

UNIT: mm

(1) Taping dimensions / Insert direction

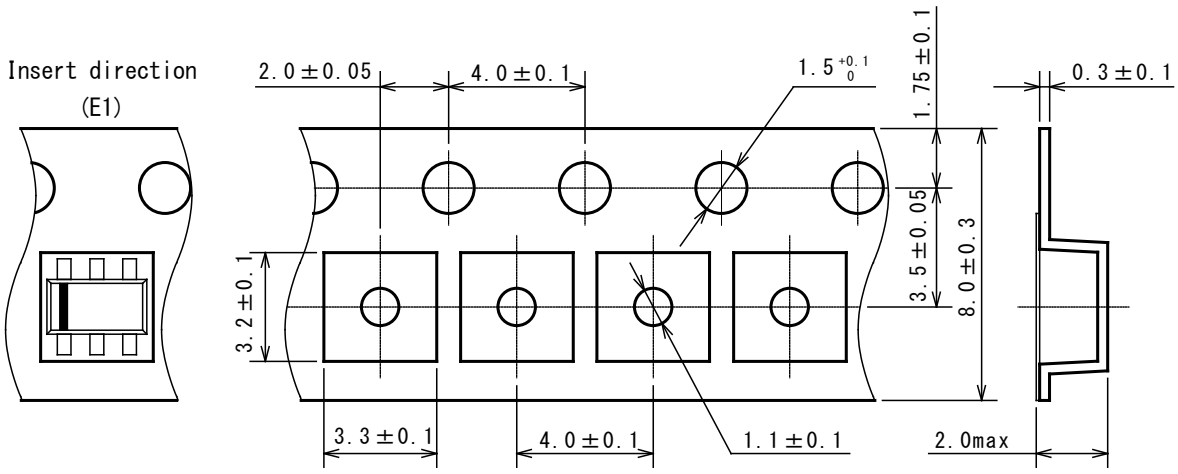

(2) Taping state

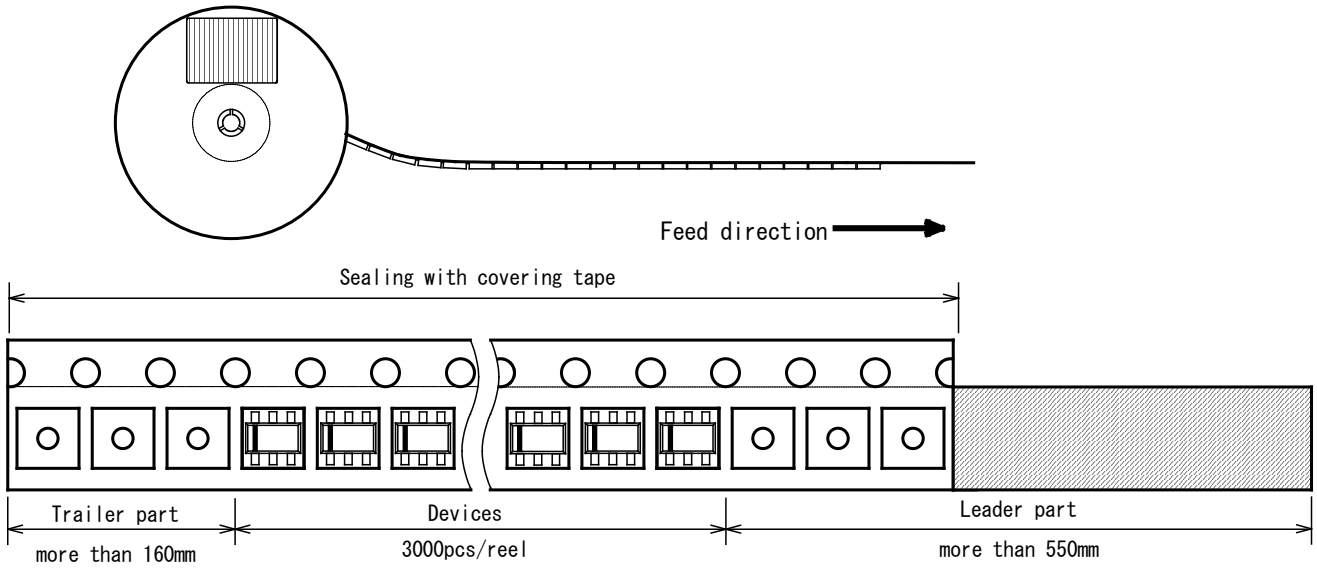

(3) Reel dimensions

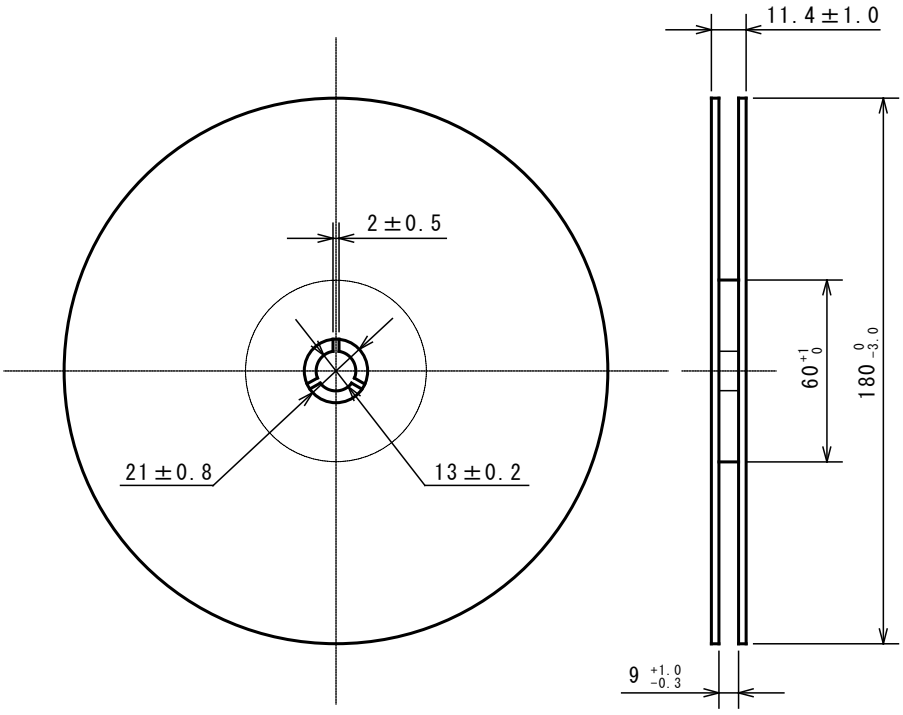

(4) Peeling strength

Peeling strength of cover tape

・Peeling angle	165 to 180°degrees to the taped surface.
・Peeling speed	300mm/min
・Peeling strength	0.1 to 1.0N

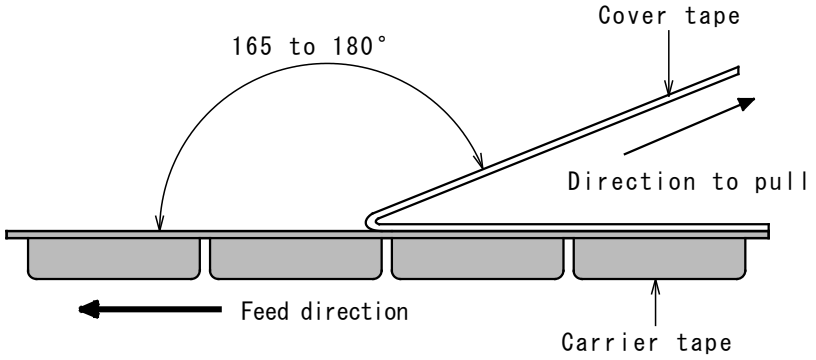

(5) Packing state

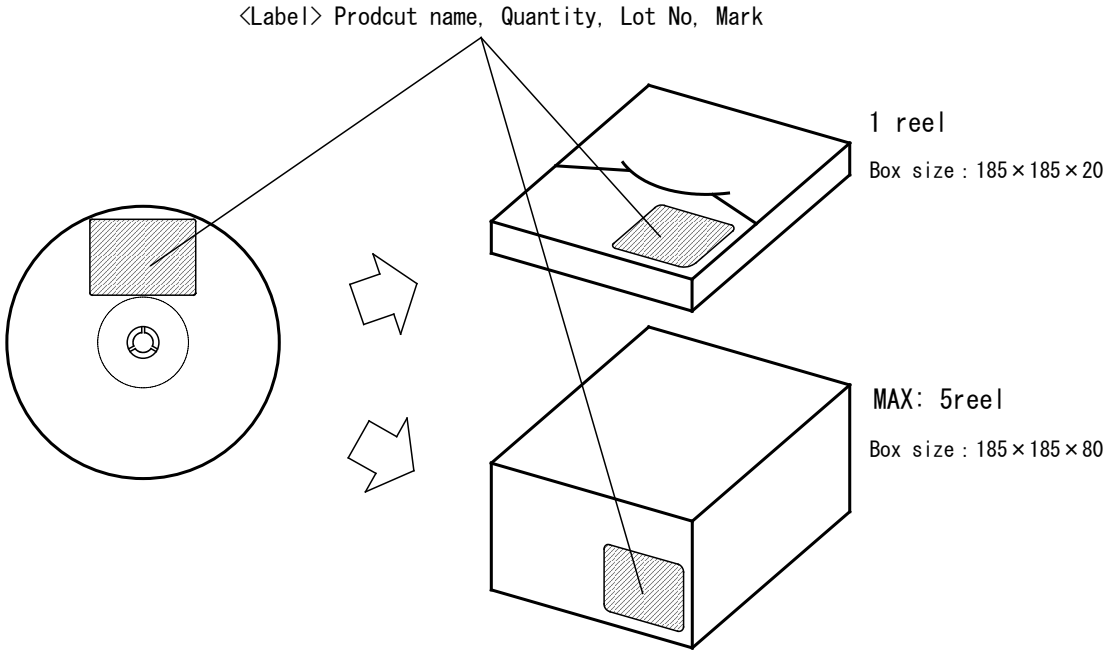

■ **HEAT-RESISTANCE PROFILES**

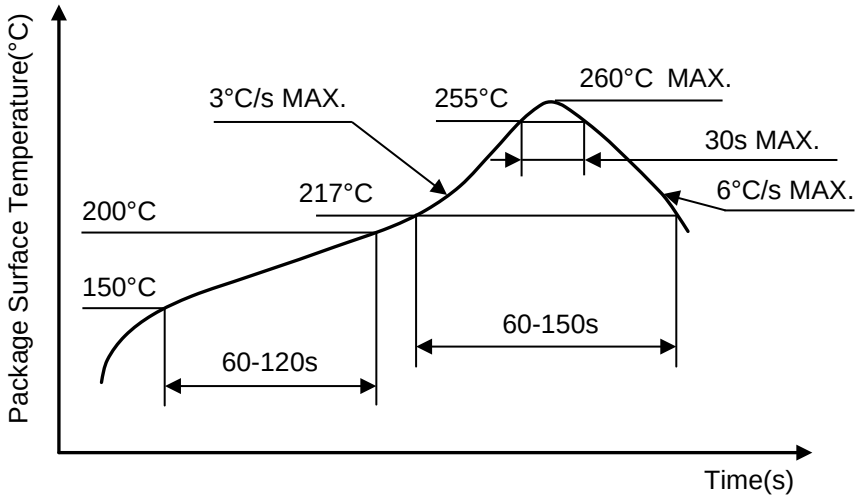

Reflow profile

Nisshinbo Micro Devices Inc.

HSOP-8-AC

PI-HSOP-8-AC-E-B

■ PACKAGE DIMENSIONS

UNIT: mm

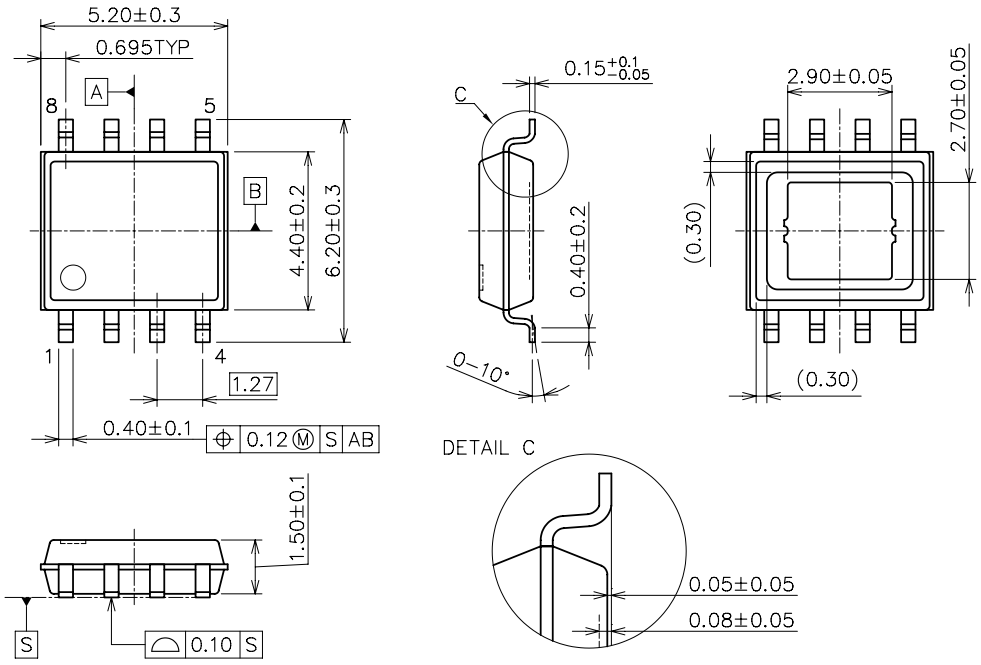

■ EXAMPLE OF SOLDER PADS DIMENSIONS

UNIT: mm

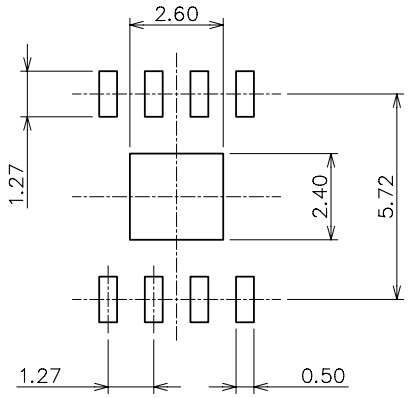

<Instructions for mounting>

Please be careful when mounting, because there is a standoff on the backside electrode of the package.

Nisshinbo Micro Devices Inc.

HSOP-8-AC

PI-HSOP-8-AC-E-B

■ **PACKING SPEC**

UNIT: mm

(1) Taping dimensions / Insert direction

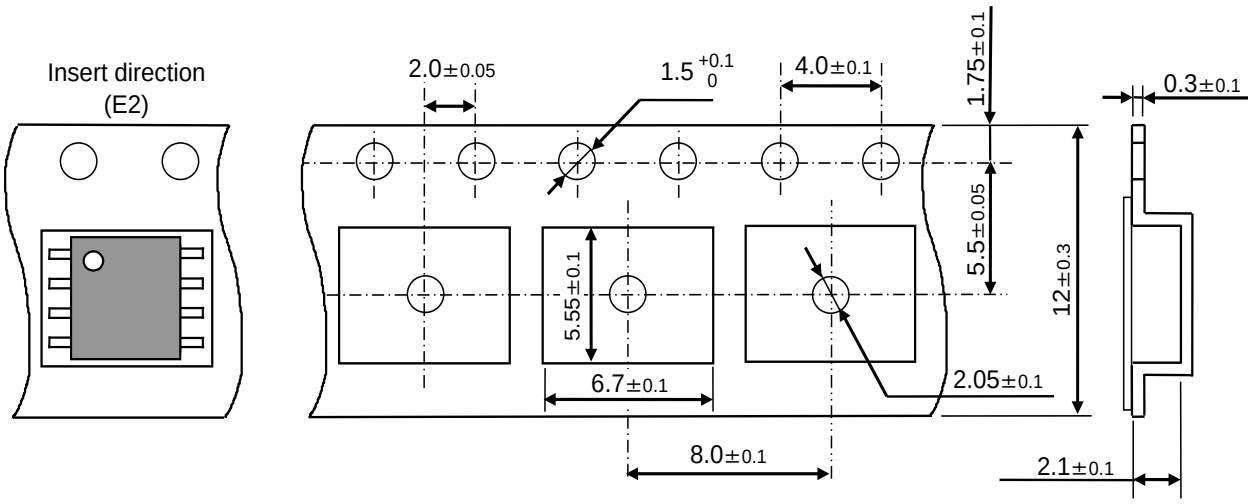

(2) Taping state

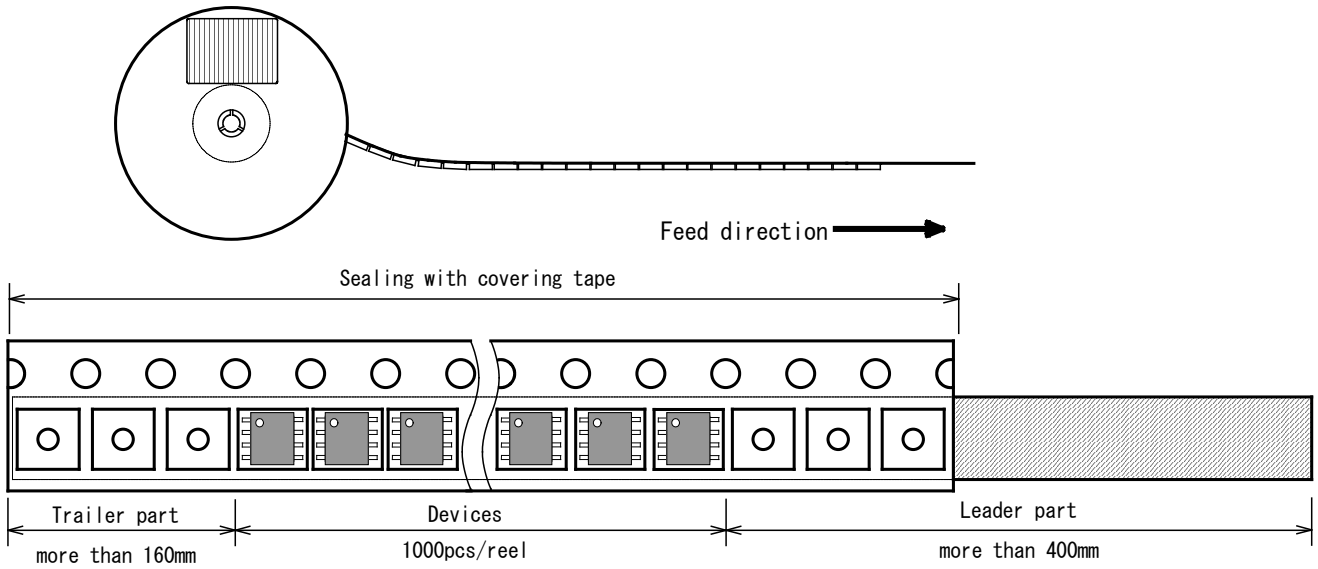

(3) Reel dimensions

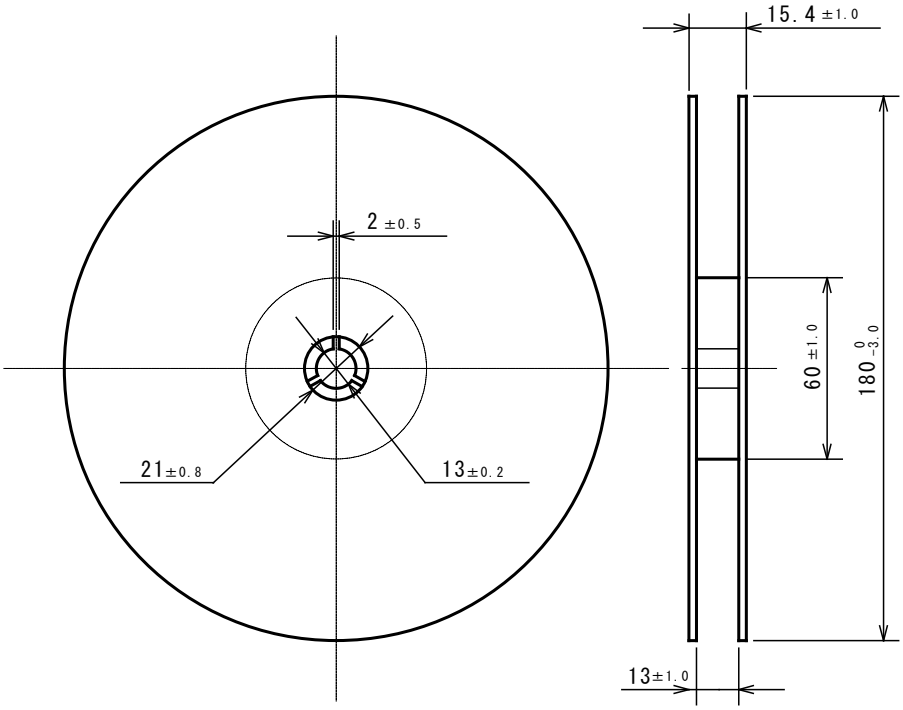

(4) Peeling strength

Peeling strength of cover tape
- Peeling angle 165 to 180°degrees to the taped surface.
- Peeling speed 300mm/min
- Peeling strength 0.1 to 1.3N

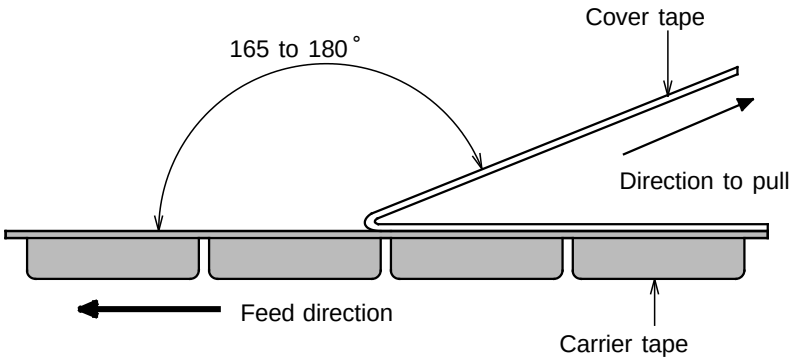

(5) Packing state

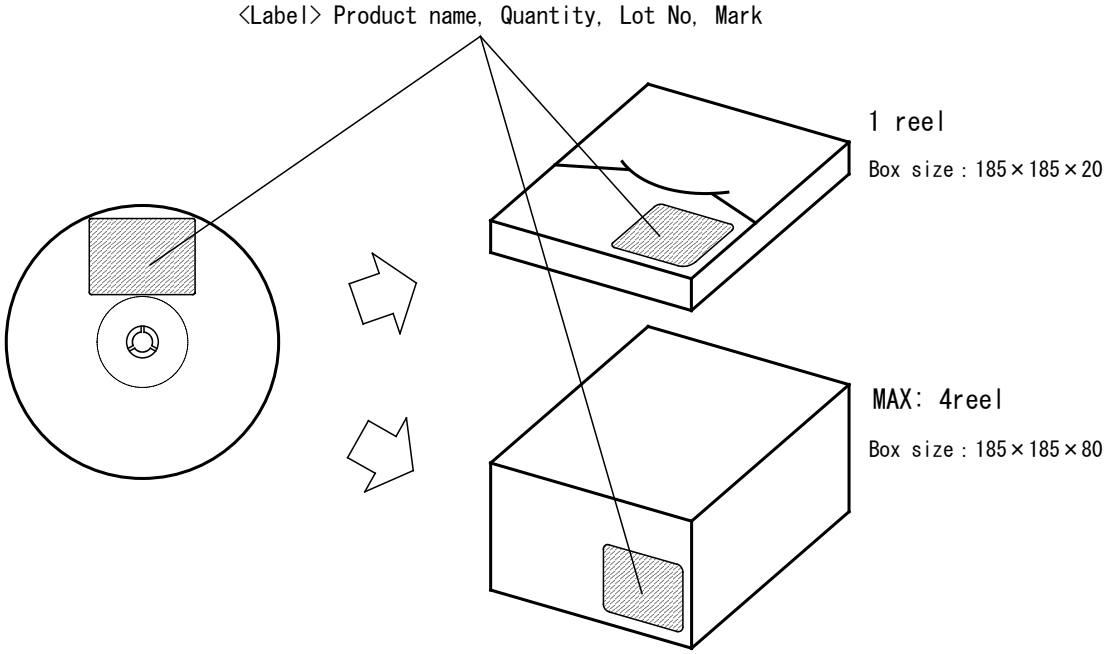

■ **HEAT-RESISTANCE PROFILES**

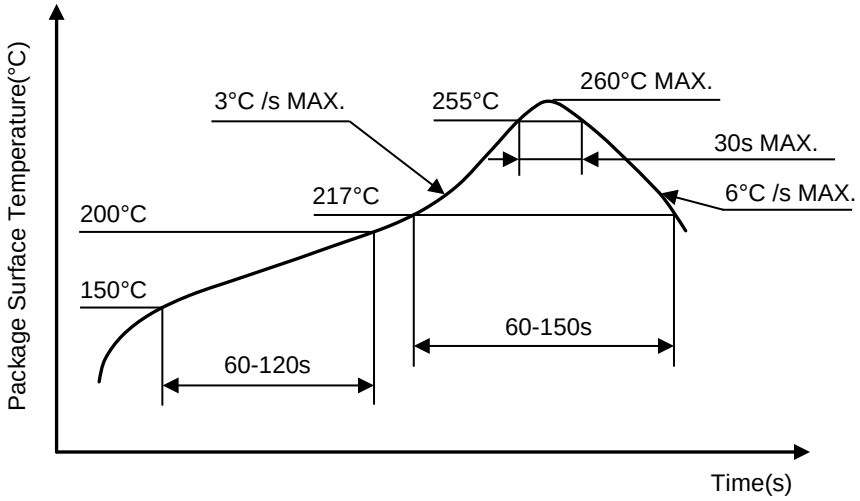

Reflow profile

■ Revision History

Date	Version	Contents of Changes
2022.12.27	Ver. 1.0	Initial release
2023.11.29	Ver. 1.1	Update due to completion of development of NR1600AC, NR1600DD
2024.02.02	Ver. 1.2	Updated “SOT-23-6-DD-01, HSOP-8-AC Package Information” to the latest version. (PI-SOT-23-6-DD-01-E-A → PI-SOT-23-6-DD-01-E-B) (PI-HSOP-8-AC-E-A → PI-HSOP-8-AC-E-B)
2024.05.21	Ver. 1.3	HERMAL CHARACTERISTICS: Format was changed. (The specification is no change.)

1. The products and the product specifications described in this document are subject to change or discontinuation of production without notice for reasons such as improvement. Therefore, before deciding to use the products, please refer to our sales representatives for the latest information thereon.
2. The materials in this document may not be copied or otherwise reproduced in whole or in part without the prior written consent of us.
3. This product and any technical information relating thereto are subject to complementary export controls (so-called KNOW controls) under the Foreign Exchange and Foreign Trade Law, and related politics ministerial ordinance of the law. (Note that the complementary export controls are inapplicable to any application-specific products, except rockets and pilotless aircraft, that are insusceptible to design or program changes.) Accordingly, when exporting or carrying abroad this product, follow the Foreign Exchange and Foreign Trade Control Law and its related regulations with respect to the complementary export controls.
4. The technical information described in this document shows typical characteristics and example application circuits for the products. The release of such information is not to be construed as a warranty of or a grant of license under our or any third party's intellectual property rights or any other rights.
5. The products listed in this document are intended and designed for use as general electronic components in standard applications (office equipment, telecommunication equipment, measuring instruments, consumer electronic products, amusement equipment etc.). Those customers intending to use a product in an application requiring extreme quality and reliability, for example, in a highly specific application where the failure or misoperation of the product could result in human injury or death should first contact us.
    - Aerospace Equipment
    - Equipment Used in the Deep Sea
    - Power Generator Control Equipment (nuclear, steam, hydraulic, etc.)
    - Life Maintenance Medical Equipment
    - Fire Alarms / Intruder Detectors
    - Vehicle Control Equipment (automotive, airplane, railroad, ship, etc.)
    - Various Safety Devices
    - Traffic control system
    - Combustion equipment

    In case your company desires to use this product for any applications other than general electronic equipment mentioned above, make sure to contact our company in advance. Note that the important requirements mentioned in this section are not applicable to cases where operation requirements such as application conditions are confirmed by our company in writing after consultation with your company.
6. We are making our continuous effort to improve the quality and reliability of our products, but semiconductor products are likely to fail with certain probability. In order to prevent any injury to persons or damages to property resulting from such failure, customers should be careful enough to incorporate safety measures in their design, such as redundancy feature, fire containment feature and fail-safe feature. We do not assume any liability or responsibility for any loss or damage arising from misuse or inappropriate use of the products.
7. The products have been designed and tested to function within controlled environmental conditions. Do not use products under conditions that deviate from methods or applications specified in this datasheet. Failure to employ the products in the proper applications can lead to deterioration, destruction or failure of the products. We shall not be responsible for any bodily injury, fires or accident, property damage or any consequential damages resulting from misuse or misapplication of the products.
8. Quality Warranty
    8-1. Quality Warranty Period
    In the case of a product purchased through an authorized distributor or directly from us, the warranty period for this product shall be one (1) year after delivery to your company. For defective products that occurred during this period, we will take the quality warranty measures described in section 8-2. However, if there is an agreement on the warranty period in the basic transaction agreement, quality assurance agreement, delivery specifications, etc., it shall be followed.
    8-2. Quality Warranty Remedies
    When it has been proved defective due to manufacturing factors as a result of defect analysis by us, we will either deliver a substitute for the defective product or refund the purchase price of the defective product.
    Note that such delivery or refund is sole and exclusive remedies to your company for the defective product.
    8-3. Remedies after Quality Warranty Period
    With respect to any defect of this product found after the quality warranty period, the defect will be analyzed by us. On the basis of the defect analysis results, the scope and amounts of damage shall be determined by mutual agreement of both parties. Then we will deal with upper limit in Section 8-2. This provision is not intended to limit any legal rights of your company.
9. Anti-radiation design is not implemented in the products described in this document.
10. The X-ray exposure can influence functions and characteristics of the products. Confirm the product functions and characteristics in the evaluation stage.
11. WLCSP products should be used in light shielded environments. The light exposure can influence functions and characteristics of the products under operation or storage.
12. Warning for handling Gallium and Arsenic (GaAs) products (Applying to GaAs MMIC, Photo Reflector). These products use Gallium (Ga) and Arsenic (As) which are specified as poisonous chemicals by law. For the prevention of a hazard, do not burn, destroy, or process chemically to make them as gas or power. When the product is disposed of, please follow the related regulation and do not mix this with general industrial waste or household waste.
13. Please contact our sales representatives should you have any questions or comments concerning the products or the technical information.

NISSHINBO

Nisshinbo Micro Devices Inc.

Official website
https://www.nisshinbo-microdevices.co.jp/en/

Purchase information
https://www.nisshinbo-microdevices.co.jp/en/buy/