

BLDC 40S30A

25.1.0475D

Rated Voltage	No Load Speed	Rated Speed	Cont. Power	Rated Torque	Current at rated Speed	Efficiency at Duty Point
[V]	[rpm]	[rpm]	[W]	[mNm]	[A]	[%]
24	3.385	3.040	46	145	2,1	85

Motor Code: 121188800020

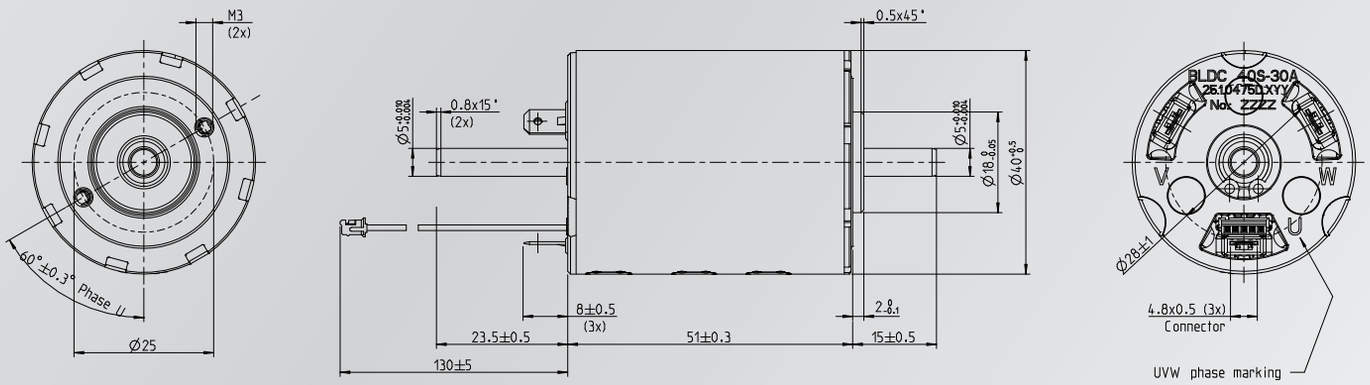

General informations

- **Class of protection:** IP20
- **Mounting position:** free
- **Duty cycle:** up to 100 %
- **Bearing system:** Ball Bearings
- **Torque Constant:** 64,7 mNm/A
- **Weight:** 0,3 kg
- **Rotor Inertia:** 50 gcm²
- **Oper. Temp. Range:** -20 °C to +45 °C
- **Max. Temp. Rise:** 70 K
- **Direction of Rotation:** CW / CCW
- **Class of Insulation:** H
- **Shaft Material:** Steel, not hardened
- **Number of Poles:** 16

Options

- **Integrated Drive Electro.:** Yes
- **Planetary Gearbox:** Yes
- **Sensorless Operation:** Yes
- **Shaft hardened (Surface):** Yes

Features

- High power-to-volume ratio
- High efficiency at duty point
- Extremely reliable

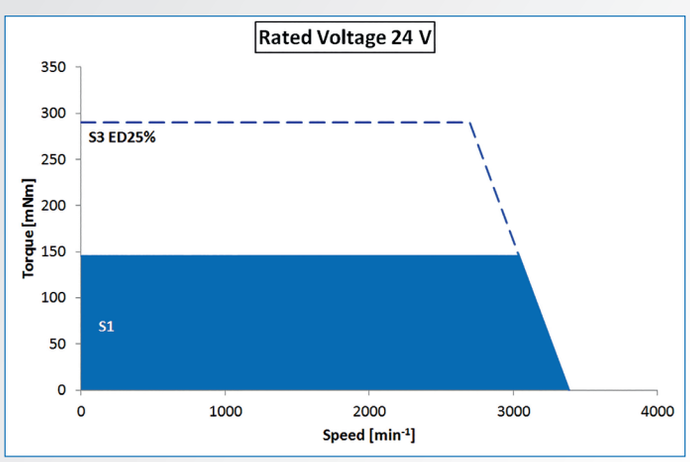

NMB Technologies Corporation
A MinebeaMitsumi Group Company
39830 Grand River Avenue
Novi, MI 48375
Tel: 248-919-2250
eMail: info@nmbtc.com
nmbtc.com

MinebeaMitsumi
Passion to Create Value through Difference

© PM DM 2015, technical changes reserved