

CONNECT AND PROTECT

Inpac

nVent

SCHROFF

19" chassis – Inpac

OVERVIEW

MAIN KATALOG

Cabinets 1

Wall mounted cases 2

Accessories for cabinets and wall mounted cases . . 3

Climate control . . 4

Electronics cases 5

Subracks/ 19" chassis 6

Front panels, plug-in units 7

Systems 8

Power supply units 9

Backplanes 10

Connectors, front panel component system 11

Appendix 12



02192001



02192005

Robust 19" chassis, also for board assembly



02196001

Assembly with boards and hinged front panel

STANDARDS

- External dimensions in accordance with:
  IEC 60297-3-101
- Ingress protection IP 20 to IEC 60529
- GND/earthing connectors to:
  DIN EN 50178/VDE 0160
  DIN EN 60950/VDE 0805
  DIN EN 61010-1/VDE 0411 part 1
  DIN EN 61010-1A2/VDE 0411 part 1/A1

19" chassis – Inpac

OVERVIEW

19" CHASSIS WITH HIGH MECHANICAL STABILITY

- **Also usable as desk-top case**
- **Robust cases from aluminium die-cast frames to front and rear**
- **Flexible assembly for standardised board formats or individually, e.g. for mounting plates**
- **Cost benefit with mounting service and custom processing in ServicePLUS**



02192002

19" CHASSIS/DESK-TOP ENCLOSURE

- 2 U, 3 U, 4 U and 6 U heights



02192003

INPAC BUILT INTO 19"CABINET

SERVICEPLUS

e.g. individual configuration and assembly from 1 piece
e.g. printing
e.g. cut-outs in front or rear panels or cover plates
e.g. modification (special colours)
e.g. custom solutions (special depths, electromagnetically shielded applications)

Overview 6.128

inpac
19" chassis **6.130**

Accessories
Full-width front panels **6.131**
Full-width rear panels **6.131**
Support rails **6.132**
Horizontal rails . . . **6.132**
Front handles **6.133**
GND/earthing kit . . . **6.133**
Guide rails **6.134**
Dimensions 6.136

19" chassis – Inpac

19" CHASSIS



02192006

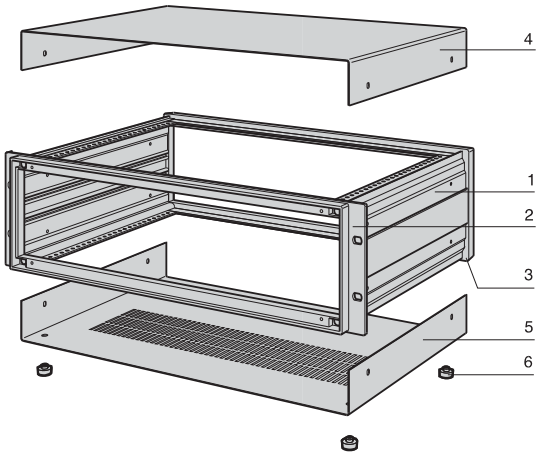

ipa30632

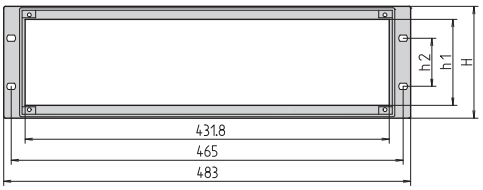

IPA30635

h1 = useable height

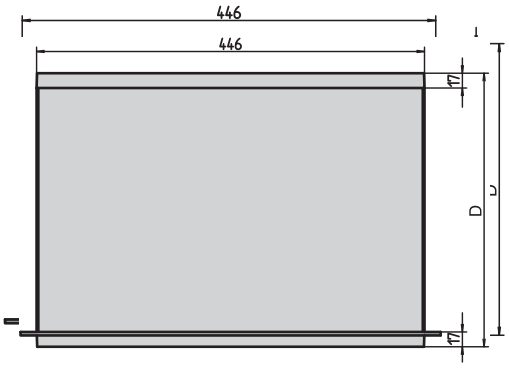

IPA30704



IPA30706

- For assembly with 19" components or individually with mounting plates
- Three rows ventilation slots in base for air inlet

DELIVERY INCLUDES (Kit)

Item	Qty	Description
1	2	Side panel, Al extrusion, RAL 7030, at 6 U: 2 Al corner profiles, 1 divider plate (steel plate)
2	1	Front frame, Al die-cast, RAL 7030, rear side with counterbores for drill holes to mount handles and front panels
3	1	Rear frame, Al die-cast, RAL 7030
4	1	Cover plate, St, 1 mm, zinc-coated RAL 7035, with GND/earthing connection
5	1	Base plate, St, 1 mm, zinc-coated RAL 7035, with GND/earthing connection
6	4	Case foot with anti-slip protection, PC, UL 94 V-0
7	1	Assembly kit

ORDER INFORMATION

Height H U	Height H mm	h mm	h1 mm	h2 mm	Depth D mm	Part no.
2	88.0	86.0	57.5	76.2	254.5	**10828-171**
2	88.0	86.0	57.5	76.2	314.5	**10828-172**
2	88.0	86.0	57.5	76.2	374.5	**10828-173**
3	132.5	130.5	102.0	57.2	254.5	**10828-151**
3	132.5	130.5	102.0	57.2	314.5	**10828-152**
3	132.5	130.5	102.0	57.2	374.5	**10828-153**
3	132.5	130.5	102.0	57.2	434.5	**10828-154**
4	177.0	174.5	146.5	101.6	254.5	**10828-156**
4	177.0	174.5	146.5	101.6	314.5	**10828-157**
4	177.0	174.5	146.5	101.6	374.5	**10828-158**
4	177.0	174.5	146.5	101.6	434.5	**10828-159**
6	265.9	263.5	235.4	190.5	374.5	**10828-168**
6	265.9	263.5	235.4	190.5	434.5	**10828-169**

NOTE

- Max. installation space when fitting 19" components is 75 HP
- Scope of delivery includes screws to fix rear and front panels
- Cover- and base plate available in other colors
- Modifications such as breakouts or other dimensions possible
- or mounting / extension parts, see the following pages

19" chassis – Inpac

FRONT PANEL

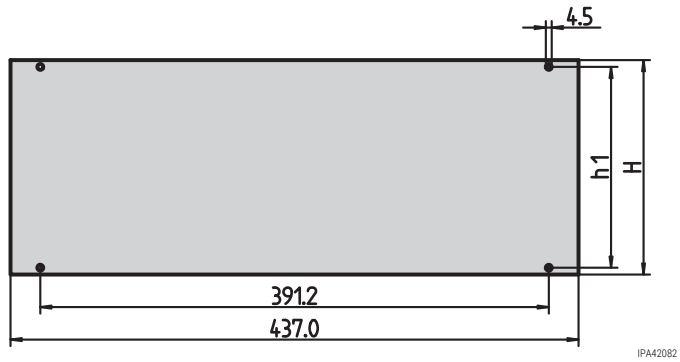

DELIVERY COMPRISES

Item	Qty	Description
1	1	Front panel, Al, 2.5 mm, anodised, cut edges untreated

ORDER INFORMATION

Height U	Height H mm	h1 mm	Part no.
2	76.0	65.6	**30828-055**
3	120.5	110.0	**30828-058**
4	165.0	154.5	**30828-061**
6	253.8	243.4	**30828-067**

Note

- The assembly kit for the front panel is included with the 19" chassis

FRONT PANEL, BOTTOM-HINGED

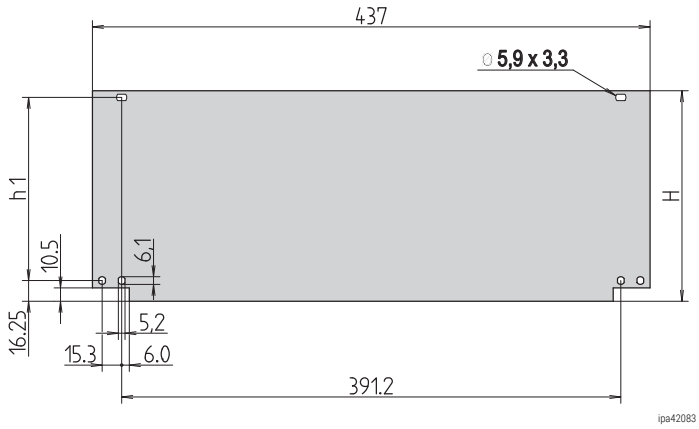

DELIVERY COMPRISES

Item	Qty	Description
1	1	Front panel, hinged, Al, 2.5 mm, anodised, cut edges untreated

ORDER INFORMATION

Height U	Height H mm	h1 mm	Part no.
2	76.0	54.5	**30828-085**
3	120.5	99.0	**30828-088**
4	165.0	143.5	**30828-091**
6	253.8	232.3	**30828-097**
Hinge for front panel PPE, UL 94 V-0, PU 1 kit (includes fixing material kit and 2 collar screws)			**20828-028**

Note

- Please order hinge for front panel separately

REAR PANEL WITH VENTILATION OPENINGS

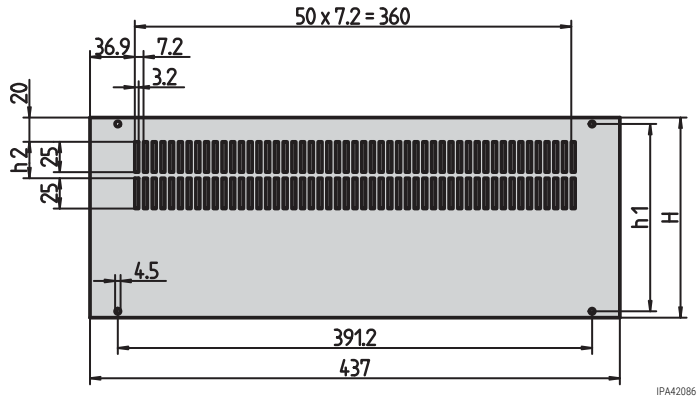

DELIVERY COMPRISES (kit)

Item	Qty	Description
1	1	Rear panel, incl. assembly kit, Al, 2 mm, anodised, cut edges untreated

ORDER INFORMATION

Height U	Height H mm	h1 mm	h2 mm	Part no.
2	76.0	65.6	–	**30828-070**
3	120.5	110.0	–	**30828-073**
4	165.0	154.5	–	**30828-076**
6	253.8	243.4	30	**30828-082**

Note

- The scope of delivery of the 19" chassis includes an assembly kit for the front panel

SUPPORT RAIL FOR GUIDE RAILS

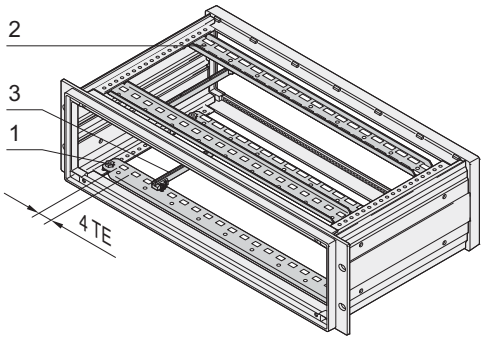

IPA30639

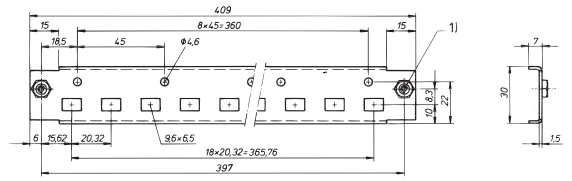

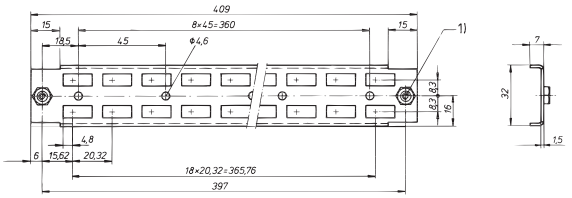

a3-308xx

Dimension drawing top: Front support rail,
dimension drawing bottom: rear support rail;
1) bush M4, pressed-in

- 4 support rails to fix PCBs with guide rails
- Support rail can also be used to fix a custom mounting plate

ORDER INFORMATION

Item	Description	Part no.
1	front support rail, St, 1.5 mm, blue-passivated, 1 piece	**30828-165**
2	rear support rail, St, 1.5 mm, blue-passivated, 1 piece	**30828-174**
Accessories		
Guide rail 160 mm (Item 3), PBT, UL 94 V-0, with integrated fixture for connector to EN 60603 (DIN 41612), PU 1 pair		**60817-078**
Guide rail 220 mm (Item 3), PBT, UL 94 V-0, with integrated fixture for connector to EN 60603 (DIN 41612), PU 1 pair		**60817-079**
Screw for mounting of support rails, M4 × 8, flathead bolts with posidrive, PU 100 pieces		**21100-677**

- Guide rails see page 6.134

HORIZONTAL RAIL FOR GUIDE RAILS, BACKPLANE AND CONNECTOR MOUNTING

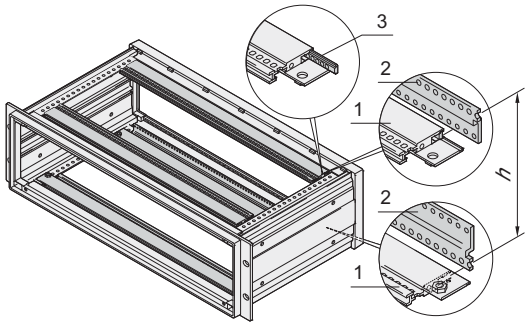

IPA30640

Item 1: horizontal rail, item 2: Z-rail, item 3: threaded insert

h U	Bolt-on dimension of backplane mm
2	75.40
3	119.80
4	164.30
6	252.90

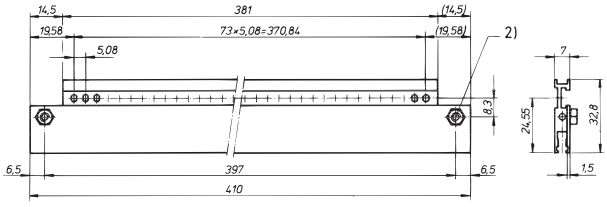

A4-587

2) bush M4, pressed-in

- 4 horizontal rails to fix guide rails (for PCBs) and for backplane or connector mounting
- Useable width 75 HP

ORDER INFORMATION

Item	Description	Qty/PU	Part no.
1	Horizontal rail 75 HP, Al extrusion, anodised	1	**30828-128**
Accessories			
Z-rail (item 2), Al extrusion, anodised, 1 piece			**30814-513**
Threaded insert (item 3), St, zinc-plated (blue), 1 piece			**30819-604**
Screw to fix horizontal rails, M4 × 8, Pozidrive flathead screw, 100 pieces			**21100-677**
Cheesehead screw with slot M2.5 × 6, DIN 84, PU 100 pieces M2.5 × 6, DIN 84, 100 pieces			**21100-146**

Note

- Threaded inserts cannot be used at front
- For backplane mounting, threaded inserts are required in the rear horizontal rails
- For connector mounting, threaded inserts and Z-rails are required in the rear horizontal rails

- Guide rails see page 6.134

FRONT HANDLES

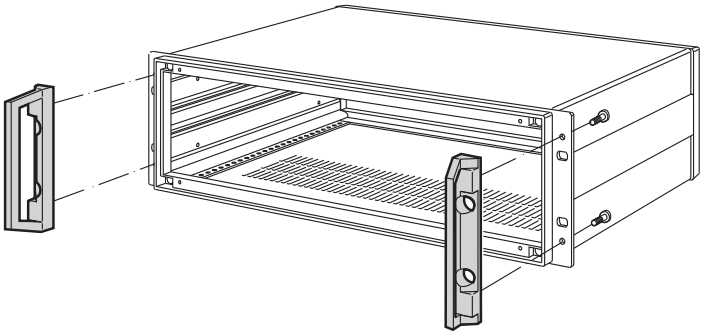

IPA30636

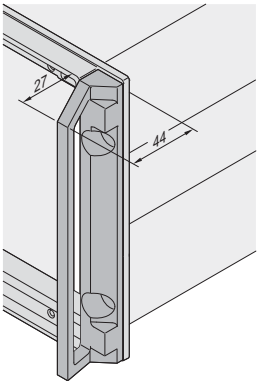

02108050

- Load-carrying capacity 35 kg per pair

DELIVERY COMPRISES (kit)

Item	Qty	Description
1	2	Front handle, Al die-cast, powder-coated, RAL 7030, incl. assembly kit

ORDER INFORMATION

Height U	Part no.
3	**20828-127**
4	**20828-128**
6	**20828-129**

GND/EARTHING KIT

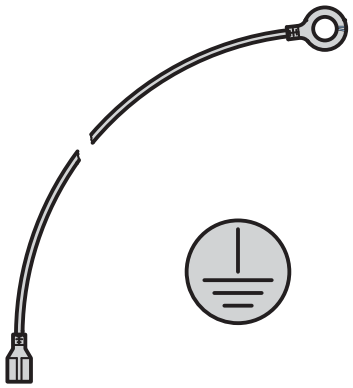

aza43284

- The GND/earthing kit allows VDE-compliant earthing of the case to:
  - DIN EN 50178/VDE 0160
  - DIN EN 60950/VDE 0805
  - DIN EN 61010-1/VDE 0411 Part 1
  - DIN EN 61010-1A2/VDE 0411 Part 1/A
- VDE inspection has been carried out

ORDER INFORMATION

Description	Qty/PU	Part no.
GND/earthing kit, Cu wire, 1.5 mm^2, PVC sleeve, green/yellow, links side panels, top cover, base plate and rear panel	1	**21100-814**

19" chassis – Inpac

GUIDE RAILS



04292012

ORDER INFORMATION

		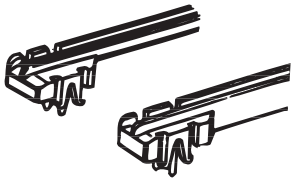 a4-2744X		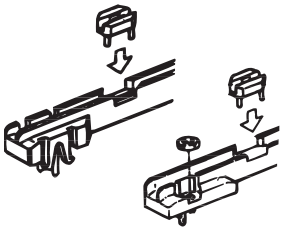 A42744b		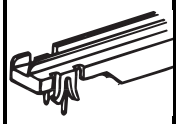 a42744c	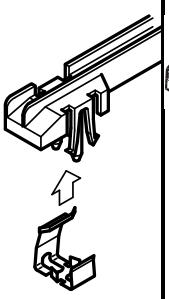 bza44247	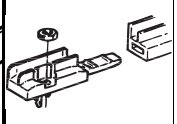 a4-2744d
		Light version, snap-in	Standard version, snap-in	Version with board fixing, snap-in	Version with board fixing, bolt-on	Version for heavy load-carrying capacity, snap-in	Version with ESD clip	Universal version with Al middle section, bolt-on
Board lengths mm mm	Groove width mm mm	Part no. 1 piece (SPQ 50)[1)]	Part no. 1 piece (SPQ 50)[1)]	Part no. 1 piece (SPQ 50)[1)]	Part no. 1 piece (SPQ 50)[1)]	Part no. 1 piece (SPQ 50)[1)]	Part no. Qty/PU 1 piece	Part no. Qty/PU 1 piece
100	2	–	**60817-015**	–	–	–	–	–
160	2	**60817-064**	**60817-103**	**60817-001**	**60817-053**	**60817-102**	**20817-368**	–
160	2.5	–	**60817-076**	–	–	–	–	–
180	2	–	–	**60817-026**	–	–	–	–
220	2	–	**60817-149**	**60817-016**	**60817-083**	**60817-085**	**20817-369**	–
220	2.5	–	–	–	–	**60817-098**	–	–
280	2	–	–	–	–	**60817-080**	–	–
340	2	–	–	–	–	–	–	**20825-120**
400	2	–	–	–	–	–	–	**20825-121**
		1) SPQ (standard pack quantity): Part number includes 1 piece, but delivery is exclusively made in standard pack quantity (SPQ); please order at least the SPQ quantity or a multiple						
Accessories								
Spring clip PPE, UL 94 V-0, red, PU 10 pieces			**21100-553**		**21100-553**	–	–	–
Spring clip PPE, UL 94 V-0, red, PU 100 pieces			**21100-554**		**21100-554**	–	–	–
Assembly parts for 50 guide rails PU (100 screws, 100 nuts)			–		**21101-990**	–	–	**21101-990**

Note

- For a detailed description of the guide rails see our website; please enter part number in "oneclick" search

PCB HANDLE A

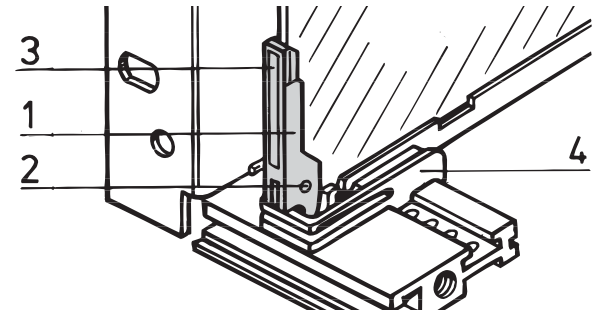

B4-2728

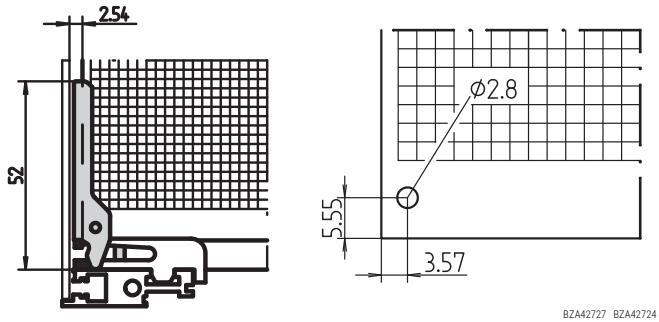

BZA42727 BZA42724

- To be mounted behind front panel, for PCB thickness 1.6 mm
- Insertion and extraction function
- Can be labelled

ORDER INFORMATION

Item	Description	Material	Colour	Qty/PU	Part no.
1	PCB handle A	PBT, UL 94 V-0	red	1 piece (SPQ 10)	**60817-096**
2	Pivot pin DIN 7	Stainless steel	–	100	**21100-671**
3	Identification strip	Polyester film, self-adhesive	matt-silver	100	**21100-672**

SPQ (Standard Pack Quantity): Part number includes 1 piece, but delivery is exclusively made in standard pack quantity: Please order at least 10 pieces PCB handles or a multiple

PCB RETAINER A

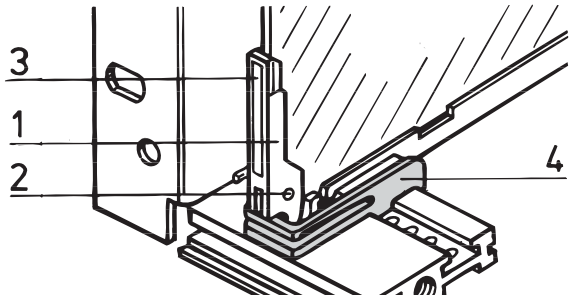

C4-2728

- Can also be used without PCB handle
- Application on top and bottom horizontal rail

ORDER INFORMATION

Item	Description	Material	Colour	Qty	Part no.
4	PCB retainer A for top and bottom	PPE, UL 94 V-0	red	1 piece (SPQ 10)	**60817-097**

SPQ (Standard Pack Quantity): Part number includes 1 piece, but delivery is exclusively made in Standard Pack Quantity: Please order at least 10 pieces PCB retainers or a multiple

PCB RETAINER B

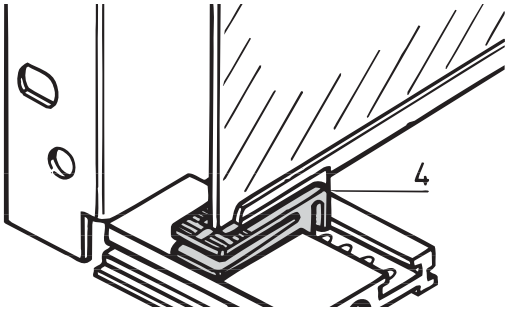

BZA46428

- Can be used on upper and lower horizontal rail, for PCB thickness 1.6 mm
- Can also be used without PCB handle
- Can also be used with guide blocks

ORDER INFORMATION

Item	Description	Material	Colour	Qty	Part no.
4	PCB retainer,bottom	PPE, UL 94 V-0	red	1 piece (SPQ 10)	**60817-054**
4a	PCB securing top	PPE, UL 94 V-0	black	1 piece (SPQ 10)	**60817-071**

SPQ (Standard Pack Quantity): Part number includes 1 piece, but delivery is exclusively made in Standard Pack Quantity: Please order at least 10 pieces PCB retainers or a multiple

19" chassis – Inpac

DIMENSIONS

19" FRONT FRAME

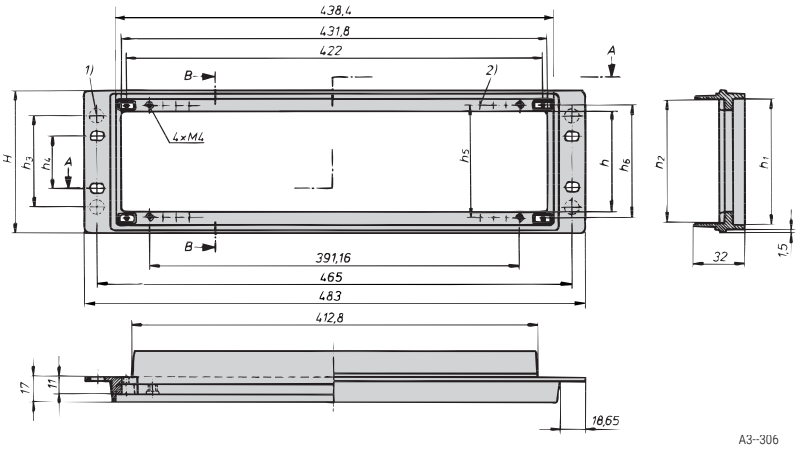

Section A-A

There are counterbores at the rear side of the front frame which can be drilled if required:
1) For handle mounting
2) For mounting of partial-width front panel (grid 5.08 mm)

19" REAR FRAME

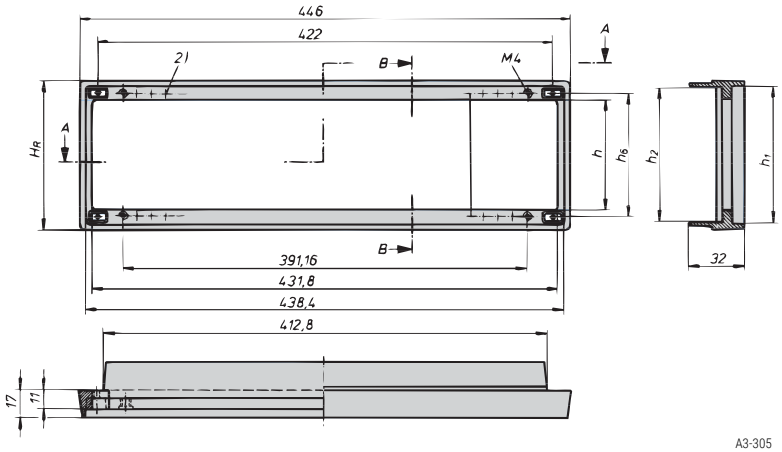

Section A-A

Dimensions table

Height in U	H	H_R	h	h_1	h_2	h_3	h_4	h_5	h_6	h_7
2	88,0	86,0	57,5	77,3	69,8	25,0	76.2	65,5	68,0	68,4
3	132.5	130.5	102.5	121.8	114.3	90,0	57.1	110.0	112,5	112.8
4	177.0	175.0	146.5	166.3	158.8	134.5	101.6	154.5	157,0	157.3
6	265.9	263.9	235.4	255.2	247.7	233.4	190.4	243.4	245,9	245,9

DIMENSIONS

SIDE PANEL

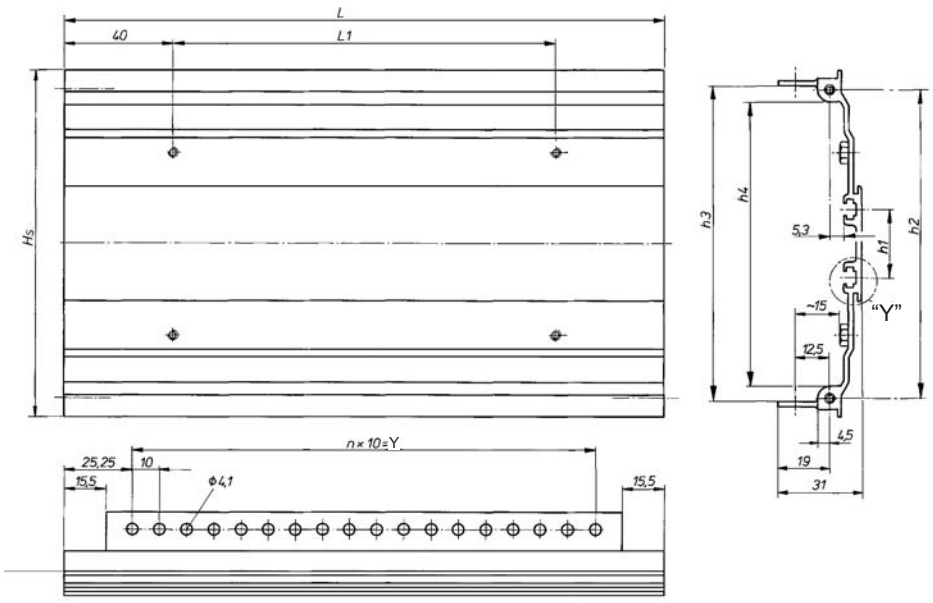

A3--304a

Detail "Y"

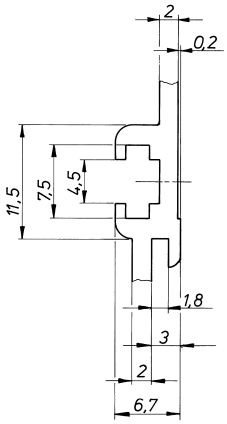

A3--304b

Dimensions table

Height in U	H	h_1	h_2	h_3	h_4	L	L_1	(n)	Y	T
2	82,6	–	68,0	71,4	59,0	220,5	140,5	17,0	170	254,5
2	82,6	–	68,0	71,4	59,0	280,5	200,5	23,0	230	314,5
2	82,6	–	68,0	71,4	59,0	340,5	260,5	29,0	290	374,5
3	127.0	24,0	112,5	115,8	103,5	220,5	140,5	17,0	170	254,5
3	127.0	24,0	112,5	115,8	103,5	280,5	200,5	23,0	230	314,5
3	127.0	24,0	112,5	115,8	103,5	340,5	260,5	29,0	290	374,5
4	171,0	68,5	157,0	160,3	148,0	220,5	140,5	17,0	170	254,5
4	171,0	68,5	157,0	160,3	148,0	280,5	200,5	23,0	230	314,5
4	171,0	68,5	157,0	160,3	148,0	340,5	260,5	29,0	290	374,5
6	260,4	157,1	245,9	248,9	236,5	220,5	140,5	17,0	170	254,5
6	260,4	157,1	245,9	248,9	236,5	280,5	200,5	23,0	230	314,5
6	260,4	157,1	245,9	248,9	236,5	340,5	260,5	29,0	290	374,5

Part number in bold face type: ready for shipping within 2 working days
I type: ready for shipping within 10 working days

North America

Warwick, RI, USA
Tel +1.800.525.4682
San Diego, CA, USA
Tel +1.800.854.7086

Europe, Middle East & India

Straubenhardt, Germany
Tel +49 7082 794 0
Betschdorf, France
Tel +33 3 88 90 64 90
Warsaw, Poland
Tel +48 22 209 98 35
Hemel Hempstead,
Great Britain
Tel +44 1442 24 04 71
Lainate, Italy
Tel +39 02 932 714 1
Dubai, United Arab Emirates
Tel +971 4 37 81 700
Bangalore, India
Tel +91 80 67152000
Istanbul, Turkey
Tel +90 216 250 7374

Asia Pacific

Shanghai, China
Tel +86 21 2412 6943
Singapore
Tel +65 6768 5800
Shin-Yokohama, Japan
Tel +81 45 476 0271

Our powerful portfolio of brands:

CADDY ERICO HOFFMAN RAYCHEM SCHROFF TRACER

nVent

nVent.com/SCHROFF

©2018 nVent. All nVent marks and logos are owned or licensed by nVent Services GmbH or its affiliates. All other trademarks are the property of their respective owners.
nVent reserves the right to change specifications without notice.