NVIDIA BlueField-2 InfiniBand/VPI DPU User Guide

Exported on Dec/12/2022 02:06 PM

Table of Contents

About This Manual 5
Ordering Part Numbers 5
Half-Height Half-Length (HHHL) DPUs 5
Full-Height Half-Length (FHHL) DPUs - P-Series / 2.75GHz 5
Full-Height Half-Length (FHHL) DPUs - E-Series / 2.0GHz 6
Intended Audience 6
Related Documentation 6
Document Conventions 7
Revision History 7
Introduction 8
System Requirements 8
Package Contents 9
Card Package 9
Accessories Kit 9
Features and Benefits 9
Supported Interfaces 14
HHHL DPU Layout and Interface Information 14
FHHL DPU Layout and Interface Information 15
Interfaces Detailed Description 17
DPU IC 17
Networking Ports Interface 17
Networking Ports LEDs Interface 17
PCI Express Interface 18
DDR4 SDRAM On-Board Memory 18
NC-SI Management Interface 18
USB Interfaces 20
BMC Interface 21
1GbE OOB Management Interface 21
External PCIe Power Supply Connector 22
eMMC Interface 23
MMCX RA PPS IN/OUT Interface 23
Hardware Installation 24

Safety Warnings 24
Installation Procedure Overview 25
System Requirements 25
Hardware Requirements 25
Airflow Requirements 26
Software Requirements 26
Safety Precautions 26
Unpacking 26
Pre-Installation Checklist 26
Installation Instructions 27
Cables and Modules 28
Networking Cable Installation 28
UART Cable Installation 29
Identify the DPU in your System 30
On Linux 30
Uninstalling the DPU 30
Driver Installation and Update 32
Troubleshooting 33
General Troubleshooting 33
Specifications 34
MBF2M345A-HECOT / MBF2M345A-HESOT Specifications 34
MBF2M516A-EECOT / MBF2M516A-EEEOT / MBF2M516A-EENOT Specifications 35
MBF2H516A-EENOT / MBF2H516A-EEEOT Specifications 36
MBF2M516C-EECOT / MBF2M516C-EESOT Specifications 37
MBF2H516C-EECOT/ MBF2H516C-EESOT Specifications 38
DPU Mechanical Drawing and Dimensions 39
Bracket Mechanical Drawing 39
Finding the GUID/MAC on the DPU 41
Supported Servers and Power Cords 42
Supported Servers 42
Supported Power Cords 42
Pin Description 44
PCI Express Interface 44
External Power Supply Connector 46

NC-SI Management Interface 46
Table A - NC-SI Connector Pins 47
Table B - NC-SI Connector Pins 50
Table C - NC-SI Connector Pins 54
Engineering Samples Pinouts 58
30-pin NC-SI Connector 58
Document Revision History 60

About This Manual

This user manual describes NVIDIA® BlueField®-2 InfiniBand/VPI Programmable DPU (data processing unit). It provides details as to the interfaces of the board, specifications, required software and firmware for operating the board, and a step-by-step plan of how to bring up the BlueField-2 DPUs.

Ordering Part Numbers

The tables below list the ordering part numbers (OPNs) for available BlueField-2 DPUs in two form factors: Half-Height Half-Length (HHHL) DPUs and Full-Height Half-Length (FHHL) DPUs, respectively.

Half-Height Half-Length (HHHL) DPUs

OPN	Series/ Core Speed	Max Speed	No. of Ports	PCIe Support	Crypto	Secure Boot	1GbE OOB	On-board DDR Memory	On-board eMMC Memory
MBF2M345A-HECOT	E-Series/ 2.0GHz	200GbE/ HDR	1xQSFP56	Gen 4.0 x16	✓	✓	✓	16GB	64GB
MBF2M345A-HESOT	E-Series/ 2.0GHz	200GbE/ HDR	1xQSFP56	Gen 4.0 x16	-	✓	✓	16GB	64GB

Full-Height Half-Length (FHHL) DPUs - P-Series / 2.75GHz

⚠ All the below OPNs require supplementary power to be fed via the DPU's onboard 6-pin ATX power supply connector.

OPN	Series/ Core Speed	Max Speed	No. of Ports	PCIe Support	Crypto	Secure Boot	1GbE OOB	Integrated BMC	External Power	On-board DDR Memory	On-board eMMC Memory (1)
MBF2H516A-EEEOT	P-Series/ 2.75GHz	100GbE/ EDR/ HDR100	2xQSFP56	Gen 4.0 x16	✓	-	✓	-	✓	16GB	64GB
MBF2H516A-EENOT	P-Series/ 2.75GHz	100GbE/ EDR/ HDR100	2xQSFP56	Gen 4.0 x16	-	-	✓	-	✓	16GB	64GB
MBF2H516C-EECOT	P-Series/ 2.75GHz	100GbE/ EDR/ HDR100	2xQSFP56	Gen 4.0 x16	✓	✓	✓	✓	✓	16GB	128GB
MBF2H516C-EESOT	P-Series/ 2.75GHz	100GbE/ EDR/ HDR100	2xQSFP56	Gen 4.0 x16	-	✓	✓	✓	✓	16GB	128GB

(1) eMMC 128GB memory is effectively 40GB with high durability.

Full-Height Half-Length (FHHL) DPUs - E-Series / 2.0GHz

OPN	Series/ Core Speed	Max Speed	No. of Ports	PCIe Support	Crypto	Secure Boot	1GbE OOB	Integrated BMC	On-board DDR Memory	On-board eMMC Memory (1)	PPS IN/ OUT
MBF2M516A-EECOT	E-Series/ 2.0GHz	100GbE/ EDR/ HDR100	2xQSFP56	Gen 4.0 x16	✓	✓	✓	-	16GB	64GB	-
MBF2M516A-EEEOT	E-Series/ 2.0GHz	100GbE/ EDR/ HDR100	2xQSFP56	Gen 4.0 x16	✓	-	✓	-	16GB	64GB	-
MBF2M516A-EENOT	E-Series/ 2.0GHz	100GbE/ EDR/ HDR100	2xQSFP56	Gen 4.0 x16	-	-	✓	-	16GB	64GB	-
MBF2M516C-EECOT	E-Series/ 2.0GHz	100GbE/ EDR/ HDR100	2xQSFP56	Gen 4.0 x16	✓	✓	✓	✓	16GB	128GB	✓
MBF2M516C-EESOT	E-Series/ 2.0GHz	100GbE/ EDR/ HDR100	2xQSFP56	Gen 4.0 x16	-	✓	✓	✓	16GB	128GB	✓

(1) eMMC 128GB memory is effectively 40GB with high durability.

Intended Audience

This manual is intended for the installer and user of these cards. The manual assumes basic familiarity with InfiniBand/VPI network and architecture specifications.

Technical Support

Customers who purchased NVIDIA products directly from NVIDIA are invited to contact us through the following methods:

- E-mail: Enterprisesupport@nvidia.com
- Enterprise Support page: https://www.nvidia.com/en-us/support/enterprise

Related Documentation

InfiniBand Architecture Specification	InfiniBand Trade Association (IBTA) InfiniBand® specification Release 1.3.1, November 2, 2016 and Vol. 2, Release 1.4 - see https://www.infinibandta.org
IEEE Std 802.3 Specification	IEEE Ethernet specification at http://standards.ieee.org
PCI Express Specifications	Industry Standard PCI Express Base and Card Electromechanical Specifications at https://pcisig.com/specifications

NVIDIA LinkX Interconnect Solutions	The NVIDIA® LinkX® product family of cables and transceivers provides the industry's most complete line of products for Cloud, HPC, Web 2.0, Enterprise, telco, storage and artificial intelligence, data center applications. Read more at https://www.nvidia.com/en-us/networking/interconnect/
BlueField DPU OS Manual	NVIDIA® BlueField® DPU operating system (OS) is a reference Linux distribution based on the Ubuntu Server distribution extended to include DOCA runtime libraries, the DOCA Runtime stack for Arm and a Linux kernel that supports various accelerations for storage, networking, and security. As such, customers can run any Linux-based applications in the BlueField software environment seamlessly. The BlueField DPU OS manual is available at: BlueField DPU OS 3.9.2.
DOCA SDK Software Documentation	The NVIDIA DOCA™ SDK enables developers to rapidly create applications and services on top of NVIDIA® BlueField® data processing units (DPUs), leveraging industry-standard APIs. With DOCA, developers can deliver breakthrough networking, security, and storage performance by harnessing the power of NVIDIA's DPUs. NVIDIA DOCA SDK software available at https://docs.nvidia.com/doca/sdk.
BlueField BMC SW Manual	BMC software enables control and management of the baseboard management controller's (BMC) hardware components. The BlueField-2 BMC Software UM is available at: BlueField BMC Software UM.

Document Conventions

When discussing memory sizes, GB and GBytes are used in this document to mean size in Gigabytes. The use of Gb or Gbits (small b) indicates the size in Gigabits. In this document, PCIe is used to mean PCI Express.

Revision History

A list of the changes made to this document is provided in Document Revision History

Introduction

The NVIDIA® BlueField®-2 data processing unit (DPU) is a data center infrastructure on a chip optimized for traditional enterprise, high-performance computing (HPC), and modern cloud workloads, delivering a broad set of accelerated software-defined networking, storage, security, and management services. BlueField-2 DPU enables organizations to transform their IT infrastructures into state-of-the-art data centers that are accelerated, fully programmable and armed with “zero trust” security to prevent data breaches and cyber-attacks. By combining the industry-leading NVIDIA ConnectX®-6 Dx network adapter with an array of Arm® cores, BlueField-2 offers purpose-built, hardware-acceleration engines with full software programmability. Sitting at the edge of every server, BlueField-2 is optimized to handle critical infrastructure tasks quickly, increasing data center efficiency. BlueField-2 empowers agile and high-performance solutions for cloud networking, storage, cybersecurity, data analytics, HPC, and artificial intelligence (AI), from edge to core data centers and clouds, all while reducing the total cost of ownership. The NVIDIA DOCA software development kit (SDK) enables developers to create applications and services for the BlueField-2 DPU rapidly. The DOCA SDK makes it easy and straightforward to leverage DPU hardware accelerators and CPU programmability for better application performance and security.

System Requirements

> The BlueField-2 DPU is designed and validated for operation in data-center servers and other large environments that guarantee proper power supply and airflow conditions. The DPU is not intended for installation on a desktop or a workstation. Moreover, installing the DPU in any system without proper power and airflow levels can impact the DPU's functionality and potentially damage it. Failure to meet the environmental requirements listed in this user manual may void the warranty.

Item	Description
Main-board PCI Express slot	x16 PCIe Gen 4.0 slot.
System Power Supply	Minimum 75W or greater system power supply for all cards.
	P-Series DPU controllers with PCIe Gen 4.0 x16 require an additional 75W through a supplementary 6-pin ATX power supply connector. NOTE: The connector is not included in the package. It should be part of system wiring, or it can be ordered separately as a system accessory.
Operating System	BlueField-2 DPU is shipped with Ubuntu - a Linux commercial operating system - which includes the NVIDIA OFED stack (MLNX_OFED) and is capable of running all customer-based Linux applications seamlessly. BlueField-2 DPU also supports CentOS and has an out-of-band 1GbE management interface. For more information, please refer to the DOCA SDK documentation or NVIDIA BlueField-2 Software User Manual.
Connectivity	• Interoperable with 1/10/25/40/50/100/200 Gb/s Ethernet switches and SDR/DDR/QDR/FDR/EDR/HDR100/HDR InfiniBand switches • Interoperable with copper/optic cables and SR4 modules only • Powered connectors for optical and active cable support

Package Contents

Before unpacking your DPU, it is important to ensure you meet all the system requirements listed above for a smooth installation. Be sure to inspect each piece of equipment shipped in the packing box. If anything is missing or damaged, contact your reseller.

Card Package

Item	Description
Card	1x BlueField-2 DPU
Accessories	1x tall bracket (shipped assembled on the card)
	For MBF2M345A-HECOT/MBF2M345A-HESOT only: 1x short bracket is included in the box (not assembled). For other cards: Short brackets should be ordered separately.

Accessories Kit

> ⚠ The accessories kit should be ordered separately. Please refer to the below table and order the kit based on the desired DPU.

DPU OPN	Accessories Kit OPN	Contents
MBF2H516A-EEEOT MBF2H516A-EENOT MBF2M516A-EECOT MBF2M516A-EEEOT MBF2M516A-EENOT	**MBF20-DKIT**	1x USB 2.0 Type-A to Mini USB Type B cable
		1x USB 2.0 Type-A to 30pin Flat Socket
All the rest of the DPUs	**MBF25-DKIT**	4-pin USB to female USB Type-A cable
		30-pin shrouded connector cable

> ⚠ For FHHL 100Gb/s P-Series DPUs, you need a 6-pin PCIe external power cable to activate the card. The cable is not included in the package. For further details, please refer to External PCIe Power Supply Connector.

For detailed information, see Specifications.

Features and Benefits

> ⚠ This section describes hardware features and capabilities. Please refer to the relevant driver and/or firmware release notes for feature availability.

<table>
<tr><th>Feature</th><th>Description</th></tr>
<tr><td>PCI Express (PCIe)</td><td>Uses PCIe Gen 4.0 (16GT/s) through an x16 edge connector. Gen 1.1, 2.0, and 3.0 compatible.</td></tr>
<tr><td>InfiniBand Architecture Specification v1.4 compliant</td><td>BlueField-3 DPU delivers low latency, high bandwidth, and computing efficiency for high-performance computing (HPC), artificial intelligence (AI), and hyperscale cloud data center applications.
BlueField-3 DPU is InfiniBand Architecture Specification v1.3 compliant.
InfiniBand Network Protocols and Rates:
<table>
<tr><th rowspan="2">Protocol</th><th rowspan="2">Standard</th><th colspan="2">Rate (Gb/s)</th><th rowspan="2">Comments</th></tr>
<tr><th>4x Port (4 Lanes)</th><th>2x Ports (2 Lanes)</th></tr>
<tr><td>HDR/HDR100</td><td>IBTA Vol2 1.4</td><td>212.5</td><td>106.25</td><td>PAM4 256b/257b encoding and RS-FEC</td></tr>
<tr><td>EDR</td><td>IBTA Vol2 1.3.1</td><td>103.125</td><td>51.5625</td><td>NRZ 64b/66b encoding</td></tr>
<tr><td>FDR</td><td>IBTA Vol2 1.2</td><td>56.25</td><td>N/A</td><td>NRZ 64b/66b encoding</td></tr>
</table>
</td></tr>
</table>

<table>
<tr><th>Feature</th><th>Description</th></tr>
<tr><td>Up to 200 Gigabit Ethernet</td><td>BlueField-2 DPU complies with the following IEEE 802.3 standards:
200GbE / 100GbE / 50GbE / 40GbE / 25GbE / 10GbE
<table>
<tr><th>Protocol</th><th>MAC Rate</th></tr>
<tr><td>IEEE802.3ck</td><td>200/100 Gigabit Ethernet
(Include ETC enhancement)</td></tr>
<tr><td>IEEE802.3cd
IEEE802.3bs
IEEE802.3cm
IEEE802.3cn
IEEE802.3cu</td><td>200/100 Gigabit Ethernet
(Include ETC enhancement)</td></tr>
<tr><td>IEEE 802.3bj
IEEE 802.3bm</td><td>100 Gigabit Ethernet</td></tr>
<tr><td>IEEE 802.3by
Ethernet Consortium25</td><td>50/25 Gigabit Ethernet</td></tr>
<tr><td>IEEE 802.3ba</td><td>40 Gigabit Ethernet</td></tr>
<tr><td>IEEE 802.3ae</td><td>10 Gigabit Ethernet</td></tr>
<tr><td>IEEE 802.3cb</td><td>2.5/5 Gigabit Ethernet
(For 2.5: support only 2.5 x1000BASE-X)</td></tr>
<tr><td>IEEE 802.3ap</td><td>Based on auto-negotiation and KR startup</td></tr>
<tr><td>IEEE 802.3ad
IEEE 802.1AX</td><td>Link Aggregation</td></tr>
<tr><td>IEEE 802.1Q
IEEE 802.1P VLAN tags and priority</td><td></td></tr>
<tr><td>IEEE 802.1Qau (QCN)
Congestion Notification
IEEE 802.1Qaz (ETS)
EEE 802.1Qbb (PFC)
IEEE 802.1Qbg
IEEE 1588v2
IEEE 802.1AE (MACSec)
Jumbo frame support (9.6KB)</td><td></td></tr>
</table></td></tr>
<tr><td>On-board Memory</td><td>Quad SPI NOR FLASH - includes 256Mbit for Firmware image.
UVPS EEPROM - includes 1Mbit.
FRU EEPROM - Stores the parameters and personality of the card. The EEPROM capacity is 128Kbit. FRU I2C address is (0x50) and is accessible through the PCIe SMBus.
eMMC - x8 NAND flash (memory size might vary on different DPUs) for Arm boot, OS, and disk space.
DDR4 SDRAM - 16GB/32GB @3200MT/s single-channel DDR4 SDRAM memory. Solder down on board. 64bit + 8bit ECC.</td></tr>
<tr><td>BlueField-2 DPU</td><td>The NVIDIA BlueField-2 DPU integrates eight 64-bit Armv8 A72 cores interconnected by a coherent mesh network, one DRAM controller, and an RDMA intelligent network adapter supporting up to 200Gb/s, an embedded PCIe switch with endpoint and root complex functionality, and up to 16 lanes of PCIe Gen 3.0/4.0.</td></tr>
</table>

Feature	Description
Overlay Networks	To better scale their networks, data center operators often create overlay networks that carry traffic from individual virtual machines over logical tunnels in encapsulated formats such as NVGRE and VXLAN. While this solves network scalability issues, it hides the TCP packet from the hardware offloading engines, placing higher loads on the host CPU. NVIDIA DPU effectively addresses this by providing advanced NVGRE and VXLAN hardware offloading engines that encapsulate and de-capsulate the overlay protocol.
RDMA and RDMA over Converged InfiniBand/VPI (RoCE)	NVIDIA DPU, utilizing IBTA RDMA (Remote Data Memory Access) and RoCE (RDMA over Converged InfiniBand/VPI) technology, delivers low-latency and high-performance over InfiniBand/VPI networks. Leveraging data center bridging (DCB) capabilities as well as advanced congestion control hardware mechanisms, RoCE provides efficient low-latency RDMA services over Layer 2 and Layer 3 networks.
NVIDIA PeerDirect™	PeerDirect communication provides high-efficiency RDMA access by eliminating unnecessary internal data copies between components on the PCIe bus (for example, from GPU to CPU), significantly reducing application run time. NVIDIA DPU's advanced acceleration technology enables higher cluster efficiency and scalability to tens of thousands of nodes.
Quality of Service (QoS)	Support for port-based Quality of Service enabling various application requirements for latency and SLA.
Storage Acceleration	• A consolidated compute and storage network achieves significant cost-performance advantages over multi-fabric networks. Standard block and file access protocols can leverage RDMA for high-performance storage access: NVMe over Fabric offloads for the target machine • BlueField-2 DPU may operate as a co-processor offloading specific storage tasks from the host, isolating part of the storage media from the host, or enabling abstraction of software-defined storage logic using the NVIDIA BlueField-2 Arm cores. On the storage initiator side, NVIDIA BlueField-2 DPU can prove an efficient solution for hyper-converged systems to enable the host CPU to focus on computing while all the storage interface is handled through the Arm cores.
NVMe-oF	Non-volatile Memory Express (NVMe) over Fabrics is a protocol for communicating block storage IO requests over RDMA to transfer data between a host computer and a target solid-state storage device or system over a network. NVIDIA BlueField-2 DPU may operate as a co-processor offloading specific storage tasks from the host using its powerful NVMe over Fabrics Offload accelerator.
SR-IOV	NVIDIA DPU SR-IOV technology provides dedicated adapter resources and guaranteed isolation and protection for virtual machines (VM) within the server.
High-Performance Accelerations	• Tag Matching and Rendezvous Offloads • Adaptive Routing on Reliable Transport • Burst Buffer Offloads for Background Checkpointing
GPU Direct	GPUDirect RDMA is a technology that provides a direct P2P (Peer-to-Peer) data path between the GPU Memory directly to/from the NVIDIA HCA devices. This provides a significant decrease in GPU-GPU communication latency and completely offloads the CPU, removing it from all GPU-GPU communications across the network. NVIDIA DPU uses high-speed DMA transfers to copy data between P2P devices resulting in more efficient system applications
Isolation	BlueField-2 DPU functions as a “computer-in-front-of-a-computer,” unlocking unlimited opportunities for custom security applications on its Arm processors, fully isolated from the host’s CPU. In the event of a compromised host, BlueField-2 may detect/block malicious activities in real-time and at wire speed to prevent the attack from spreading further.

Feature	Description
Cryptography Accelerations	From IPsec and TLS data-in-motion inline encryption to AES-XTS block-level data-at-rest encryption and public key acceleration, BlueField-2 DPU hardware-based accelerations offload the crypto operations and free up the CPU, reducing latency and enabling scalable crypto solutions. BlueField-2 “host-unaware” solutions may transmit and receive data, while BlueField-2 acts as a bump-in-the-wire for crypto.
Securing Workloads	BlueField-2 DPU accelerates connection tracking with its ASAP2 technology to enable stateful filtering on a per-connection basis. Moreover, BlueField-2 includes a Titan IC regular expression (RXP) acceleration engine supported by IDS/IPS tools to detect host introspection and Application Recognition (AR) in real-time.
Security Accelerators	A consolidated compute and network solution based on DPU achieves significant advantages over a centralized security server solution. Standard encryption protocols and security applications can leverage NVIDIA BlueField-2 compute capabilities and network offloads for security application solutions such as Layer4 Stateful Firewall.
Virtualized Cloud	By leveraging BlueField-2 DPU virtualization offloads, data center administrators can benefit from better server utilization, allowing more virtual machines and more tenants on the same hardware while reducing the TCO and power consumption
Out-of-Band Management	The NVIDIA BlueField-2 DPU incorporates a 1GbE RT45 out-of-band port that allows the network operator to establish trust boundaries in accessing the management function to apply it to network resources. It can also be used to ensure management connectivity (including the ability to determine the status of any network component) independent of the status of other in-band network components.
BMC	Some DPUs incorporate local NIC BMC (Baseboard Management Controller) hardware on the board. The BMC SoC (system on a chip) can utilize either shared or dedicated NICs for remote access. The BMC node enables remote power cycling, board environment monitoring, BlueField-2 chip temperature monitoring, board power, and consumption monitoring, and individual interface resets. The BMC also supports the ability to push a boot stream to BlueField-2. Having a trusted onboard BMC that is fully isolated for the host server ensures the highest security for the DPU boards.
PPS IN/OUT	NVIDIA offers a full IEEE 1588v2 PTP software solution, as well as time-sensitive related features called “5T”. NVIDIA PTP and 5T software solutions, are designed to meet the most demanding PTP profiles. BlueField-2 incorporates an integrated Hardware Clock (PHC) that allows BlueField-2 to achieve sub-20u Sec accuracy and offers many timings-related functions such as time-triggered scheduling or time-based SND accelerations. The PTP part supports the subordinate clock, master clock, and boundary clock. BlueField-2 PTP solution allows you to run any PTP stack on your host and on the DPU arm. The MMCX on the board allows customers to connect an RF cable without occupying space on the external bracket. Enabled in MBF2M516C-EESOT and MBF2M516C-EECOT.

Supported Interfaces

This section describes the DPU-supported interfaces. Each numbered interface that is referenced in the figures is described in the following table with a link to detailed information.

> ⚠ The below figures are for illustration purposes only and might not reflect the current revision of the DPU.

HHHL DPU Layout and Interface Information

Interfaces of MBF2M345A-HECOT, MBF2M345A-HECOT

Component Side	*Print Side*
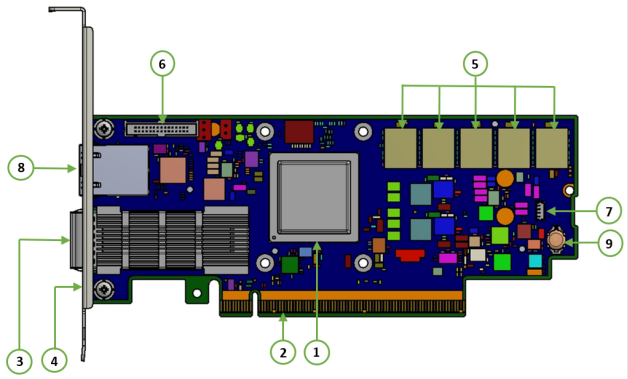	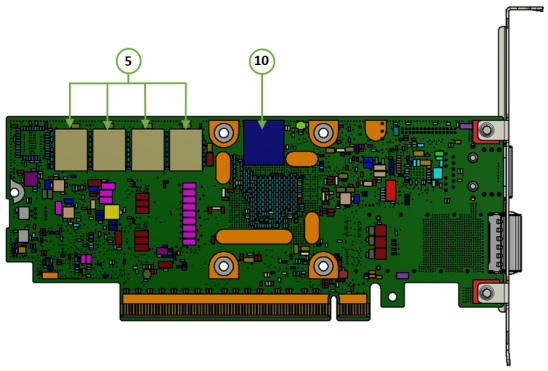

Item	Interface	Description
1	DPU	DPU IC 8 cores
2	PCI Express Interface	PCIe Gen 4.0 through an x16 edge connector
3	Networking Interface	Network traffic is transmitted through the DPU QSFP56 connector. The QSFP56 connectors allow for the use of modules, and optical and passive cable interconnect solutions.
4	Networking Ports LEDs Interface	One bi-color LED per port for the link and physical status
5	DDR4 SDRAM On-Board Memory	8 units of SDRAM for a total of 16GB @ 3200MT/s single DDR4 channel, 64bit + 8bit ECC, solder-down memory
6	NC-SI Management Interface	Connection for remote sideband management
7	USB 4-pin vertical connector (default)	Mounted on the DPU for OS image loading
8	1GbE OOB Management Interface	1GbE BASE-T OOB management interface
9	RTC Battery	Battery holder for RTC
10	eMMC Interface	x8 NAND flash

FHHL DPU Layout and Interface Information

Interfaces of MBF2H516A-EEEOT, MBF2H516A-EENOT, MBF2M516A-EECOT, MBF2M516A-EEEOT and MBF2M516A-EENOT

Component Side	*Print Side*
	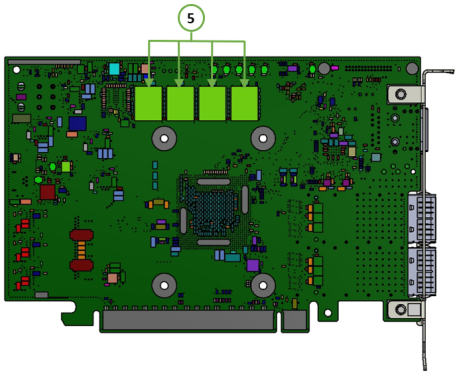

Item	Interface	Description
1	DPU	DPU IC 8 cores
2	PCI Express Interface	PCIe Gen 4.0 through an x16 edge connector
3	Networking Ports	The network traffic is transmitted through the DPU QSFP56 connectors. The QSFP56 connectors allow the use of modules, optical and passive cable interconnect solutions.
4	Networking Ports LEDs Interface	One bi-color I/O LED per port to indicate link and physical status
5	DDR4 SDRAM On-Board Memory	8 units of SDRAM for a total of 16GB @ 3200MT/s single DDR4 channel, 64bit + 8bit ECC, solder-down memory
6	NC-SI Management Interface	Connection for remote sideband management
7	Mini USB Type B Interface	Used for OS image loading
8	1GbE OOB Management Interface	1GbE BASE-T OOB management interface
9	External PCIe Power Supply Connector	An external 12V power connection through a 6-pin ATX connector. **NOTE**: This connector is present on FHHL P-Series DPUs only. It is not present on FHHL E-Series DPUs.
10	RTC Battery	Battery holder for RTC
11	eMMC Interface	x8 NAND flash

Interfaces of MBF2H516C-EECOT, MBF2H516C-EESOT, MBF2M516C-EECOT and MBF2M516C-EESOT

Component Side	*Print Side*
	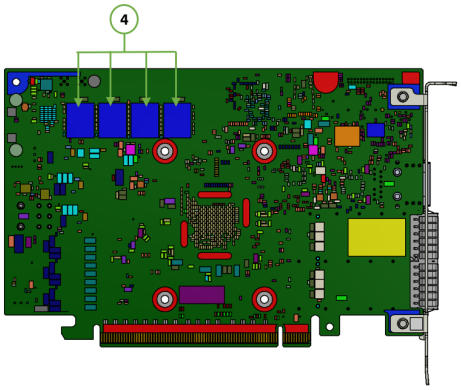

Item	Interface	Description
1	DPU	DPU IC 8 cores
2	PCI Express Interface	PCIe Gen 4.0 through an x16 edge connector
3	Networking Ports	The network traffic is transmitted through the DPU QSFP56 connectors. The QSFP56 connectors allow the use of modules, optical and passive cable interconnect solutions.
4	Networking Ports LEDs Interface	One bi-color I/O LED per port to indicate link and physical status
5	DDR4 SDRAM On-Board Memory	8 units of SDRAM for a total of 16GB @ 3200MT/s single DDR4 channel, 64bit + 8bit ECC, solder-down memory
6	NC-SI Management Interface	Connectivity for remote sideband management (NC-SI over RBT). The NC-SI connector type differs per the product HW version: In the Engineering samples, a 30-pin NC-SI connector is populated, whereas in HW versions B200 and up, a 20-pin NC-SI connector is populated.
7	USB 4-pin vertical connector	Used for OS image loading
8	1GbE OOB Management Interface	1GbE BASE-T OOB management interface
9	External PCIe Power Supply Connector	An external 12V power connection through a 6-pin ATX connector. **NOTE**: This connector is present on FHHL P-Series DPUs only. It is not present on FHHL E-Series DPUs.
10	RTC Battery	Battery holder for RTC
11	eMMC Interface	x8 NAND flash
12	BMC	Embedded BMC on DPU
13	MMCX RA PPS IN/OUT	Enables PPS IN/OUT

Interfaces Detailed Description

DPU IC

NVIDIA® BlueField®-2 DPU is a family of advanced DPU IC solutions that integrate a coherent mesh of 64-bit Arm v8 A72 cores, an NVIDIA® ConnectX®-6 Dx network adapter front-end, and a PCI Express switch into a single chip. The powerful DPU IC architecture includes an Armv8 multicore processor array and enables customers to develop sophisticated applications and highly differentiated feature sets. leverages the rich Arm software ecosystem and introduces the ability to offload the x86 software stack.

At the heart BlueField-2, the ConnectX-6 Dx network offload controller with RDMA and RDMA over Converged Ethernet (RoCE) technology delivers cutting-edge performance for networking and storage applications such as NVMe over Fabrics. Advanced features include an embedded virtual switch with programmable access lists (ACLs), transport offloads, and stateless encaps/decaps of NVGRE, VXLAN, and MPLS overlay protocols.

Encryption

> ⚠ Applies to Crypto enabled OPNs.

DPU addresses the concerns of modern data centers by combining hardware encryption accelerators with embedded software and fully integrated advanced network capabilities, making it an ideal platform for developing proprietary security applications. It enables a distributed security architecture by isolating and protecting each individual workload and providing flexible control and visibility at the server and workload level, controlling risk at the server access layer. builds security into the DNA of the data center and enables prevention, detection, and response to potential threats in real-time. The DPU can deliver powerful functionality, including encryption of data-in-motion, bare-metal provisioning, a stateful L4 firewall, and more.

Networking Ports Interface

The network ports of the DPU are compliant with the InfiniBand and the IEEE 802.3 Ethernet standards listed in Features and Benefits. Traffic is transmitted through the cards' QSFP56 connectors. By default, the port cages of this group of OPNs are set to operate in QSFP28 mode (default card firmware setting). BlueField-2 DPUs support copper/optic and SR4 modules only.

Networking Ports LEDs Interface

There is one bicolor (Yellow and Green) I/O LED per port to indicate speed and link status.

State	Bi-Color LED (Yellow/Green)	
Beacon command for locating the adapter card	1Hz blinking Yellow	

<table>
<tr><th>State</th><th>Bi-Color LED (Yellow/Green)</th><th></th></tr>
<tr><td>Error</td><td>4Hz blinking Yellow Indicates an error with the link. The error can be one of the following:
<table>
<tr><th>Error Type</th><th>Description</th><th>LED Behavior</th></tr>
<tr><td>I²C</td><td>I²C access to the networking ports fails</td><td>Blinks until error is fixed</td></tr>
<tr><td>Over-current</td><td>Over-current condition of the networking ports</td><td>Blinks until error is fixed</td></tr>
</table></td><td></td></tr>
<tr><td>Physical Activity</td><td>Blinking Green</td><td></td></tr>
<tr><td>Link Up</td><td>Solid Green</td><td></td></tr>
<tr><td>Physical Up (InfiniBand Mode Only)</td><td>Solid Yellow</td><td></td></tr>
</table>

PCI Express Interface

The DPU supports PCI Express Gen 4.0 (1.1, 2.0 and 3.0 compatible) through x16 edge connectors. The following lists PCIe interface features:

- PCIe Gen 4.0, and 3.0, 2.0 and 1.1 compatible
- 2.5, 5.0, or 8.0, or 16.0 GT/s link rate x16 lanes
- Auto-negotiates to x16, x8, x4, x2, or x1
- Support for MSI/MSI-X mechanisms

DDR4 SDRAM On-Board Memory

The DPU incorporates 16GB @ 3200MT/s single DDR4 channel, 64bit + 8bit ECC, solder-down memory.

NC-SI Management Interface

The DPU enables the connection of a Baseboard Management Controller (BMC) to a set of Network Interface Controller (NICs) to enable out-of-band remote manageability. The NC-SI management is supported over RMII and has a connector on the DPU. For connecting to the NCSI RBT interface on the 20 or 30-pin connector, a customized cable is needed based on the NC-SI Management Interface pinouts.

The below table specifies the maximum trace lengths on the board per board type. Please take the maximum trace length on the board into consideration in your design.

> The USB to UART cable is not used for NC-SI management purposes.

DPU OPN	Maximum Trace Length on the Board
MBF2M516C-EECOT MBF2M516C-EESOT MBF2H516C-EECOT MBF2H516C-EESOT	5 inch in 30-pin connector 10 inch in 20-pin connector
MBF2M345A-HECOT MBF2M345A-HESOT	3.3inch
MBF2H516A-EEEOT MBF2H516A-EENOT MBF2M516A-EECOT MBF2M516A-EEEOT MBF2M516A-EENOT	6inch

UART Interface Connectivity

A UART debug interface is available on the DPU cards via the NC-SI connector. The below table describes the UART interface location and connectivity per the NC-SI connector type on the DPU you have purchased.

<table>
<tr><th>NC-SI Connector Type</th><th>UART Interface Location and Connectivity</th></tr>
<tr><td>30-pin</td><td>For DPUs with onboard BMC, the UART interface is that of the BlueField-2 device. For DPUs without onboard BMC, the UART interface is that of the NIC BMC device.
<table>
<tr><th>NC-SI Connector Pin #</th><th>The signal on DPU without BMC</th><th>The signal on DPU with BMC</th></tr>
<tr><td>30</td><td>BF_UART0_RX</td><td>BMC_RX5</td></tr>
<tr><td>28</td><td>BF_UART0_TX</td><td>BMC_TX5</td></tr>
<tr><td>25</td><td>GND</td><td>GND</td></tr>
</table>
Please note the following:
The UART interface is compliant with the TTL 3.3V voltage level. A USB to UART cable that supports TTL voltage levels should be used to connect the UART Interface for Arm console access - see example below. Please refer to UART Cable Installation for installation instructions.

Warnings:

Once a cable is plugged into the UART interface, its other side must be plugged into a USB connector. Leaving the USB side unconnected might lead to unexpected behavior of the DPU card.
It is prohibited to connect any RS-232 cable directly! Only TTL 3.3V voltage level cables are supported.
The USB to UART cable is not used for NC-SI management purposes.
</td></tr>
<tr><td>20-pin</td><td>DPUs with onboard BMC hardware: The UART interface is that of the NIC BMC device.
<table>
<tr><th>NC-SI Connector Pin #</th><th>The signal on DPU with BMC</th></tr>
<tr><td>14</td><td>BMC_RX5</td></tr>
<tr><td>16</td><td>BMC_TX5</td></tr>
<tr><td>18</td><td>GND</td></tr>
</table></td></tr>
</table>

USB Interfaces

The USB interface is used to load operating system images. The following table list the types of onboard USB interfaces per DPU part number.

OPN	USB Interface Type	USB Cable
MBF2M345A-HECOT MBF2M345A-HESOT MBF2M516C-EECOT MBF2M516C-EESOT MBF2H516C-EECOT MBF2H516C-EESOT	USB 4-pin vertical connector	Use a 4-pin male connector to a male Type-A cable to connect to the board. The cable is not included in the shipped DPU card box and should be ordered separately as part of the accessories kit (P/N: MBF25-DKIT). 
MBF2H516A-EEEOT MBF2H516A-EENOT MBF2M516A-EECOT MBF2M516A-EEEOT MBF2M516A-EENOT	Mini USB Type-B connector	Use a standard USB Type-B to connect.

BMC Interface

> ⚠ Applicable to MBF2H516C-EECOT, MBF2H516C-EESOT, MBF2M516C-EECOT and MBF2M516C-EESOT.

Some DPUs incorporate local NIC BMC (Baseboard Management Controller) hardware on the board. The BMC SoC (system on a chip) can utilize either shared or dedicated NICs for remote access. The BMC node enables remote power cycling, board environment monitoring, BlueField-2 chip temperature monitoring, board power, and consumption monitoring, and individual interface resets. The BMC also supports the ability to push a boot stream to BlueField-2.

Having a trusted onboard BMC that is fully isolated from the host server ensures the highest security for the DPU boards.

For more information, please refer to Connecting to BMC Interfaces.

1GbE OOB Management Interface

The DPU incorporates a 1GbE RJ-45 out-of-band port that allows the network operator to establish trust boundaries in accessing the management function to apply it to network resources. It can also be used to ensure management connectivity (including the ability to determine the status of any network component) independent of the status of other in-band network components.

> ⚠ 10Mb/s and 100Mb/s modes are not supported on this interface.

For DPUs with integrated BMC: 1GbE OOB Management can be performed via the BlueField-2 device or the integrated BMC.

1GbE OOB Management LEDs Interface

There are 2 OOB management LEDs, one green and one amber/yellow. The following table describes LED behavior for DPUs with or with onboard BMC.

LED Indications		Link Activity	
Green LED	**Amber/Yellow LED**	**DPUs with BMC**	**DPUs without BMC**
OFF	OFF	Link off	Link off
ON	OFF	1 Gb/s link / No activity	Link on (any speed *) / No activity
Blinking	OFF	1 Gb/s link / Activity (RX,TX)	1 Gb/s link / Activity (RX,TX)
OFF	ON	Not supported	100 Mb/s link / No activity
OFF	Blinking		100 Mb/s link / Activity (RX,TX)
ON	ON		10 Mb/s link / No activity
Blinking	Blinking		10 Mb/s link / Activity (RX,TX)

* On DPUs without BMC, speeds can be 10 Mb/s, 100 Mb/s or 1Gb/s.

External PCIe Power Supply Connector

Applies to FHHL P-Series DPUs only, OPNs MBF2H516A-CEEOT and MBF2H516A-CENOT.

FHHL P-Series DPUs require supplementary power from a 6-pin ATX power supply connector in addition to a minimum of 75W power through the x16 PCIe interface. The power cable should be supplied by the customer.

The FHHL DPUs incorporate an external 12V power connection through a 6-pin ATX connector. The DPU includes a special circuitry that provides current balancing between the two power supplies; the 12V from the PCIe x16 standard slot and the 12V from the ATX 6-pin connector. Since the power provided by the PCIe golden fingers is limited to 75W, a total maximum of up to 150W is enabled through both the ATX 6-pin connector and the PCIe x16 golden fingers. The actual power consumption is in accordance to the mode of operation of the DPU and is split evenly between the two power sources.

For the external PCIe power supply pins, please refer to External PCIe Power Supply Connector Pins.

RTC Battery

The DPU incorporates a COIN TYPE LITHIUM BATTERY CR621 for RTC (Real Time Clock).

eMMC Interface

The DPU incorporates an eMMC interface on the card's print side. The eMMC is an x8 NAND flash and is used for Arm boot, operating system storage and disk space. Memory size is either 64GB or 128GB, where 128GB is effectively 40GB with high durability.

MMCX RA PPS IN/OUT Interface

> ⚠ Applies to the following OPNs: MBF2H516C-EECOT, MBF2H516C-EESOT, MBF2M516C-EECOT, MBF2M516C-EESOT.

The DPU incorporates an integrated Hardware Clock (PHC) to allow the DPU to achieve sub-20u Sec accuracy and also offers many timing-related functions such as time-triggered scheduling or time-based SND accelerations (time-based ASAP^2). Furthermore, 5T technology enables the software application to transmit fronthaul (ORAN) at high bandwidth. The PTP part supports the subordinate clock, master clock, and boundary clock.

The DPU PTP solution allows you to run any PTP stack on your host.

With respect to testing and measurements, selected NVIDIA DPUs allow you to use the PPS-out signal from the onboard MMCX RA connectors; the DPU also allows measuring PTP in scale, with the PPS-In signal. The PTP HW clock on the Network adapter will be sampled on each PPS-In signal, and the timestamp will be sent to the SW.

Hardware Installation

Installation and initialization of the DPU require attention to the mechanical attributes, power specification, and precautions for electronic equipment.

Safety Warnings

Safety warnings are provided here in the English language.

Please observe all safety warnings to avoid injury and prevent damage to system components. Note that not all warnings are relevant to all models.

Note that not all warnings are relevant to all models.

	**General Installation Instructions** Read all installation instructions before connecting the equipment to the power source.
	**Jewelry Removal Warning** Before you install or remove equipment that is connected to power lines, remove jewelry such as bracelets, necklaces, rings, watches, and so on. Metal objects heat up when connected to power and ground and can meltdown, causing serious burns and/or welding the metal object to the terminals.
	**Over-temperature** This equipment should not be operated in an area with an ambient temperature exceeding the maximum recommended: 55°C (131°F). An airflow of 200LFM at this maximum ambient temperature is required for HCA cards and NICs. To guarantee proper airflow, allow at least 8cm (3 inches) of clearance around the ventilation openings.
	**During Lightning - Electrical Hazard** During periods of lightning activity, do not work on the equipment or connect or disconnect cables.
	**Copper Cable Connecting/Disconnecting** Some copper cables are heavy and not flexible, as such, they should be carefully attached to or detached from the connectors. Refer to the cable manufacturer for special warnings and instructions.
	**Equipment Installation** This equipment should be installed, replaced, or serviced only by trained and qualified personnel.
	**Equipment Disposal** The disposal of this equipment should be in accordance to all national laws and regulations.
	**Local and National Electrical Codes** This equipment should be installed in compliance with local and national electrical codes.
	**Hazardous Radiation Exposure** • Caution – Use of controls or adjustment or performance of procedures other than those specified herein may result in hazardous radiation exposure.For products with optical ports. • CLASS 1 LASER PRODUCT and reference to the most recent laser standards: IEC 60 825-1:1993 + A1:1997 + A2:2001 and EN 60825-1:1994+A1:1996+ A2:20

Installation Procedure Overview

The installation procedure of DPU involves the following steps:

Step	Procedure	Direct Link
1	Check the system's requirements.	Refer to System Requirements
2	Pay attention to the airflow consideration within the host system	Refer to Airflow Requirements
3	Follow the safety precautions	Refer to Safety Precautions
4	Unpack the package	Refer to Unpacking
5	Follow the pre-installation checklist	Refer to Pre-Installation Checklist
7	Install the DPU according to the form factor you have purchased.	Refer to Cards Installation
8	Connect cables or modules to the card	Refer to Cables and Modules Installation
9	Identify the DPU in the system	Refer to Identify the DPU in your System

System Requirements

Hardware Requirements

Unless otherwise specified, products are designed to work in an environmentally controlled data center with low levels of gaseous and dust (particulate) contamination.
The operating environment should meet severity level G1 as per ISA 71.04 for gaseous contamination and ISO 14644-1 class 8 for cleanliness level.

The BlueField-2 DPU is designed and validated for operation in data-center servers and other large environments that guarantee proper power supply and airflow conditions.
The DPU is not intended for installation on a desktop or a workstation. Moreover, installing the DPU in any system without proper power and airflow levels can impact the DPU's functionality and potentially damage it. Failure to meet the environmental requirements listed in this user manual may void the warranty.

The below table lists the motherboard and power supply requirements per card form factor.

HHHL DPUs	**E-Series:** Minimum 75W or greater system power supply through the PCIe x16 interface (Relevant for MBF2M345A-HECOT and MBF2M345A-HESOT)
FHHL DPUs	**E-Series:** Minimum 75W or greater system power supply through the PCIe x16 interface (Relevant for MBF2M516A-EECOT, MBF2M516A-EEEOT, MBF2M516A-EENOT, MBF2M516C-EECOT and MBF2M516C-EESOT)
	P-Series: Minimum 75W or greater system power supply through the PCIe x16 interface and an additional 75W through the supplementary 6-pin ATX power supply connector (Relevant for OPNs: MBF2H516A-EEEOT MBF2H516A-EENOT, MBF2H516C-EECOT and MBF2H516C-EESOT).

Airflow Requirements

DPU is offered with one airflow pattern: from the heatsink to the network ports.

> It is prohibited to use port-to-heatsink airflow as it may cause damage to the DPU.

Please refer to the Specifications section for airflow numbers per card model.

Software Requirements

- See Operating Systems/Distributions section under the Introduction section.
- Software Stacks - The DPU is shipped with Linux based Operating System burned on it which includes all needed drivers. For more information, please refer to the Software User Manual.

Safety Precautions

The DPU being installed in a system that operates with voltages that can be lethal. Before opening the case of the system, observe the following precautions to avoid injury and prevent damage to system components.

- Remove any metallic objects from your hands and wrists.
- Make sure to use only insulated tools.
- Verify that the system is powered off and is unplugged.
- It is strongly recommended to use an ESD strap or other antistatic devices.

Unpacking

Check against the package contents list that all the parts have been sent. Check the parts for visible damage that may have occurred during shipping. Please note that the cards must be placed on an antistatic surface.

> Please note that if the card is removed hastily from the antistatic bag, the plastic ziplock may harm the EMI fingers on the networking connector. Carefully remove the card from the antistatic bag to avoid damaging the EMI fingers.

For package contents, please refer to Package Contents.

Pre-Installation Checklist

1. Verify that your system meets the hardware and software requirements stated above.
2. Shut down your system if active.
   Turn off the power to the system, and disconnect the power cord. Refer to the system documentation for instructions. Before you install the DPU, make sure that the system is disconnected from power.

Installation Instructions

This section provides detailed instructions on installing your DPU in a system.

> ⚠ Please note that the following figures are for illustration purposes only.

> ❗ To power up the FHHL P-Series DPUs, you need to connect a PCIe external power cable. The PCIe external power cable should be supplied by the customer. Refer to External Power Supply Connector for pin descriptions.

1. Open the system case.
2. Place the DPU in an available PCI Express slot.

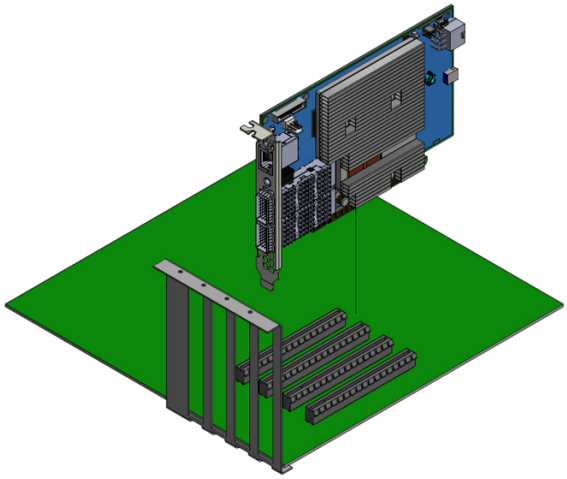

3. Applying even pressure at both corners of the card, insert the DPU into the PCI Express slot until firmly seated.

   > ❗ Do not use excessive force when seating the card, as this may damage the system or the DPU.

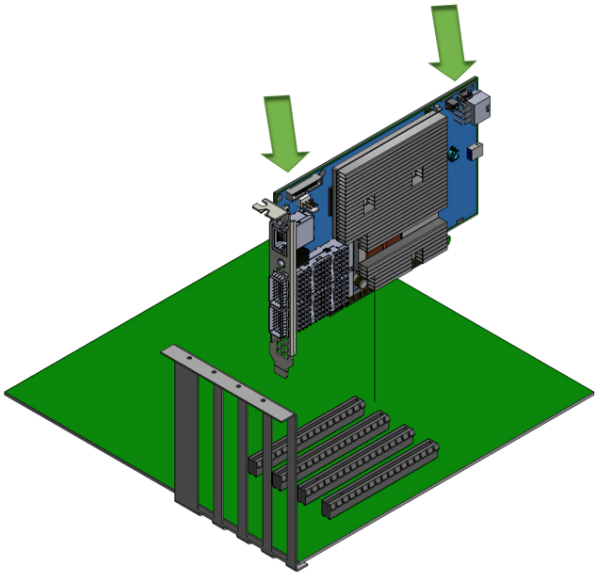

4. When the DPU is properly seated, the port connectors are aligned with the slot opening, and the DPU faceplate is visible against the system chassis.

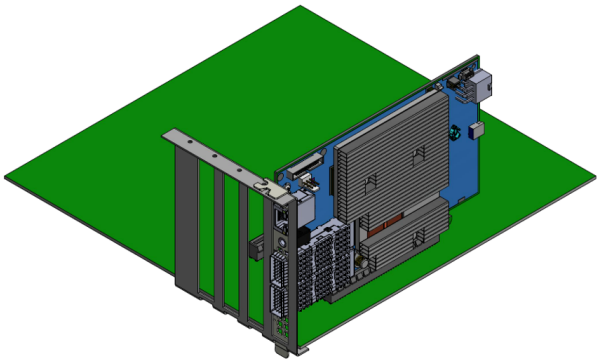

5. Secure the DPU with the screw.

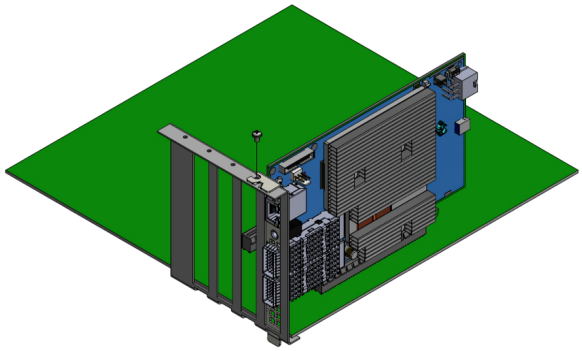

6. For the FHHL 100Gb/s P-Series DPUs, install the PCIe external power cable. Connect the 6-pin power connector from the power supply to the power connector on the top edge of the DPU. Note that the connector and socket on the graphics card have a unique shape and connect one way only.
   For further instructions, please refer to the cable vendor documentation. Please refer to the pinout description in External Power Supply Connector Pins.
7. Close the system case.
8. Install the networking cables. For instructions, please refer to Networking Cable Installation.

> To uninstall the DPU card, see Uninstall DPU.

Cables and Modules

To obtain the list of supported cables for your DPU, please refer to the Cables Reference Table at http://www..com/products/interconnect/cables-configurator.php.

Networking Cable Installation

1. All cables can be inserted or removed with the unit powered on.
2. To insert a cable, press the connector into the port receptacle until the connector is firmly seated.

a. Support the weight of the cable before connecting the cable to the DPU card. Do this by using a cable holder or tying the cable to the rack.
b. Determine the correct orientation of the connector to the card before inserting the connector. Do not try and insert the connector upside down. This may damage the DPU card.
c. Insert the connector into the DPU card. Be careful to insert the connector straight into the cage. Do not apply any torque, up or down, to the connector cage in the DPU card.
d. Make sure that the connector locks in place.

> ⚠ When installing cables make sure that the latches engage.

> Always install and remove cables by pushing or pulling the cable and connector in a straight line with the card.

3. After inserting a cable into a port, the Green LED indicator will light when the physical connection is established (that is, when the unit is powered on and a cable is plugged into the port with the other end of the connector plugged into a functioning port). See Networking Ports LEDs interface under the Supported Interfaces section.
4. After plugging in a cable, lock the connector using the latching mechanism particular to the cable vendor. When data is being transferred the Green LED will blink.
5. Make sure not to impede the air exhaust flow through the ventilation holes. Use cable lengths that allow for routing horizontally around to the side of the chassis before bending upward or downward in the rack.
6. To remove a cable, disengage the locks and slowly pull the connector away from the port receptacle. The LED indicator will turn off when the cable is unseated.

UART Cable Installation

A UART console interface is located on the DPU. Connect the supplied USB 2.0 Type-A to a 30pin Flat Socket cable from this interface to a motherboard/desired server for UART console capabilities. For more information on the NC-SI interface, please refer to UART Interface Connectivity.

> The USB 2.0 Type-A to 30pin Flat Socket cable is intended for internal system use and is sensitive to excessive pulling force and crushing forces. Therefore, proper care must be taken during the installation procedure. The best practice is to install the cable properly the first time around carefully.

> Once a cable is plugged into the UART interface, its other side must be plugged into a USB connector. Leaving the USB side unconnected might lead to unexpected behavior of the DPU card.

1. Make sure the system is powered off.
2. Determine the correct orientation of the UART connector on the card before inserting the cable. Pay attention to the UART cable key as it should guide you to the corresponding mating

connector orientation on the board interface.

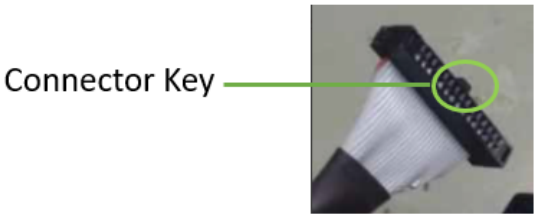

3. Carefully connect the 30 pin connector on the board to the mating cable.
4. Connect the USB cable to the desired interface master, which can be a motherboard or any desired server. Do not leave the USB side unattended.

Identify the DPU in your System

On Linux

Get the device location on the PCI bus by running lspci and locating lines with the string:

```
# lspci |grep -i nox
63:00.0 Ethernet controller: Mellanox Technologies MT42822  integrated ConnectX-6 Dx network controller
63:00.1 Ethernet controller: Mellanox Technologies MT42822  integrated ConnectX-6 Dx network controller
63:00.2 DMA controller: Mellanox Technologies MT42822 BlueField-2 SoC Management Interface
```

⚠ If the name of the DPU installed in the system is not recognized, please run the below command:

```
# update-pciids
```

Uninstalling the DPU

Safety Precautions

The DPU is installed in a system that operates with voltages that can be lethal. Before uninstalling the DPU, please observe the following precautions to avoid injury and prevent damage to system components.

1. Remove any metallic objects from your hands and wrists.
2. It is strongly recommended to use an ESD strap or other antistatic devices.
3. Turn off the system and disconnect the power cord from the server.

Card Removal

Please note that the following images are for illustration purposes only.

1. Verify that the system is powered off and unplugged.
2. Wait 30 seconds.
3. To remove the card, disengage the retention mechanism on the bracket (screws).
4. Holding the DPU from its center, gently pull the DPU out of the PCI Express slot.

5. When the port connectors reach the top of the chassis window, gently pull the DPU in parallel to the motherboard.

Driver Installation and Update

IT administrators who seek to configure, set up, and manage the services and applications running on the DPU should use the BlueField DPU Operating System as driver software. The BlueField DPU card is pre-installed with a BlueField DPU Operating System image. It is recommended to check whether this image is the latest available to enjoy the latest features. Driver image update instructions are provided in the "Updating Repo Package on Host Side" section of the BlueField DPU OS manual.

Application developers who see to create applications and services on top of DPU should use the DOCA SDK. An introduction to DOCA and how to get started with it is available at https://developer.nvidia.com/networking/doca/getting-started. The latest DOCA SDK documentation is available at https://docs.nvidia.com/doca/sdk/.

Troubleshooting

General Troubleshooting

Server unable to find the DPU	• Ensure that the DPU is placed correctly • Make sure the DPU slot and the DPU are compatible Install the DPU in a different PCI Express slot • Use the drivers that came with the DPU or download the latest • Make sure your motherboard has the latest BIOS • Try to reboot the server
The DPU no longer works	• Reseat the DPU in its slot or a different slot, if necessary • Try using another cable • Reinstall the drivers for the network driver files may be damaged or deleted • Reboot the server
DPUs stopped working after installing another DPU	• Try removing and re-installing all DPUs • Check that cables are connected properly • Make sure your motherboard has the latest BIOS
Link indicator light is off	• Try another port on the switch • Make sure the cable is securely attached • Check you are using the proper cables that do not exceed the recommended lengths • Verify that your switch and DPU port are compatible
Link light is on, but with no communication established	• Check that the latest driver is loaded • Check that both the DPU and its link are set to the same speed and duplex settings
Forgot password needed to install/upgrade the BlueField-2 DPU image	Refer to the latest version of BlueField DPU SW Manual and follow instructions under "Upgrading NVIDIA BlueField DPU Software" section.

Specifications

The BlueField-2 DPU is designed and validated for operation in data-center servers and other large environments that guarantee proper power supply and airflow conditions. The DPU is not intended for installation on a desktop or a workstation. Moreover, installing the DPU in any system without proper power and airflow levels can impact the DPU's functionality and potentially damage it. Failure to meet the environmental requirements listed in this user manual may void the warranty.

Power and airflow specifications are provided in *NVIDIA BlueField-2 DPUs Power and Airflow Specifications* document, which is available through the customer portal following login.

Ensure your system supports the following system hardware and power supply requirements before installing your DPU.

HHHL DPUs	75W or greater system power supply through the PCIe x16 interface
FHHL DPUs	**E-Series DPUs**: Minimum 75W or greater system power supply through the PCIe x16 interface
	P-Series DPUs: Minimum 75W or greater system power supply through the PCIe x16 interface, and an additional 75W through the supplementary 6-pin ATX power supply connector

MBF2M345A-HECOT / MBF2M345A-HESOT Specifications

BlueField-2 DPU	**BlueField-2 E-Series** - 8 Cores - 430MHz/2000MHz		
	• MBF2M345A-HECOT: Crypto Enabled, Secure Boot Enabled • MBF2M345A-HECOT: Crypto Disabled, Secure Boot Enabled		
Physical	**Card Dimensions (HHHL):** 2.71 in. x 6.6 in. (68.90mm x 167.65 mm) **Bracket Dimensions:** 4.73 in. x 0.85 in. (121.0mm x 21.6mm)		
	Connector: Single QSFP56 (copper and optical)		
Interfaces	See Interfaces of MBF2M345A-HECOT, MBF2M345A-HECOT		
	PCI Express 4.0: SERDES @ 16.0GT/s, 16 lanes (3.0, 2.0 and 1.1 compatible)		
Protocol Support	**Data Rate**	**Ethernet**	200/100/50/25/10/1 Gb/s
		InfiniBand	HDR/HDR100/EDR/FDR/QDR/DDR/SDR
	Ethernet: 200GBASE-CR4, 200GBASE-KR4, 200GBASE-SR4, 100GBASE-CR4, 100GBASE-KR4, 100GBASE-SR4, 50GBASE-R2, 50GBASE-R4, 40GBASE-CR4, 40GBASE-KR4, 40GBASE-SR4, 40GBASE-LR4, 40GBASE-ER4, 40GBASE-R2, 25GBASE-R, 20GBASE-KR2, 10GBASE-LR,10GBASE-ER, 10GBASE-CX4, 10GBASE-CR, 10GBASE-KR, SGMII, 1000BASE-CX, 1000BASE-KX, 10GBASE-SR, 100GBASE-CR2, 100GBASE-KR2, 100GBASE-SR2		
	InfiniBand: IBTA v1.3[a] **Auto-Negotiation**: HDR, HDR100 (2 lane x 50Gb/s per lane), EDR, FDR (14.0625Gb/s per lane), QDR (10Gb/s per lane), DDR (5Gb/s per lane), 1X/2X/4X SDR (2.5Gb/s per lane)		

Onboard Memory	• Single-channel with 8 DDR4 8 bit + ECC (64bit + 8bit ECC) **16GB** @ 3200MT/s • 64GB eMMC memory		
DPU Power Supply, Consumption and Airflow	**Voltage**: 12V		
	Maximum power available through QSFP56 port: 6W		
	Power and airflow specifications are provided in *NVIDIA BlueField-2 DPUs Power and Airflow Specifications* document, which is available through the customer portal following login.		
Environmental	**Temperature**	Operational	0°C to 45°C
		Non-operational	-40°C to 70°C
	Humidity	90% relative humidity[(a)]	
Regulatory	**Safety**	CB / cTUVus / CE	
	EMC	CE / FCC / VCCI / ICES / RCM	
	RoHS	RoHS compliant	

a. For both operational and non-operational states.

MBF2M516A-EECOT / MBF2M516A-EEEOT / MBF2M516A-EENOT Specifications

BlueField-2 DPU	**BlueField-2 E-Series** - 8 Cores - 430MHz/2000MHz		
	• MBF2M516A-EECOT: Crypto Enabled, Secure Boot Enabled • MBF2M516A-EEEOT: Crypto Enabled, Secure Boot Disabled • MBF2M516A-EENOT: Crypto Disabled, Secure Boot Disabled		
Physical	**Card Dimensions (FHHL):** 4.53 in. x 6.6 in. (115.15 mm x 167.65 mm) **Bracket Dimensions**: 4.76 in. x 0.72 in. (121.0 mm x 18.4 mm)		
	Connector: Dual QSFP56 (copper and optical)		
Interfaces	See Interfaces of MBF2H516A-EEEOT, MBF2H516A-EENOT and MBF2M516A-EECOT		
	PCI Express 4.0: SERDES @ 16.0GT/s, 16 lanes (3.0, 2.0 and 1.1 compatible)		
Protocol Support	**Data Rate**	**Ethernet**	100/50/25/10/1 Gb/s
		InfiniBand	HDR100/EDR/FDR/QDR/DDR/SDR
	Ethernet: 100GBASE-CR4, 100GBASE-KR4, 100GBASE-SR4, 50GBASE-R2, 50GBASE-R4, 40GBASE-CR4, 40GBASE-KR4, 40GBASE-SR4, 40GBASE-LR4, 40GBASE-ER4, 40GBASE-R2, 25GBASE-R, 20GBASE-KR2, 10GBASE-LR,10GBASE-ER, 10GBASE-CX4, 10GBASE-KX4, 10GBASE-CR, 10GBASE-KR, SGMII, 1000BASE-CX, 1000BASE-KX, 10GBASE-SR		
	InfiniBand: IBTA v1.3[a] **Auto-Negotiation**: HDR100 (2 lane x 50Gb/s per lane), FDR (14.0625Gb/s per lane), QDR (10Gb/s per lane), DDR (5Gb/s per lane), 1X/2X/4X SDR (2.5Gb/s per lane),		
On-board Memory	• Single-channel with 8 DDR4 8 bit + ECC (64bit + 8bit ECC) **16GB** @ 3200MT/s • 64GB eMMC memory		

DPU Power Supply, Consumption and Airflow	**Voltage**: 12V		
	Maximum power available through QSFP56 port: 2.5W (per port)		
	Power and airflow specifications are provided in *NVIDIA BlueField-2 DPUs Power and Airflow Specifications* document, which is available through the customer portal following login.		
Environmental	**Temperature**	Operational	0°C to 45°C
		Non-operational	-40°C to 70°C
	Humidity	90% relative humidity[(a)]	
Regulatory	**Safety**	CB / cTUVus / CE	
	EMC	CE / FCC / VCCI / ICES / RCM	
	RoHS	RoHS compliant	

a. For both operational and non-operational states.

MBF2H516A-EENOT / MBF2H516A-EEEOT Specifications

To power up these FHHL P-Series DPUs, you need to connect a PCIe external power cable to the onboard 6-pin ATX connector. The customer should supply the PCIe external power cable (usually available with the server). Refer to External Power Supply Connector for pin descriptions.

BlueField-2 DPU	**BlueField-2 P-Series** - 8 Cores - 550MHz/2750MHz		
	• MBF2H516A-EEEOT: Crypto Enabled, Secure Boot Disabled • MBF2H516A-EENOT: Crypto Disabled, Secure Boot Disabled		
Physical	**Card Dimensions (FHHL):** 4.53 in. x 6.6 in. (115.15 mm x 167.65 mm) **Bracket Dimensions**: 4.76 in. x 0.72 in. (121.0 mm x 18.4 mm)		
	Connector: Dual QSFP56 (copper and optical)		
Interfaces	See Interfaces of MBF2M516A-EEEOT and MBF2M516A-EENOT		
	PCI Express 4.0: SERDES @ 16.0GT/s, 16 lanes (3.0, 2.0 and 1.1 compatible)		
Protocol Support	**Data Rate**	**Ethernet**	100/50/25/10/1Gb/s
		InfiniBand	HDR100/EDR/FDR/QDR/DDR/SDR
	Ethernet: 100GBASE-CR4, 100GBASE-KR4, 100GBASE-SR4, 50GBASE-R2, 50GBASE-R4, 40GBASE-CR4, 40GBASE-KR4, 40GBASE-SR4, 40GBASE-LR4, 40GBASE-ER4, 40GBASE-R2, 25GBASE-R, 20GBASE-KR2, 10GBASE-LR,10GBASE-ER, 10GBASE-CX4, 10GBASE-KX4, 10GBASE-CR, 10GBASE-KR, SGMII, 1000BASE-CX, 1000BASE-KX, 10GBASE-SR		
	InfiniBand: IBTA v1.3[a] **Auto-Negotiation**: HDR100 (2 lane x 50Gb/s per lane), FDR (14.0625Gb/s per lane), QDR (10Gb/s per lane), DDR (5Gb/s per lane), 1X/2X/4X SDR (2.5Gb/s per lane)		
On-board Memory	16GB On-board DDR4, ECC 3200Mt/s		

DPU Power Supply, Consumption and Airflow	**Voltage**: 12V		
	Maximum power available through QSFP56 port: 2.5W (per port)		
	Power and airflow specifications are provided in *NVIDIA BlueField-2 DPUs Power and Airflow Specifications* document, which is available through the customer portal following login.		
Environmental	**Temperature**	Operational	0°C to 45°C
		Non-operational	-40°C to 70°C
	Humidity	90% relative humidity[a]	
Regulatory	**Safety**	CB / cTUVus / CE	
	EMC	CE / FCC / VCCI / ICES / RCM	
	RoHS	RoHS compliant	

a. For both operational and non-operational states.

MBF2M516C-EECOT / MBF2M516C-EESOT Specifications

BlueField-2 DPU	**BlueField-2 E-Series** - 8 Cores - 430MHz/2000MHz		
	• MBF2M516C-EECOT: Crypto Enabled, Secure Boot Enabled, with onboard BMC • MBF2M516C-EESOT: Crypto Disabled, Secure Boot Enabled, with onboard BMC		
Physical	**Card Dimensions (FHHL):** 4.53 in. x 6.6 in. (115.15 mm x 167.65 mm) **Bracket Dimensions**: 4.76 in. x 0.72 in. (121.0 mm x 18.4 mm)		
	Connector: Dual QSFP56 (copper and optical)		
Interfaces	See Interfaces of MBF2H516C-EECOT and MBF2H516C-EESOT		
	PCI Express 4.0: SERDES @ 16.0GT/s, 16 lanes (3.0, 2.0 and 1.1 compatible)		
Protocol Support	**Data Rate**	**Ethernet**	100/50/40/25/10/1 Gb/s
		InfiniBand	HDR100/EDR/FDE/QDR/DDR/SDR
	Ethernet: 100GBASE-CR4, 100GBASE-KR4, 100GBASE-SR4, 50GBASE-R2, 50GBASE-R4, 40GBASE-CR4, 40GBASE-KR4, 40GBASE-SR4, 40GBASE-LR4, 40GBASE-ER4, 40GBASE-R2, 25GBASE-R, 20GBASE-KR2, 10GBASE-LR,10GBASE-ER, 10GBASE-CX4, 10GBASE-KX4, 10GBASE-CR, 10GBASE-KR, SGMII, 1000BASE-CX, 1000BASE-KX, 10GBASE-SR		
	InfiniBand: IBTA v1.3[a] **Auto-Negotiation**: HDR100 (2 lane x 50Gb/s per lane), PAM4 256b/257b encoding and RS-FEC, FDR (14.0625Gb/s per lane), QDR (10Gb/s per lane), DDR (5Gb/s per lane), 1X/2X/4X SDR (2.5Gb/s per lane)		
On-board Memory	• Single-channel with 8 DDR4 8 bit + ECC (64bit + 8bit ECC) **16GB** @ 3200MT/s • 128GB eMMC memory (effectively 40GB with high durability)		
DPU Power Supply, Consumption and Airflow	**Voltage**: 12V		
	Maximum power available through QSFP56 port: 2.5W (per port)		
	Power and airflow specifications are provided in *NVIDIA BlueField-2 DPUs Power and Airflow Specifications* document, which is available through the customer portal following login.		
Environmental	**Temperature**	Operational	0°C to 45°C

		Non-operational	-40°C to 70°C
	Humidity	90% relative humidity[(a)]	
Regulatory	**Safety**	CB / cTUVus / CE	
	EMC	CE / FCC / VCCI / ICES / RCM	
	RoHS	RoHS compliant	

a. For both operational and non-operational states.

MBF2H516C-EECOT/ MBF2H516C-EESOT Specifications

> To power up these FHHL P-Series DPUs with x16 PCIe Gen 4 lanes, you need to connect a PCIe external power cable to the onboard 6-pin ATX connector. The customer should supply the PCIe external power cable (usually available with the server). Refer to External Power Supply Connector for pin descriptions.

BlueField-2 DPU	**BlueField-2 P-Series** - 8 Cores - 550MHz/2750MHz		
	• MBF2H516C-EECOT: Crypto Enabled, Secure Boot Enabled, with onboard BMC • MBF2H516C-EESOT: Crypto Disabled, Secure Boot Enabled, with onboard BMC		
Physical	**Card Dimensions (FHHL):** 4.53 in. x 6.6 in. (115.15 mm x 167.65 mm) **Bracket Dimensions**: 4.76 in. x 0.72 in. (121.0 mm x 18.4 mm)		
	Connector: Dual QSFP56 (copper and optical)		
Interfaces	See Interfaces of MBF2M516C-EECOT and MBF2M516C-EESOT		
	PCI Express 4.0: SERDES @ 16.0GT/s, 16 lanes (3.0, 2.0 and 1.1 compatible)		
Protocol Support	**Data Rate**	**Ethernet**	100/50/40/25/10/1 Gb/s
		InfiniBand	HDR100/EDR/FDR/QDR/DDR/SDR
	Ethernet: 100GBASE-CR4, 100GBASE-KR4, 100GBASE-SR4, 50GBASE-R2, 50GBASE-R4, 40GBASE-CR4, 40GBASE-KR4, 40GBASE-SR4, 40GBASE-LR4, 40GBASE-ER4, 40GBASE-R2, 25GBASE-R, 20GBASE-KR2, 10GBASE-LR,10GBASE-ER, 10GBASE-CX4, 10GBASE-KX4, 10GBASE-CR, 10GBASE-KR, SGMII, 1000BASE-CX, 1000BASE-KX, 10GBASE-SR		
	InfiniBand: IBTA v1.3[a] **Auto-Negotiation**: HDR100 (2 lane x 50Gb/s per lane), PAM4 256b/257b encoding and RS-FEC, FDR (14.0625Gb/s per lane), QDR (10Gb/s per lane), DDR (5Gb/s per lane), 1X/2X/4X SDR (2.5Gb/s per lane)		
On-board Memory	• Single-channel with 8 DDR4 8 bit + ECC (64bit + 8bit ECC) **16GB** @ 3200MT/s • 128GB eMMC memory (effectively 40GB with high durability)		
DPU Power Supply, Consumption and Airflow	**Voltage**: 12V		
	Maximum power available through QSFP56 port: 2.5W (per port)		
	Power and airflow specifications are provided in *NVIDIA BlueField-2 DPUs Power and Airflow Specifications* document, which is available through the customer portal following login.		
Environmental	**Temperature**	Operational	0°C to 45°C

		Non-operational	-40°C to 70°C
	Humidity	90% relative humidity[a]	
Regulatory	**Safety**	CB / cTUVus / CE	
	EMC	CE / FCC / VCCI / ICES / RCM	
	RoHS	RoHS compliant	

a. For both operational and non-operational states.

DPU Mechanical Drawing and Dimensions

⚠ All dimensions are in millimeters. The PCB mechanical tolerance is +/- 0.13mm.
The diagrams may differ for different cards and are only provided here for illustration purposes.

HHHL DPUs	FHHL DPUs
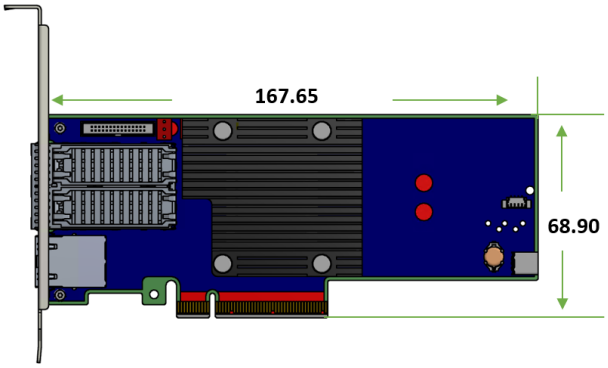	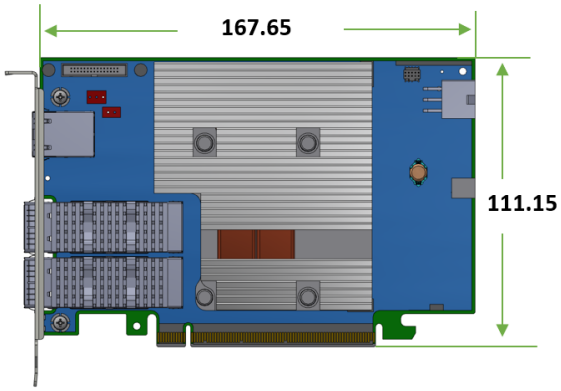

Bracket Mechanical Drawing

⚠ **Note**

All dimensions are in millimeters.

Group #	Bracket	
MBF2M345A-HECOT MBF2M345A-HESOT	Tall bracket: 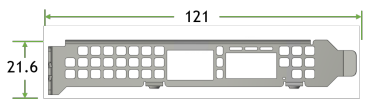	Short bracket: 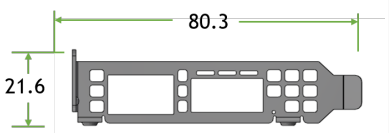

Group #	Bracket
MBF2H516A-EEEOT MBF2H516A-EENOT MBF2M516A-EECOT MBF2M516A-EEEOT MBF2M516A-EENOT	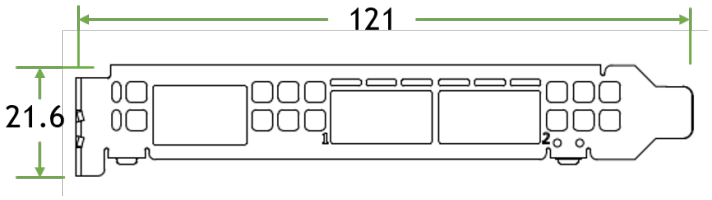
MBF2H516C-EECOT MBF2H516C-EESOT MBF2M516C-EECOT MBF2M516C-EESOT	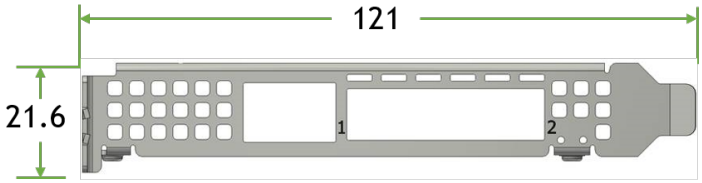

Finding the GUID/MAC on the DPU

Each NVIDIA adapter card has a different identifier printed on the label: serial number and the card MAC for the Ethernet protocol and the card GUID for the InfiniBand protocol. VPI cards have both a GUID and a MAC (derived from the GUID).

⚠ The product revisions indicated on the labels in the following figures do not necessarily represent the latest revisions of the cards.

⚠ The DPU labels contain four MAC addresses (Host, OOB, ECPF and MPF).

- Host (Base MAC)
- OOB: Out-of-Band Management (Management Port)
- ECPF: Embedded CPU Function (the embedded Arm system controls the NIC resources and datapath)
- MPF: Multi/Management Physical Function

The barcode supports all of the available MAC addresses.

⚠ The HOST MAC in the below board label is the product's base MAC.
In dual-port cards, the HOST MAC belongs to the first port, and the HOST MAC of the second port increases by 1 (in HEX).
For example:
The HOST MAC address of the second port is HOST: 00 02 C9 27 05 01.

⚠ The allocation of MAC addresses to the embedded CPU are derived from a few configuration factors which set some variables.
The gap between the MAC addresses is a set by constant numbers in HEX.
The OOB, ECPF, and MPF MAC addresses depend on the BASE MAC address.

DPU Board Label (Example)



Supported Servers and Power Cords

Supported Servers

Server support depends on the particular setup being used. The following is a partial list of servers with which the DPUs have been tested. For more information, please contact your NVIDIA representative.

Vendor Name	Server Model
Dell EMC	PowerEdge R650
Dell EMC	PowerEdge R750
Sugon	A620-G40
Inspur	NF5280M5
Inspur	SA5212M5
Inspur	NF5280R6
Inspur	SA5280R6
Lenovo	SR630 V2
Lenovo	SR655 (AMD)
Lenovo	SR635 (AMD)
Super Micro	AS-2114GT-DRN
Super Micro	AS-2114GT-DNR
Super Micro	SYS-120U-TNR
Super Micro	SYS-220U-TNR
H3C	R4900 G3
H3C	R4900 G5
H3C	R4950 G5
H3C	R5500 G5
Nettrix	R620 G30
xFusion	1288H V5/V6
xFusion	2288H V5/V6
xFusion	5288H V5/V6

Supported Power Cords

Vendor Name	Part Number	Description
CISCO	72-102163-01	Cisco-UCSC M6/7 1U Power Cable for NVIDIA BlueField-2 DPU
	72-102164-01	Cisco-UCSC M6/7 2U Power Cable for NVIDIA BlueField-2 DPU

Vendor Name	Part Number	Description
HP	755742-001	HP GPU Power Cable for hp dl380 gen9
	805123-001	HP GPU Power Cable for hp dl380 gen9
	687955-001	HP GPU Power Cable for hp dl380 gen9
Dell	TR5TP	Dell R740R740xd GPU Riser to GPU Power Cable
	J30DG	Dell R720 R720XD GPU Power Cable

Pin Description

PCI Express Interface

The below tables lists the PCI Express pins description. For further details, please refer to PCI Express Interface.

Pin #	Signal Name	Description	Pin #	Signal Name	Description
A1	PRSNT1#	Mechanical Present	B1	12V	
A2	12V		B2	12V	
A3	12V		B3	12V	
A4	GND		B4	GND	
A5	TCK	JTAG - Not Connected	B5	SMCLK	Host SMBus
A6	TDI	JTAG - Not Connected	B6	SMDAT	Host SMBus
A7	TDO	JTAG - Not Connected	B7	GND	
A8	TMS	JTAG - Not Connected	B8	3.3V	3.3V - Not Connected
A9	3.3V	3.3V - Not Connected	B9	TRST#	JTAG - Not Connected
A10	3.3V	3.3V - Not Connected	B10	3.3V_AUX	
A11	PERST#	PCIe Reset	B11	WAKW#/RSVD	
A12	GND		B12	RSVD	
A13	REFCLK+	Host Reference Clock	B13	GND	
A14	REFCLK-	Host Reference Clock	B14	PETP0	
A15	GND		B15	PETN0	
A16	PERP0		B16	GND	
A17	PERN0		B17	RSVD	
A18	GND		B18	GND	
A19	RSVD		B19	PETP1	
A20	GND		B20	PETN1	
A21	PERP1		B21	GND	
A22	PERN1		B22	GND	
A23	GND		B23	PETP2	
A24	GND		B24	PETN2	
A25	PERP2		B25	GND	
A26	PERN2		B26	GND	
A27	GND		B27	PETP3	
A28	GND		B28	PETN3	
A29	PERP3		B29	GND	
A30	PERN3		B30	RSVD	
A31	GND		B31	RSVD	

Pin #	Signal Name	Description	Pin #	Signal Name	Description
A32	RSVD		B32	GND	
A33	RSVD		B33	PETP4	
A34	GND		B34	PETN4	
A35	PERP4		B35	GND	
A36	PERN4		B36	GND	
A37	GND		B37	PETP5	
A38	GND		B38	PETN5	
A39	PERP5		B39	GND	
A40	PERN5		B40	GND	
A41	GND		B41	PETP6	
A42	GND		B42	PETN6	
A43	PERP6		B43	GND	
A44	PERN6		B44	GND	
A45	GND		B45	PETP7	
A46	GND		B46	PETN7	
A47	PERP7		B47	GND	
A48	PERN7		B48	RSVD	
A49	GND		B49	GND	
A50	RSVD		B50	PETP8	
A51	GND		B51	PETN8	
A52	PERP8		B52	GND	
A53	PERN8		B53	GND	
A54	GND		B54	PETP9	
A55	GND		B55	PETN9	
A56	PERP9		B56	GND	
A57	PERN9		B57	GND	
A58	GND		B58	PETP10	
A59	GND		B59	PETN10	
A60	PERP10		B60	GND	
A61	PERN10		B61	GND	
A62	GND		B62	PETP11	
A63	GND		B63	PETN11	
A64	PERP11		B64	GND	
A65	PERN11		B65	GND	
A66	GND		B66	PETP12	
A67	GND		B67	PETN12	
A68	PERP12		B68	GND	

Pin #	Signal Name	Description	Pin #	Signal Name	Description
A69	PERN12		B69	GND	
A70	GND		B70	PETP13	
A71	GND		B71	PETN13	
A72	PERP13		B72	GND	
A73	PERN13		B73	GND	
A74	GND		B74	PETP14	
A75	GND		B75	PETN14	
A76	PERP14		B76	GND	
A77	PERN14		B77	GND	
A78	GND		B78	PETP15	
A79	GND		B79	PETN15	
A80	PERP15		B80	GND	
A81	PERN15		B81	GND	
A82	GND		B82	PRSNT2#	Mechanical Present

External Power Supply Connector

The below table provides the External Power Supply pins of the external power supply interfaces on the DPU. For further details, please refer to External PCIe Power Supply Connector.

> The mechanical pinout of the 6-pin external +12V power connector is shown below. The +12V connector is a GPU power PCIe standard connector. Care should be taken to ensure the power is applied to the correct pins as some 6-pin ATX-type connectors can have different pinouts.

Pin#	Signal Name	Description
1	12V	ATX Supplied 12V
2	12V	ATX Supplied 12V
3	12V	ATX Supplied 12V
4	GND	Power Return
5	Not connected	Unused
6	GND	Power Return

NC-SI Management Interface

The below tables list the NC-SI management interface pinout descriptions per card type. Please follow the link to the table coinciding with the OPN you have purchased.

		Link to NC-SI connector mapping
Group 1	MBF2H516C-EECOT	Table A - NC-SI Connector Pins
	MBF2H516C-EESOT	
	MBF2M516C-EECOT	
	MBF2M516C-EESOT	
Group 2	MBF2M345A-HECOT	Table B - NC-SI Connector Pins
	MBF2M345A-HESOT	
Group 3	MBF2M516A-EECOT	Table C - NC-SI Connector Pins
	MBF2M516A-EEEOT	
	MBF2M516A-EENOT	
	MBF2H516A-EECOT	
	MBF2H516A-EEEOT	
	MBF2H516A-EENOT	

Table A - NC-SI Connector Pins

⚠ This table applies to the following OPNs, from HW version B200 and up: MBF2H532C-AECOT, MBF2H532C-AESOT, MBF2H536C-CECOT and MBF2H536C-CESOT.
In Engineering samples of the card, an NC-SI 30-pin connector is populated. Please refer to Engineering Samples pinouts for the 30-pin connector pinouts.

PACK_ID[2:0] signals allow for 8 unique card IDs. The system configurator sets the unique value per card via the connecting harness.

Pin#	Pin Name	IO	Description/Comments
1	GND	Input	Ground
2	PACK_ID1, connected to BlueField-2 NIC_GPIO[47]	Input	See the description above table regarding PACK_ID Should be connected to the Primary controller NC-SI PACK_ID pins to set the appropriate package ID. PACK_ID0 should be connected to the endpoint device GPIO associated with Package ID[0]. PACK_ID1 should be associated with Package ID0. The baseboard should connect to GND or leave floating. DPU should have a 4.7k PU.

Pin#	Pin Name	IO	Description/Comments
3	RBT_RXD0	Output	Receive data Out 0. Data signals from the network controller to the BMC. For baseboards, this pin should be connected between the baseboard NC-SI over RBT PHY and the connector. This signal requires a 100 kΩ pull-down resistor to GND on the baseboard between the BMC and the RBT isolator to prevent the signal from floating when no card is installed. For DPUs, this pin should be connected between the connector and the RBT PHY. External termination is determined by the DPU RBT PHY requirements.
4	RBT_REF_CLK	Input	RBT Reference clock. Synchronous clock reference for receive, transmit, and control interface. The clock should have a typical frequency of 50MHz ±50 ppm. For baseboards, this pin should be connected between the baseboard NC-SI over RBT PHY and the DPU cable connector. The RBT_REF_CLK should not be driven until 3.3V AUX is present on the DPU. The RBT_REF_CLK should be continuous once it has started. For DPUs, this pin should be connected between the connector and the RBT PHY. No external termination is required. 50MHz REF CLK for NC-SI BUS
5	RBT_RXD1	Output	Receive Data Out 1. Data signals from the network controller to the BMC. For baseboards, this pin should be connected between the baseboard NC-SI over RBT PHY and the connector. This signal requires a 100 kΩ pull-down resistor to GND on the baseboard between the BMC and the RBT isolator to prevent the signal from floating when no card is installed. For DPUs, this pin should be connected between the connector and the RBT PHY. External termination is determined by the DPU RBT PHY requirements.
6	GND	Input	Ground
7	RBT_CRS_DV	Input	Carrier sense/receive data valid. This signal is used to indicate to the baseboard that the carrier sense/receive data is valid. For baseboards, this pin should be connected between the baseboard NC-SI over RBT PHY and the connector. This signal requires a 100 kΩ pull-down resistor on the baseboard between the BMC and the RBT isolator to prevent the signal from floating when no DPU is installed. For DPUs, this pin should be connected between the connector and the RBT PHY. External termination is determined by the DPU RBT PHY requirements.

Pin#	Pin Name	IO	Description/Comments
8	RBT_ISOLATE_N	Input	Signal used to indicate the SmartNIC has powered and is ready for NC-SI physical layer connection to be present. When low the baseboard circuitry will isolate the NC-SI connection to the SmartNIC. When high normal NC-SI RBT connectivity is available. Baseboards should terminate this with a 47K-100K PD resistor. SmartNICs should terminate with a 10k PU resistor.
9	GND	Input	Ground
10	PACK_ID0, connected to BlueField-2 NIC_GPIO[49]	GND	See note above table regarding NC-SI PACK_ID should be connected to the Primary controller NC-SI PACK_ID pins to set the appropriate package ID. PACK_ID0 should be connected to the endpoint device GPIO associated with Package ID[0]. PACK_ID1 should be associated with PACK_ID[1]. The baseboard should connect to GND or leave floating. DPU should have a 4.7k PU.
11	NCSI_TX_EN	Input	Transmit enable. For baseboards, this pin should be connected between the baseboard NC-SI over RBT PHY and the connector. This signal requires a 100 kΩ pull-down resistor to ground on the baseboard between the RBT isolator and the DPU cable connector to prevent the card-side signals from floating when the RBT signals are isolated. For DPUs, this pin should be connected between the connector and the RBT PHY. External termination is determined by the DPU RBT PHY requirements.
12	GND	GND	Ground
13	NCSI_TX_D0	Input	Transmit Data In 0. Data signals from the BMC to the network controller. For baseboards, this pin should be connected between the baseboard NC-SI over RBT PHY and the connector. This signal requires a 100 kΩ pull down resistor to GND on the baseboard between the RBT isolator and the DPUcable connector to prevent the card-side signals from floating when the RBT signals are isolated. For DPUs, this pin should be connected between the connector and the RBT PHY. External termination is determined by the DPU RBT PHY requirements.
14	BMC_RX5	Input	UART transmit serial data input. 3.3V UART TX signal from the baseboard Ground

Pin#	Pin Name	IO	Description/Comments
15	NCSI_TX_D1	Input	Transmit Data In 0. Data signals from the BMC to the network controller. For baseboards, this pin should be connected between the baseboard NC-SI over RBT PHY and the connector. This signal requires a 100 kΩ pull-down resistor to GND on the baseboard between the RBT isolator and the DPUcable connector to prevent the card-side signals from floating when the RBT signals are isolated. For DPUs, this pin should be connected between the connector and the RBT PHY. External termination is determined by the DPU RBT PHY requirements.
16	BMC_TX5	Output	UART transmit serial data output. 3.3V UART TX signal to the baseboard.
17	PRESENCE_N		Presence of SmartNIC The baseboard should implement a 200 Ω series resistor and 4.7kohm pull-up resistor to 3.3V AUX. SmartNIC should tie this to GND.
18	GND	GND	Ground
19	NCSI_ARB_IN	Input	NC-SI hardware arbitration input If the baseboard supports multiple DPU cards connected to the same RBT interface, it should implement logic that connects the RBT_ARB_IN pin of the first populated DPU card to its RBT_ARB_OUT pin if it is the only card present or to the RBT_ARB_OUT pin of the next populated card and so on sequentially for all cards on the specified RBT bus to ensure the arbitration ring is complete. This logic should bypass slots that are not populated or powered off.
20	NCSI_ARB_OUT	Output	NC-SI hardware arbitration output. If the baseboard supports multiple DPU cards connected to the same RBT interface, it should implement logic that connects the RBT_ARB_OUT pin of the first populated DPU card to its RBT_ARB_IN pin if it is the only card present or to the RBT_ARB_IN pin of the next populated card and so on sequentially for all cards on the specified RBT bus to ensure the arbitration ring is complete. This logic should bypass slots that are not populated or powered off.

Table B - NC-SI Connector Pins

⚠ The below table applies to all HW versions of MBF2M345A-HECOT and MBF2M345A-HESOT.

PACK_ID[2:0] signals allow for 8 unique card IDs. The system configurator sets the unique value per card via the connecting harness.

Pin #	Pin Name	I/O	Description / Comments
1	NCSI_REF_CLK	Input	RBT Reference clock. Synchronous clock reference for receive, transmit and control interface. The clock shall have a typical frequency of 50MHz ±50 ppm. For baseboards, this pin shall be connected between the baseboard NC-SI over RBT PHY and the DPU cable connector. The RBT_REF_CLK shall not be driven until 3.3V AUX is present on the DPU. The RBT_REF_CLK shall be continuous once it has started. For DPUs, this pin shall be connected between the connector and the RBT PHY. No external termination is required. 50MHz REF CLK for NC-SI BUS
2	GND	GND	Ground
3	NCSI_ARB_IN	Input	If the baseboard supports multiple DPU cards connected to the same RBT interface, it shall implement logic that connects the RBT_ARB_IN pin of the first populated DPU card to its RBT_ARB_OUT pin if it is the only card present or to the RBT_ARB_OUT pin of the next populated card and so on sequentially for all cards on the specified RBT bus to ensure the arbitration ring is complete. This logic shall bypass slots that are not populated or powered off. NC-SI hardware arbitration input
4	PACK_ID0, connected to BlueField-2 NIC_GPIO[49]	Input	See description above table. NC-SI PKG_ID Shall be connected to the Primary controller NC-SI PKG_ID pins to set the appropriate package ID. PKG_ID0 shall be connected to the endpoint device GPIO associated with Package ID[0]. PKG_ID1 shall be associated with Package ID[1]. Baseboard shall connect to GND or leave floating. DPU shall have a 4.7k PU.
5	NCSI_ARB_OUT	Output	NC-SI hardware arbitration output. If the baseboard supports multiple DPU cards connected to the same RBT interface, it shall implement logic that connects the RBT_ARB_OUT pin of the first populated DPU card to its RBT_ARB_IN pin if it is the only card present or to the RBT_ARB_IN pin of the next populated card and so on sequentially for all cards on the specified RBT bus to ensure the arbitration ring is complete. This logic shall bypass slots that are not populated or powered off.

Pin #	Pin Name	I/O	Description / Comments
6	PACK_ID1, connected to BlueField-2 NIC_GPIO[47]	Input	See description above table. NC-SI PKG_ID Shall be connected to the Primary controller NC-SI PKG_ID pins to set the appropriate package ID. PKG_ID0 shall be connected to the endpoint device GPIO associated with Package ID[0]. PKG_ID1 shall be associated with Package ID[1]. Baseboard shall connect to GND or leave floating. DPU shall have a 4.7k PU.
7	NCSI_RX_D0	Output	Receive data Out 0. Data signals from the network controller to the BMC. For baseboards, this pin shall be connected between the baseboard NC-SI over RBT PHY and the connector. This signal requires a 100 kΩ pull down resistor to GND on the baseboard between the BMC and the RBT isolator to prevent the signal from floating when no card is installed. For DPUs, this pin shall be connected between the connector and the RBT PHY. External termination determined by the DPU RBT PHY requirements.
8	GND	GND	Ground
9	NCSI_RX_D1	Output	Receive Data Out 1. Data signals from the network controller to the BMC. For baseboards, this pin shall be connected between the baseboard NC-SI over RBT PHY and the connector. This signal requires a 100 kΩ pull down resistor to GND on the baseboard between the BMC and the RBT isolator to prevent the signal from floating when no card is installed. For DPUs, this pin shall be connected between the connector and the RBT PHY. External termination determined by the DPU RBT PHY requirements.
10	GND	GND	Ground
11	NCSI_CRS_DV	Output	Carrier sense/receive data valid. This signal is used to indicate to the baseboard that the carrier sense/receive data is valid. For baseboards, this pin shall be connected between the baseboard NC-SI over RBT PHY and the connector. This signal requires a 100 kΩ pull down resistor on the baseboard between the BMC and the RBT isolator to prevent the signal from floating when no DPU is installed. For DPUs, this pin shall be connected between the connector and the RBT PHY. External termination determined by the DPU RBT PHY requirements.
12	GND	GND	Ground

Pin #	Pin Name	I/O	Description / Comments
13	NCSI_TX_D0	Input	Transmit Data In 0. Data signals from the BMC to the network controller. For baseboards, this pin shall be connected between the baseboard NC-SI over RBT PHY and the connector. This signal requires a 100 kΩ pull down resistor to GND on the baseboard between the RBT isolator and the DPUcable connector to prevent the card-side signals from floating when the RBT signals are isolated. For DPUs, this pin shall be connected between the connector and the RBT PHY. External termination determined by the DPU RBT PHY requirements.
14	GND	GND	Ground
15	NCSI_TX_D1	Input	Transmit Data In 0. Data signals from the BMC to the network controller. For baseboards, this pin shall be connected between the baseboard NC-SI over RBT PHY and the connector. This signal requires a 100 kΩ pull down resistor to GND on the baseboard between the RBT isolator and the DPUcable connector to prevent the card-side signals from floating when the RBT signals are isolated. For DPUs, this pin shall be connected between the connector and the RBT PHY. External termination determined by the DPU RBT PHY requirements.
16	GND	GND	Ground
17	NCSI_TX_EN	Input	Transmit enable. For baseboards, this pin shall be connected between the baseboard NC-SI over RBT PHY and the connector. This signal requires a 100 kΩ pull down resistor to ground on the baseboard between the RBT isolator and the DPU cable connector to prevent the card-side signals from floating when the RBT signals are isolated. For DPUs, this pin shall be connected between the connector and the RBT PHY. External termination determined by the DPU RBT PHY requirements.
18	GND	GND	Ground
19	Reserved		
20	SOFT_RST#, connected to BlueField-2 device pin HOST_GPIO[7]	Input	This signal enables graceful reset of the Arm Array from an external entity
21	ARM_I2C1_SDA	Input/Output	Open-drain signal

Pin #	Pin Name	I/O	Description / Comments
22	ARM_NSRST#	Output	Open-drain signal This signal enables hard reset of the Arm Array from an external entity
23	ARM_I2C1_SCL	Input/Output	Open-drain signal
24	PACK_ID2, connected to BlueField-2 device pin NIC_GPIO[46]	Input	See description above table. NC-SI PKG_ID Shall be connected to the Primary controller NC-SI PKG_ID pins to set the appropriate package ID. PKG_ID0 shall be connected to the endpoint device GPIO associated with Package ID[0]. PKG_ID1 shall be associated with Package ID[1]. Baseboard shall connect to GND or leave floating. DPU shall have a 4.7k PU.
25	GND	GND	Ground
26	Not Connected		
27	Not Connected		
28	BF_UART0_TX	Output	UART transmit serial data output. 3.3V UART TX signal from the baseboard.
29	Not Connected		
30	BF_UART0_RX	Input	UART transmit serial data input. 3.3V UART RX signal to the baseboard.

Table C - NC-SI Connector Pins

⚠ The below table applies to all HW versions of MBF2M516A-EECOT, MBF2M516A-EEEOT, MBF2M516A-EENOT, MBF2H516A-EEEOT and MBF2H516A-EENOT.

PACK_ID[2:0] signals allow for 8 unique card IDs. The system configurator sets the unique value per card via the connecting harness.

Pin#	Signal Name	I/O	Description	Comments
1	REF_CLK	Input	50M REF CLK for NCSI BUS	RBT Reference clock. Synchronous clock reference for receive, transmit and control interface. The clock shall have a typical frequency of 50MHz ±50 ppm. For baseboards, this pin shall be connected between the baseboard NC-SI over RBT PHY and the DPU cable connector. The RBT_REF_CLK shall not be driven until 3.3V AUX is present on the DPU. The RBT_REF_CLK shall be continuous once it has started. For DPUs, this pin shall be connected between the connector and the RBT PHY. No external termination is required.

Pin#	Signal Name	I/O	Description	Comments
2	GND	GND	Ground	
3	ARB_IN	Input	NCSI hardware arbitration input	NC-SI hardware arbitration input If the baseboard supports multiple DPU cards connected to the same RBT interface, it shall implement logic that connects the RBT_ARB_IN pin of the first populated DPU card to its RBT_ARB_OUT pin if it is the only card present or to the RBT_ARB_OUT pin of the next populated card and so on sequentially for all cards on the specified RBT bus to ensure the arbitration ring is complete. This logic shall bypass slots that are not populated or powered off.
4	GND	GND	Ground	
5	ARB_OUT	Output	NCSI hardware arbitration output	NC-SI hardware arbitration output. If the baseboard supports multiple DPU cards connected to the same RBT interface, it shall implement logic that connects the RBT_ARB_OUT pin of the first populated DPU card to its RBT_ARB_IN pin if it is the only card present or to the RBT_ARB_IN pin of the next populated card and so on sequentially for all cards on the specified RBT bus to ensure the arbitration ring is complete. This logic shall bypass slots that are not populated or powered off.
6	GND	GND	Ground	
7	RX_D0	Output	Receive data	Output for SoC Receive data. Data signals from the network controller to the BMC. For baseboards, this pin shall be connected between the baseboard NC-SI over RBT PHY and the connector. This signal requires a 100 kΩ pull down resistor to GND on the baseboard between the BMC and the RBT isolator to prevent the signal from floating when no card is installed. For DPUs, this pin shall be connected between the connector and the RBT PHY. External termination determined by the DPU RBT PHY requirements.
8	GND	GND	Ground	

Pin#	Signal Name	I/O	Description	Comments
9	RX_D1	Output	Receive data	Output for SoC Receive data. Data signals from the network controller to the BMC. For baseboards, this pin shall be connected between the baseboard NC-SI over RBT PHY and the connector. This signal requires a 100 kΩ pull down resistor to GND on the baseboard between the BMC and the RBT isolator to prevent the signal from floating when no card is installed. For DPUs, this pin shall be connected between the connector and the RBT PHY. External termination determined by the DPU RBT PHY requirements.
10	GND	GND	Ground	
11	CRS_DV	Output	Carrier sense/Receive Data Valid	Carrier sense/receive data valid. This signal is used to indicate to the baseboard that the carrier sense/receive data is valid. For baseboards, this pin shall be connected between the baseboard NC-SI over RBT PHY and the connector. This signal requires a 100 kΩ pull down resistor on the baseboard between the BMC and the RBT isolator to prevent the signal from floating when no DPU is installed. For DPUs, this pin shall be connected between the connector and the RBT PHY. External termination determined by the DPU RBT PHY requirements.
12	GND	GND	Ground	
13	TX_D0	Input	Transmit data	Input for SoC. Data signals from the BMC to the network controller. For baseboards, this pin shall be connected between the baseboard NC-SI over RBT PHY and the connector. This signal requires a 100 kΩ pull down resistor to GND on the baseboard between the RBT isolator and the DPUcable connector to prevent the card-side signals from floating when the RBT signals are isolated. For DPUs, this pin shall be connected between the connector and the RBT PHY. External termination determined by the DPU RBT PHY requirements.
14	GND	GND	Ground	

Pin#	Signal Name	I/O	Description	Comments
15	TX_D1	Input	Transmit data	Input for SoC. Data signals from the BMC to the network controller. For baseboards, this pin shall be connected between the baseboard NC-SI over RBT PHY and the connector. This signal requires a 100 kΩ pull down resistor to GND on the baseboard between the RBT isolator and the DPUcable connector to prevent the card-side signals from floating when the RBT signals are isolated. For DPUs, this pin shall be connected between the connector and the RBT PHY. External termination determined by the DPU RBT PHY requirements.
16	GND	GND	Ground	
17	TX_EN	Input	Transmit enable	Transmit enable. For baseboards, this pin shall be connected between the baseboard NC-SI over RBT PHY and the connector. This signal requires a 100 kΩ pull down resistor to ground on the baseboard between the RBT isolator and the DPU cable connector to prevent the card-side signals from floating when the RBT signals are isolated. For DPUs, this pin shall be connected between the connector and the RBT PHY. External termination determined by the DPU RBT PHY requirements.
18	GND	GND	Ground	
19	NC			
20	NC			
21	I2C_SDA	Bidirectional	I2C Serial Data	GW_ARM1
22	GND	GND	Ground	
23	I2C_SCL	Bidirectional	I2C Serial Clock	GW_ARM1
24	GND	GND	Ground	
25	GND	GND	Ground	
26	GND	GND	Ground	
27	NC			
28	UART_TX	Output	Transmit data	Output for SoC. 3.3V UART TX signal from the baseboard.
29	NC			
30	UART_RX	Input	Receive data	3.3V UART RX signal to the baseboard.

Engineering Samples Pinouts

30-pin NC-SI Connector

⚠ The below table applies to the engineering samples of the following OPNs: MBF2H516C-EECOT, MBF2H516C-EESOT, MBF2M516C-EECOT and MBF2M516C-EESOT.

Pin #	Pinout	I/O	Description / Comments
1	NCSI_REF_CLK	Input	50MHz REF CLK for NC-SI BUS
2	GND	GND	Ground
3	NCSI_ARB_IN	Input	NC-SI hardware arbitration input
4	PACK_ID0, connected to BlueField-2 device pin NIC_GPIO[49]	Input	See the note above table
5	NCSI_ARB_OUT	Output	NC-SI hardware arbitration output
6	PACK_ID1, connected to BlueField-2 device pin NIC_GPIO[47]	Input	See the note above table
7	NCSI_RX_D0	Output	Receive Data Out 0
8	GND	GND	Ground
9	NCSI_RX_D1	Output	Receive Data Out 1
10	GND	GND	Ground
11	NCSI_CRS_DV	Output	Carrier Sense / Receive Data Valid
12	GND	GND	Ground
13	NCSI_TX_D0	Input	Transmit Data In 0
14	GND	GND	Ground
15	NCSI_TX_D1	Input	Transmit Data In 0
16	GND	GND	Ground
17	NCSI_TX_EN	Input	Transmit Enable
18	GND	GND	Ground
19	Reserved		
20	Reserved		
21	BMC_I2C2_SDA	Input/Output	Open-drain signal
22	NIC_BMC_CTRL1, connected to BMC device pin W4 (Open Drain)	Input/Output	Open-drain signal
23	BMC_I2C2_SCL	Input/Output	Open-drain signal
24	PACK_ID2, connected to BlueField-2 device pin NIC_GPIO[46]	Input	See description above table

Pin #	Pinout	I/O	Description / Comments
25	GND	GND	Ground
26	NIC_BMC_CTRL0, connected to BMC device pin Y3 (Open Drain)		
27	Not Connected		
28	BMC_TX5	Output	UART transmit serial data output
29	Not Connected		
30	BMC_RX5	Input	UART transmit serial data input

Document Revision History

Date	Description
Nov. 2022	Updated Driver Installation and Update
Oct. 2022	Added a warning to the following sections: • System Requirements • Hardware Requirements • Specifications
Sep. 2022	Updated the following sections: • Driver Installation and Update • Specifications
Jul. 2022	Updated the following sections: • Introduction • Supported Interfaces • Pin Description • Specifications
Jun. 2022	Updated HHHL mechanical drawing.
Mar. 2022	Updated networking ports LED specifications.
Feb. 2022	Updated the Supported Servers and Power Cords with Cisco power cords.
Jan. 2022	• Added Maximum trace length values. • Added PPS IN/OUT support to MBF2M516C-EESOT and MBF2M516C-EECOT.
Dec. 2021	Updated the NCSI interface pinouts
Oct. 2021	Added Custom UART Cable Installation instructions.
Sep. 2021	Updated System Requirements section.

Jun. 2021	• In Supported Interfaces sections:
	  • Updated mechanical drawing and USB section description
	  • Added note that port cages of some cards operate in SFP28/QSFP28 mode by default

May 2021	• Added HHHL 200GbE/HDR OPNs: MBF2M345A-HECOT, MBF2M345A-HESOT • Added FHHL 100GbE/EDR/HDR100 OPNs with Secure Boot enabled: MBF2M516A-EECOT, MBF2M516H-EECOT, • Added FHHL 100GbE/EDR OPNs with on-board BMC: MBF2M516C-EECOT, MBF2M516C-EESOT, MBF2H516C-EECOT, MBF2H516C-EESOT • Updated: Supported Interfaces, Pin Description, Troubleshooting, and Specifications pages • Added 1GbE OOB Management LEDs definition • Added DOC SDK pointer to Related Documentation on title page
Mar. 2021	• Minor update in Ordering Part Numbers on title page • Added in Supported Interfaces a note that the External PCIe Power Supply Connector is present on FHHL P-Series DPUs only, and that it is not present on FHHL E-Series DPUs • Replaced the mechanical drawing of the FHHL bracket in Specifications
Feb. 2021	Updated eMMC size to 64GB

Date	Description
Dec. 2020	• Updated the NCSI interface pinouts • Removed the UART interface from "Supported Interfaces" • Updated "Package Contents"
Dec. 2020	• Updated the NCSI interface pinouts • Added "Supported Servers and Power Cords" chapter
Oct. 2020	First release

Notice

This document is provided for information purposes only and shall not be regarded as a warranty of a certain functionality, condition, or quality of a product. Neither NVIDIA Corporation nor any of its direct or indirect subsidiaries and affiliates (collectively: “NVIDIA”) make any representations or warranties, expressed or implied, as to the accuracy or completeness of the information contained in this document and assumes no responsibility for any errors contained herein. NVIDIA shall have no liability for the consequences or use of such information or for any infringement of patents or other rights of third parties that may result from its use. This document is not a commitment to develop, release, or deliver any Material (defined below), code, or functionality.

NVIDIA reserves the right to make corrections, modifications, enhancements, improvements, and any other changes to this document, at any time without notice.

Customer should obtain the latest relevant information before placing orders and should verify that such information is current and complete.

NVIDIA products are sold subject to the NVIDIA standard terms and conditions of sale supplied at the time of order acknowledgement, unless otherwise agreed in an individual sales agreement signed by authorized representatives of NVIDIA and customer (“Terms of Sale”). NVIDIA hereby expressly objects to applying any customer general terms and conditions with regards to the purchase of the NVIDIA product referenced in this document. No contractual obligations are formed either directly or indirectly by this document.

NVIDIA products are not designed, authorized, or warranted to be suitable for use in medical, military, aircraft, space, or life support equipment, nor in applications where failure or malfunction of the NVIDIA product can reasonably be expected to result in personal injury, death, or property or environmental damage. NVIDIA accepts no liability for inclusion and/or use of NVIDIA products in such equipment or applications and therefore such inclusion and/or use is at customer’s own risk.

NVIDIA makes no representation or warranty that products based on this document will be suitable for any specified use. Testing of all parameters of each product is not necessarily performed by NVIDIA. It is customer’s sole responsibility to evaluate and determine the applicability of any information contained in this document, ensure the product is suitable and fit for the application planned by customer, and perform the necessary testing for the application in order to avoid a default of the application or the product. Weaknesses in customer’s product designs may affect the quality and reliability of the NVIDIA product and may result in additional or different conditions and/or requirements beyond those contained in this document. NVIDIA accepts no liability related to any default, damage, costs, or problem which may be based on or attributable to: (i) the use of the NVIDIA product in any manner that is contrary to this document or (ii) customer product designs.

No license, either expressed or implied, is granted under any NVIDIA patent right, copyright, or other NVIDIA intellectual property right under this document. Information published by NVIDIA regarding third-party products or services does not constitute a license from NVIDIA to use such products or services or a warranty or endorsement thereof. Use of such information may require a license from a third party under the patents or other intellectual property rights of the third party, or a license from NVIDIA under the patents or other intellectual property rights of NVIDIA.

Reproduction of information in this document is permissible only if approved in advance by NVIDIA in writing, reproduced without alteration and in full compliance with all applicable export laws and regulations, and accompanied by all associated conditions, limitations, and notices.

THIS DOCUMENT AND ALL NVIDIA DESIGN SPECIFICATIONS, REFERENCE BOARDS, FILES, DRAWINGS, DIAGNOSTICS, LISTS, AND OTHER DOCUMENTS (TOGETHER AND SEPARATELY, “MATERIALS”) ARE BEING PROVIDED “AS IS.” NVIDIA MAKES NO WARRANTIES, EXPRESSED, IMPLIED, STATUTORY, OR OTHERWISE WITH RESPECT TO THE MATERIALS, AND EXPRESSLY DISCLAIMS ALL IMPLIED WARRANTIES OF NONINFRINGEMENT, MERCHANTABILITY, AND FITNESS FOR A PARTICULAR PURPOSE. TO THE EXTENT NOT PROHIBITED BY LAW, IN NO EVENT WILL NVIDIA BE LIABLE FOR ANY DAMAGES, INCLUDING WITHOUT LIMITATION ANY DIRECT, INDIRECT, SPECIAL, INCIDENTAL, PUNITIVE, OR CONSEQUENTIAL DAMAGES, HOWEVER CAUSED AND REGARDLESS OF THE THEORY OF LIABILITY, ARISING OUT OF ANY USE OF THIS DOCUMENT, EVEN IF NVIDIA HAS BEEN ADVISED OF THE POSSIBILITY OF SUCH DAMAGES. Notwithstanding any damages that customer might incur for any reason whatsoever, NVIDIA’s aggregate and cumulative liability towards customer for the products described herein shall be limited in accordance with the Terms of Sale for the product.

Trademarks

NVIDIA, the NVIDIA logo, and Mellanox are trademarks and/or registered trademarks of NVIDIA Corporation and/or Mellanox Technologies Ltd. in the U.S. and in other countries. Other company and product names may be trademarks of the respective companies with which they are associated.



Copyright
© 2022 NVIDIA Corporation & affiliates. All Rights Reserved.

