Document Number: KT34845UG
Rev. 1.0, 6/2009

KIT34845EPEVME Evaluation Board

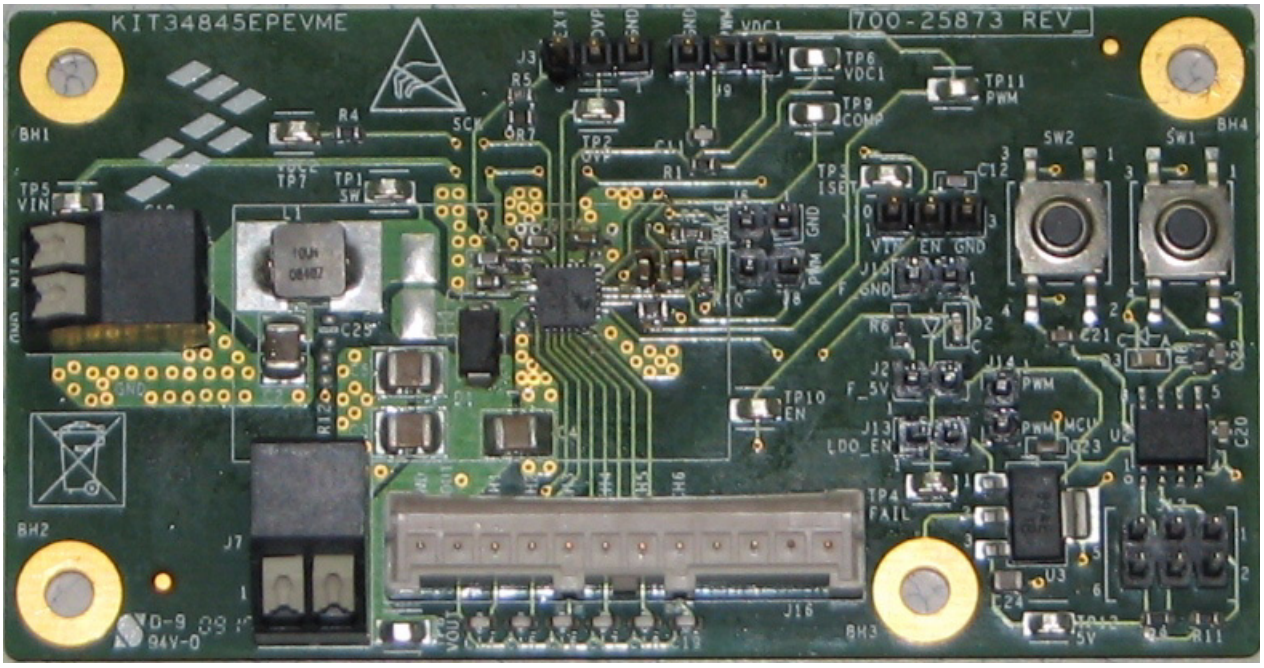

Figure 1. 33845 Evaluation Board (EVB)

Table of Contents

1 Kit Contents / Packing List 2
2 Important Notice 3
3 EVB Introduction 4
4 Required Equipment 6
5 EVB Setup Configuration Diagram 7
6 Using Demo Board 8
7 LED Load Board Configuration (6 Channels x 10 LEDs) 9
8 Performance of the System 10
9 EVB Schematic (1) - MC34845 Section 11
10 EVB Schematic (2) - MC34845 Section 12
11 EVB Schematic (3) - MC34845 MCU Section 13
12 Board Layout 14
13 EVB Board BOM 20
14 References 23
15 Revision History 24

© Freescale Semiconductor, Inc., 2009. All rights reserved.

1 Kit Contents / Packing List

- EVB - KIT34845EPEVME
- Cable for LED board connection
- CD

2 Important Notice

Freescale provides the enclosed product(s) under the following conditions:

This evaluation kit is intended for use of ENGINEERING DEVELOPMENT OR EVALUATION PURPOSES ONLY. It is provided as a sample IC pre-soldered to a printed circuit board to make it easier to access inputs, outputs, and supply terminals. This EVB may be used with any development system or other source of I/O signals by simply connecting it to the host MCU or computer board via off-the-shelf cables. This EVB is not a Reference Design and is not intended to represent a final design recommendation for any particular application. Final device in an application will be heavily dependent on proper printed circuit board layout and heat sinking design as well as attention to supply filtering, transient suppression, and I/O signal quality.

The goods provided may not be complete in terms of required design, marketing, and or manufacturing related protective considerations, including product safety measures typically found in the end product incorporating the goods. Due to the open construction of the product, it is the user's responsibility to take any and all appropriate precautions with regard to electrostatic discharge. In order to minimize risks associated with the customers applications, adequate design and operating safeguards must be provided by the customer to minimize inherent or procedural hazards. For any safety concerns, contact Freescale sales and technical support services.

Should this evaluation kit not meet the specifications indicated in the kit, it may be returned within 30 days from the date of delivery and will be replaced by a new kit.

Freescale reserves the right to make changes without further notice to any products herein. Freescale makes no warranty, representation or guarantee regarding the suitability of its products for any particular purpose, nor does Freescale assume any liability arising out of the application or use of any product or circuit, and specifically disclaims any and all liability, including without limitation consequential or incidental damages. “Typical” parameters can and do vary in different applications and actual performance may vary over time. All operating parameters, including “Typical”, must be validated for each customer application by customer’s technical experts.

Freescale does not convey any license under its patent rights nor the rights of others. Freescale products are not designed, intended, or authorized for use as components in systems intended for surgical implant into the body, or other applications intended to support or sustain life, or for any other application in which the failure of the Freescale product could create a situation where personal injury or death may occur.

Should Buyer purchase or use Freescale products for any such unintended or unauthorized application, Buyer shall indemnify and hold Freescale and its officers, employees, subsidiaries, affiliates, and distributors harmless against all claims, costs, damages, and expenses, and reasonable attorney fees arising out of, directly or indirectly, any claim of personal injury or death associated with such unintended or unauthorized use, even if such claim alleges that Freescale was negligent regarding the design or manufacture of the part.Freescale™ and the Freescale logo are trademarks of Freescale Semiconductor, Inc. All other product or service names are the property of their respective owners. © Freescale Semiconductor, Inc. 2008

3 EVB Introduction

This EVB shows the functionality of MC34845 set up under specific operation parameters.

MC34845 which is a high efficiency, LED driver for use in backlighting LCD displays from 10” to 17”+ can operate in this demo board from a supply of 5V, the device is capable of driving up to 96 LEDs in 6 parallel strings. The current through these 6 channels is matched to within ±2%.

For evaluation purposes this Demo Board includes a simple MCU that allows control of the light dimming of the LEDs as well as the PWM frequency from 200Hz to 26.5kHz.

3.1 EVB Operation Parameters

- Input Voltage (Vin) = 9V +/- 10%
- Expected Output Voltage (Vout) = around 30V
- LED Load = 10 LEDs x 6 Channels
- Duty Cycle = All range (minimum pulse of 400ns)
- Peak Current on all channels = all range up to 20mA
- OVP = 35V (For 10Leds)
- Boost Frequency = 600KHz

3.2 EVB Features

- MCU that allows dimming control at different duty cycles and PWM frequency (200Hz to 26.5kHz)
- Four Layer Board
- Low Noise Design
- Top Layer Placement
- Connector for the 6 LED channels
- Terminal Blocks for Input and output Voltage
- Jumper signal configurations and resistors array for signal adjusting
- Test points measurements

3.3 MC34845 Features

- Input voltage of 5V to 21V
- Output Voltage up to 60V, with auto Vout selection
- 2.0A integrated boost
- Up to 30mA LED current per channel
- 90% efficiency (DC:DC)
- 6-channel current mirror with ±2% current matching
- Input PWM frequency programmable from DC to 100 KHz
- Hardware programmable OVP
- LED failure detection and OTP/OCP/UVLO lockout
- 24-Ld 4x4x0.65mm QFN Pb-Free packaging

3.4 MCU (MC9S08SH8) Features

For this EVB it is important to highlight the following MCU features:

- On Chip memory - 8K FLASH read/program/erase over full operating voltage and temperature.
- Internal Clock Source (ICS) — Internal clock source module containing a frequency-lockedloop (FLL) controlled by internal or external reference; precision trimming of internal reference allows 0.2% resolution and 2% deviation over temperature and voltage
- Real-time counter - 8-bit modulus counter with binary or decimal based prescaler; External clock source for precise time base, time-of-day calendar or task scheduling functions; Free running on-chip low power oscillator (1 kHz) for cyclic wake-up without external components, runs in all MCU modes

For more information about this MCU please refer to :

http://www.freescale.com/files/microcontrollers/doc/data_sheet/MC9S08SH8.pdf

4 Required Equipment

4.1 Hardware Requirements

- Power Supply (up to 30V @ 3A)
- LED Board
- 12 Wires cable for LED board connection

5 EVB Setup Configuration Diagram

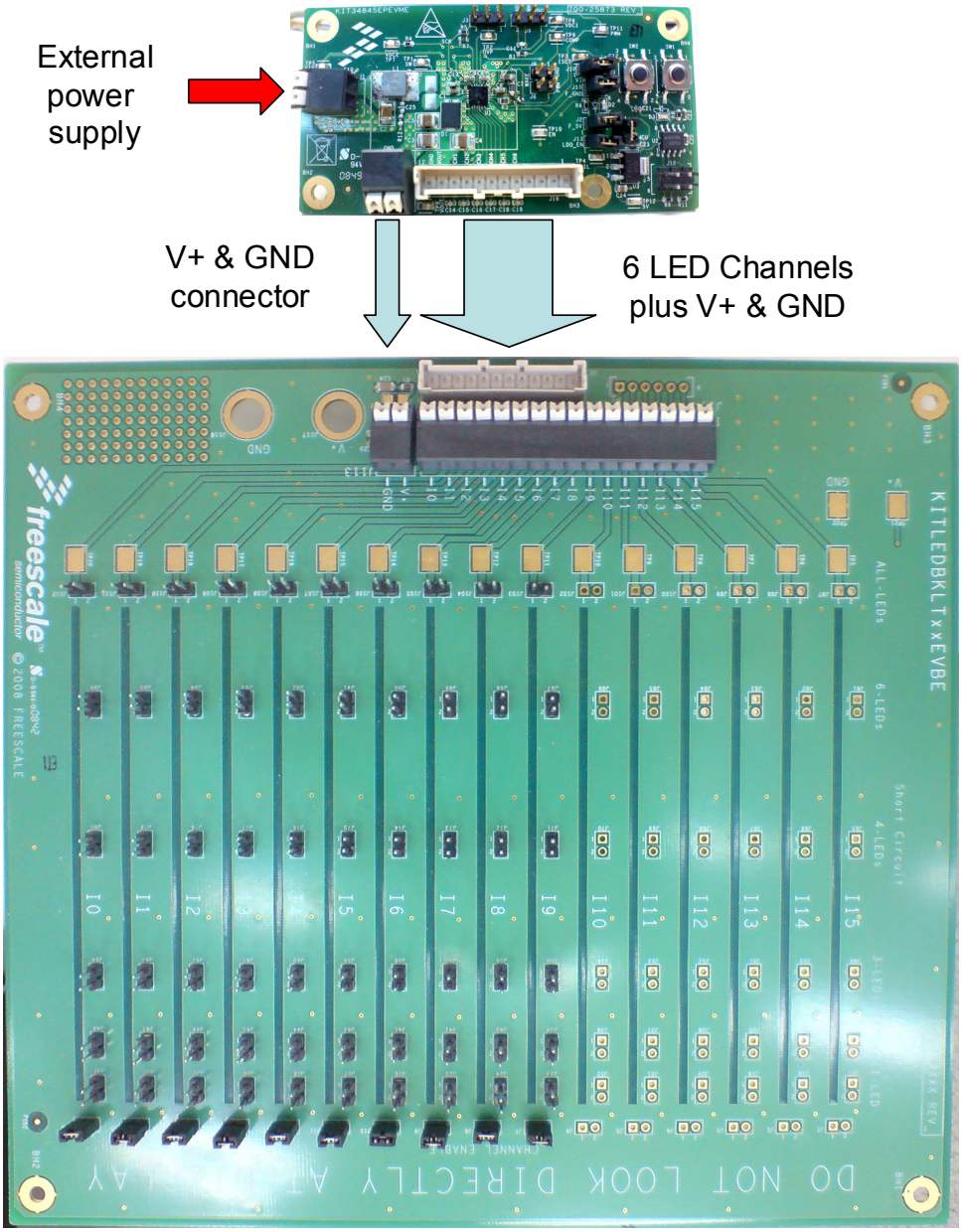

Figure 1. EVB Setup Configuration Diagram

6 Using Demo Board

6.1 Demo Board Jumper Connections

JUMPER CONNECTION	FUNCTION	DESCRIPTION
J2		This jumper connects the FAIL pin to +5V thru a pull-ip resistor.
J3(2-3)		This jumper connects the OVP pin to a resistor divider which sets the OVP value respect to the internal threshold of 6.9V. This resistor divider is connected from Vout to GND. Please refer to Schematic to set the correct resistance value based on your needs.
J6		This jumper connects the WAKE pin to GND.
J8		This jumpers connects WAKE and PWM together, thus enabling the low power consumption (shutdown) mode without the need of using an extra logic signal for enable.
J9(1-2)		Sets PWM pin to HIGH level, i.e. 100% duty cycle,
J9(2-3)		Sets PWM pin to LOW level, i.e. 0% duty cycle.
J10(1-2)		Enables the IC as it takes EN to HIGH.
J10(2-3)		DIsables the IC as it takes EN to GND. Connection used when operating in WAKE operation.
J13		Powers up the +5V LDO regulator for the MCU and fail circuits.
J14		Connects the the PWM signal generated by the MCU to the PWM pin of the IC.
J15		Connect LED for Fail condition indicator. When a fault situation is detected such as an LED channel open or boost over-current this pin goes into high impedance, making the LED to light up. (LED ON = Fail Condition, LED OFF = OK)

Note: Jumpers J9 & J14 should not be connected at the same time.

6.2 Demo Board Operation

6.2.1 Stand Alone Mode, i.e. On-board PWM Dimming

Apply an external power supply to J1. When the LED D3 is turned on, it is possible to increase (SW1) or decrease (SW2) the duty cycle of the PWM dimming signal generated by the MCU. When pressing both switches at the same time and the LED D3 is turned off, it is possible to increase (SW1) up to 26.5KHz or decrease (SW2) down to 200Hz the frequency of the PWM dimming signal generated by the MCU.

6.2.2 External Control Mode

Remove jumpers at J9 and J14. Apply an external power supply to J1. Thru a function generator apply a 0V to 5V square wave signal to the test point TP11. With this external signal, it is possible to evaluate the PWM dimming performance of the MC34845 by varying both the frequency and duty cycle.

7 LED Load Board Configuration (6 Channels x 10 LEDs)

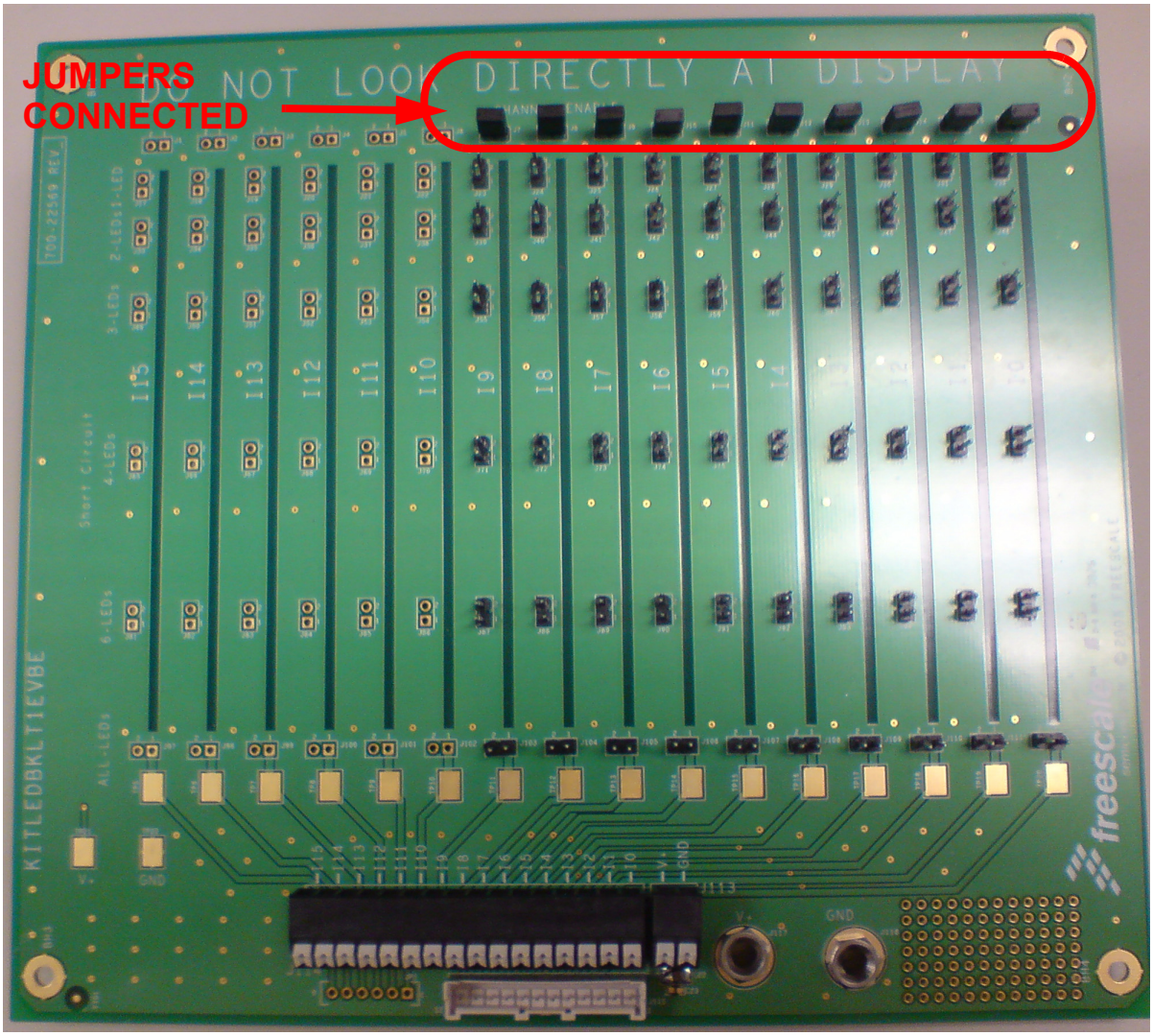

Figure 2. LED Load Board

Jumper Function:

- Top horizontal jumpers: Channel strings enabled. This LED board has all channels populated but for the KIT34845EPEVME it is only necessary to enable from I0 to I5.
- Bottom horizontal jumpers : Short circuits each of the current driver channels to the voltage of the boost.
- Vertical jumpers: Enable/Disable 1,2,3,4 or 6 LEDs per string. Placing a jumper in the first vertical header at the bottom will enable only 10 LEDs per string.

8 Performance of the System

8.1 Network Compensation

Since this Boost converter is current controlled, a Type II compensation is needed. For this type of compensation it is recommended to push out the Right Half Plane Zero to higher frequencies where it will not significantly affect the overall loop.

$$f_{RHPZ} = \frac{V_{OUT} \times (1 - D)^2}{I_{OUT} \times 2\pi \times L}$$

The crossover frequency must be set much lower than the location of the Right Half Plane Zero.

$$f_{CROSS} = \frac{f_{RHPZ}}{5}$$

Since the MC34845 has a fixed slope compensation, R_{COMP} should be fixed for all configurations, i.e. R_{COMP} = 8.2kΩ. As a result, C_{COMP1} and C_{COMP2} should be calculated as follows:

$$C_{COMP1} = \frac{2}{2\pi \times f_{CROSS} \times R_{COMP}}$$

$$C_{COMP2} = \frac{G_M}{2\pi \times f_{SW}}$$

The recommended values of these capacitors for an acceptable performance of the system in different operating conditions are C_{COMP1} = C_7 = 2.2nF and C_{COMP2} = C_8 = 56pF.

In order to improve the transient response of the boost a resistor divider, R_2 and R_{10}, has been implemented from the PWM pin to ground with a connection to the compensation network. This configuration injects a 1V signal to the COMP pin and the equivalent Thevenin resistance of the divider is close to R_{COMP}, i.e. R_2 = 10kΩ and R_{10} = 39kΩ.

If a faster transient response is needed, a higher voltage (e.g. 1.3V) should be injected to the COMP pin; so the resistor divider should be modified accordingly but keeping the equivalent Thevenin resistance of the divider close to R_{COMP}.

9 EVB Schematic (1) - MC34845 Section

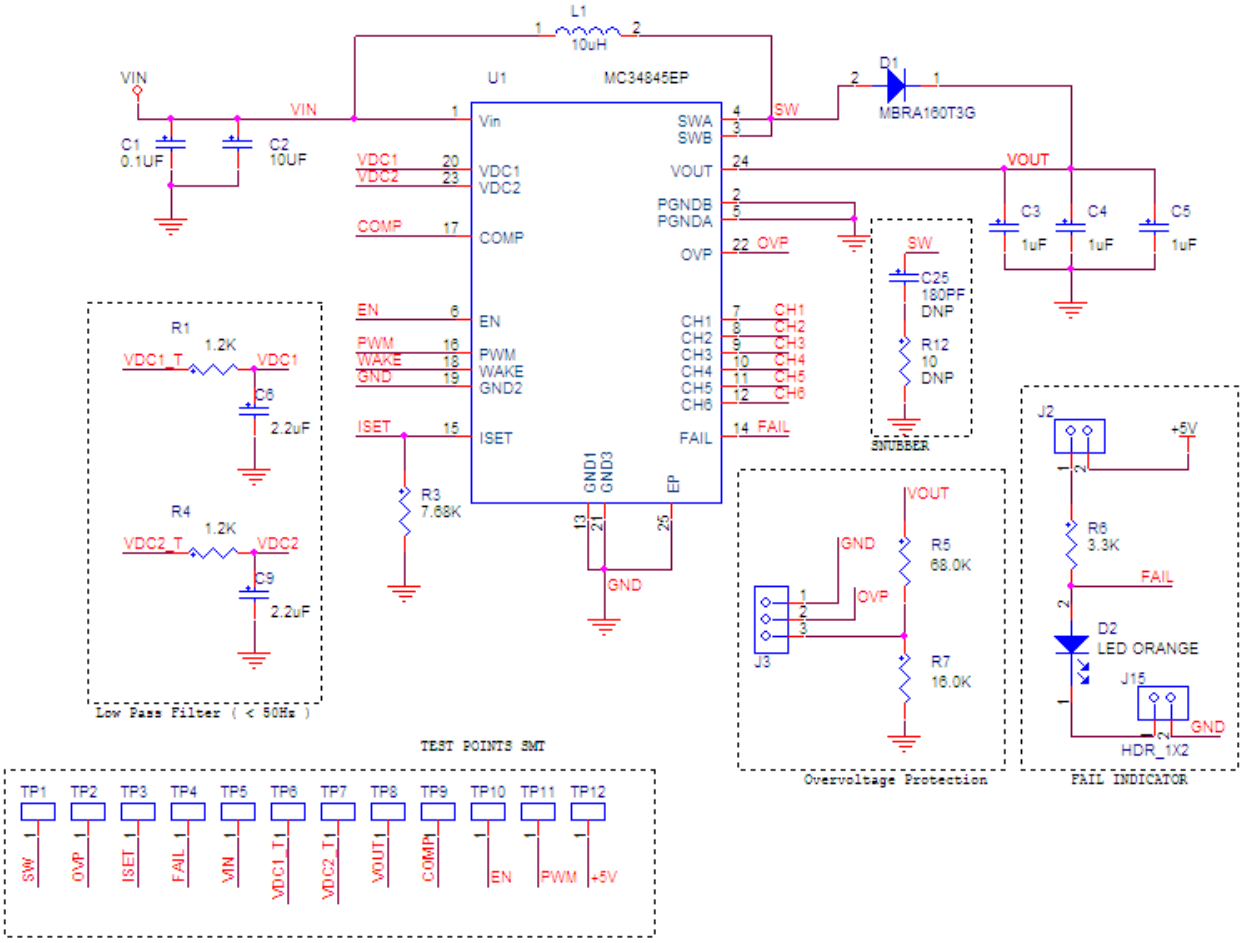

Figure 3. EVB Schematic (1)

10 EVB Schematic (2) - MC34845 Section

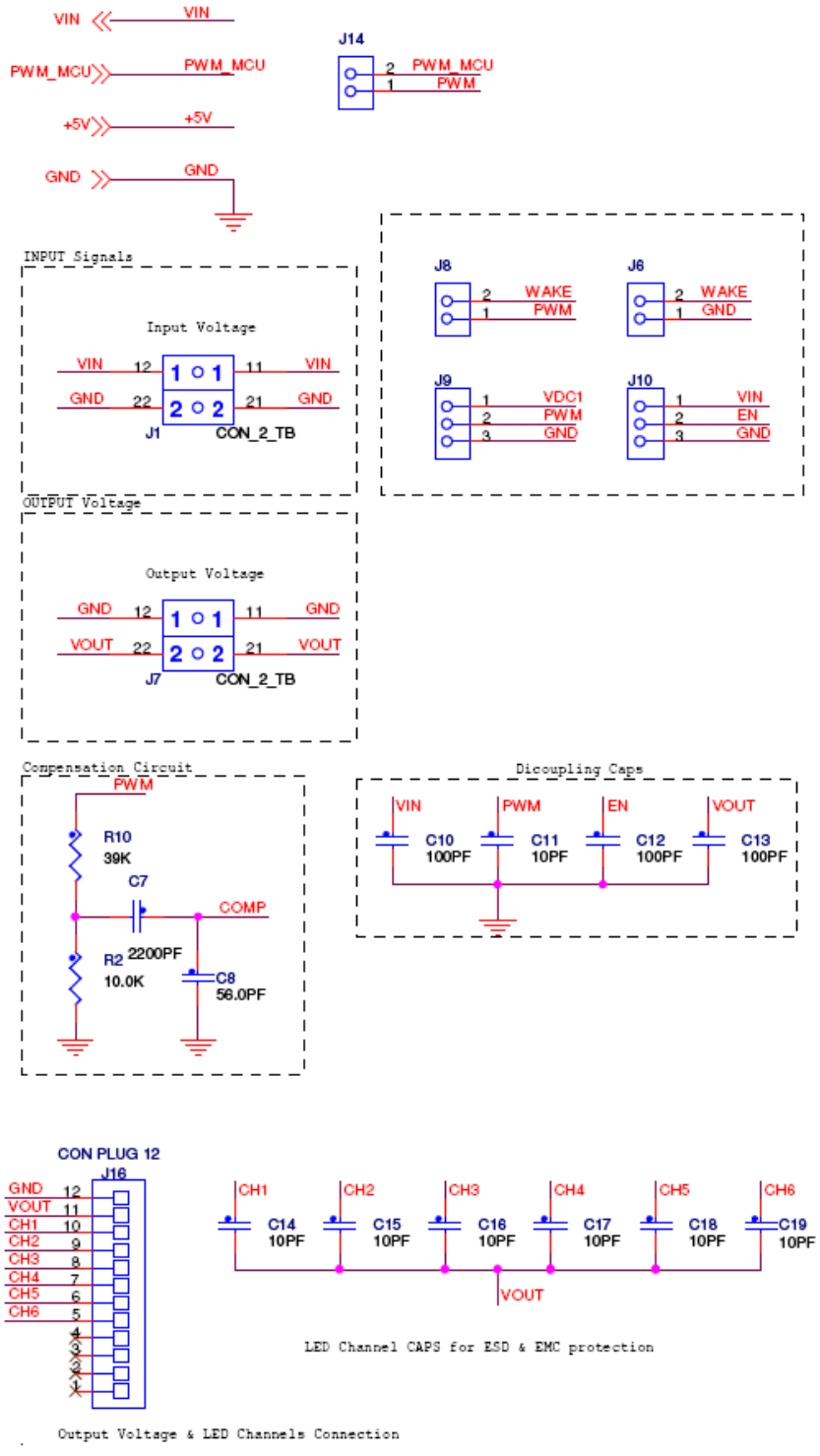

Figure 4. EVB Schematic (2)

11 EVB Schematic (3) - MC34845 MCU Section

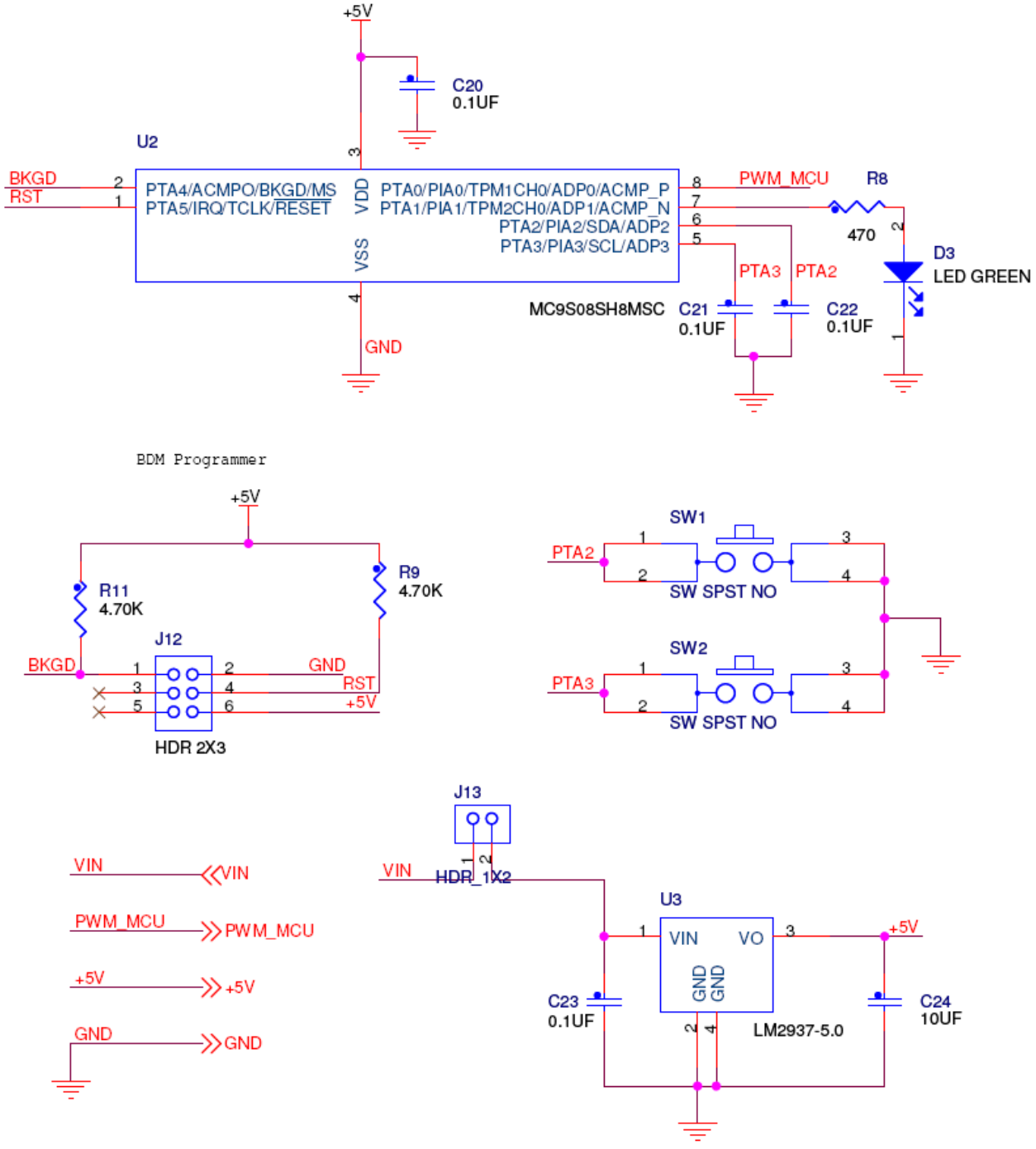

Figure 5. EVB Schematic (3)

12 Board Layout

12.1 Assembly Layer Top

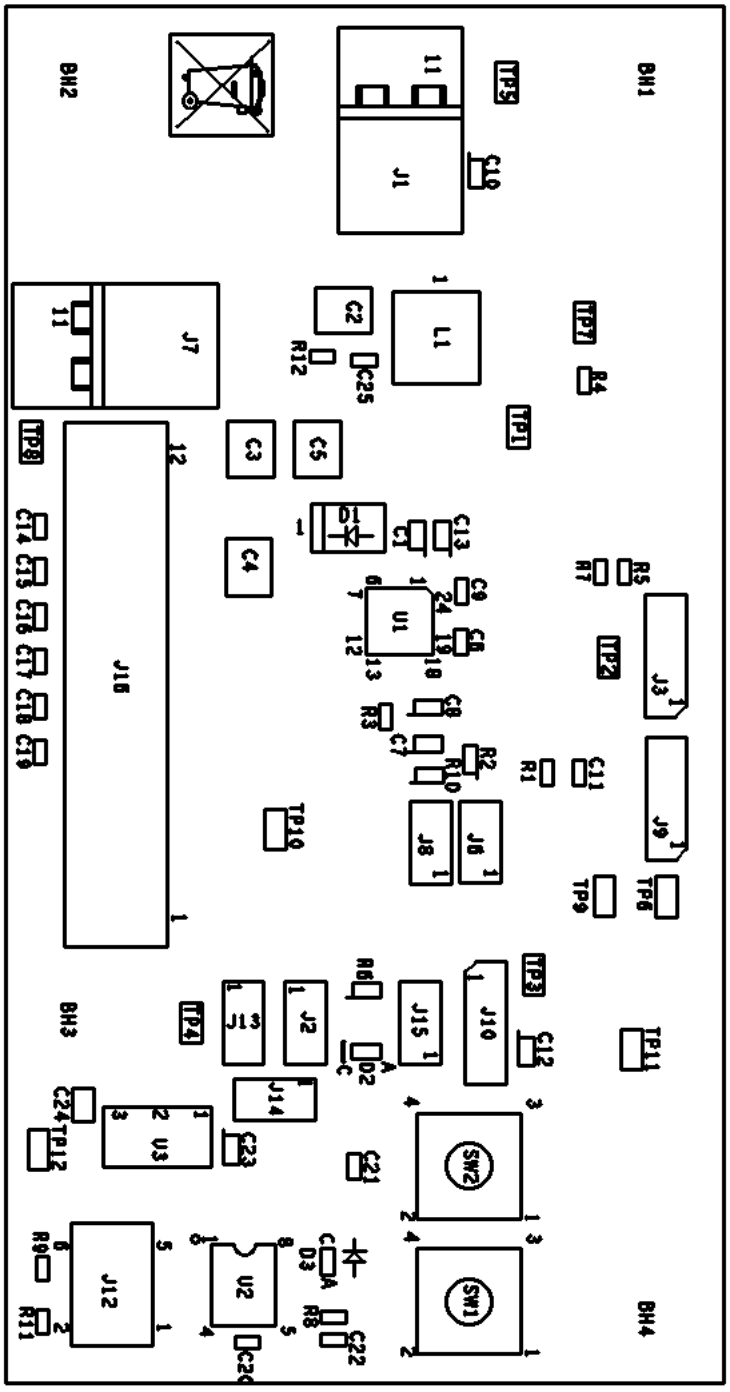

Figure 6. Assembly Layer Top

12.2 Silk Screen Top

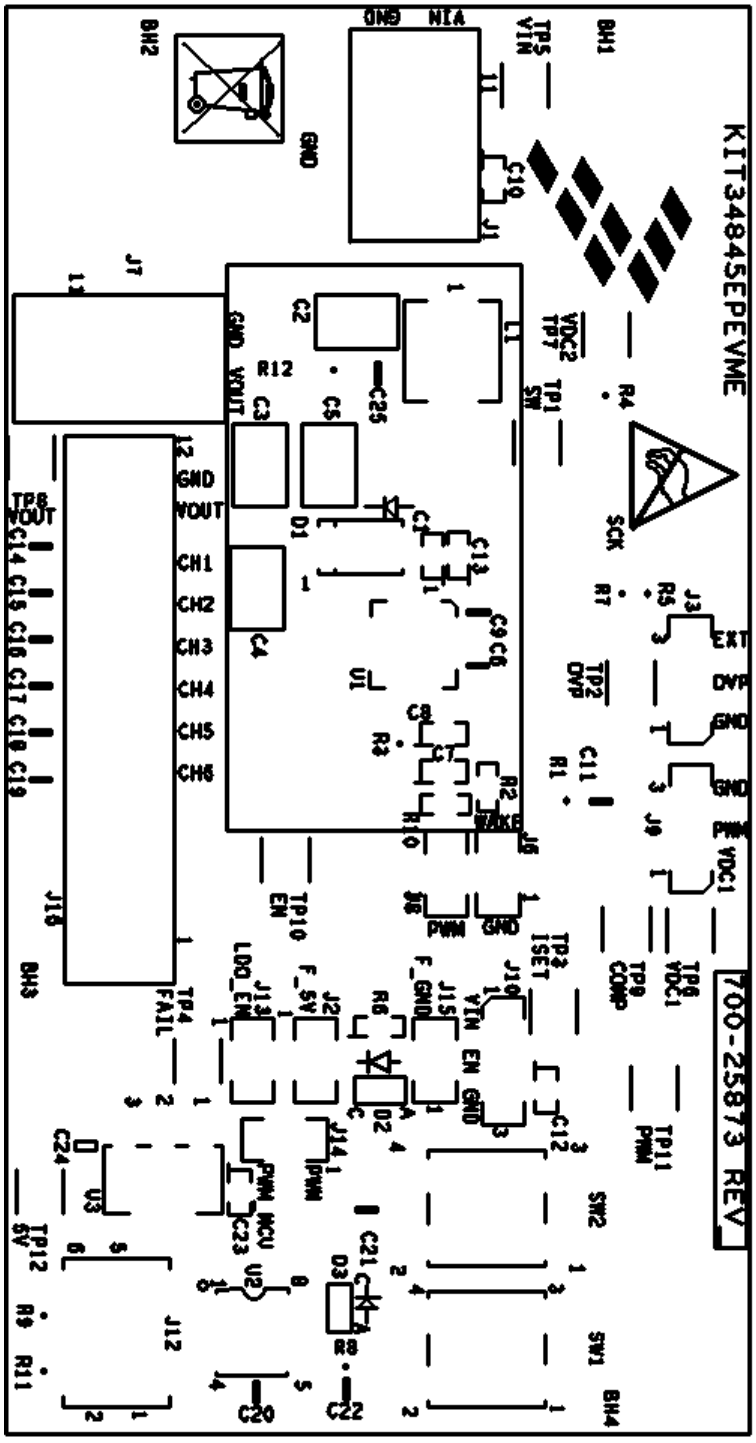

Figure 7. Silk Screen Top

12.3 Top Layer Routing

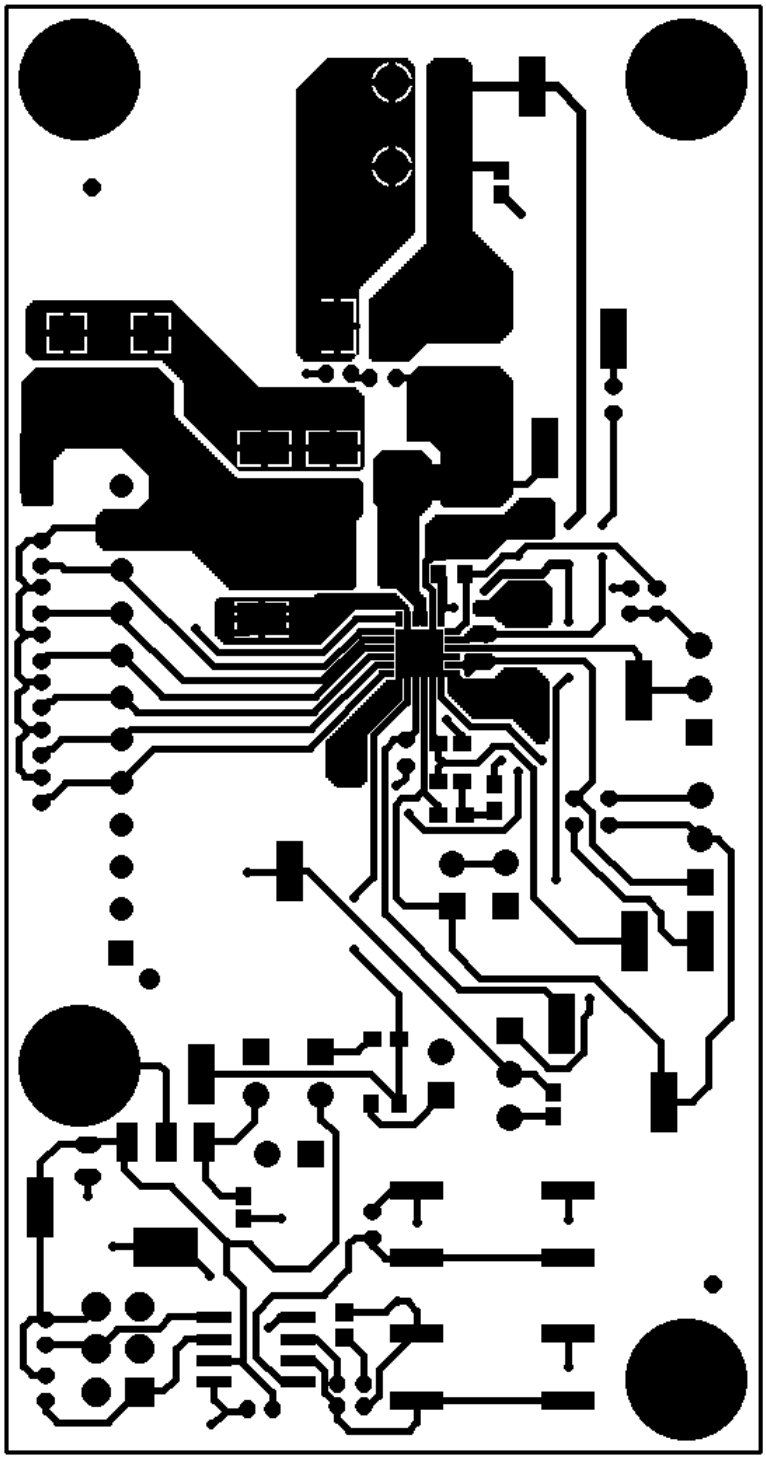

Figure 8. Top Layer Routing

12.4 Bottom Layer - GND Plane and Routing

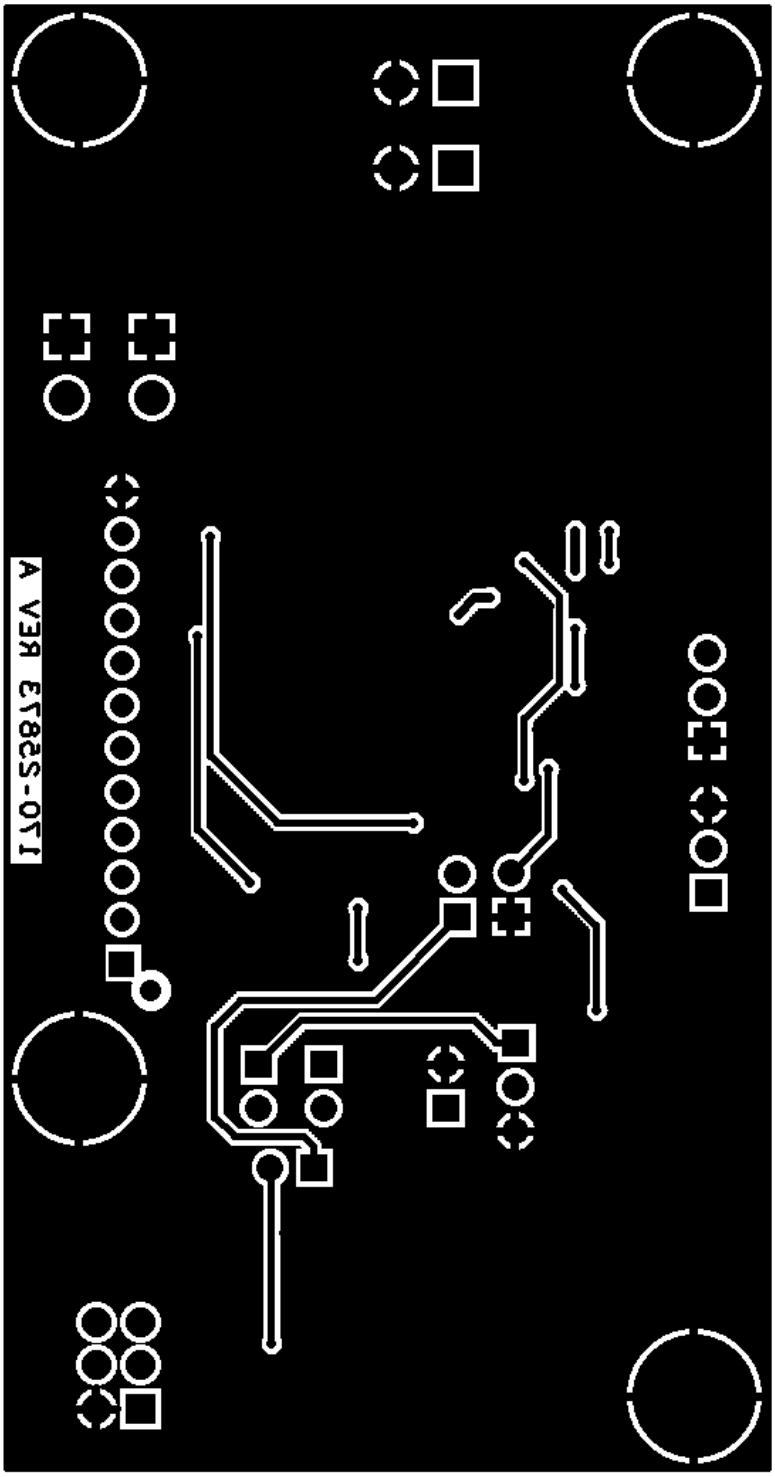

Figure 9. Bottom Layer - GND Plane

12.5 Silk Screen Bottom - (Mirrored)

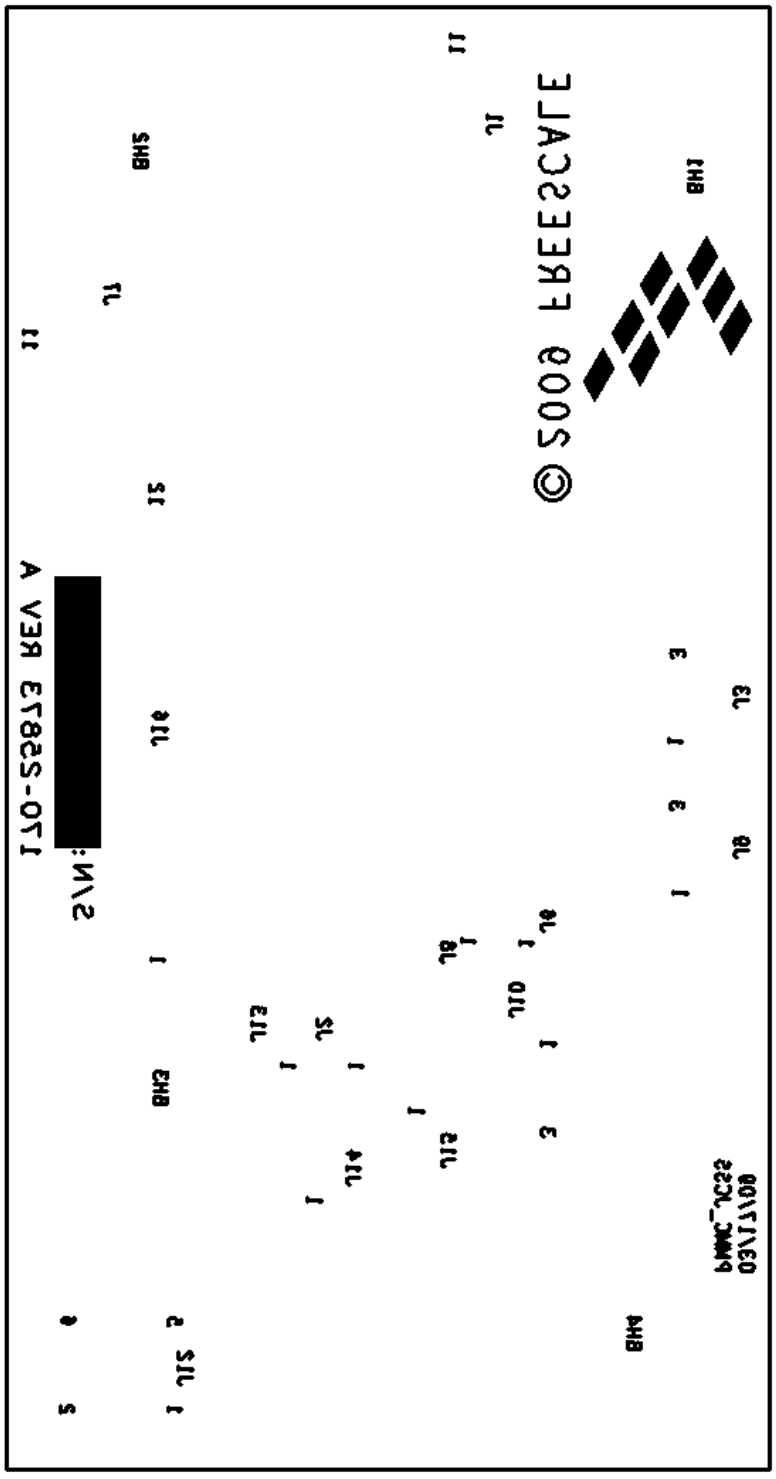

Figure 10. Silk Screen Bottom

12.6 Fabrication Drawing

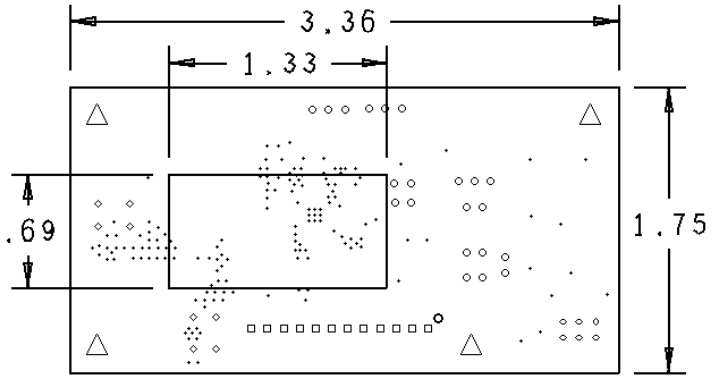

DRILL CHART: TOP to BOTTOM				
ALL UNITS ARE IN MILS				
FIGURE	SIZE	TOLERANCE	PLATED	QTY
·	13.0	+3.0/-3.0	PLATED	154
▫	35.0	+3.0/-3.0	PLATED	12
◇	39.4	+3.0/-3.0	PLATED	5
◇	39.4	+3.0/-3.0	PLATED	1
○	40.0	+3.0/-3.0	PLATED	21
◇	47.2	+3.0/-3.0	PLATED	8
△	130.0	+3.0/-3.0	PLATED	4
○	47.0	+2.0/-2.0	NON-PLATED	1

Figure 11. Fabrication Drawing

13 EVB Board BOM

Schematic Designator	Device	Type	Description	Manufacturer PN
Freescale Components				
U1	MC34845EP	qfn24	IC DRV 6 Channel LED 600kHz 5-21V QFN 24	**MC34845EP**
U2	MC9S08SH8MSC	qfn48	IC MCU 8BIT 48MHZ 8KB FLASH 2.7-5.5V QFN8	**MC9S08SH8MSC**
Capacitors & Resistors				
C1	0.1UF	CC0603	CAP CER 0.1UF 50V 10% X7R 0603	GRM188R71H104KA93D
C2	10UF	CC1210	CAP CER 10UF 35V +80%/-20% Y5V 1210	GMK325F106ZH
C3	1uF	CC1210	CAP CER 1UF 100V 10% X7R 1210	HMK325B7105KN-T
C4	1uF	CC1210	CAP CER 1UF 100V 10% X7R 1210	HMK325B7105KN-T
C5	1uF	CC1210	CAP CER 1UF 100V 10% X7R 1210	HMK325B7105KN-T
C6	2.2uF	CC0603_OV	CAP CER 2.2UF 16V 10% X5R 0603	GRM188R61C225KE15D
C7	2200PF	CC0603	CAP CER 2200PF 50V 10% X7R 0603	C0603C222K5RACTU
C8	56.0PF	CC0603	CAP CER 56.0PF 50V 5% C0G 0603	GRM1885C1H560JA01D
C9	2.2uF	CC0603_OV	CAP CER 2.2UF 16V 10% X5R 0603	GRM188R61C225KE15D
C10	100PF	CC0603	CAP CER 100PF 50V 10% X7R 0603	C0603X7R500-101KNP
C11	10PF	CC0603_OV	CAP CER 10PF 50V 1% C0G 0603	C0603C100F5GAC
C12	100PF	CC0603	CAP CER 100PF 50V 10% X7R 0603	C0603X7R500-101KNP
C13	100PF	CC0603	CAP CER 100PF 50V 10% X7R 0603	C0603X7R500-101KNP
C14	10PF	CC0603_OV	CAP CER 10PF 50V 1% C0G 0603	C0603C100F5GAC
C15	10PF	CC0603_OV	CAP CER 10PF 50V 1% C0G 0603	C0603C100F5GAC
C16	10PF	CC0603_OV	CAP CER 10PF 50V 1% C0G 0603	C0603C100F5GAC
C17	10PF	CC0603_OV	CAP CER 10PF 50V 1% C0G 0603	C0603C100F5GAC
C18	10PF	CC0603_OV	CAP CER 10PF 50V 1% C0G 0603	C0603C100F5GAC
C19	10PF	CC0603_OV	CAP CER 10PF 50V 1% C0G 0603	C0603C100F5GAC
C20	0.1UF	CC0603_OV	CAP CER 0.10UF 25V 10% X7R 0603	C0603C104K3RAC
C21	0.1UF	CC0603_OV	CAP CER 0.10UF 25V 10% X7R 0603	C0603C104K3RAC
C22	0.1UF	CC0603_OV	CAP CER 0.10UF 25V 10% X7R 0603	C0603C104K3RAC
C23	0.1UF	CC0603	CAP CER 0.1UF 50V 10% X7R 0603	GRM188R71H104KA93D
C24	10UF	CC0805_OV	CAP CER 10UF 16V 10% X5R 0805	0805YD106KAT2A
R1	1.2K	RC0603_OV	RES MF 1.2K 1/10W 1% 0603	RK73H1JTTD1201F
R2	10.0K	RC0603	RES MF 10.0K 1/10W 1% 0603	RK73H1JTTD1002F
R3	7.68K	RC0603_OV	RES MF 7.68K 1/10W 1% 0603	RK73H1JTTD7681F
R4	1.2K	RC0603_OV	RES MF 1.2K 1/10W 1% 0603	RK73H1JTTD1201F
R5	115.0K	RC0603_OV	RES MF 115.0K 1/10W 1% 0603	RK73H1JTTD1153F
R6	3.3K	RC0603	RES MF 3.30K 1/10W 1% 0603	RK73H1JTTD3301F
R7	16.0K	RC0603_OV	RES MF 16.0K 1/10W 1% 0603	RK73H1JTTD1602F
R8	470	RC0603_OV	RES MF 470 OHM 1/10W 5% 0603	CR0603-10W-471JT
R9	4.70K	RC0603_OV	RES MF 4.70K 1/10W 1% 0603	RK73H1JTTD4701F
R10	39K	RC0603_OV	RES MF 39.0K 1/10W 1% 0603	RK73H1JTTD3902F
R11	4.70K	RC0603_OV	RES MF 4.70K 1/10W 1% 0603	RK73H1JTTD4701F

Freescale does not assume liability, endorse, or warrant components from external manufacturers that are referenced in circuit drawings or tables. While Freescale offers component recommendations in this configuration, it is the customer's responsibility to validate their application

Schematic Designator	Device	Type	Description	Manufacturer PN
Diodes				
D1	MBRA160T3G	case403d_02	DIODE SCH PWR RECT 1A 60V CASE 403D	MBRA160T3G
D2	LED ORANGE	0603led	LED OR SGL 20MA 0603	LO L29K-J2L1-24-Z
D3	LED GREEN	led_0603_c1	LED GRN SGL 20MA SMT	HSMG-C190
Headers and Connectors				
J1	CON_2_TB	con2x2_tb_3p5_th	CON 1X2 TB TH 3.5MM SP 508H SN	1885180000
J2	HDR_1X2	HDR102	HDR 1X2 TH 100MIL SP 375H AU	826629-2
J3	HDR_1X3	HDR103	HDR 1X3 TH 100MIL SP 330H AU	TSW-103-07-G-S
J6	HDR_1X2	HDR102	HDR 1X2 TH 100MIL SP 375H AU	826629-2
J7	CON_2_TB	con2x2_tb_3p5_th	CON 1X2 TB TH 3.5MM SP 508H SN	1885180000
J8	HDR_1X2	HDR102	HDR 1X2 TH 100MIL SP 375H AU	826629-2
J9	HDR_1X3	HDR103	HDR 1X3 TH 100MIL SP 330H AU	TSW-103-07-G-S
J10	HDR_1X3	HDR103	HDR 1X3 TH 100MIL SP 330H AU	TSW-103-07-G-S
J12	HDR 2X3	hdr203_m20	HDR 2X3 TH 2.54MM CTR 340H AU	M20-9980345
J13	HDR_1X2	HDR102	HDR 1X2 TH 100MIL SP 375H AU	826629-2
J14	HDR_1X2	HDR102	HDR 1X2 TH 100MIL SP 375H AU	826629-2
J15	HDR_1X2	HDR102	HDR 1X2 TH 100MIL SP 375H AU	826629-2
J16	CON PLUG 12	hdr_12_xask	CON 1X12 PLUG SHRD TH 2.5MM SP 346H SN 110L	B12B-XASK-1(LF)(SN)
Inductors				
L1	10UH	ind_ihlp_2020	IND PWR 10UH@100KHZ 2.3A 20% SMT	IHLP2020BZER100M01
L1 (MC34845A)	4.7UH	ind_ihlp_2020	IND PWR 4.7UH@100KHZ 2.8A 20% SMT	IHLP2020BZER4R7M01
IC				
U3	LM2937-5.0	sot223	IC VREG LDO 5V 500MA 26V SOT-223	LM2937IMP-5.0/NOPB
Test Points				
TP1	TEST POINT	testpoint_138_059	TEST POINT PIN .138X.059 SMT	C12000B
TP2	TEST POINT	testpoint_138_059	TEST POINT PIN .138X.059 SMT	C12000B
TP3	TEST POINT	testpoint_138_059	TEST POINT PIN .138X.059 SMT	C12000B
TP4	TEST POINT	testpoint_138_059	TEST POINT PIN .138X.059 SMT	C12000B
TP5	TEST POINT	testpoint_138_059	TEST POINT PIN .138X.059 SMT	C12000B
TP6	TEST POINT	testpoint_138_059	TEST POINT PIN .138X.059 SMT	C12000B
TP7	TEST POINT	testpoint_138_059	TEST POINT PIN .138X.059 SMT	C12000B
TP8	TEST POINT	testpoint_138_059	TEST POINT PIN .138X.059 SMT	C12000B
TP9	TEST POINT	testpoint_138_059	TEST POINT PIN .138X.059 SMT	C12000B
TP10	TEST POINT	testpoint_138_059	TEST POINT PIN .138X.059 SMT	C12000B
TP11	TEST POINT	testpoint_138_059	TEST POINT PIN .138X.059 SMT	C12000B
TP12	TEST POINT	testpoint_138_059	TEST POINT PIN .138X.059 SMT	C12000B
Push buttons				
SW1	SW SPST NO	sw4_spst_sq6p	SW SPST MOM NO PB SMT 32V 50MA SM	KSC321GLFS
SW2	SW SPST NO	sw4_spst_sq6p	SW SPST MOM NO PB SMT 32V 50MA SM	KSC321GLFS

Freescale does not assume liability, endorse, or warrant components from external manufacturers that are referenced in circuit drawings or tables. While Freescale offers component recommendations in this configuration, it is the customer's responsibility to validate their application

In some PWM dimming frequencies, it could be perceivable some audible noise from the input and output capacitors of the boost converter. These micro-mechanical vibrations are an effect of the subharmonics produced from the boost switching frequency.

In order to minimize this effect plus slightly improve the efficiency of the system, it is recommended to replace the following components:

Schematic Designator	Device	Type	Description	Manufacturer PN
C2	10UF	CC1210	CAP CER 10UF 50V +/-10% X7R 1210	GJ832ER7YA106KA12L
C3	4.7uF	CC1206	CAP CER 4.7UF 50V +/-10% X7R 1206	GJ831CR71H475KA12L
C4	DNP	-	-	-
C5	DNP	-	-	-
Inductor				
L1	10UF	ind_ihlp_2525	IND PWR 10UH@100KHZ 2.3A 20% SMT	IHLP2525CZER100M01
Freescale does not assume liability, endorse, or warrant components from external manufacturers that are referenced in circuit drawings or tables. While Freescale offers component recommendations in this configuration, it is the customer's responsibility to validate their application				

14 References

Following are URLs where you can obtain information on other Freescale products and application solutions:

Description	URL
Data Sheet	www.freescale.com/files/analog/doc/data_sheet/MC34845.pdf
Freescale's Web Site	www.freescale.com
Freescale's Analog Web Site	www.freescale.com/analog
Freescale's Power Management Web Site	www.freescale.com/pm
Freescale's LED Drivers	www.freescale.com/webapp/sps/site/taxonomy.jsp?code=LEDBLDRIVER

15 Revision History

REVISION	DATE	DESCRIPTION OF CHANGES
1.0		• Initial Release

How to Reach Us:

Home Page:
www.freescale.com

Web Support:
http://www.freescale.com/support

USA/Europe or Locations Not Listed:
Freescale Semiconductor, Inc.
Technical Information Center, EL516
2100 East Elliot Road
Tempe, Arizona 85284
1-800-521-6274 or +1-480-768-2130
www.freescale.com/support

Europe, Middle East, and Africa:
Freescale Halbleiter Deutschland GmbH
Technical Information Center
Schatzbogen 7
81829 Muenchen, Germany
+44 1296 380 456 (English)
+46 8 52200080 (English)
+49 89 92103 559 (German)
+33 1 69 35 48 48 (French)
www.freescale.com/support

Japan:
Freescale Semiconductor Japan Ltd.
Headquarters
ARCO Tower 15F
1-8-1, Shimo-Meguro, Meguro-ku,
Tokyo 153-0064
Japan
0120 191014 or +81 3 5437 9125
support.japan@freescale.com

Asia/Pacific:
Freescale Semiconductor China Ltd.
Exchange Building 23F
No. 118 Jianguo Road
Chaoyang District
Beijing 100022
China
+86 10 5879 8000
support.asia@freescale.com

For Literature Requests Only:
Freescale Semiconductor Literature Distribution Center
P.O. Box 5405
Denver, Colorado 80217
1-800-441-2447 or +1-303-675-2140
Fax: +1-303-675-2150
LDCForFreescaleSemiconductor@hibbertgroup.com

Information in this document is provided solely to enable system and software implementers to use Freescale Semiconductor products. There are no express or implied copyright licenses granted hereunder to design or fabricate any integrated circuits or integrated circuits based on the information in this document.

Freescale Semiconductor reserves the right to make changes without further notice to any products herein. Freescale Semiconductor makes no warranty, representation or guarantee regarding the suitability of its products for any particular purpose, nor does Freescale Semiconductor assume any liability arising out of the application or use of any product or circuit, and specifically disclaims any and all liability, including without limitation consequential or incidental damages. “Typical” parameters that may be provided in Freescale Semiconductor data sheets and/or specifications can and do vary in different applications and actual performance may vary over time. All operating parameters, including “Typicals”, must be validated for each customer application by customer’s technical experts. Freescale Semiconductor does not convey any license under its patent rights nor the rights of others. Freescale Semiconductor products are not designed, intended, or authorized for use as components in systems intended for surgical implant into the body, or other applications intended to support or sustain life, or for any other application in which the failure of the Freescale Semiconductor product could create a situation where personal injury or death may occur. Should Buyer purchase or use Freescale Semiconductor products for any such unintended or unauthorized application, Buyer shall indemnify and hold Freescale Semiconductor and its officers, employees, subsidiaries, affiliates, and distributors harmless against all claims, costs, damages, and expenses, and reasonable attorney fees arising out of, directly or indirectly, any claim of personal injury or death associated with such unintended or unauthorized use, even if such claim alleges that Freescale Semiconductor was negligent regarding the design or manufacture of the part.



Freescale™ and the Freescale logo are trademarks of Freescale Semiconductor, Inc. All other product or service names are the property of their respective owners.

© Freescale Semiconductor, Inc. 2009. All rights reserved.

KT34845UG
Rev. 1.0
6/2009