Freescale Semiconductor
Data Sheet: Technical Data

Document Number: MC9RS08KA8
Rev. 4, 6/2009

MC9RS08KA8


20-Pin W-SOIC
Case 751D

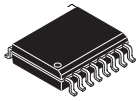
16-Pin W-SOIC
Case 751G

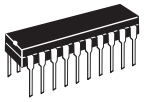
20-Pin PDIP
Case 738C

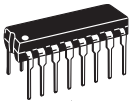
16-Pin PDIP
Case 648

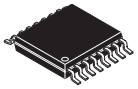
16-Pin TSSOP
Case 948F

MC9RS08KA8 Series

Covers: MC9RS08KA8
MC9RS08KA4

Features:

- 8-Bit RS08 Central Processor Unit (CPU)
  - Up to 20 MHz CPU at 1.8 V to 5.5 V across temperature range of –40°C to 85°C
  - Subset of HC08 instruction set with added BGND instruction
- On-Chip Memory
  - 8 KB flash read/program/erase over full operating voltage and temperature; KA4 has 4 KB flash
  - 254 byte random-access memory (RAM); KA4 has 126 byte RAM
  - Security circuitry to prevent unauthorized access to RAM and flash contents
- Power-Saving Modes
  - Wait and stop
  - Wakeup from power-saving modes using real-time interrupt (RTI), KBI, or ACMP
- Clock Source Options
  - Oscillator (XOSC) — Loop-Control Pierce oscillator; crystal or ceramic resonator range of 31.25 kHz to 39.0625 kHz or 1 MHz to 5 MHz
  - Internal Clock Source (ICS) — Internal clock source module containing a frequency-locked-loop (FLL) controlled by internal or external reference; precision trimming of internal reference allows 0.2% resolution and 2% deviation over temperature and voltage; supports bus frequencies up to 10 MHz
- System Protection
  - Watchdog computer operating properly (COP) reset with option to run from dedicated 1 kHz internal clock source or bus clock
  - Low-Voltage detection with reset or interrupt
  - Illegal opcode detection with reset
  - Illegal address detection with reset
  - Flash block protection
- Development Support
  - Single-Wire background debug interface
  - Breakpoint capability to allow single breakpoint setting during in-circuit debugging
- Peripherals
  - **ADC** — 12-channel, 10-bit resolution; 2.5 µs conversion time; automatic compare function; operation in stop; fully functional from 2.7 V to 5.5 V (8-channels available on 16-pin package)
  - **TPM** — One 2-channel; selectable input capture, output compare, or buffered edge- or center-aligned PWM on each channel
  - **IIC** — Inter-Integrated circuit bus module capable of operation up to 100 kbps with maximum bus loading; capable of higher baudrates with reduced loading
  - **MTIM1 and MTIM2** — Two 8-bit modulo timers
  - **KBI** — Keyboard interrupts with rising or falling edge detect; eight KBI ports in 16-pin and 20-pin packages
  - **ACMP** — Analog comparator: full rail-to-rail supply operation; option to compare to fixed internal bandgap reference voltage; can operate in stop mode
- Input/Output
  - 14/18 GPIOs including one output only pin and one input only pin
  - Hysteresis and configurable pullup device on all input pins; configurable slew rate and drive strength on all output pins
- Package Options
  - 16-pin SOIC, PDIP or TSSOP
  - 20-pin SOIC or PDIP

This document contains information on a product under development. Freescale reserves the right to change or discontinue this product without notice.

© Freescale Semiconductor, Inc., 2008-2009. All rights reserved.

Table of Contents

1 MCU Block Diagram 3
2 Pin Assignments 3
3 Electrical Characteristics 5
3.1 Introduction 5
3.2 Parameter Classification 5
3.3 Absolute Maximum Ratings 6
3.4 Thermal Characteristics 6
3.5 ESD Protection and Latch-Up Immunity 7
3.6 DC Characteristics 8
3.7 Supply Current Characteristics 15
3.8 External Oscillator (XOSC) Characteristics 18
3.9 AC Characteristics 18
3.9.1 Control Timing 19
3.9.2 TPM/MTIM Module Timing 20
3.10 Analog Comparator (ACMP) Electrical 20
3.11 Internal Clock Source Characteristics 21
3.12 ADC Characteristics 21
3.13 Flash Specifications 23
4 Ordering Information 26
5 Mechanical Drawings 26

Revision History

To provide the most up-to-date information, the revision of our documents on the World Wide Web will be the most current. Your printed copy may be an earlier revision. To verify you have the latest information available, refer to:

http://freescale.com/

The following revision history table summarizes changes contained in this document.

Revision	Date	Description of Changes
1	1/22/2008	Initial public release
2	10/7/2008	Updated Figure 4 and Figure 10. Updated “How to Reach Us” information. Added 16-pin TSSOP package information.
3	11/4/2008	Updated operating voltage in Table 7.
4	6/11/2009	Added output voltage of high drive at 5 V, I_{load} = 10 mA in the Table 7.

Related Documentation

Find the most current versions of all documents at: http://www.freescale.com

Reference Manual (MC9RS08KA8RM)

Contains extensive product information including modes of operation, memory, resets and interrupts, register definition, port pins, CPU, and all module information.

1 MCU Block Diagram

The block diagram, Figure 1, shows the structure of the MC9RS08KA8 MCU.

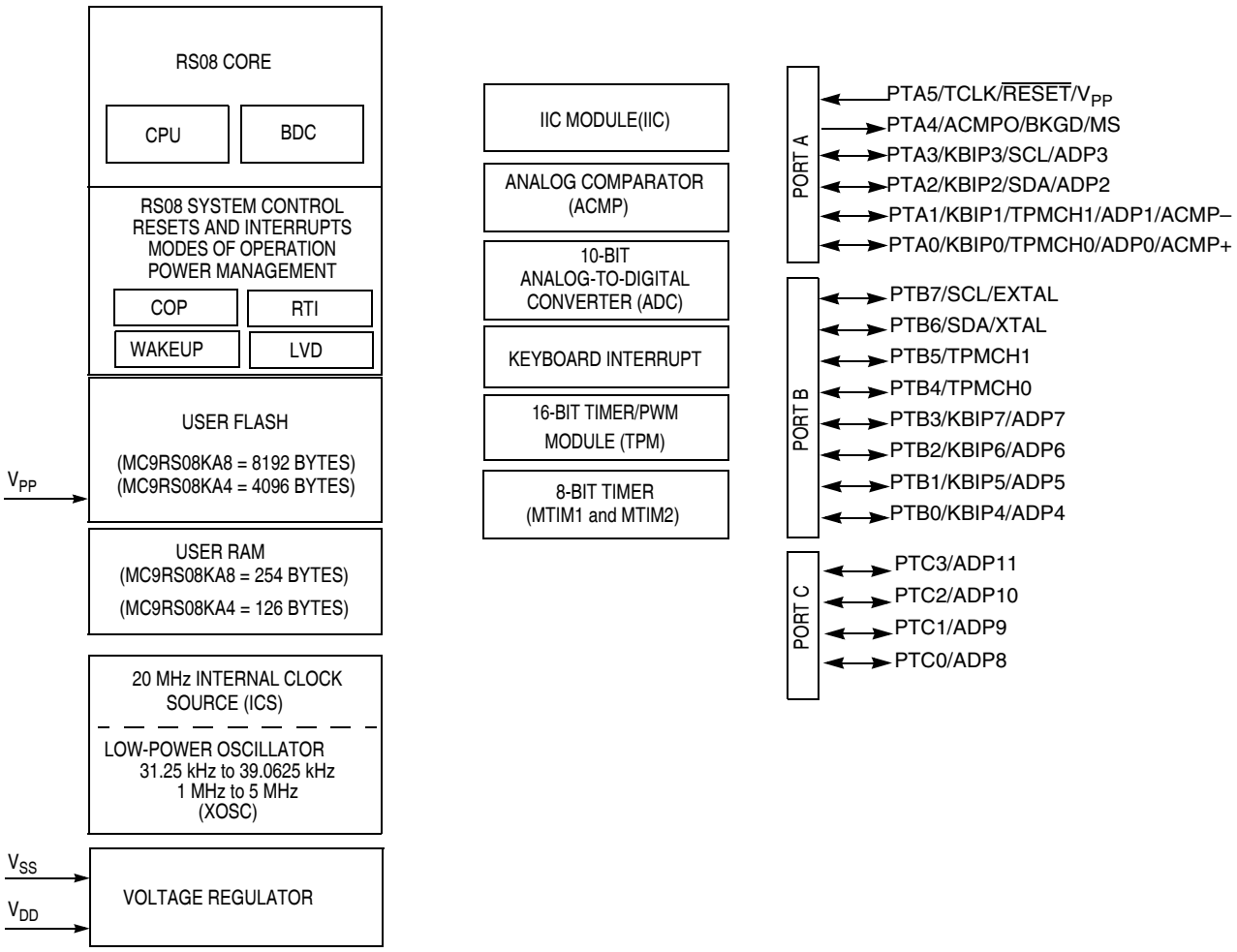

Figure 1. MC9RS08KA8 Series Block Diagram

2 Pin Assignments

This section shows the pin assignments in the packages available for the MC9RS08KA8 series.

Table 1. Pin Availability by Package Pin-Count

Pin Number		<-- Lowest **Priority** --> Highest				
20	**16**	**Port Pin**	**Alt 1**	**Alt 2**	**Alt 3**	**Alt 4**
1	1	PTA5		TCLK	$\overline{\text{RESET}}$	V_{PP}
2	2	PTA4	ACMPO	BKGD	MS	
3	3					V_{DD}
4	4					V_{SS}
5	5	PTB7	SCL[1]			EXTAL
6	6	PTB6	SDA[1]			XTAL
7	7	PTB5	TPMCH1[2]			
8	8	PTB4	TPMCH0[2]			
9	—	PTC3			ADP11	
10	—	PTC2			ADP10	
11	—	PTC1			ADP9	
12	—	PTC0			ADP8	
13	9	PTB3	KBIP7		ADP7	
14	10	PTB2	KBIP6		ADP6	
15	11	PTB1	KBIP5		ADP5	
16	12	PTB0	KBIP4		ADP4	
17	13	PTA3	KBIP3	SCL[1]	ADP3	
18	14	PTA2	KBIP2	SDA[1]	ADP2	
19	15	PTA1	KBIP1	TPMCH1[2]	ADP1	ACMP–
20	16	PTA0	KBIP0	TPMCH0[2]	ADP0	ACMP+

1 IIC pins can be remapped to PTA3 and PTA2

2 TPM pins can be remapped to PTA0 and PTA1

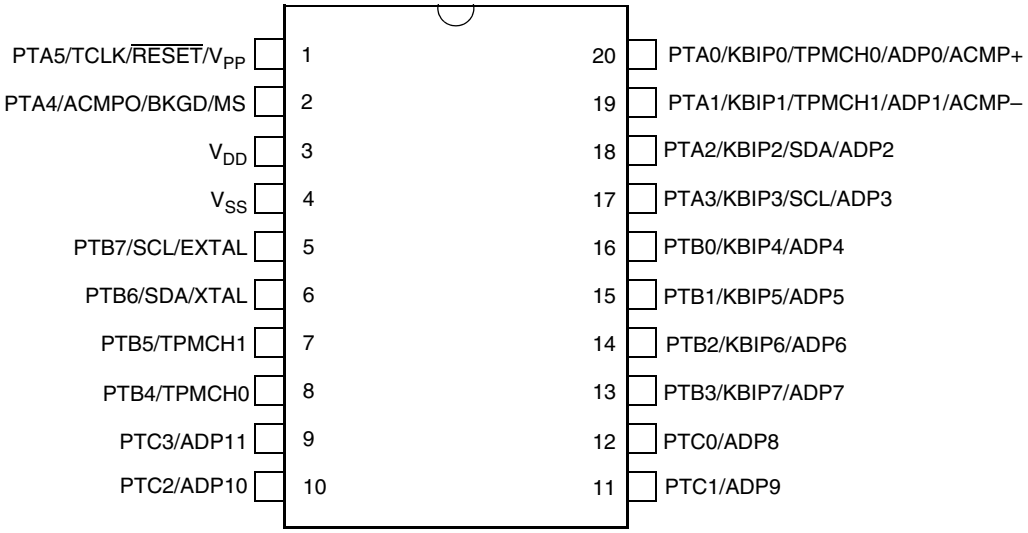

Figure 2. MC9RS08KA8 Series in 20-Pin PDIP/SOIC Package

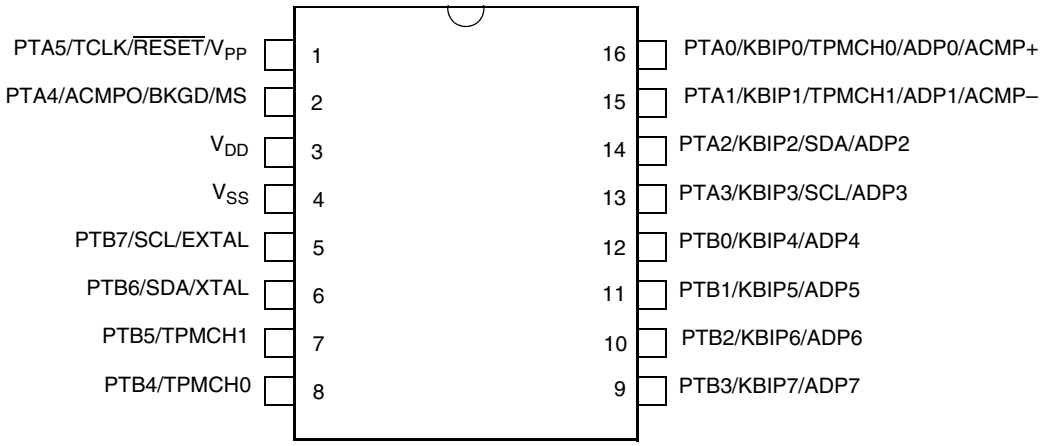

Figure 3. MC9RS08KA8 Series in 16-Pin PDIP/SOIC/TSSOP Package

3 Electrical Characteristics

3.1 Introduction

This chapter contains electrical and timing specifications for the MC9RS08KA8 series of microcontrollers available at the time of publication.

3.2 Parameter Classification

The electrical parameters shown in this supplement are guaranteed by various methods. To give the customer a better understanding the following classification is used and the parameters are tagged accordingly in the tables where appropriate:

Table 2. Parameter Classifications

P	Those parameters are guaranteed during production testing on each individual device.
C	Those parameters are achieved by the design characterization by measuring a statistically relevant sample size across process variations.
T	Those parameters are achieved by design characterization on a small sample size from typical devices under typical conditions unless otherwise noted. All values shown in the typical column are within this category.
D	Those parameters are derived mainly from simulations.

NOTE

The classification is shown in the column labeled “C” in the parameter tables where appropriate.

3.3 Absolute Maximum Ratings

Absolute maximum ratings are stress ratings only, and functional operation at the maxima is not guaranteed. Stress beyond the limits specified in Table 3 may affect device reliability or cause permanent damage to the device. For functional operating conditions, refer to the remaining tables in this chapter.

This device contains circuitry protecting against damage due to high static voltage or electrical fields; however, it is advised that normal precautions be taken to avoid application of any voltages higher than maximum-rated voltages to this high-impedance circuit. Reliability of operation is enhanced if unused inputs are tied to an appropriate logic voltage level (for instance, V_{SS} or V_{DD}) or the programmable pull-up resistor associated with the pin is enabled.

Table 3. Absolute Maximum Ratings

Rating	Symbol	Value	Unit
Supply voltage	V_{DD}	–0.3 to 5.8	V
Maximum current into V_{DD}	I_{DD}	120	mA
Digital input voltage	V_{In}	–0.3 to V_{DD} + 0.3	V
Instantaneous maximum current Single pin limit (applies to all port pins)[1, 2, 3]	I_D	±25	mA
Storage temperature range	T_{stg}	–55 to 150	°C

1 Input must be current limited to the value specified. To determine the value of the required current-limiting resistor, calculate resistance values for positive (V_{DD}) and negative (V_{SS}) clamp voltages, then use the larger of the two resistance values.

2 All functional non-supply pins are internally clamped to V_{SS} and V_{DD} except the $\overline{\text{RESET}}/V_{PP}$ pin which is internally clamped to V_{SS} only.

3 Power supply must maintain regulation within operating V_{DD} range during instantaneous and operating maximum current conditions. If positive injection current ($V_{In} > V_{DD}$) is greater than I_{DD}, the injection current may flow out of V_{DD} and could result in external power supply going out of regulation. Ensure external V_{DD} load will shunt current greater than maximum injection current. This will be the greatest risk when the MCU is not consuming power. Examples are: if no system clock is present, or if the clock rate is very low which would reduce overall power consumption.

3.4 Thermal Characteristics

This section provides information about operating temperature range, power dissipation, and package thermal resistance. Power dissipation on I/O pins is usually small compared to the power dissipation in on-chip logic and voltage regulator circuits and it is user-determined rather than being controlled by the MCU design. In order to take $P_{I/O}$ into account in power calculations, determine the difference between actual pin voltage and V_{SS} or V_{DD} and multiply by the pin current for each I/O pin. Except in cases of unusually high pin current (heavy loads), the difference between pin voltage and V_{SS} or V_{DD} will be very small.

Table 4. Thermal Characteristics

Rating	Symbol	Value	Unit
Operating temperature range (packaged)	T_A	T_L to T_H –40 to 85	°C
Maximum junction temperature	T_{JMAX}	105	°C
Thermal resistance 16-pin PDIP	θ_{JA}	80	°C/W
Thermal resistance 16-pin SOIC	θ_{JA}	112	°C/W

Table 4. Thermal Characteristics (continued)

Rating	Symbol	Value	Unit
Thermal resistance 16-pin TSSOP	θ_{JA}	75	°C/W
Thermal resistance 20-pin PDIP	θ_{JA}	75	°C/W
Thermal resistance 20-pin SOIC	θ_{JA}	96	°C/W

The average chip-junction temperature (TJ) in °C can be obtained from:

$$T_J = T_A + (P_D \times \theta_{JA}) \quad \textit{Eqn. 1}$$

where:

T_A = Ambient temperature, °C

θ_{JA} = Package thermal resistance, junction-to-ambient, °C /W

$P_D = P_{int} + P_{I/O}$

$P_{int} = I_{DD} \times V_{DD}$, Watts chip internal power

$P_{I/O}$ = Power dissipation on input and output pins user determined

For most applications, $P_{I/O} << P_{int}$ and can be neglected. An approximate relationship between PD and TJ (if $P_{I/O}$ is neglected) is:

$$P_D = K \div (T_J + 273°C) \quad \textit{Eqn. 2}$$

Solving Equation 1 and Equation 2 for K gives:

$$K = P_D \times (T_A + 273°C) + \theta_{JA} \times (PD)^2 \quad \textit{Eqn. 3}$$

where K is a constant pertaining to the particular part. K can be determined from Equation 3 by measuring P_D (at equilibrium) for a known T_A. Using this value of K, the values of P_D and T_J can be obtained by solving equations 1 and 2 iteratively for any value of T_A.

3.5 ESD Protection and Latch-Up Immunity

Although damage from electrostatic discharge (ESD) is much less common on these devices than on early CMOS circuits, normal handling precautions must be used to avoid exposure to static discharge. Qualification tests are performed to ensure that these devices can withstand exposure to reasonable levels of static without suffering any permanent damage.

All ESD testing is in conformity with AEC-Q100 Stress Test Qualification for Automotive Grade Integrated Circuits. During the device qualification ESD stresses were performed for the human body model (HBM), the machine model (MM) and the charge device model (CDM).

A device is defined as a failure if after exposure to ESD pulses the device no longer meets the device specification. Complete DC parametric and functional testing is performed per the applicable device specification at room temperature followed by hot temperature, unless specified otherwise in the device specification.

Table 5. ESD and Latch-up Test Conditions

Model	Description	Symbol	Value	Unit
Human Body	Series resistance	R1	1500	Ω
	Storage capacitance	C	100	pF
	Number of pulses per pin	—	3	—
Machine	Series resistance	R1	0	Ω
	Storage capacitance	C	200	pF
	Number of pulses per pin	—	3	—
Latch-up	Minimum input voltage limit	—	–2.5	V
	Maximum input voltage limit	—	7.5	V

Table 6. ESD and Latch-Up Protection Characteristics

No.	Rating[1]	Symbol	Min	Max	Unit
1	Human body model (HBM)	V_{HBM}	±2000	—	V
2	Machine model (MM)	V_{MM}	±200	—	V
3	Charge device model (CDM)	V_{CDM}	±500	—	V
4	Latch-up current at T_A = 85°C (applies to all pins except pin 9 PTC3/ADP11)	I_{LAT}	±100[2]	—	mA
	Latch-up current at T_A = 85°C (applies to pin 9 PTC3/ADP11)	I_{LAT}	±75[3]	—	mA

1 Parameter is achieved by design characterization on a small sample size from typical devices under typical conditions unless otherwise noted.

2 These pins meet JESD78A Class II (section 1.2) Level A (section 1.3) requirement of ±100mA.

3 This pin meets JESD78A Class II (section 1.2) Level B (section 1.3) characterization to ±75mA. This pin is only present on 20 pin package types.

3.6 DC Characteristics

This section includes information about power supply requirements, I/O pin characteristics, and power supply current in various operating modes.

Table 7. DC Characteristics (Temperature Range = –40 to 85°C Ambient)

Parameter	Symbol	Min	Typical	Max	Unit
Supply voltage (run, wait and stop modes.) 0 < f_{Bus} <10MHz V_{DD} rising V_{DD} falling	V_{DD}	2.0 1.8	—	5.5	V
Minimum RAM retention supply voltage applied to V_{DD}	V_{RAM}	0.8[1]	—	—	V
Low-voltage Detection threshold (V_{DD} falling) (V_{DD} rising)	V_{LVD}	1.80 1.88	1.86 1.94	1.95 2.03	V
Power on RESET (POR) voltage	V_{POR}[1]	0.9	—	1.7	V

Table 7. DC Characteristics (Temperature Range = –40 to 85°C Ambient) (continued)

Parameter	Symbol	Min	Typical	Max	Unit
Input high voltage (V_{DD} > 2.3V) (all digital inputs)	V_{IH}	0.70 × V_{DD}	—	—	V
Input high voltage (1.8 V ≤ V_{DD} ≤ 2.3 V) (all digital inputs)	V_{IH}	0.85 × V_{DD}	—	—	V
Input low voltage (V_{DD} > 2.3 V) (all digital inputs)	V_{IL}	—	—	0.30 × V_{DD}	V
Input low voltage (1.8 V ≤ V_{DD} ≤ 2.3 V) (all digital inputs)	V_{IL}	—	—	0.30 × V_{DD}	V
Input hysteresis (all digital inputs)	V_{hys}[1]	0.06 × V_{DD}	—	—	V
Input leakage current (per pin) V_{In} = V_{DD} or V_{SS}, all input only pins	|I_{In}|	—	0.025	1.0	μA
High impedance (off-state) leakage current (per pin) V_{In} = V_{DD} or V_{SS}, all input/output	|I_{OZ}|	—	0.025	1.0	μA
Internal pullup resistors[2](all port pins)	R_{PU}	20	45	65	kΩ
Internal pulldown resistors[2](all port pins except PTA5)	R_{PD}	20	45	65	kΩ
PTA5 Internal pulldown resistor	—	45	—	95	kΩ
Output high voltage — Low Drive (PTxDSn = 0) 5 V, I_{Load} = 2 mA 3 V, I_{Load} = 1 mA 1.8 V, I_{Load} = 0.5 mA	V_{OH}	V_{DD} – 0.8	— — —	— — —	V
Output high voltage — High Drive (PTxDSn = 1) 5 V, I_{Load} = 10 mA 5 V, I_{Load} = 5 mA 3 V, I_{Load} = 3 mA 1.8 V, I_{Load} = 2 mA		V_{DD} – 0.8	— — — —	— — — —	
Maximum total I_{OH} for all port pins	|I_{OHT}|	—	—	40	mA
Output low voltage — Low Drive (PTxDSn = 0) 5 V, I_{Load} = 2 mA 3 V, I_{Load} = 1 mA 1.8 V, I_{Load} = 0.5 mA	V_{OL}	— — —	— — —	0.8	V
Output low voltage — High Drive (PTxDSn = 1) 5 V, I_{Load} = 10 mA 5 V, I_{Load} = 5 mA 3 V, I_{Load} = 3 mA 1.8 V, I_{Load} = 2 mA		— — — —	— — — —	0.8	
Maximum total I_{OL} for all port pins	I_{OLT}	—	—	40	mA
DC injection current[3, 4, 5, 6] V_{In} < V_{SS}, V_{In} > V_{DD} Single pin limit Total MCU limit, includes sum of all stressed pins		— —	— —	0.2 0.8	mA
Input capacitance (all non-supply pins)	C_{In}	—	—	7	pF

1 This parameter is characterized and not tested on each device.

2 Measurement condition for pull resistors: V_{In} = V_{SS} for pullup and V_{In} = V_{DD} for pulldown.

3 All functional non-supply pins are internally clamped to V_{SS} and V_{DD} except the $\overline{\text{RESET}}$/V_{PP} which is internally clamped to V_{SS} only.

4 Input must be current limited to the value specified. To determine the value of the required current-limiting resistor, calculate resistance values for positive and negative clamp voltages, then use the larger of the two values.

5 Input must be current limited to the value specified. To determine the value of the required current-limiting resistor, calculate resistance values for positive and negative clamp voltages, then use the larger of the two values.

6 This parameter is characterized and not tested on each device.

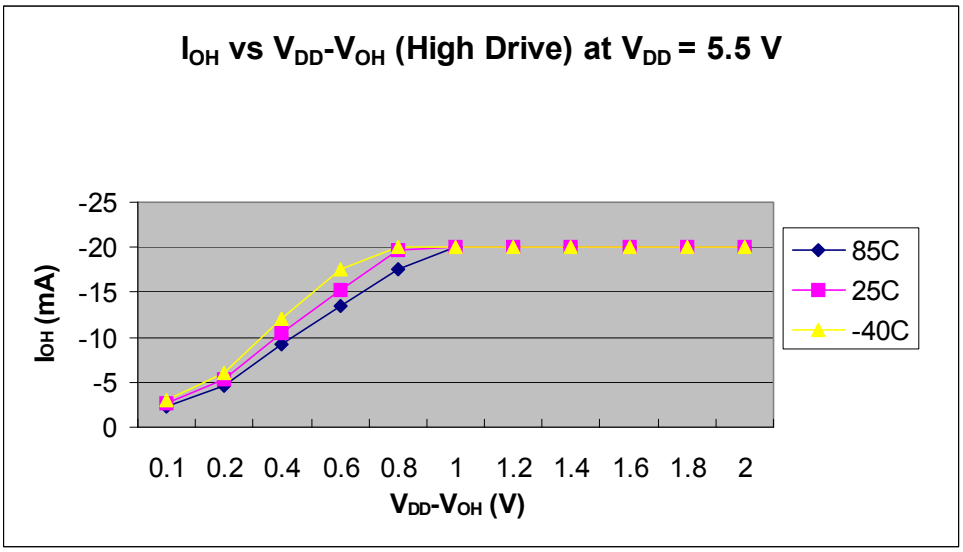

Figure 4. Typical I_{OH} vs. V_{DD}–V_{OH} V_{DD} = 5.5 V (High Drive)

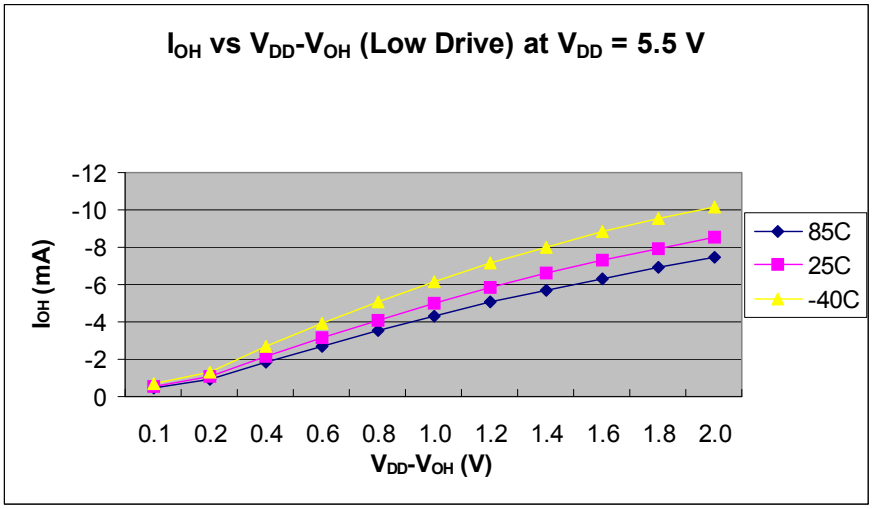

Figure 5. Typical I_{OH} vs. V_{DD}–V_{OH} V_{DD} = 5.5 V (Low Drive)

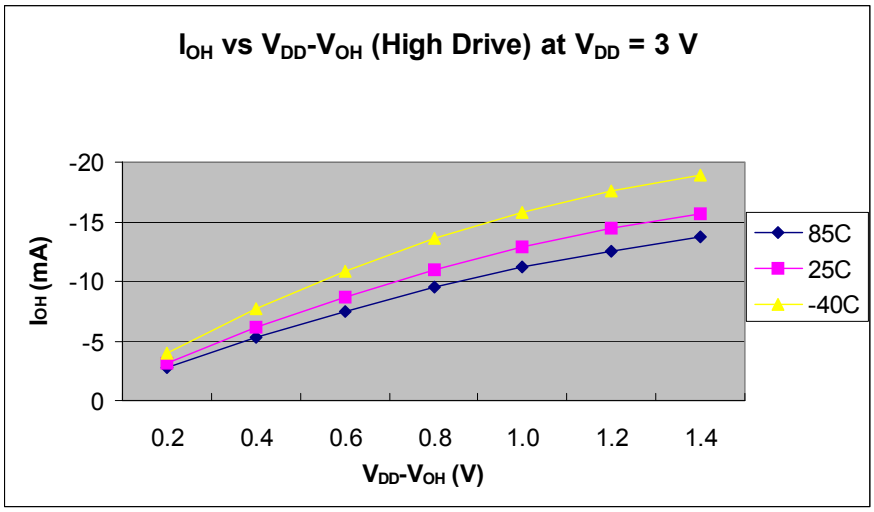

Figure 6. Typical I_{OH} vs. V_{DD}–V_{OH} V_{DD} = 3 V (High Drive)

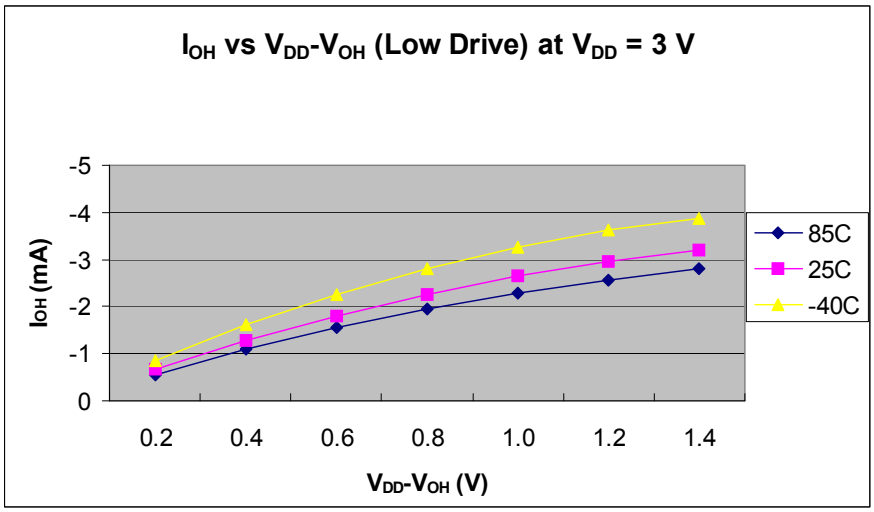

Figure 7. Typical I_{OH} vs. V_{DD}–V_{OH} V_{DD} = 3 V (Low Drive)

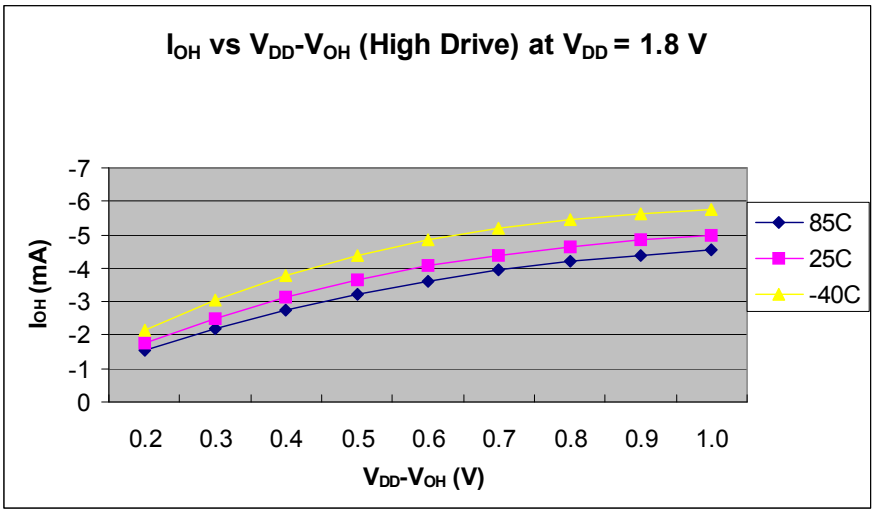

Figure 8. Typical I_{OH} vs. V_{DD}–V_{OH} V_{DD} = 1.8 V (High Drive)

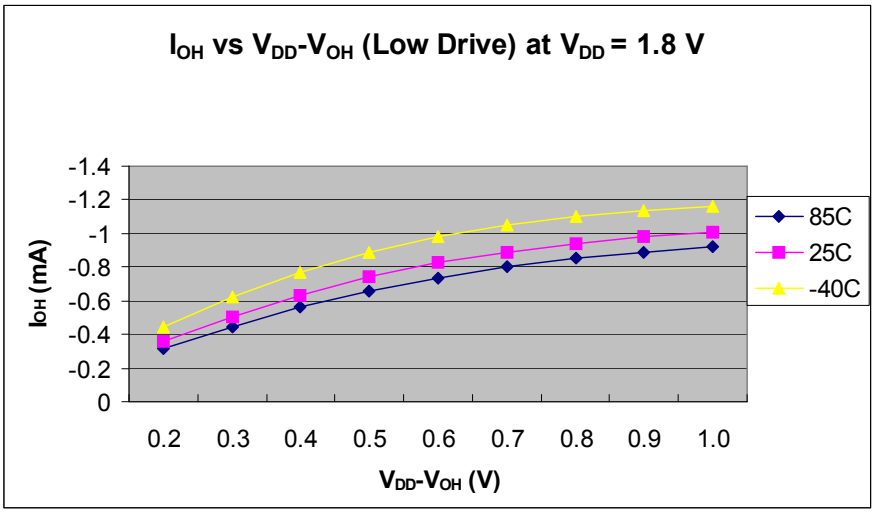

Figure 9. Typical I_{OH} vs. V_{DD}–V_{OH} V_{DD} = 1.8 V (Low Drive)

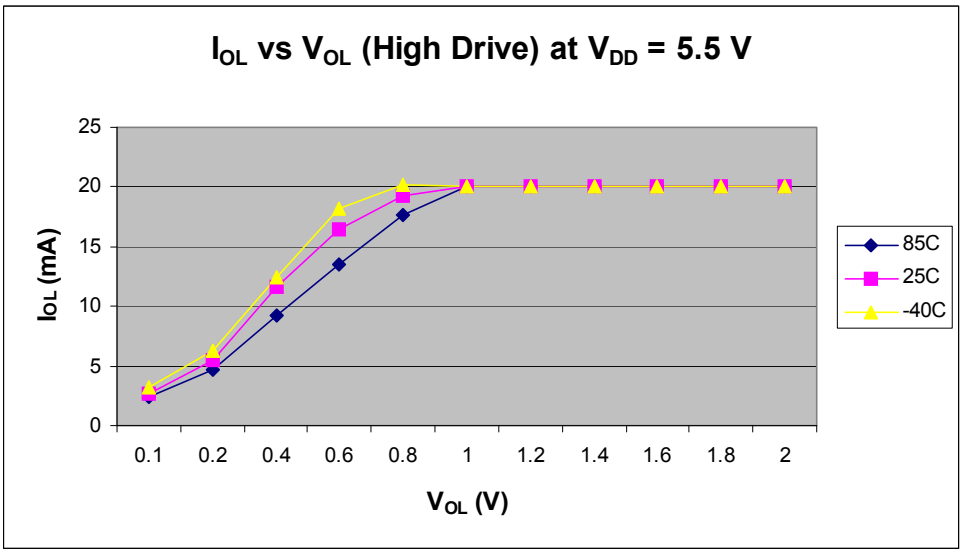

Figure 10. Typical I_{OL} vs. V_{DD}–V_{OL} V_{DD} = 5.5 V (High Drive)

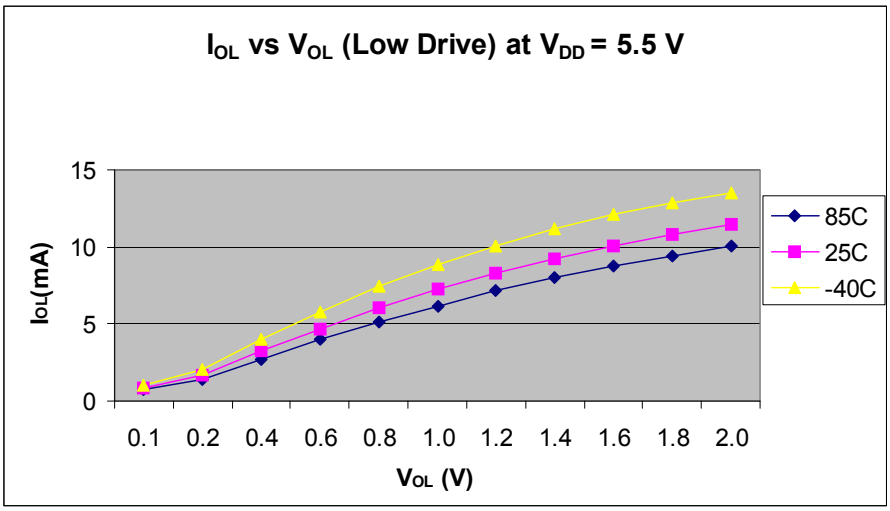

Figure 11. Typical I_{OL} vs. V_{DD}–V_{OL} V_{DD} = 5.5 V (Low Drive)

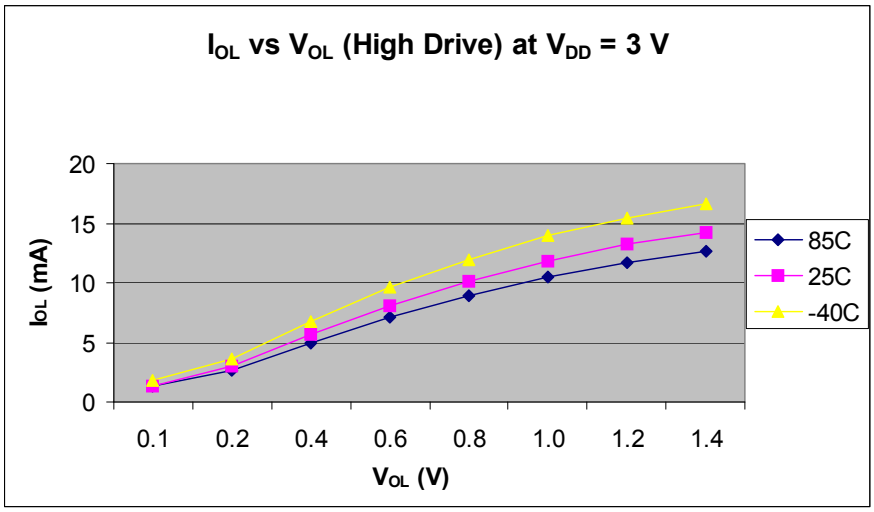

Figure 12. Typical I_{OL} vs. V_{DD}–V_{OL} V_{DD} = 3 V (High Drive)

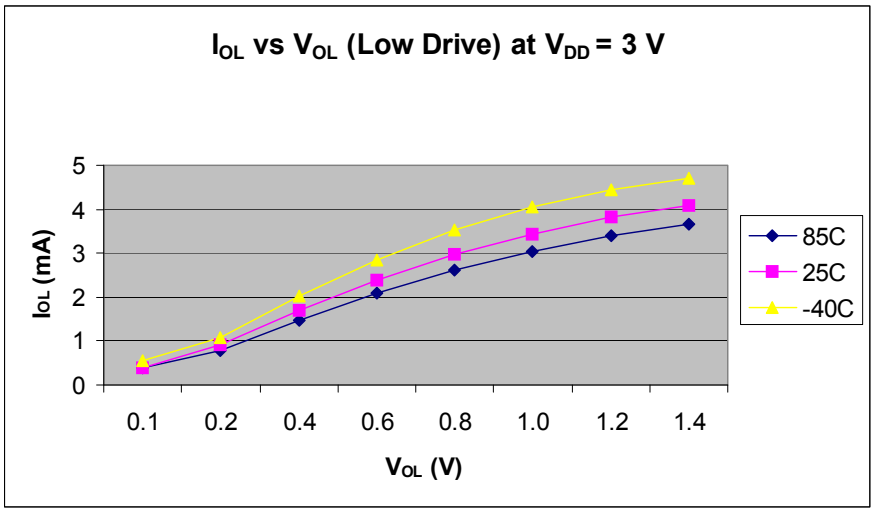

Figure 13. Typical I_{OL} vs. V_{DD}–V_{OL} V_{DD} = 3 V (Low Drive)

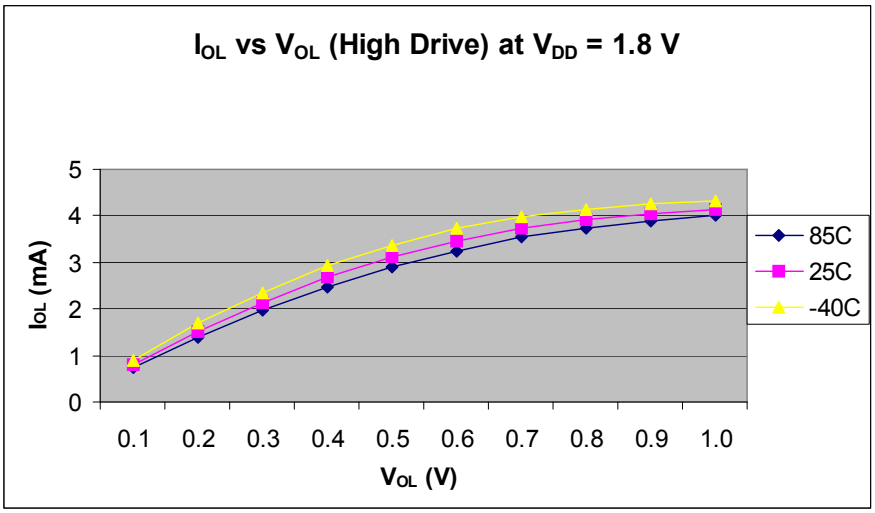

Figure 14. Typical I_{OL} vs. V_{DD}–V_{OL} V_{DD} = 1.8 V (High Drive)

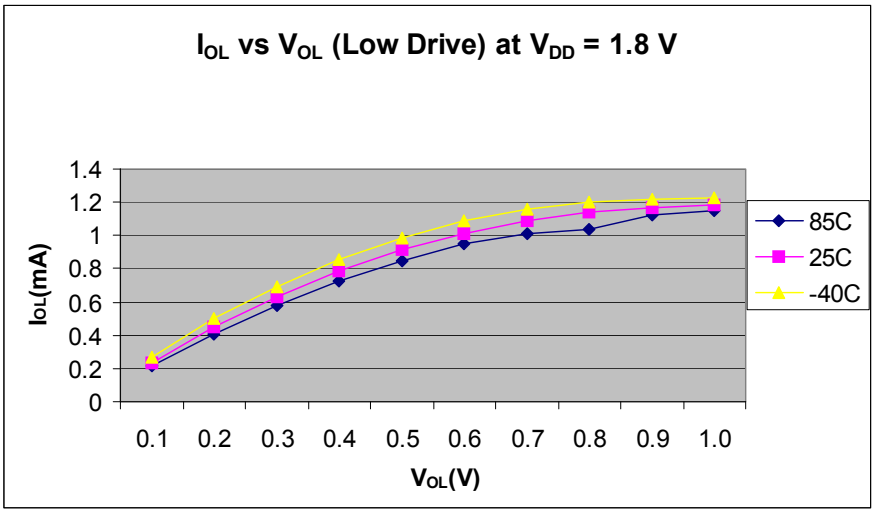

Figure 15. Typical I_{OL} vs. V_{DD}–V_{OL} V_{DD} = 1.8 V (Low Drive)

3.7 Supply Current Characteristics

Table 8. Supply Current Characteristics

Parameter	Symbol	V_{DD} (V)	Typical[1]	Max[2]	Temp. (°C)
Run supply current[3] measured at (f_{Bus} = 10 MHz)	RI_{DD10}	5	2.4 mA	5 mA	25 85
		3	2.4 mA	—	25 85
		1.80	1.7 mA	—	25 85

Table 8. Supply Current Characteristics (continued)

Parameter	Symbol	V_{DD} (V)	Typical[1]	Max[2]	Temp. (°C)
Run supply current[3] measured at (f_{Bus} = 1.25 MHz)	RI_{DD1}	5	0.42 mA	2 mA	25 85
		3	0.42 mA	—	25 85
		1.80	0.3 mA	—	25 85
Stop mode supply current	SI_{DD}	5	2.4 µA	5 µA 8 µA	25 85
		3	2 µA	—	25 85
		1.80	1.5 µA	—	25 85
ADC adder from stop[4]	—	5	128 µA	150 µA 165 µA	25 85
		3	121 µA	—	25 85
		1.80	79 µA	—	25 85
ACMP adder from stop (ACME = 1)	—	5	21 µA	22 µA	25 85
		3	18.5 µA	—	25 85
		1.80	17.5 µA	—	25 85
RTI adder from stop with 1 kHz clock source enabled[5]	—	5	2.4 µA	2 µA	25 85
		3	1.9 µA	—	25 85
		1.80	1.5 µA	—	25 85
RTI adder from stop with 1 MHz external clock source reference enabled	—	5	2.1 µA	2 µA	25 85
		3	1.6 µA	—	25 85
		1.80	1.2 µA	—	25 85
LVI adder from stop (LVDE=1 and LVDSE=1)	—	5	70 µA	80 µA	25 85
		3	65 µA	—	25 85
		1.80	60 µA	—	25 85

1 Typicals are measured at 25°C.

2 Maximum value is measured at the nominal V_{DD} voltage times 10% tolerance. Values given here are preliminary estimates prior to completing characterization.

3 Not include any DC loads on port pins.

4 Required asynchronous ADC clock and LVD to be enabled.

5 Most customers are expected to find that auto-wakeup from stop can be used instead of the higher current wait mode. Wait mode typical is 1.3 mA at 3 V and 1 mA at 2 V with f_{Bus} = 1 MHz.

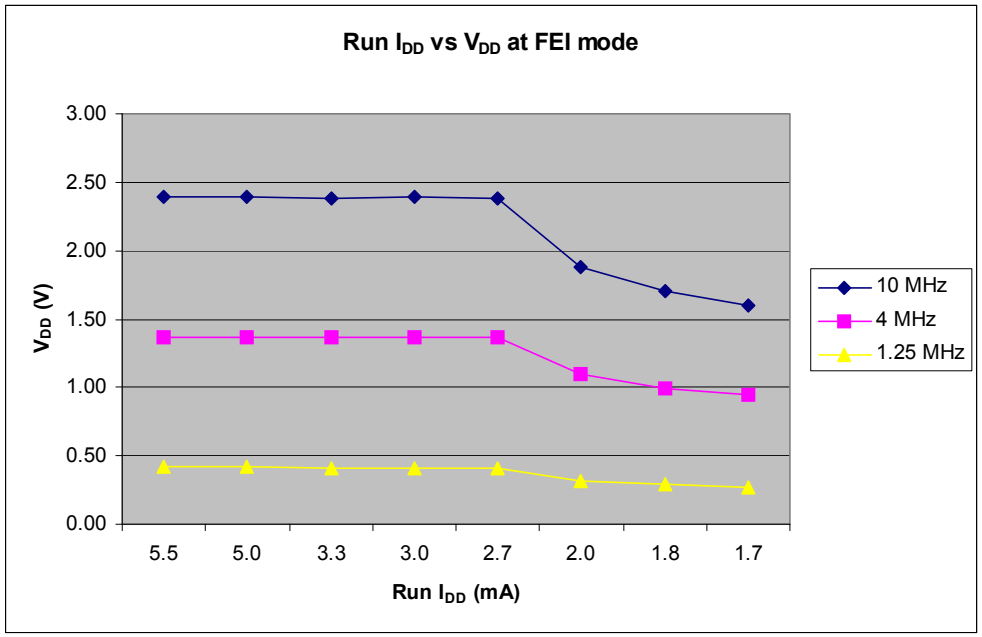

Figure 16. Typical Run I_{DD} vs. V_{DD} for FEI Mode

3.8 External Oscillator (XOSC) Characteristics

Table 9. Oscillator Electrical Specifications (Temperature Range = –40 to 125°C Ambient)

Num	C	Rating	Symbol	Min	Typical[1]	Max	Unit
1	C	Oscillator crystal or resonator (EREFS = 1, ERCLKEN = 1) Low range (RANGE = 0) High range (RANGE = 1) FEE or FBE mode [2] High range (RANGE = 1, HGO = 1) FBELP mode High range (RANGE = 1, HGO = 0) FBELP mode	 f_{lo} f_{hi} f_{hi-hgo} f_{hi-lp}	 32 1 1 1	 — — — —	 38.4 5 16 8	 kHz MHz MHz MHz
2	D	Load capacitors	C_1, C_2	See crystal or resonator manufacturer's recommendation.			
3	D	Feedback resistor Low range (32 kHz to 100 kHz) High range (1 MHz to 16 MHz)	R_F	 — —	 10 1	 — —	 MΩ
4	D	Series resistor Low range, low gain (RANGE = 0, HGO = 0) Low range, high gain (RANGE = 0, HGO = 1) High range, low gain (RANGE = 1, HGO = 0) High range, high gain (RANGE = 1, HGO = 1) ≥ 8 MHz 4 MHz 1 MHz	R_S	 — — — — — —	 0 100 0 0 0 0	 — — — 0 10 20	 kΩ
5	C	Crystal start-up time [3] Low range, low gain (RANGE = 0, HGO = 0) Low range, high gain (RANGE = 0, HGO = 1) High range, low gain (RANGE = 1, HGO = 0)[4] High range, high gain (RANGE = 1, HGO = 1)[4]	 $t_{CSTL-LP}$ $t_{CSTL-HGO}$ $t_{CSTH-LP}$ $t_{CSTH-HGO}$	 — — — —	 200 400 5 20	 — — — —	 ms
6	D	Square wave input clock frequency (EREFS = 0, ERCLKEN = 1) FEE or FBE mode [2] FBELP mode	f_{extal}	0.03125 0	—	5 40	MHz

1 Typical data was characterized at 5.0 V, 25 °C or is recommended value.

2 The input clock source must be divided using RDIV to within the range of 31.25 kHz to 39.0625 kHz.

3 This parameter is characterized and not tested on each device. Proper PC board layout procedures must be followed to achieve specifications.

4 4 MHz crystal.

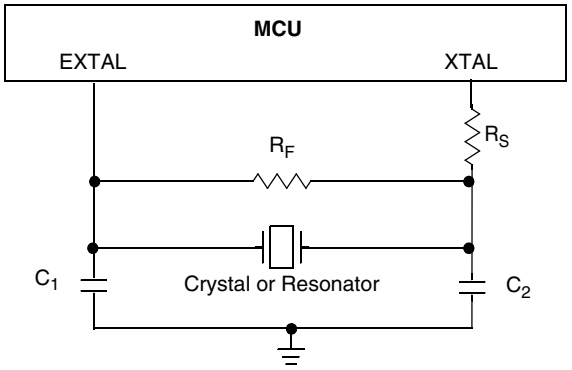

3.9 AC Characteristics

This section describes AC timing characteristics for each peripheral system.

3.9.1 Control Timing

Table 10. Control Timing

Num	C	Parameter	Symbol	Min	Typical	Max	Unit
1	D	Bus frequency ($t_{cyc} = 1/f_{Bus}$)	f_{Bus}	0	—	10	MHz
2	D	Real time interrupt internal oscillator period	t_{RTI}	700	1000	1300	µs
3	D	External $\overline{\text{RESET}}$ pulse width[1]	t_{extrst}	150	—	—	ns
4	D	KBI pulse width[2]	t_{KBIPW}	1.5 t_{cyc}	—	—	ns
5	D	KBI pulse width in stop[1]	t_{KBIPWS}	100	—	—	ns
6	D	Port rise and fall time (load = 50 pF)[3] Slew rate control disabled (PTxSE = 0) Slew rate control enabled (PTxSE = 1)	t_{Rise}, t_{Fall}	— —	11 35	— —	ns

1 This is the shortest pulse guaranteed to pass through the pin input filter circuitry. Shorter pulses may or may not be recognized.

2 This is the minimum pulse width that is guaranteed to pass through the pin synchronization circuitry. Shorter pulses may or may not be recognized. In stop mode, the synchronizer is bypassed so shorter pulses can be recognized in that case.

3 Timing is shown with respect to 20% V_{DD} and 80% V_{DD} levels. Temperature range –40°C to 85°C.

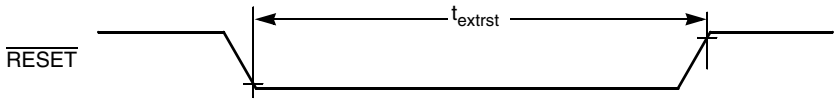

Figure 17. Reset Timing

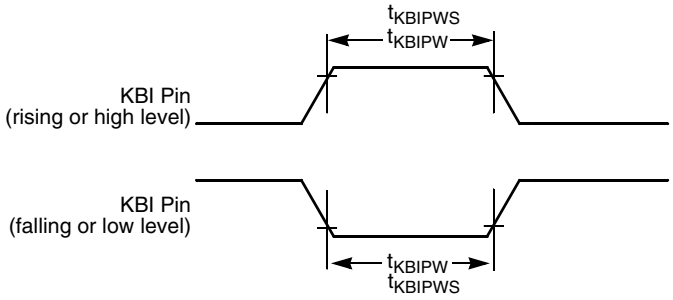

Figure 18. KBI Pulse Width

3.9.2 TPM/MTIM Module Timing

Synchronizer circuits determine the shortest input pulses that can be recognized or the fastest clock that can be used as the optional external source to the timer counter. These synchronizers operate from the current bus rate clock.

Table 11. TPM Input Timing

Num	C	Rating	Symbol	Min	Max	Unit
1	D	External clock frequency	f_{TPMext}	DC	$f_{Bus}/4$	MHz
2	D	External clock period	t_{TPMext}	4	—	t_{cyc}
3	D	External clock high time	t_{clkh}	1.5	—	t_{cyc}
4	D	External clock low time	t_{clkl}	1.5	—	t_{cyc}
5	D	Input capture pulse width	t_{ICPW}	1.5	—	t_{cyc}

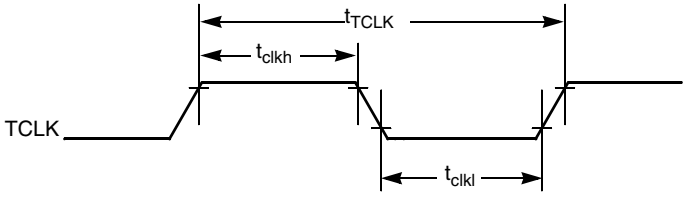

Figure 19. Timer External Clock

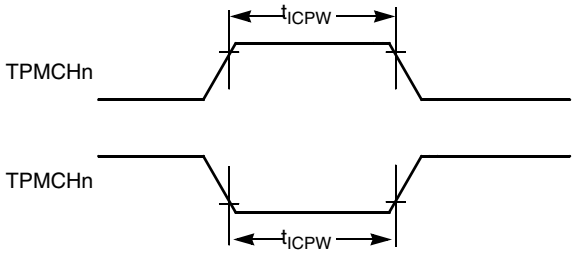

Figure 20. Timer Input Capture Pulse

3.10 Analog Comparator (ACMP) Electrical

Table 12. Analog Comparator Electrical Specifications

Num	C	Characteristic	Symbol	Min	Typical	Max	Unit
1	D	Supply voltage	V_{DD}	1.80	—	5.5	V
2	P	Supply current (active)	I_{DDAC}	—	20	35	μA
3	D	Analog input voltage[1]	V_{AIN}	V_{SS} – 0.3	—	V_{DD}	V
4	P	Analog input offset voltage[1]	V_{AIO}	—	20	40	mV
5	C	Analog Comparator hysteresis[1]	V_H	3.0	9.0	15.0	mV
6	C	Analog source impedance[1]	R_{AS}	—	—	10	kΩ
7	P	Analog input leakage current	I_{ALKG}	—	—	1.0	μA
8	C	Analog Comparator initialization delay	t_{AINIT}	—	—	1.0	μs

Table 12. Analog Comparator Electrical Specifications (continued)

Num	C	Characteristic	Symbol	Min	Typical	Max	Unit
9	P	Analog Comparator bandgap reference voltage	V_{BG}	1.1	1.208	1.3	V

1 These data are characterized but not production tested.

3.11 Internal Clock Source Characteristics

Table 13. Internal Clock Source Specifications

Num	C	Characteristic	Symbol	Min	Typical[1]	Max	Unit
1	C	Average internal reference frequency — untrimmed	f_{int_ut}	25	31.25	41.66	kHz
2	P	Average internal reference frequency — trimmed	f_{int_t}	31.25	39.06	39.0625	kHz
3	C	DCO output frequency range — untrimmed	f_{dco_ut}	12.8	16	21.33	MHz
4	P	DCO output frequency range — trimmed	f_{dco_t}	16	20	20	MHz
5	C	Resolution of trimmed DCO output frequency at fixed voltage and temperature	$\Delta f_{dco_res_t}$	—	—	0.2	$\%f_{dco}$
6	C	Total deviation of trimmed DCO output frequency over voltage and temperature	Δf_{dco_t}	—	—	2	$\%f_{dco}$
7	C	FLL acquisition time[2,3]	$t_{acquire}$	—	—	1	ms
8	C	Stop recovery time (FLL wakeup to previous acquired frequency) IREFSTEN = 0 IREFSTEN = 1	t_wakeup	—	 100 86	—	µs

1 Data in typical column was characterized at 3.0 V and 5.0 V, 25 °C or is typical recommended value.

2 This parameter is characterized and not tested on each device.

3 This specification applies to any time the FLL reference source or reference divider is changed, trim value changed or changing from FLL disabled (FBILP) to FLL enabled (FEI, FBI).

3.12 ADC Characteristics

Table 14. 5 Volt 10-bit ADC Operating Conditions

C	Characteristic	Conditions	Symb	Min.	Typical	Max.	Unit
D	Input voltage	—	V_{ADIN}	V_{SS}	—	V_{DD}	V
C	Accuracy	V_{DD} = 2 V	—	—	8 bit	—	—
C	Input capacitance	—	C_{ADIN}	—	4.5	5.5	pF
C	Input resistance	—	R_{ADIN}	—	3	5	kΩ
C	Analog source resistance external to MCU	10 bit mode f_{ADCK} > 4MHz f_{ADCK} < 4MHz	R_{AS}	 — —	 — —	 5 10	kΩ
		8 bit mode (all valid f_{ADCK})		—	—	10	

Table 14. 5 Volt 10-bit ADC Operating Conditions (continued)

C	Characteristic	Conditions	Symb	Min.	Typical	Max.	Unit
D	ADC conversion clock frequency	High Speed (ADLPC=0)	f_{ADCK}	0.4	—	8.0	MHz
		Low Power (ADLPC=1)		0.4	—	8.0	

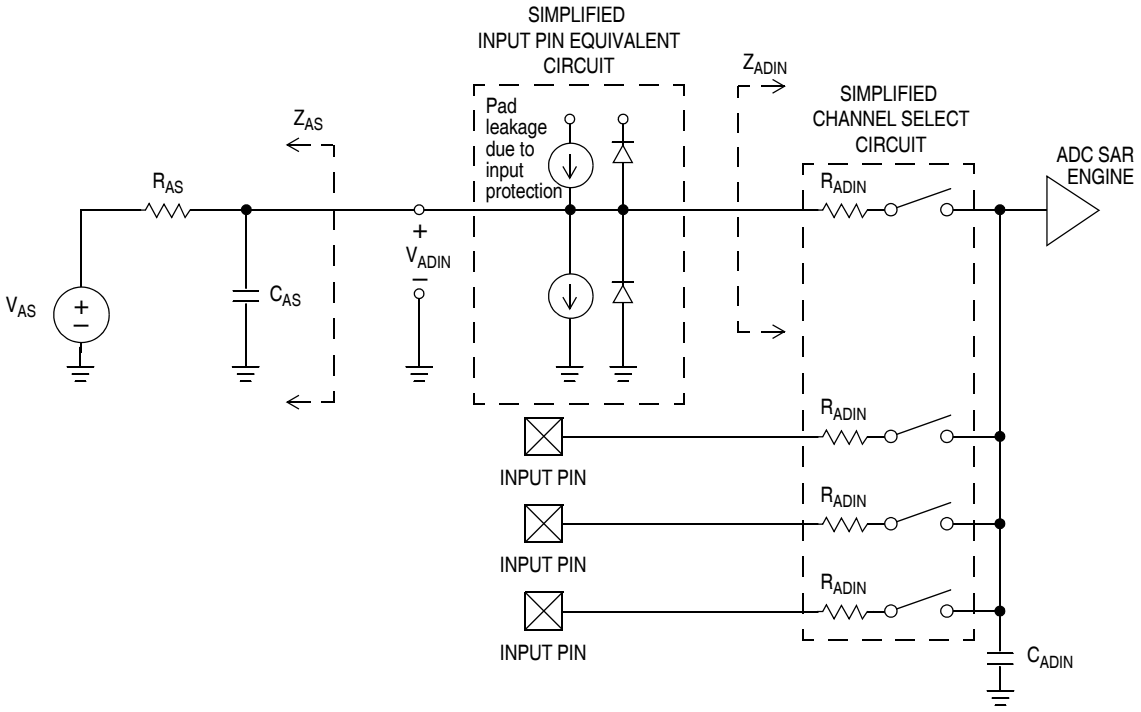

Figure 21. ADC Input Impedance Equivalency Diagram

Table 15. 10-bit ADC Characteristics

Characteristic	Conditions	C	Symb	Min	Typical[1]	Max	Unit
Supply current ADLPC = 1 ADLSMP = 1 ADCO = 1	—	T	I_{DDAD}	—	133	—	μA
Supply current ADLPC = 1 ADLSMP = 0 ADCO = 1	—	T	I_{DDAD}	—	218	—	μA
Supply current ADLPC = 0 ADLSMP = 1 ADCO = 1	—	T	I_{DDAD}	—	327	—	μA
Supply current ADLPC = 0 ADLSMP = 0 ADCO = 1	—	C	I_{DDAD}	—	0.582	1	mA

Table 15. 10-bit ADC Characteristics (continued)

Characteristic	Conditions	C	Symb	Min	Typical[1]	Max	Unit
Supply current	Stop, reset, module off	T	I_{DDAD}	—	0.011	1	μA
ADC asynchronous clock source	High speed (ADLPC = 0)	T	f_{ADACK}	—	3.3	—	MHz
	Low power (ADLPC = 1)			—	2	—	
Conversion time (including sample time)	Short sample (ADLSMP=0)	P	t_{ADC}	—	20	—	ADCK cycles
	Long sample (ADLSMP=1)			—	40	—	
Sample time	Short sample (ADLSMP=0)	P	t_{ADS}	—	3.5	—	ADCK cycles
	Long sample (ADLSMP=1)			—	23.5	—	
Total unadjusted error	10 bit mode	C	E_{TUE}	—	±1	±2.5	LSB[2]
	8 bit mode			—	±0.5	±1.0	
Differential non-linearity	10 bit mode	P	DNL	—	±0.5	±1.0	LSB[2]
	8 bit mode	T		—	±0.3	±0.5	
	Monotonicity and No-Missing-Codes guaranteed						
Integral non-linearity	10 bit mode	C	INL	—	±0.5	±1.0	LSB[2]
	8 bit mode			—	±0.3	±0.5	
Zero-scale error	10 bit mode	P	E_{ZS}	—	±0.5	±1.5	LSB[2]
	8 bit mode	T		—	±0.5	±0.5	
Full-Scale error $V_{ADIN} = V_{DDA}$	10 bit mode	P	E_{FS}	—	±0.5	±1.5	LSB[2]
	8 bit mode	T		—	±0.5	±0.5	
Quantization error	10 bit mode	D	E_Q	—	—	±0.5	LSB[2]
	8 bit mode			—	—	±0.5	
Input leakage error pad leakage[3] * R_{AS}	10 bit mode	D	E_{IL}	—	±0.2	±2.5	LSB[2]
	8 bit mode			—	±0.1	±1	

1 Typical values assume Temp = 25 °C, f_{ADCK} = 1.0 MHz unless otherwise stated. Typical values are for reference only and are not tested in production.

2 1 LSB = $(V_{REFH} - V_{REFL})/2^N$

3 Based on input pad leakage current. Refer to pad electrical.

3.13 Flash Specifications

This section provides details about program/erase times and program-erase endurance for the flash memory. For detailed information about program/erase operations, see the reference manual.

Table 16. Flash Characteristics

Characteristic	Symbol	Min	Typical[1]	Max	Unit
Supply voltage for program/erase	V_{DD}	2.7	—	5.5	V

Table 16. Flash Characteristics (continued)

Characteristic	Symbol	Min	Typical[1]	Max	Unit
Program/Erase voltage	V_{PP}	11.8	12	12.2	V
V_{PP} current Program Mass erase	 I_{VPP_prog} I_{VPP_erase}	 — —	 — —	 200 100	 µA µA
Supply voltage for read operation 0 < f_{Bus} < 10 MHz	V_{Read}	1.8	—	5.5	V
Byte program time	t_{prog}	20	—	40	µs
Mass erase time	t_{me}	500	—	—	ms
Cumulative program HV time[2]	t_{hv}	—	—	8	ms
Total cumulative HV time (total of t_{me} & t_{hv} applied to device)	t_{hv_total}	—	—	2	hours
HVEN to program setup time	t_{pgs}	10	—	—	µs
PGM/MASS to HVEN setup time	t_{nvs}	5	—	—	µs
HVEN hold time for PGM	t_{nvh}	5	—	—	µs
HVEN hold time for MASS	t_{nvh1}	100	—	—	µs
V_{PP} to PGM/MASS setup time	t_{vps}	20	—	—	ns
HVEN to V_{PP} hold time	t_{vph}	20	—	—	ns
V_{PP} rise time[3]	t_{vrs}	200	—	—	ns
Recovery time	t_{rcv}	1	—	—	µs
Program/erase endurance T_L to T_H = –40°C to 85°C	—	1000	—	—	cycles
Data retention	t_{D_ret}	15	—	—	years

1 Typicals are measured at 25 °C.

2 t_{hv} is the cumulative high voltage programming time to the same row before next erase. Same address can not be programmed more than twice before next erase.

3 Fast V_{PP} rise time may potentially trigger the ESD protection structure, which may result in over current flowing into the pad and cause permanent damage to the pad. External filtering for the V_{PP} power source is recommended. An example V_{PP} filter is shown in Figure 22.

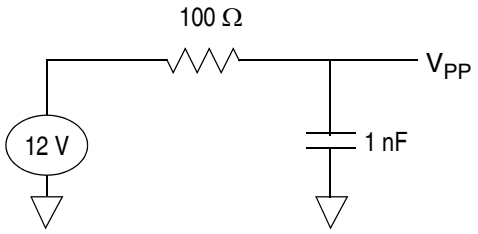

Figure 22. Example V_{PP} Filtering

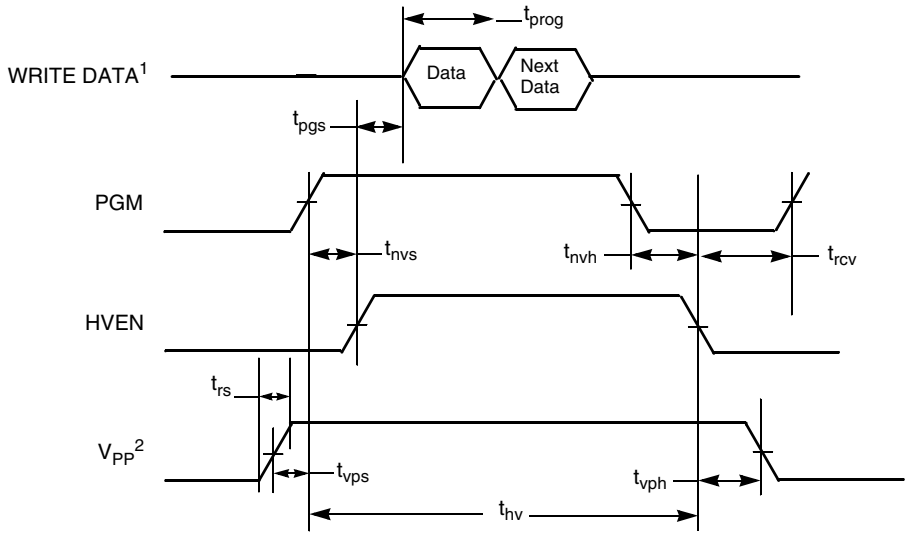

[1] Next Data applies if programming multiple bytes in a single row, refer to MC9RS08KA8 Series *Reference Manual*.
[2] V_{DD} must be at a valid operating voltage before voltage is applied or removed from the V_{PP} pin.

Figure 23. Flash Program Timing

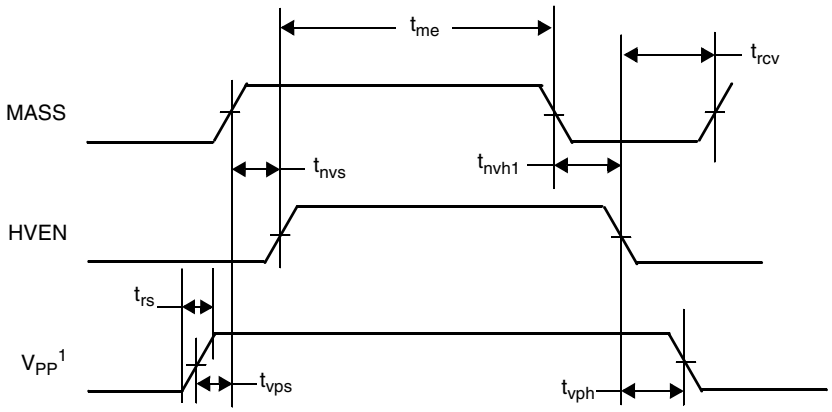

[1] V_{DD} must be at a valid operating voltage before voltage is applied or removed from the V_{PP} pin.

Figure 24. Flash Mass Erase Timing

4 Ordering Information

This section contains ordering numbers for MC9RS08KA8 series devices. See below for an example of the device numbering system.

Table 17. Device Numbering System

Device Number	Memory		Package		
	Flash	RAM	Type	Designator	Document No.
MC9RS08KA8 **MC9RS08KA4**	8K bytes 4K bytes	254 bytes 126 bytes	16 PDIP	PG	98ASB42431B
			16 W-SOIC	WG	98ASB42567B
			16 TSSOP	TG	98ASH70247A
			20 PDIP	PJ	98ASB42899B
			20 W-SOIC	WJ	98ASB42343B

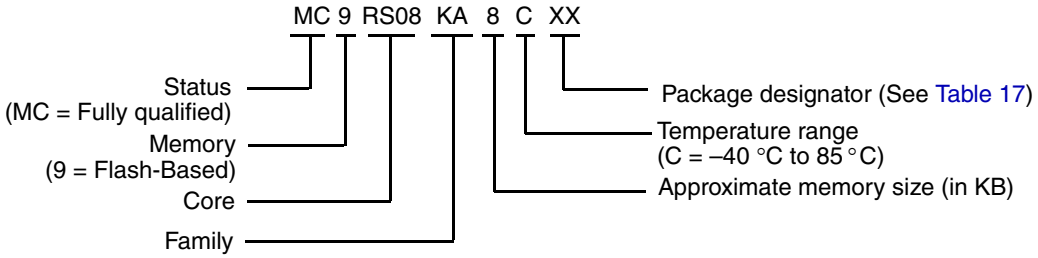

5 Mechanical Drawings

This following pages contain mechanical specifications for MC9RS08KA8 series package options.

- 16-pin PDIP (plastic dual in-line pin)
- 16-pin W-SOIC (wide body small outline integrated circuit)
- 16-pin TSSOP (thin shrink sSmall outline package)
- 20-pin PDIP (plastic dual in-line pin)
- 20-pin W-SOIC (wide body small outline integrated circuit)

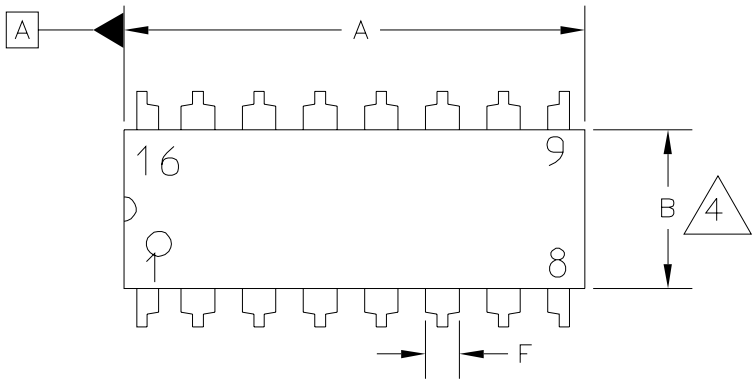

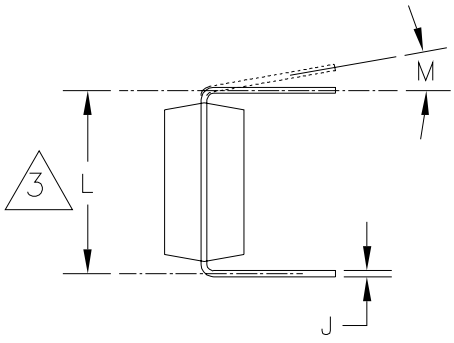

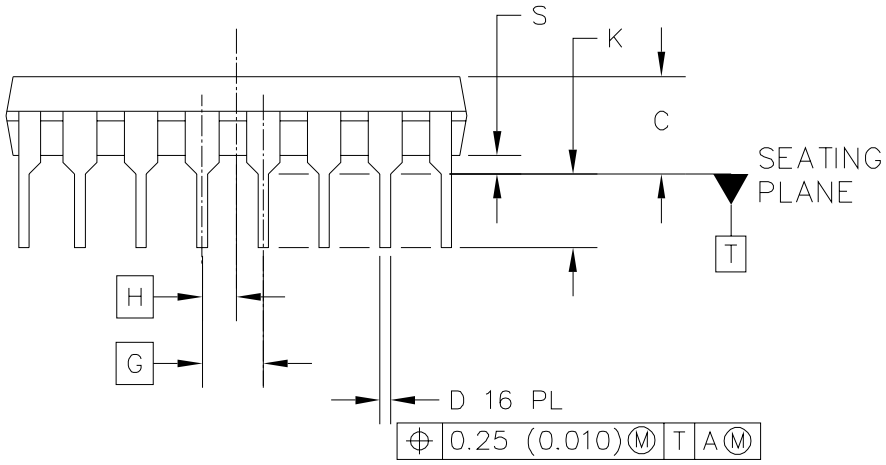

© FREESCALE SEMICONDUCTOR, INC.
ALL RIGHTS RESERVED.

MECHANICAL OUTLINE	PRINT VERSION NOT TO SCALE

TITLE:	DOCUMENT NO: 98ASB42431B	REV: T
16 LD PDIP	CASE NUMBER: 648-08	19 MAY 2005
	STANDARD: NON-JEDEC	

NOTES:

1. DIMENSIONING AND TOLERANCING PER ASME Y14.5M, 1994.
2. CONTROLLING DIMENSION: INCH.
3. DIMENSION TO CENTER OF LEADS WHEN FORMED PARALLEL.
4. DIMENSIONS DOES NOT INCLUDE MOLD FLASH.
5. ROUNDED CORNERS OPTIONAL.
6. 648-01 THRU -08 OBSOLETE, NEW STANDARD 648-09.

DIM	MILLIMETERS MIN	MILLIMETERS MAX	INCHES MIN	INCHES MAX	DIM	MILLIMETERS MIN	MILLIMETERS MAX	INCHES MIN	INCHES MAX
A	18.80	19.55	0.740	0.770					
B	6.35	6.85	0.250	0.270					
C	3.69	4.44	0.145	0.175					
D	0.39	0.53	0.015	0.021					
F	1.02	1.77	0.040	0.070					
G	2.54 BSC		0.100 BSC						
H	1.27 BSC		0.050 BSC						
J	0.21	0.38	0.008	0.015					
K	2.80	3.30	0.110	0.130					
L	7.50	7.74	0.295	0.305					
M	0°	10°	0°	10°					
S	0.51	1.01	0.020	0.040					

© FREESCALE SEMICONDUCTOR, INC.
ALL RIGHTS RESERVED.

MECHANICAL OUTLINE | PRINT VERSION NOT TO SCALE

TITLE:

16 LD PDIP

DOCUMENT NO: 98ASB42431B | REV: T

CASE NUMBER: 648-08 | 19 MAY 2005

STANDARD: NON-JEDEC

STYLE 1:

PIN	
1.	CATHODE
2.	CATHODE
3.	CATHODE
4.	CATHODE
5.	CATHODE
6.	CATHODE
7.	CATHODE
8.	CATHODE
9.	ANODE
10.	ANODE
11.	ANODE
12.	ANODE
13.	ANODE
14.	ANODE
15.	ANODE
16.	ANODE

STYLE 2:

PIN	
1.	COMMON DRAIN
2.	COMMON DRAIN
3.	COMMON DRAIN
4.	COMMON DRAIN
5.	COMMON DRAIN
6.	COMMON DRAIN
7.	COMMON DRAIN
8.	COMMON DRAIN
9.	GATE
10.	SOURCE
11.	GATE
12.	SOURCE
13.	GATE
14.	SOURCE
15.	GATE
16.	SOURCE

© FREESCALE SEMICONDUCTOR, INC.
ALL RIGHTS RESERVED.

MECHANICAL OUTLINE	PRINT VERSION NOT TO SCALE

TITLE:	DOCUMENT NO: 98ASB42431B	REV: T
16 LD PDIP	CASE NUMBER: 648-08	19 MAY 2005
	STANDARD: NON-JEDEC	

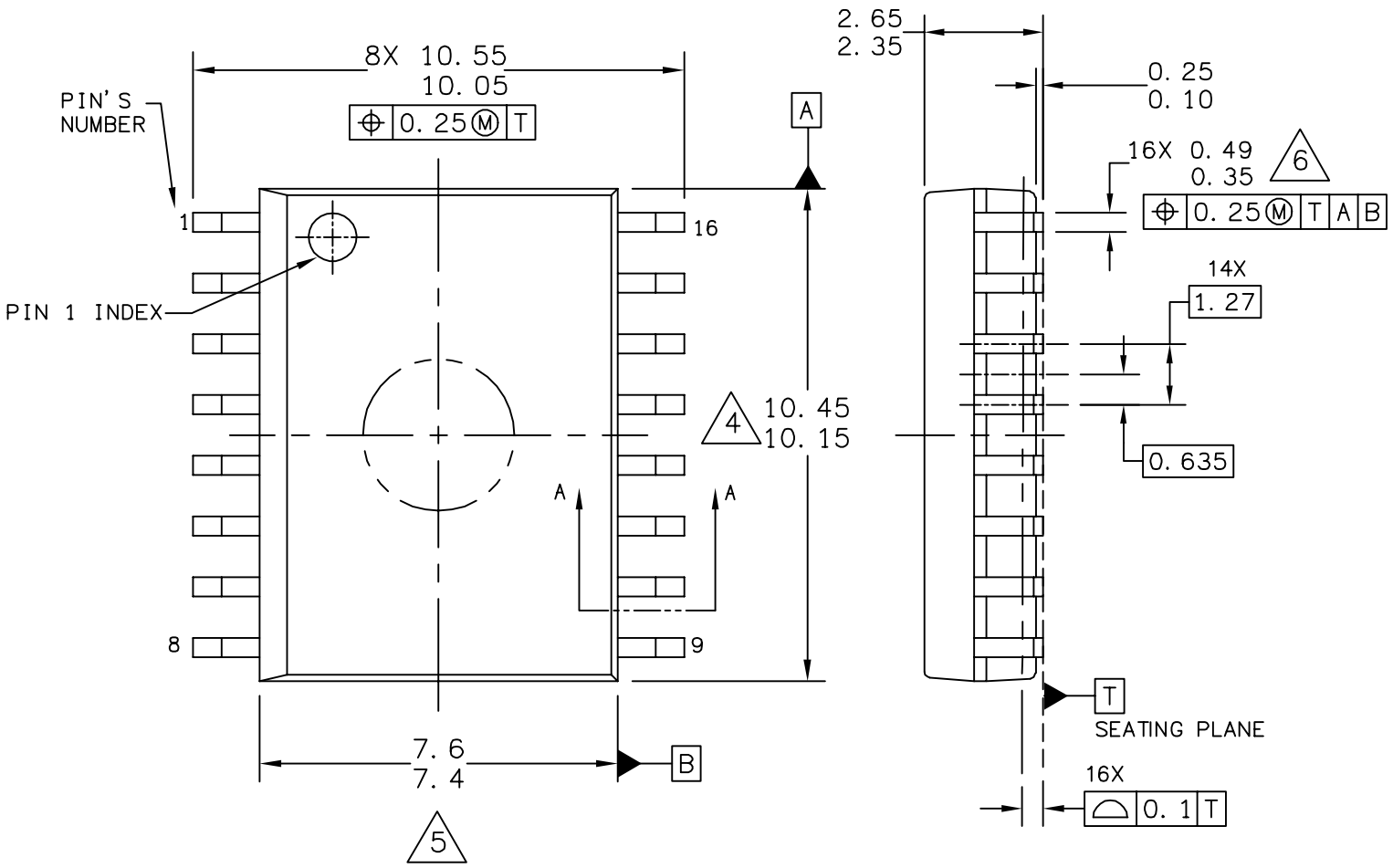

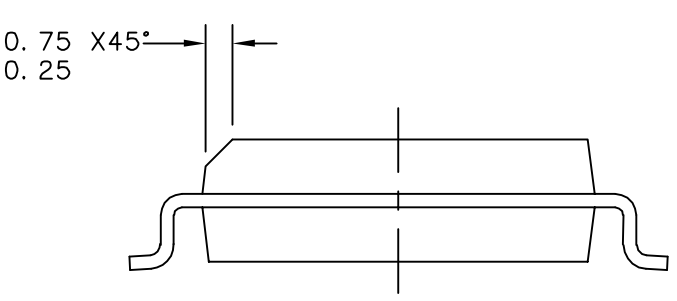

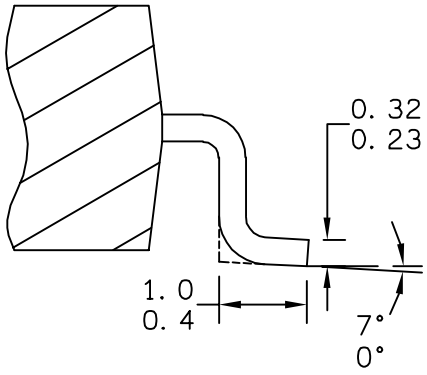

SECTION A–A

© FREESCALE SEMICONDUCTOR, INC.
ALL RIGHTS RESERVED.

MECHANICAL OUTLINE	PRINT VERSION NOT TO SCALE

TITLE: 16LD SOIC W/B, 1.27 PITCH CASE-OUTLINE	DOCUMENT NO: 98ASB42567B	REV: F
	CASE NUMBER: 751G-04	02 JUN 2005
	STANDARD: JEDEC MS-013AA	

NOTES:

1. DIMENSIONS ARE IN MILLIMETERS.

2. DIMENSIONING AND TOLERANCING PER ASME Y14.5M–1994.

3. DATUMS A AND B TO BE DETERMINED AT THE PLANE WHERE THE BOTTOM OF THE LEADS EXIT THE PLASTIC BODY.

4. THIS DIMENSION DOES NOT INCLUDE MOLD FLASH, PROTRUSION OR GATE BURRS. MOLD FLASH, PROTRUSION OR GATE BURRS SHALL NOT EXCEED 0.15 MM PER SIDE. THIS DIMENSION IS DETERMINED AT THE PLANE WHERE THE BOTTOM OF THE LEADS EXIT THE PLASTIC BODY.

5. THIS DIMENSION DOES NOT INCLUDE INTER–LEAD FLASH OR PROTRUSIONS. INTER–LEAD FLASH AND PROTRUSIONS SHALL NOT EXCEED 0.25 MM PER SIDE. THIS DIMENSION IS DETERMINED AT THE PLANE WHERE THE BOTTOM OF THE LEADS EXIT THE PLASTIC BODY.

6. THIS DIMENSION DOES NOT INCLUDE DAMBAR PROTRUSION. ALLOWABLE DAMBAR PROTRUSION SHALL NOT CAUSE THE LEAD WIDTH TO EXCEED 0.62 mm.

© FREESCALE SEMICONDUCTOR, INC.
ALL RIGHTS RESERVED.

MECHANICAL OUTLINE	PRINT VERSION NOT TO SCALE

TITLE:	DOCUMENT NO: 98ASB42567B	REV: F
16LD SOIC W/B, 1.27 PITCH, CASE OUTLINE	CASE NUMBER: 751G–04	02 JUN 2005
	STANDARD: JEDEC MS–013AA	

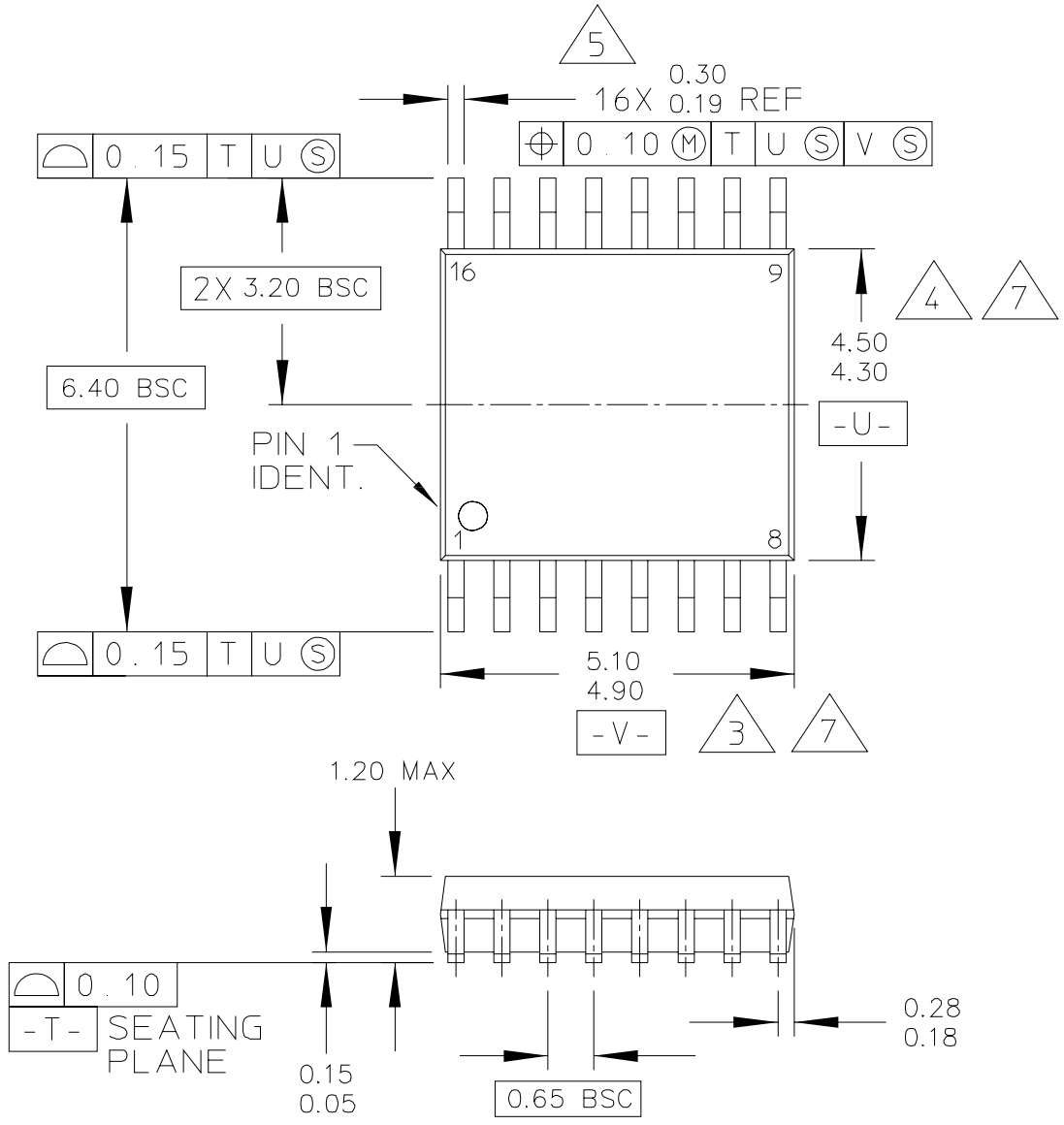

© FREESCALE SEMICONDUCTOR, INC.
ALL RIGHTS RESERVED.

MECHANICAL OUTLINE	PRINT VERSION NOT TO SCALE

TITLE:	DOCUMENT NO: 98ASH70247A	REV: B
16 LD TSSOP, PITCH 0.65MM	CASE NUMBER: 948F-01	19 MAY 2005
	STANDARD: JEDEC	

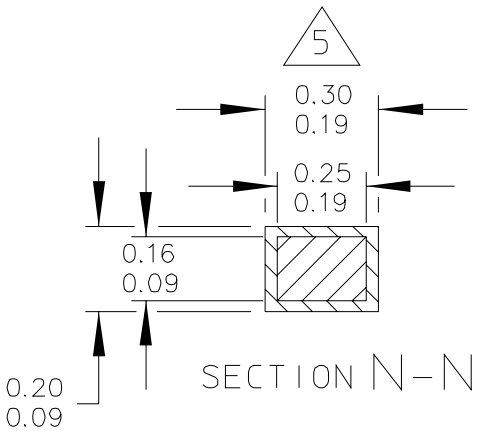

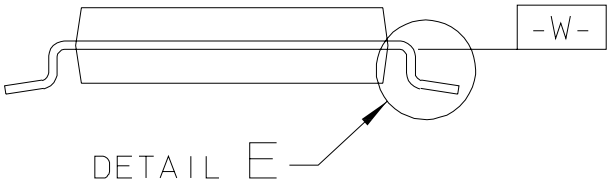

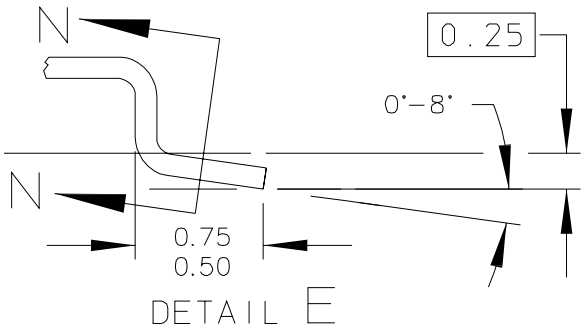

© FREESCALE SEMICONDUCTOR, INC.
ALL RIGHTS RESERVED.

	MECHANICAL OUTLINE	PRINT VERSION NOT TO SCALE
TITLE: 16 LD TSSOP, PITCH 0.65MM	DOCUMENT NO: 98ASH70247A	REV: B
	CASE NUMBER: 948F-01	19 MAY 2005
	STANDARD: JEDEC	

NOTES:

1. CONTROLLING DIMENSION: MILLIMETER

2. DIMENSIONS AND TOLERANCES PER ANSI Y14.5M-1982.

3. DIMENSION DOES NOT INCLUDE MOLD FLASH, PROTRUSIONS OR GATE BURRS. MOLD FLASH OR GATE BURRS SHALL NOT EXCEED 0.15 PER SIDE.

4. DIMENSION DOES NOT INCLUDE INTERLEAD FLASH OR PROTRUSION. INTERLEAD FLASH OR PROTRUSION SHALL NOT EXCEED 0.25 PER SIDE.

5. DIMENSION DOES NOT INCLUDE DAMBAR PROTRUSION. ALLOWABLE DAMBAR PROTRUSION SHALL BE 0.08 TOTAL IN EXCESS OF THE DIMENSION AT MAXIMUM MATERIAL CONDITION.

6. TERMINAL NUMBERS ARE SHOWN FOR REFERENCE ONLY.

7. DIMENSIONS ARE TO BE DETERMINED AT DATUM PLANE -W-.

© FREESCALE SEMICONDUCTOR, INC.
ALL RIGHTS RESERVED.

MECHANICAL OUTLINE	PRINT VERSION NOT TO SCALE

TITLE:	DOCUMENT NO: 98ASH70247A	REV: B
16 LD TSSOP, PITCH 0.65MM	CASE NUMBER: 948F-01	19 MAY 2005
	STANDARD: JEDEC	

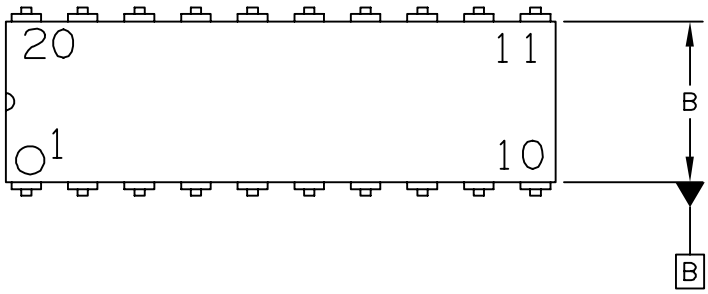

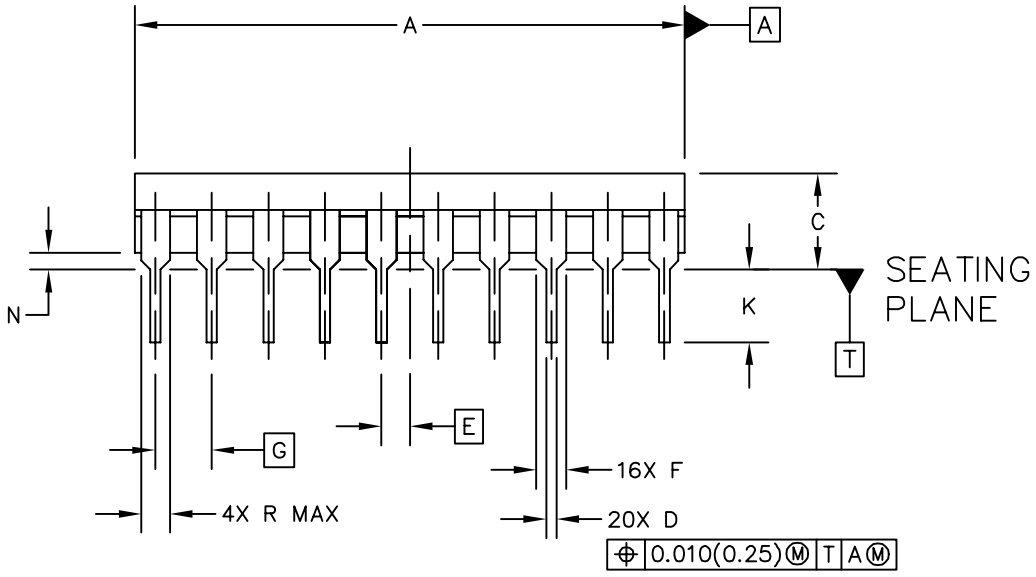

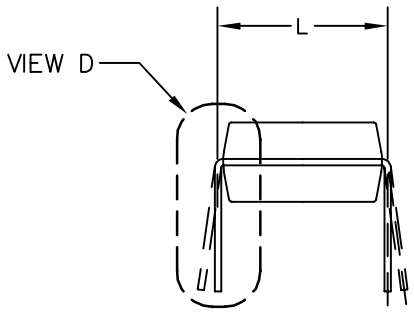

© FREESCALE SEMICONDUCTOR, INC.
ALL RIGHTS RESERVED.

MECHANICAL OUTLINE	PRINT VERSION NOT TO SCALE

TITLE:	DOCUMENT NO: 98ASB42899B	REV: B
20LD .300 PDIP	CASE NUMBER: 738C-01	24 MAY 2005
	STANDARD: NON-JEDEC	

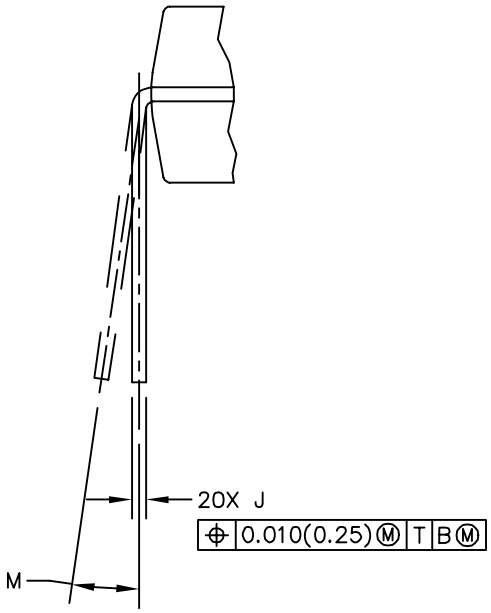

VIEW D

© FREESCALE SEMICONDUCTOR, INC.
ALL RIGHTS RESERVED.

MECHANICAL OUTLINE	PRINT VERSION NOT TO SCALE

TITLE:	DOCUMENT NO: 98ASB42899B	REV: B
20LD .300 PDIP	CASE NUMBER: 738C-01	24 MAY 2005
	STANDARD: NON-JEDEC	

NOTES:

1. DIMENSIONING AND TOLERANCING PER ASME Y14.5M 1994.
2. CONTROLLING DIMENSION: INCH.
3. DIMENSION L TO CENTER OF LEAD WHEN FORMED PARALLEL.
4. DIMENSION B DOES NOT INCLUDE MOLD FLASH.

DIM	MILLIMETERS MIN	MAX	DIM	INCHES MIN	MAX	DIM	MILLIMETERS MIN	MAX	DIM	INCHES MIN	MAX
A	24.39	24.99		0.960	0.984						
B	6.96	7.49		0.274	0.295						
C	3.56	5.08		0.140	0.200						
D	0.38	0.56		0.015	0.022						
E	1.27 BSC			0.050 BSC							
F	1.14	1.52		0.045	0.060						
G	2.54 BSC			0.100 BSC							
J	0.20	0.38		0.008	0.015						
K	2.79	3.76		0.110	0.148						
L	7.62 BSC			0.300 BSC							
M	0°	15°		0°	15°						
N	0.50	1.01		0.020	0.040						
R	.....	1.29		.....	0.051						

© FREESCALE SEMICONDUCTOR, INC.
ALL RIGHTS RESERVED.

MECHANICAL OUTLINE

PRINT VERSION NOT TO SCALE

TITLE:

20LD .300 PDIP

DOCUMENT NO: 98ASB42899B

REV: B

CASE NUMBER: 738C-01

24 MAY 2005

STANDARD: NON-JEDEC

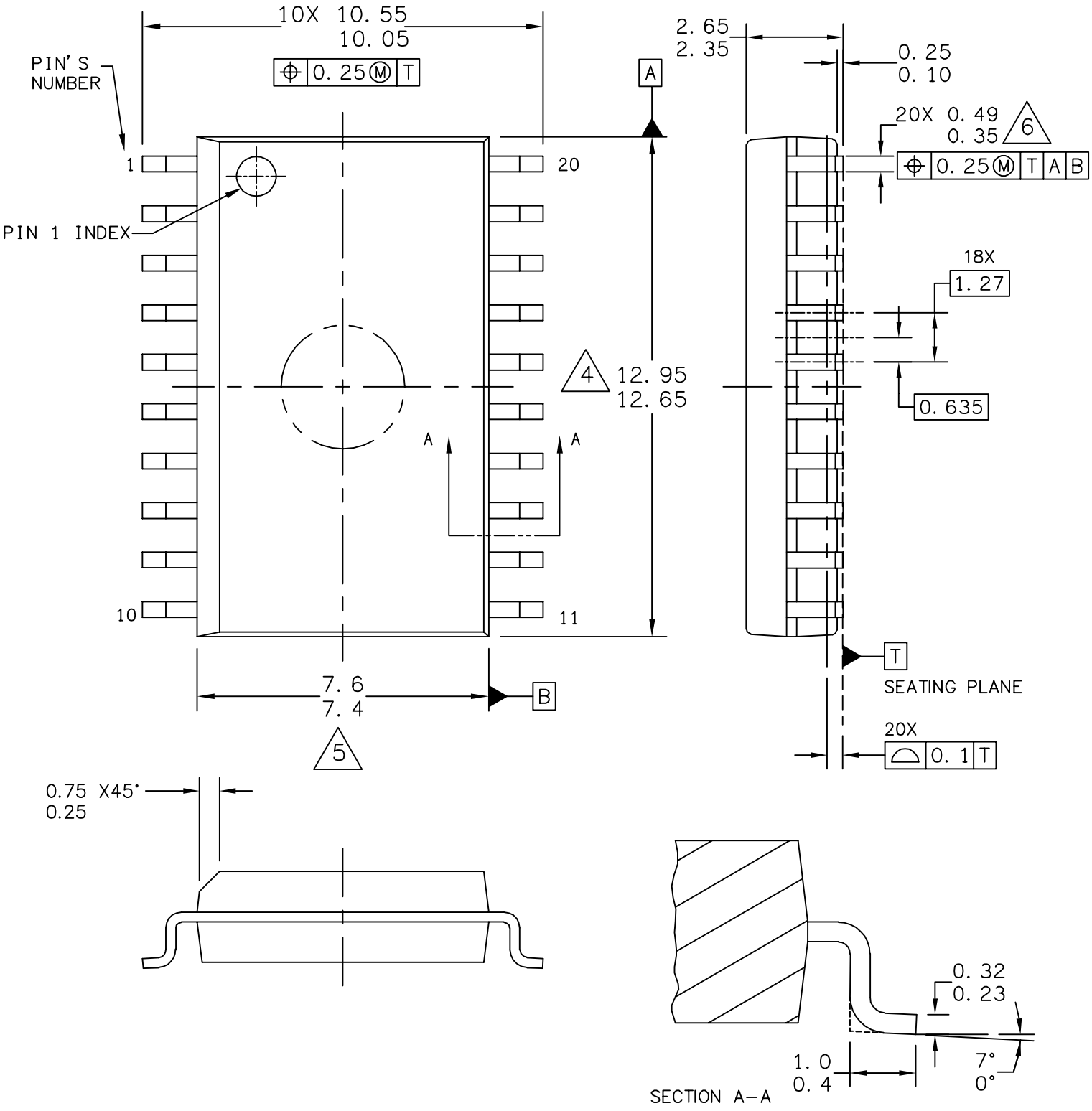

© FREESCALE SEMICONDUCTOR, INC.
ALL RIGHTS RESERVED.

MECHANICAL OUTLINE	PRINT VERSION NOT TO SCALE

TITLE:	DOCUMENT NO: 98ASB42343B	REV: J
20LD SOIC W/B, 1.27 PITCH CASE-OUTLINE	CASE NUMBER: 751D-07	23 MAR 2005
	STANDARD: JEDEC MS-013AC	

NOTES:

1. DIMENSIONS ARE IN MILLIMETERS.

2. DIMENSIONING AND TOLERANCING PER ASME Y14.5M–1994.

3. DATUMS A AND B TO BE DETERMINED AT THE PLANE WHERE THE BOTTOM OF THE LEADS EXIT THE PLASTIC BODY.

4. THIS DIMENSION DOES NOT INCLUDE MOLD FLASH, PROTRUSION OR GATE BURRS. MOLD FLASH, PROTRUSION OR GATE BURRS SHALL NOT EXCEED 0.15 MM PER SIDE. THIS DIMENSION IS DETERMINED AT THE PLANE WHERE THE BOTTOM OF THE LEADS EXIT THE PLASTIC BODY.

5. THIS DIMENSION DOES NOT INCLUDE INTER–LEAD FLASH OR PROTRUSIONS. INTER–LEAD FLASH AND PROTRUSIONS SHALL NOT EXCEED 0.25 MM PER SIDE. THIS DIMENSION IS DETERMINED AT THE PLANE WHERE THE BOTTOM OF THE LEADS EXIT THE PLASTIC BODY.

6. THIS DIMENSION DOES NOT INCLUDE DAMBAR PROTRUSION. ALLOWABLE DAMBAR PROTRUSION SHALL NOT CAUSE THE LEAD WIDTH TO EXCEED 0.62 mm.

© FREESCALE SEMICONDUCTOR, INC.
ALL RIGHTS RESERVED.

MECHANICAL OUTLINE	PRINT VERSION NOT TO SCALE

TITLE:	DOCUMENT NO: 98ASB42343B	REV: J
20LD SOIC W/B, 1.27 PITCH, CASE OUTLINE	CASE NUMBER: 751D–07	23 MAR 2005
	STANDARD: JEDEC MS–013AC	

How to Reach Us:

Home Page:
www.freescale.com

Web Support:
http://www.freescale.com/support

USA/Europe or Locations Not Listed:
Freescale Semiconductor, Inc.
Technical Information Center, EL516
2100 East Elliot Road
Tempe, Arizona 85284
1-800-521-6274 or +1-480-768-2130
www.freescale.com/support

Europe, Middle East, and Africa:
Freescale Halbleiter Deutschland GmbH
Technical Information Center
Schatzbogen 7
81829 Muenchen, Germany
+44 1296 380 456 (English)
+46 8 52200080 (English)
+49 89 92103 559 (German)
+33 1 69 35 48 48 (French)
www.freescale.com/support

Japan:
Freescale Semiconductor Japan Ltd.
Headquarters
ARCO Tower 15F
1-8-1, Shimo-Meguro, Meguro-ku,
Tokyo 153-0064
Japan
0120 191014 or +81 3 5437 9125
support.japan@freescale.com

Asia/Pacific:
Freescale Semiconductor China Ltd.
Exchange Building 23F
No. 118 Jianguo Road
Chaoyang District
Beijing 100022
China
+86 10 5879 8000
support.asia@freescale.com

For Literature Requests Only:
Freescale Semiconductor Literature Distribution Center
P.O. Box 5405
Denver, Colorado 80217
1-800-441-2447 or +1-303-675-2140
Fax: +1-303-675-2150
LDCForFreescaleSemiconductor@hibbertgroup.com

Document Number: MC9RS08KA8
Rev. 4
6/2009

Information in this document is provided solely to enable system and software implementers to use Freescale Semiconductor products. There are no express or implied copyright licenses granted hereunder to design or fabricate any integrated circuits or integrated circuits based on the information in this document.

Freescale Semiconductor reserves the right to make changes without further notice to any products herein. Freescale Semiconductor makes no warranty, representation or guarantee regarding the suitability of its products for any particular purpose, nor does Freescale Semiconductor assume any liability arising out of the application or use of any product or circuit, and specifically disclaims any and all liability, including without limitation consequential or incidental damages. “Typical” parameters that may be provided in Freescale Semiconductor data sheets and/or specifications can and do vary in different applications and actual performance may vary over time. All operating parameters, including “Typicals”, must be validated for each customer application by customer’s technical experts. Freescale Semiconductor does not convey any license under its patent rights nor the rights of others. Freescale Semiconductor products are not designed, intended, or authorized for use as components in systems intended for surgical implant into the body, or other applications intended to support or sustain life, or for any other application in which the failure of the Freescale Semiconductor product could create a situation where personal injury or death may occur. Should Buyer purchase or use Freescale Semiconductor products for any such unintended or unauthorized application, Buyer shall indemnify and hold Freescale Semiconductor and its officers, employees, subsidiaries, affiliates, and distributors harmless against all claims, costs, damages, and expenses, and reasonable attorney fees arising out of, directly or indirectly, any claim of personal injury or death associated with such unintended or unauthorized use, even if such claim alleges that Freescale Semiconductor was negligent regarding the design or manufacture of the part.

RoHS-compliant and/or Pb-free versions of Freescale products have the functionality and electrical characteristics as their non-RoHS-compliant and/or non-Pb-free counterparts. For further information, see http://www.freescale.com or contact your Freescale sales representative.

For information on Freescale’s Environmental Products program, go to http://www.freescale.com/epp.

Freescale™ and the Freescale logo are trademarks of Freescale Semiconductor, Inc. All other product or service names are the property of their respective owners.

© Freescale Semiconductor, Inc. 2008-2009. All rights reserved.

freescale™
semiconductor