Kinetis V Series KV10 and KV11, 128/64 KB Flash

75 MHz Cortex-M0+ Based Microcontroller

MKV11Z128VXX7
MKV11Z64VXX7
MKV10Z64VXX7
MKV10Z128VXX7

The Kinetis V Series KV11x MCU family is built on Arm® Cortex®-M0+ core and enabled by innovative 90nm thin film storage (TFS) flash process technology. The KV11x is an extension of the existing KV10x family providing increased memory, higher pin count, additional FTMs and a FlexCAN serial interface.

- Dual 16-bit ADCs sampling at up to 1.2 MS/s in 12-bit mode
- Highly accurate and flexible motor control timers
- Ideal for industrial motor control applications, inverters, and low-end power conversion applications

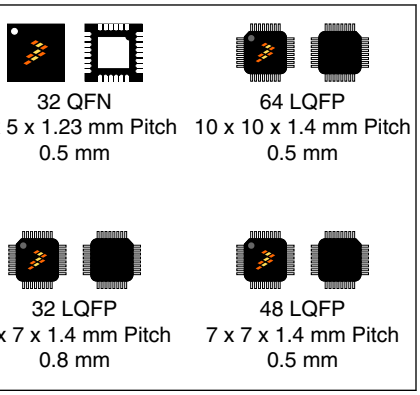

Performance
- Up to 75 MHz Arm Cortex-M0+ based core

Memories and memory interfaces
- Up to 128 KB of program flash memory
- Up to 16 KB of RAM

System peripherals
- Nine low-power modes to provide power optimization based on application requirements
- 8-channel DMA controller
- SWD interface and Micro Trace buffer
- Bit Manipulation Engine (BME)
- External watchdog timer
- Advanced independent clocked watchdog
- Memory Mapped Divide and Square Root (MMDVSQ) module

Clocks
- 32-40 kHz or 4-32 MHz external crystal oscillator
- Multipurpose clock generator (MCG) with frequency-locked loop referencing either internal or external reference clock

Security and integrity modules
- 80-bit unique identification (ID) number per chip
- Hardware CRC module

Communication interfaces
- One 16-bit SPI module
- One I2C module
- Two UART modules
- One FlexCAN module[1]

Timers
- Programmable delay block
- Two 6-channel FlexTimers (FTM) for motor control/ general purpose applications
- Four 2-channel FlexTimers (FTM) with quadrature decoder functionality
- 16-bit low-power timer (LPTMR)

Operating Characteristics
- Voltage range: 1.71 to 3.6 V
- Flash write voltage range: 1.71 to 3.6 V
- Temperature range (ambient): –40 to 105°C

Analog modules
- Two 16-bit SAR ADCs
- 12-bit DAC
- Two analog comparators (ACMP) containing a 6-bit DAC and programmable reference input

Human-machine interface
- General-purpose I/O

1. Available only on KV11 parts

NXP reserves the right to change the production detail specifications as may be required to permit improvements in the design of its products.

Ordering Information

Part Number [1]	Memory		FlexCAN	Maximum number of I\O's
	Flash (KB)	SRAM (KB)		
MKV11Z128VLH7	128	16	Yes	46
MKV11Z128VLF7	128	16	Yes	35
MKV11Z128VLC7 [2]	128	16	Yes	26
MKV11Z128VFM7	128	16	Yes	26
MKV11Z64VLH7	64	16	Yes	46
MKV11Z64VLF7	64	16	Yes	35
MKV11Z64VLC7 [2]	64	16	Yes	26
MKV11Z64VFM7	64	16	Yes	26
MKV10Z64VLH7	64	16	No	46
MKV10Z64VLF7	64	16	No	35
MKV10Z64VLC7 [2]	64	16	No	26
MKV10Z64VFM7	128	16	No	26
MKV10Z128VLH7	128	16	No	46
MKV10Z128VLF7	128	16	No	35
MKV10Z128VLC7 [2]	128	16	No	26
MKV10Z128VFM7	128	16	No	26

1. To confirm current availability of orderable part numbers, go to http://www.nxp.com and perform a part number search.
2. The 32-pin LQFP package supporting this part number is not yet available, however it is included in a Package Your Way program for Kinetis MCUs. Please visit http://www.nxp.com/KPYW for more details.

Related Resources

Type	Description	Resource
Product Selector	The Product Selector is a web-based tool to assist in selecting the MCU product for your application.	Product Selector
Product Brief	The Product Brief contains concise overview/summary information to enable quick evaluation of a device for design suitability.	KV10PB [1]
Reference Manual	The Reference Manual contains a comprehensive description of the structure and function (operation) of a device.	KV10P48M75RM [1]
Data Sheet	The Data Sheet includes electrical characteristics and signal connections.	This document
Chip Errata	The chip mask set Errata provides additional or corrective information for a particular device mask set.	• KV10Z_1N81H[1] • KINETIS_V_0N63P[1]
Package drawing	Package dimensions are provided in package drawings.	• QFN 32-pin: 98ASA00473D[1] • LQFP 32-pin: 98ASH70029A[1] • LQFP 48-pin: 98ASH00962A[1] • LQFP 64-pin: 98ASS23234W[1]

1. To find the associated resource, go to http://www.nxp.com and perform a search using this term.

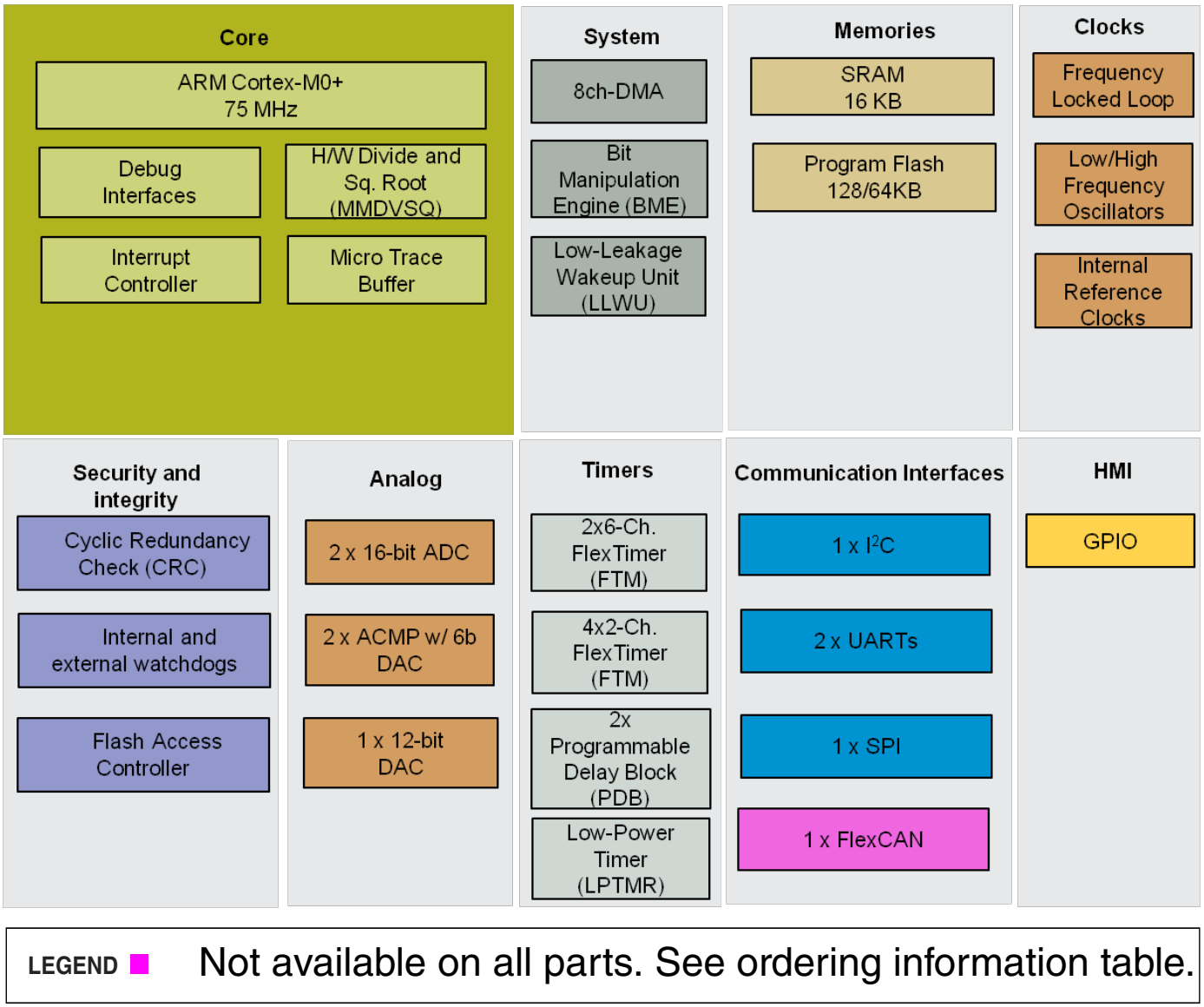

Figure 1. KV11 block diagram

Table of Contents

1 Ratings....5
1.1 Thermal handling ratings....5
1.2 Moisture handling ratings....5
1.3 ESD handling ratings....5
1.4 Voltage and current operating ratings....5
2 General....6
2.1 AC electrical characteristics....6
2.2 Nonswitching electrical specifications....7
2.2.1 Voltage and current operating requirements....7
2.2.2 LVD and POR operating requirements....8
2.2.3 Voltage and current operating behaviors....9
2.2.4 Power mode transition operating behaviors....9
2.2.5 KV11x Power consumption operating behaviors....10
2.2.6 EMC radiated emissions operating behaviors....16
2.2.7 Designing with radiated emissions in mind....17
2.2.8 Capacitance attributes....17
2.3 Switching specifications....17
2.3.1 Device clock specifications....17
2.3.2 General switching specifications....18
2.4 Thermal specifications....19
2.4.1 Thermal operating requirements....19
2.4.2 Thermal attributes....19
3 Peripheral operating requirements and behaviors....20
3.1 Core modules....20
3.1.1 SWD Electricals....20
3.2 System modules....21
3.3 Clock modules....21
3.3.1 MCG specifications....21
3.3.2 Oscillator electrical specifications....23
3.4 Memories and memory interfaces....25
3.4.1 Flash electrical specifications....25
3.5 Security and integrity modules....27
3.6 Analog....27
3.6.1 ADC electrical specifications....27
3.6.2 CMP and 6-bit DAC electrical specifications....31
3.6.3 12-bit DAC electrical characteristics....33
3.7 Timers....36
3.8 Communication interfaces....36
3.8.1 DSPI switching specifications (limited voltage range)....36
3.8.2 DSPI switching specifications (full voltage range)....39
3.8.3 I2C....43
3.8.4 UART....43
4 Dimensions....43
4.1 Obtaining package dimensions....43
5 Pinout....44
5.1 KV11 Signal Multiplexing and Pin Assignments....44
5.2 KV11 Pinouts....47
6 Ordering parts....50
6.1 Determining valid orderable parts....50
7 Part identification....50
7.1 Description....51
7.2 Format....51
7.3 Fields....51
7.4 Example....51
8 Terminology and guidelines....52
8.1 Definition: Operating requirement....52
8.2 Definition: Operating behavior....52
8.3 Definition: Attribute....52
8.4 Definition: Rating....53
8.5 Result of exceeding a rating....53
8.6 Relationship between ratings and operating requirements....54
8.7 Guidelines for ratings and operating requirements....54
8.8 Definition: Typical value....55
8.9 Typical Value Conditions....56
9 Revision history....56

1 Ratings

1.1 Thermal handling ratings

Symbol	Description	Min.	Max.	Unit	Notes
T_{STG}	Storage temperature	–55	150	°C	1
T_{SDR}	Solder temperature, lead-free	—	260	°C	2

1. Determined according to JEDEC Standard JESD22-A103, *High Temperature Storage Life*.
2. Determined according to IPC/JEDEC Standard J-STD-020, *Moisture/Reflow Sensitivity Classification for Nonhermetic Solid State Surface Mount Devices*.

1.2 Moisture handling ratings

Symbol	Description	Min.	Max.	Unit	Notes
MSL	Moisture sensitivity level	—	3	—	1

1. Determined according to IPC/JEDEC Standard J-STD-020, *Moisture/Reflow Sensitivity Classification for Nonhermetic Solid State Surface Mount Devices*.

1.3 ESD handling ratings

Symbol	Description	Min.	Max.	Unit	Notes
V_{HBM}	Electrostatic discharge voltage, human-body model	-2000	+2000	V	1
V_{CDM}	Electrostatic discharge voltage, charged-device model	-500	+500	V	2
I_{LAT}	Latch-up current at ambient temperature of 105 °C	-100	+100	mA	

1. Determined according to JEDEC Standard JESD22-A114, *Electrostatic Discharge (ESD) Sensitivity Testing Human Body Model (HBM)*.
2. Determined according to JEDEC Standard JESD22-C101, *Field-Induced Charged-Device Model Test Method for Electrostatic-Discharge-Withstand Thresholds of Microelectronic Components*.

1.4 Voltage and current operating ratings

Symbol	Description	Min.	Max.	Unit
V_{DD}	Digital supply voltage	–0.3	3.8	V
I_{DD}	Digital supply current	—	120	mA
V_{IO}	Digital pin input voltage (except open drain pins)	–0.3	VDD + 0.3[1]	V
	Open drain pins (PTC6 and PTC7)	–0.3	5.5	V
I_D	Instantaneous maximum current single pin limit (applies to all port pins)	–25	25	mA
V_{DDA}	Analog supply voltage	V_{DD} – 0.3	V_{DD} + 0.3	V

1. Maximum value of V_{IO} (except open drain pins) must be 3.8 V.

2 General

Electromagnetic compatibility (EMC) performance depends on the environment in which the MCU resides. Board design and layout, circuit topology choices, location, characteristics of external components, and MCU software operation play a significant role in EMC performance.

See the following applications notes available on nxp.com for guidelines on optimizing EMC performance.

- *AN2321: Designing for Board Level Electromagnetic Compatibility*
- *AN1050: Designing for Electromagnetic Compatibility (EMC) with HCMOS Microcontrollers*
- *AN1263: Designing for Electromagnetic Compatibility with Single-Chip Microcontrollers*
- *AN2764: Improving the Transient Immunity Performance of Microcontroller-Based Applications*
- *AN1259: System Design and Layout Techniques for Noise Reduction in MCU-Based Systems*

2.1 AC electrical characteristics

Unless otherwise specified, propagation delays are measured from the 50% to the 50% point, and rise and fall times are measured at the 20% and 80% points, as shown in the following figure.

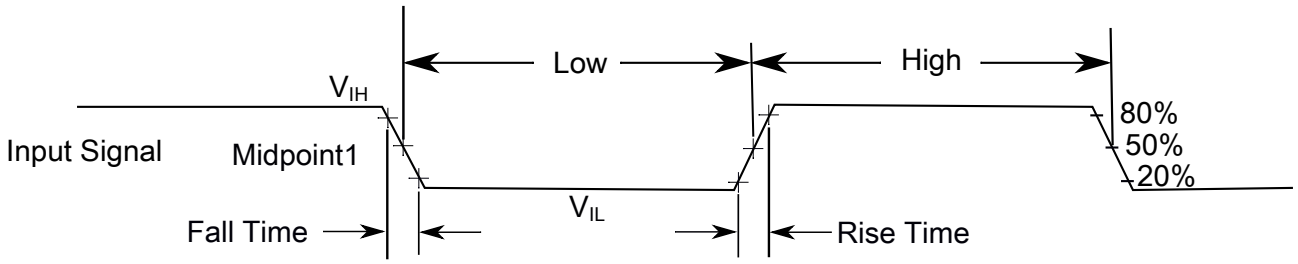

The midpoint is $V_{IL} + (V_{IH} - V_{IL}) / 2$

Figure 2. Input signal measurement reference

All digital I/O switching characteristics, unless otherwise specified, assume:

1. output pins
   - have C_L=30pF loads,
   - are slew rate disabled, and
   - are normal drive strength

2.2 Nonswitching electrical specifications

2.2.1 Voltage and current operating requirements

Table 1. Voltage and current operating requirements

Symbol	Description	Min.	Max.	Unit	Notes
V_{DD}	Supply voltage	1.71	3.6	V	
V_{DDA}	Analog supply voltage	1.71	3.6	V	
$V_{DD} – V_{DDA}$	V_{DD}-to-V_{DDA} differential voltage	–0.1	0.1	V	
$V_{SS} – V_{SSA}$	V_{SS}-to-V_{SSA} differential voltage	–0.1	0.1	V	
V_{IH}	Input high voltage • 2.7 V ≤ V_{DD} ≤ 3.6 V • 1.71 V ≤ V_{DD} ≤ 2.7 V	 0.7 × V_{DD} 0.75 × V_{DD}	 — —	 V V	
V_{IL}	Input low voltage • 2.7 V ≤ V_{DD} ≤ 3.6 V • 1.71 V ≤ V_{DD} ≤ 2.7 V	 — —	 0.35 × V_{DD} 0.3 × V_{DD}	 V V	
V_{HYS}	Input hysteresis	0.06 × V_{DD}	—	V	
I_{ICIO}	Pin negative DC injection current—single pin • V_{IN} < V_{SS}–0.3V	-5	—	mA	1

Table continues on the next page...

Table 1. Voltage and current operating requirements (continued)

Symbol	Description	Min.	Max.	Unit	Notes
I_{ICcont}	Contiguous pin DC injection current—regional limit, includes sum of negative injection currents or sum of positive injection currents of 16 contiguous pins • Negative current injection	–25	—	mA	
V_{RAM}	V_{DD} voltage required to retain RAM	1.2	—	V	

1. All I/O pins are internally clamped to V_{SS} through an ESD protection diode. There is no diode connection to V_{DD}. If V_{IN} greater than V_{IO_MIN} (= V_{SS}-0.3 V) is observed, then there is no need to provide current limiting resistors at the pads. If this limit cannot be observed, then a current limiting resistor is required. The negative DC injection current limiting resistor is calculated as R = (V_{IO_MIN} - V_{IN})/I_{ICIO}.

2.2.2 LVD and POR operating requirements

Table 2. V_{DD} supply LVD and POR operating requirements

Symbol	Description	Min.	Typ.	Max.	Unit	Notes
V_{POR}	Falling V_{DD} POR detect voltage	0.8	1.1	1.5	V	
V_{LVDH}	Falling low-voltage detect threshold — high range (LVDV=01)	2.48	2.56	2.64	V	
	Low-voltage warning thresholds — high range					1
V_{LVW1H}	• Level 1 falling (LVWV=00)	2.62	2.70	2.78	V	
V_{LVW2H}	• Level 2 falling (LVWV=01)	2.72	2.80	2.88	V	
V_{LVW3H}	• Level 3 falling (LVWV=10)	2.82	2.90	2.98	V	
V_{LVW4H}	• Level 4 falling (LVWV=11)	2.92	3.00	3.08	V	
V_{HYSH}	Low-voltage inhibit reset/recover hysteresis — high range	—	±60	—	mV	
V_{LVDL}	Falling low-voltage detect threshold — low range (LVDV=00)	1.54	1.60	1.66	V	
	Low-voltage warning thresholds — low range					1
V_{LVW1L}	• Level 1 falling (LVWV=00)	1.74	1.80	1.86	V	
V_{LVW2L}	• Level 2 falling (LVWV=01)	1.84	1.90	1.96	V	
V_{LVW3L}	• Level 3 falling (LVWV=10)	1.94	2.00	2.06	V	
V_{LVW4L}	• Level 4 falling (LVWV=11)	2.04	2.10	2.16	V	
V_{HYSL}	Low-voltage inhibit reset/recover hysteresis — low range	—	±40	—	mV	
V_{BG}	Bandgap voltage reference	0.97	1.00	1.03	V	
t_{LPO}	Internal low power oscillator period — factory trimmed	900	1000	1100	µs	

1. Rising thresholds are falling threshold + hysteresis voltage

2.2.3 Voltage and current operating behaviors

Table 3. Voltage and current operating behaviors

Symbol	Description	Min.	Max.	Unit	Notes
V_{OH}	Output high voltage — Normal drive pad All port pins, except PTC6 and PTC7 • 2.7 V ≤ V_{DD} ≤ 3.6 V, I_{OH} = –5 mA • 1.71 V ≤ V_{DD} ≤ 2.7 V, I_{OH} = –1.5 mA	 V_{DD} – 0.5 V_{DD} – 0.5	 — —	 V V	
V_{OH}	Output high voltage — High drive pad PTB0, PTB1, PTC3, PTC4, PTD4, PTD5, PTD6, PTD7 pins • 2.7 V ≤ V_{DD} ≤ 3.6 V, I_{OH} = –18 mA • 1.71 V ≤ V_{DD} ≤ 2.7 V, I_{OH} = –6 mA	 V_{DD} – 0.5 V_{DD} – 0.5	 — —	 V V	
I_{OHT}	Output high current total for all ports	—	100	mA	
V_{OL}	Output low voltage — Normal drive pad All port pins • 2.7 V ≤ V_{DD} ≤ 3.6 V, I_{OL} = 5 mA • 1.71 V ≤ V_{DD} ≤ 2.7 V, I_{OL} = 1.5 mA	 — —	 0.5 0.5	 V V	
V_{OL}	Output low voltage — High drive pad PTB0, PTB1, PTC3, PTC4, PTD4, PTD5, PTD6, PTD7 pins • 2.7 V ≤ V_{DD} ≤ 3.6 V, I_{OL} = 18 mA • 1.71 V ≤ V_{DD} ≤ 2.7 V, I_{OL} = 6 mA	 — —	 0.5 0.5	 V V	
I_{OLT}	Output low current total for all ports	—	100	mA	
I_{IN}	Input leakage current (per pin) for full temperature range	—	1	µA	
I_{IN}	Input leakage current (per pin) at 25 °C	—	0.025	µA	1
I_{IN}	Input leakage current (total all pins) for full temperature range	—	41	µA	1
I_{OZ}	Hi-Z (off-state) leakage current (per pin)	—	1	µA	
R_{PU}	Internal pullup resistors	20	50	kΩ	2

1. Measured at V_{DD} = 3.6 V
2. Measured at V_{DD} supply voltage = V_{DD} min and Vinput = V_{SS}

2.2.4 Power mode transition operating behaviors

All specifications except t_{POR} and VLLSx→RUN recovery times in the following table assume this clock configuration:

- CPU and system clocks = 75 MHz
- Bus and flash clock = 25 MHz
- FEI clock mode

Table 4. Power mode transition operating behaviors

Symbol	Description	Min.	Typ.	Max.	Unit	Notes
t_{POR}	After a POR event, amount of time from the point V_{DD} reaches 1.8 V to execution of the first instruction across the operating temperature range of the chip.	—	—	300	µs	1
	• VLLS0 → RUN	—	123	132	µs	
	• VLLS1 → RUN	—	123	132	µs	
	• VLLS3 → RUN	—	67	72	µs	
	• VLPS → RUN	—	4	5	µs	
	• STOP → RUN	—	4	5	µs	

1. Normal boot FTFA_FOPT[LPBOOT]=11

2.2.5 KV11x Power consumption operating behaviors

Table 5. KV11x power consumption operating behaviors

Symbol	Description	Min.	Typ.	Max.	Unit	Notes
I_{DDA}	Analog supply current	—	—	5	mA	1
I_{DD_RUN}	Run mode current — all peripheral clocks disabled, code executing from flash					Target IDD
	• at 1.8 V 50 MHz (25 MHz Bus)	—	5.3	6.2	mA	
	• at 3.0 V 50 MHz (25 MHz Bus)	—	5.4	6.3	mA	
	• at 1.8 V 75 MHz (25 MHz Bus)	—	7.2	8.3	mA	
	• at 3.0 V 75 MHz (25 MHz Bus)	—	7.3	8.3	mA	
I_{DD_RUN}	Run mode current — all peripheral clocks enabled, code executing from flash					Target IDD

Table continues on the next page...

Table 5. KV11x power consumption operating behaviors (continued)

Symbol	Description	Min.	Typ.	Max.	Unit	Notes
	• at 1.8 V 50 MHz	—	8.5	9.7	mA	
	• at 3.0 V 50 MHz	—	8.5	9.8	mA	
	• at 1.8 V 75 MHz	—	11.6	13.0	mA	
	• at 3.0 V 75 MHz	—	11.7	13.2	mA	
I_{DD_WAIT}	Wait mode high frequency 75 MHz current at 3.0 V — all peripheral clocks disabled	—	4	—	mA	—
I_{DD_WAIT}	Wait mode reduced frequency 50 MHz current at 3.0 V — all peripheral clocks disabled	—	3.4	—	mA	—
I_{DD_VLPR}	Very-Low-Power Run mode current 4 MHz at 3.0 V — all peripheral clocks disabled	—	268	—	µA	4 MHz CPU speed, 1 MHz bus speed.
I_{DD_VLPR}	Very-Low-Power Run mode current 4 MHz at 3.0 V — all peripheral clocks enabled	—	437	—	µA	4 MHz CPU speed, 1 MHz bus speed.
I_{DD_VLPW}	Very-Low-Power Wait mode current at 3.0 V — all peripheral clocks enabled	—	348.9	—	µA	4 MHz CPU speed, 1 MHz bus speed.
I_{DD_VLPW}	Very-Low-Power Wait mode current at 3.0 V — all peripheral clocks disabled	—	173.4	—	µA	4 MHz CPU speed, 1 MHz bus speed.
I_{DD_STOP}	Stop mode current at 3.0 V					—
	• -40 °C to 25 °C	—	247.2	286	µA	
	• at 50 °C	—	260.7	300		
	• at 70 °C	—	286	312		
	• at 85 °C	—	324	353		
	• at 105 °C	—	422.7	494		
I_{DD_VLPS}	Very-Low-Power Stop mode current at 3.0 V					—
	• -40 °C to 25 °C	—	2.9	3	µA	
	• at 50 °C	—	6.8	5.9		
	• at 70 °C	—	15.4	13		
	• at 85 °C	—	29.1	39		
	• at 105 °C	—	66.4	86		
I_{DD_VLLS3}	Very-Low-Leakage Stop mode 3 current at 3.0 V				µA	—
	• -40 °C to 25 °C	—	1.3	1.6		
	• at 50 °C	—	2	2.3		
	• at 70 °C	—	3.7	4.3		
	• at 85 °C	—	6.7	7.5		
	• at 105 °C	—	15.1	16		
I_{DD_VLLS1}	Very-Low-Leakage Stop mode 1 current at 3.0 V				µA	—

Table continues on the next page...

Table 5. KV11x power consumption operating behaviors (continued)

Symbol	Description	Min.	Typ.	Max.	Unit	Notes
	• -40°C to 25°C	—	0.8	1.2		
	• at 50°C	—	1.2	1.4		
	• at 70°C	—	2.2	2.7		
	• at 85°C	—	4.0	5.1		
	• at 105°C	—	9.4	11.8		
I_{DD_VLLS0}	Very-Low-Leakage Stop mode 0 current (SMC_STOPCTRL[PORPO] = 0) at 3.0 V				µA	—
	• -40 °C to 25 °C	—	0.279	0.386		
	• at 50 °C	—	0.638	0.854		
	• at 70 °C	—	1.63	2.2		
	• at 85 °C	—	3.4	4.5		
	• at 105 °C	—	8.9	11.2		
I_{DD_VLLS0}	Very-Low-Leakage Stop mode 0 current (SMC_STOPCTRL[PORPO] = 1) at 3.0 V				µA	2
	• -40 °C to 25 °C	—	0.098	0.452		
	• at 50 °C	—	0.448	0.674		
	• at 70 °C	—	1.4	1.9		
	• at 85 °C	—	3.19	4.3		
	• at 105 °C	—	8.47	10.6		

1. The analog supply current is the sum of the active or disabled current for each of the analog modules on the device. See each module's specification for its supply current.
2. No brownout

Table 6. Low power mode peripheral adders — typical value

Symbol	Description	Temperature (°C)						Unit
		-40	25	50	70	85	105	
$I_{IREFSTEN4MHz}$	4 MHz internal reference clock (IRC) adder. Measured by entering STOP or VLPS mode with 4 MHz IRC enabled.	56	56	56	56	56	56	µA
$I_{IREFSTEN32KHz}$	32 kHz internal reference clock (IRC) adder. Measured by entering STOP mode with the 32 kHz IRC enabled.	52	52	52	52	52	52	µA
$I_{EREFSTEN4MHz}$	External 4 MHz crystal clock adder. Measured by entering STOP or VLPS mode with the crystal enabled.	206	228	237	245	251	258	uA
$I_{EREFSTEN32KHz}$	External 32 kHz crystal clock adder by means of the OSC0_CR[EREFSTEN and EREFSTEN] bits. Measured by							

Table continues on the next page...

Table 6. Low power mode peripheral adders — typical value (continued)

Symbol	Description	Temperature (°C)						Unit
		-40	25	50	70	85	105	
	entering all modes with the crystal enabled.	440	490	540	560	570	580	
	VLLS1	440	490	540	560	570	580	nA
	VLLS3	510	560	560	560	610	680	
	VLPS	510	560	560	560	610	680	
	STOP							
I_{CMP}	CMP peripheral adder measured by placing the device in VLLS1 mode with CMP enabled using the 6-bit DAC and a single external input for compare. Includes 6-bit DAC power consumption.	22	22	22	22	22	22	µA
I_{UART}	UART peripheral adder measured by placing the device in STOP or VLPS mode with selected clock source waiting for RX data at 115200 baud rate. Includes selected clock source power consumption.							
	MCGIRCLK (4 MHz internal reference clock)	66	66	66	66	66	66	µA
	OSCERCLK (4 MHz external crystal)	214	237	246	254	260	268	
I_{SPI}	SPI peripheral adder measured by placing the device in STOP or VLPS mode with selected clock source waiting for RX data at 115200 baud rate. Includes selected clock source power consumption.							
	MCGIRCLK (4 MHz internal reference clock)	66	66	66	66	66	66	µA
	OSCERCLK (4 MHz external crystal)	214	237	246	254	260	268	
I_{I2C}	I2C peripheral adder measured by placing the device in STOP or VLPS mode with selected clock source waiting for RX data at 115200 baud rate. Includes selected clock source power consumption.							
	MCGIRCLK (4 MHz internal reference clock)	66	66	66	66	66	66	µA
	OSCERCLK (4 MHz external crystal)	214	237	246	254	260	268	
I_{FTM}	FTM peripheral adder measured by placing the device in STOP or VLPS mode with selected clock source configured for output compare generating 100Hz clock signal. No load is placed on the I/O generating the							

Table continues on the next page...

Table 6. Low power mode peripheral adders — typical value (continued)

Symbol	Description	Temperature (°C)						Unit
		-40	25	50	70	85	105	
	clock signal. Includes selected clock source and I/O switching currents. MCGIRCLK (4 MHz internal reference clock) OSCERCLK (4 MHz external crystal)	150 300	150 300	150 300	150 320	150 340	150 350	µA
I_{BG}	Bandgap adder when BGEN bit is set and device is placed in VLPx, LLS, or VLLSx mode.	45	45	45	45	45	45	µA
I_{ADC}	ADC peripheral adder combining the measured values at VDD and VDDA by placing the device in STOP or VLPS mode. ADC is configured for low power mode using the internal clock and continuous conversions.	366	366	366	366	366	366	µA
I_{WDOG}	WDOG peripheral adder measured by placing the device in STOP or VLPS mode with selected clock source waiting for RX data at 115200 baud rate. Includes selected clock source power consumption. MCGIRCLK (4 MHz internal reference clock) OSCERCLK (4 MHz external crystal)	66 214	66 237	66 246	66 254	66 260	66 268	µA

2.2.5.1 Diagram: Typical IDD_RUN operating behavior

The following data was measured under these conditions:

- MCG in FBE for run mode (except for 75 MHz which is in FEE mode), and BLPE for VLPR mode
- No GPIOs toggled
- Code execution from flash with cache enabled
- For the ALLOFF curve, all peripheral clocks are disabled except FTFA

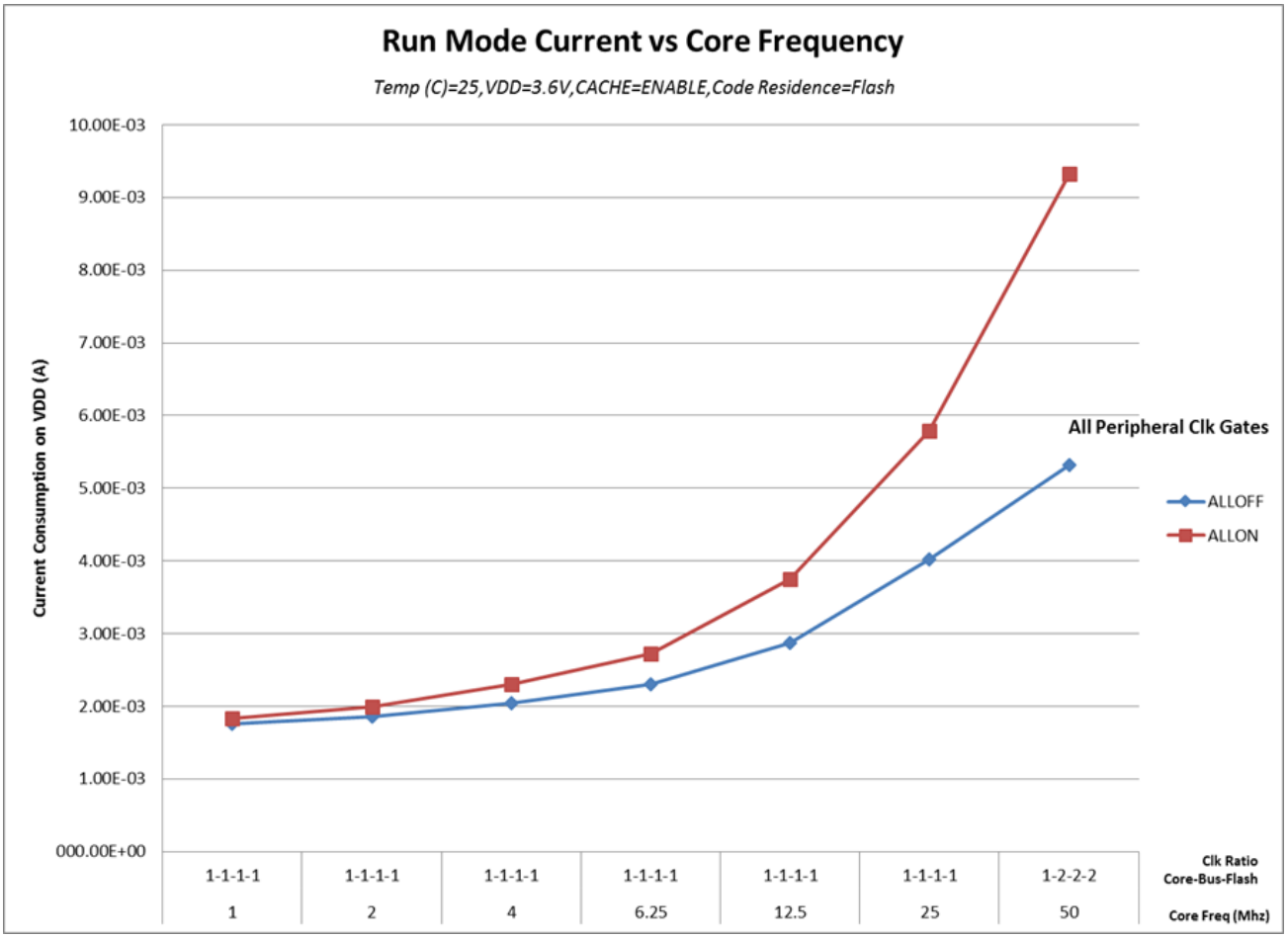

Figure 3. Run mode supply current vs. core frequency

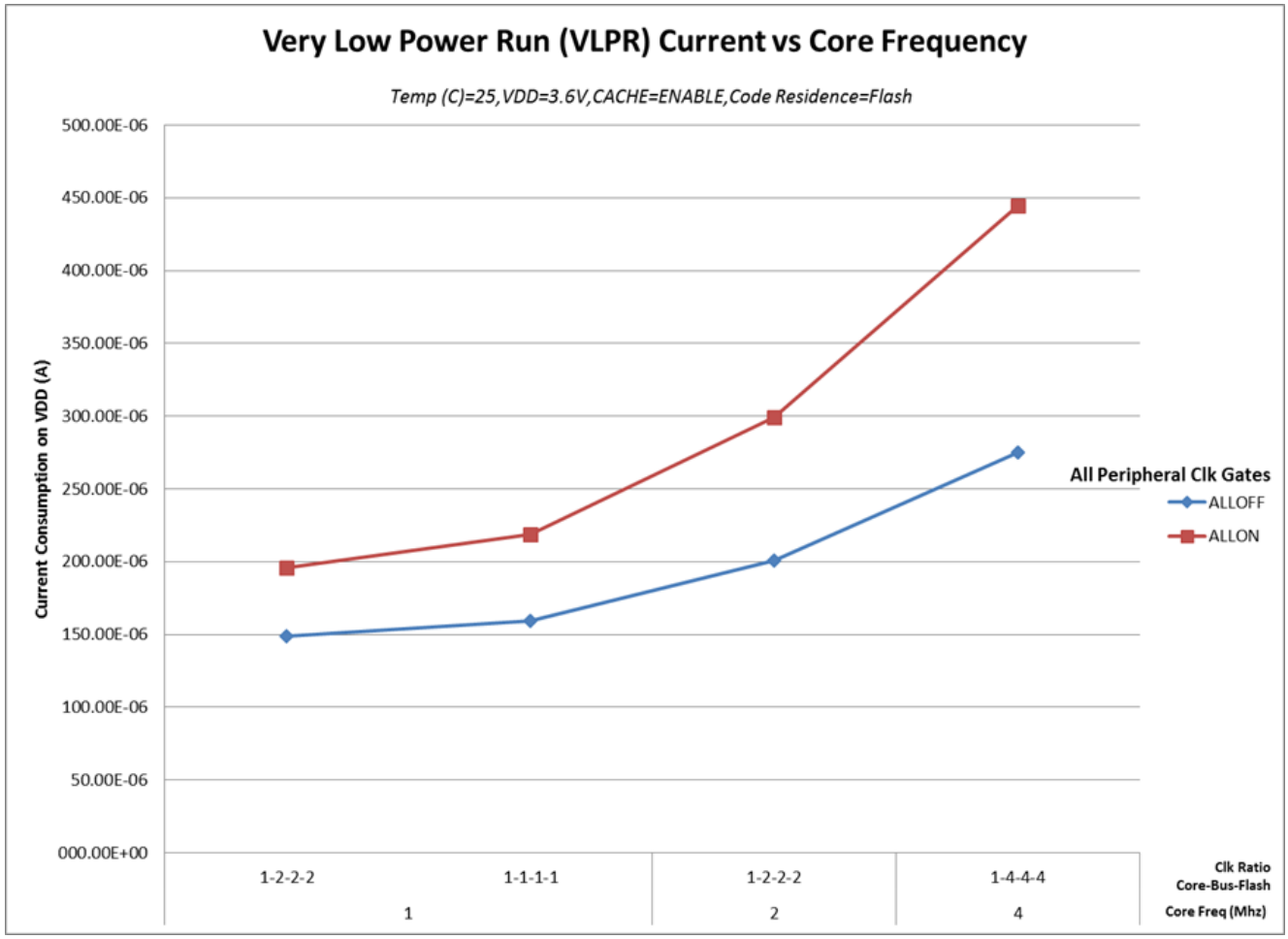

Figure 4. VLPR mode current vs. core frequency

2.2.6 EMC radiated emissions operating behaviors

Table 7. EMC radiated emissions operating behaviors

Symbol	Description	Frequency band (MHz)	Typ.	Unit	Notes
V_{RE1}	Radiated emissions voltage, band 1	0.15–50	15	dBµV	1, 2
V_{RE2}	Radiated emissions voltage, band 2	50–150	17	dBµV	
V_{RE3}	Radiated emissions voltage, band 3	150–500	12	dBµV	
V_{RE4}	Radiated emissions voltage, band 4	500–1000	4	dBµV	
V_{RE_IEC}	IEC level	0.15–1000	M	—	2, 3

1. Determined according to IEC Standard 61967-1, *Integrated Circuits - Measurement of Electromagnetic Emissions, 150 kHz to 1 GHz Part 1: General Conditions and Definitions* and IEC Standard 61967-2, *Integrated Circuits - Measurement of Electromagnetic Emissions, 150 kHz to 1 GHz Part 2: Measurement of Radiated Emissions—TEM Cell and Wideband TEM Cell Method*. Measurements were made while the microcontroller was running basic application code.

The reported emission level is the value of the maximum measured emission, rounded up to the next whole number, from among the measured orientations in each frequency range.

2. V_{DD} = 3.3 V, T_A = 25 °C, f_{OSC} = 10 MHz (crystal), f_{SYS} = 75 MHz, f_{BUS} = 25 MHz
3. Specified according to Annex D of IEC Standard 61967-2, *Measurement of Radiated Emissions—TEM Cell and Wideband TEM Cell Method*

2.2.7 Designing with radiated emissions in mind

To find application notes that provide guidance on designing your system to minimize interference from radiated emissions:

1. Go to www.nxp.com.
2. Perform a keyword search for "EMC design."

2.2.8 Capacitance attributes

Table 8. Capacitance attributes

Symbol	Description	Min.	Max.	Unit
C_{IN_A}	Input capacitance: analog pins	—	7	pF
C_{IN_D}	Input capacitance: digital pins	—	7	pF

2.3 Switching specifications

2.3.1 Device clock specifications

Table 9. Device clock specifications

Symbol	Description	Min.	Max.	Unit	Notes
Normal run mode					
f_{SYS}	System and core clock	—	48	MHz	
f_{BUS}	Bus clock	—	24	MHz	
f_{FLASH}	Flash clock	—	24	MHz	
f_{LPTMR}	LPTMR clock	—	24	MHz	
High Speed run mode					
f_{SYS}	System and core clock	—	75	MHz	
f_{BUS}	Bus clock	—	25	MHz	
f_{FLASH}	Flash clock	—	25	MHz	
f_{LPTMR}	LPTMR clock	—	25	MHz	

Table continues on the next page...

Table 9. Device clock specifications (continued)

Symbol	Description	Min.	Max.	Unit	Notes
f_{FTM}	FTM clock	—	75	MHz	
VLPR mode					
f_{SYS}	System and core clock	—	4	MHz	
f_{BUS}	Bus clock	—	1	MHz	
f_{FLASH}	Flash clock	—	1	MHz	
f_{LPTMR}	LPTMR clock	—	25	MHz	
f_{ERCLK}	External reference clock	—	16	MHz	
f_{LPTMR_pin}	LPTMR clock	—	25	MHz	
f_{LPTMR_ERCLK}	LPTMR external reference clock	—	16	MHz	
$f_{osc_hi_2}$	Oscillator crystal or resonator frequency — high frequency mode (high range) (MCG_C2[RANGE]=1x)	—	16	MHz	

2.3.2 General switching specifications

These general purpose specifications apply to all signals configured for GPIO, UART, CAN, and I^2C signals.

Table 10. General switching specifications

Symbol	Description	Min.	Max.	Unit	Notes
	GPIO pin interrupt pulse width (digital glitch filter disabled) — Synchronous path	1.5	—	Bus clock cycles	1
	External RESET and NMI pin interrupt pulse width — Asynchronous path	100	—	ns	2
	GPIO pin interrupt pulse width — Asynchronous path	16	—	ns	2
	Port rise and fall time Fast slew rate 1.71≤ VDD ≤ 2.7 V 2.7 ≤ VDD ≤ 3.6 V	 — —	 8 7	 ns ns	3
	Port rise and fall time Slow slew rate 1.71≤ VDD ≤ 2.7 V 2.7 ≤ VDD ≤ 3.6 V	 — —	 15 25	 ns ns	

1. The greater synchronous and asynchronous timing must be met.
2. This is the shortest pulse that is guaranteed to be recognized.
3. For high drive pins with high drive enabled, load is 75pF; other pins load (low drive) is 25pF.

2.4 Thermal specifications

2.4.1 Thermal operating requirements

Table 11. Thermal operating requirements

Symbol	Description	Min.	Max.	Unit
T_J	Die junction temperature	–40	125	°C
T_A	Ambient temperature [1]	–40	105	°C

1. Maximum T_A can be exceeded only if the user ensures that T_J does not exceed maximum T_J. The simplest method to determine T_J is:

   $T_J = T_A + R_{\theta JA}$ x chip power dissipation

2.4.2 Thermal attributes

Table 12. Thermal attributes

Board type	Symbol	Description	64 LQFP	48 LQFP	32 LQFP	32 QFN	Unit	Notes
Single-layer (1S)	$R_{\theta JA}$	Thermal resistance, junction to ambient (natural convection)	64	81	85	98	°C/W	1
Four-layer (2s2p)	$R_{\theta JA}$	Thermal resistance, junction to ambient (natural convection)	46	57	57	34	°C/W	
Single-layer (1S)	$R_{\theta JMA}$	Thermal resistance, junction to ambient (200 ft./min. air speed)	52	68	72	82	°C/W	
Four-layer (2s2p)	$R_{\theta JMA}$	Thermal resistance, junction to ambient (200 ft./min. air speed)	39	51	50	28	°C/W	
—	$R_{\theta JB}$	Thermal resistance, junction to board	28	35	33	14	°C/W	2
—	$R_{\theta JC}$	Thermal resistance, junction to case	15	25	25	2.5	°C/W	3
—	Ψ_{JT}	Thermal characterization parameter, junction to package top outside center (natural convection)	2	7	7	8	°C/W	4

1. Determined according to JEDEC Standard JESD51-2, *Integrated Circuits Thermal Test Method Environmental Conditions—Natural Convection (Still Air)*, or EIA/JEDEC Standard JESD51-6, *Integrated Circuit Thermal Test Method Environmental Conditions—Forced Convection (Moving Air)*.

2. Determined according to JEDEC Standard JESD51-8, *Integrated Circuit Thermal Test Method Environmental Conditions—Junction-to-Board*.
3. Determined according to Method 1012.1 of MIL-STD 883, *Test Method Standard, Microcircuits*, with the cold plate temperature used for the case temperature. The value includes the thermal resistance of the interface material between the top of the package and the cold plate.
4. Determined according to JEDEC Standard JESD51-2, *Integrated Circuits Thermal Test Method Environmental Conditions—Natural Convection (Still Air)*.

3 Peripheral operating requirements and behaviors

3.1 Core modules

3.1.1 SWD Electricals

Table 13. SWD full voltage range electricals

Symbol	Description	Min.	Max.	Unit
	Operating voltage	1.71	3.6	V
J1	SWD_CLK frequency of operation • Serial wire debug	 0	 25	 MHz
J2	SWD_CLK cycle period	1/J1	—	ns
J3	SWD_CLK clock pulse width • Serial wire debug	 20	 —	 ns
J4	SWD_CLK rise and fall times	—	3	ns
J9	SWD_DIO input data setup time to SWD_CLK rise	10	—	ns
J10	SWD_DIO input data hold time after SWD_CLK rise	0	—	ns
J11	SWD_CLK high to SWD_DIO data valid	—	32	ns
J12	SWD_CLK high to SWD_DIO high-Z	5	—	ns

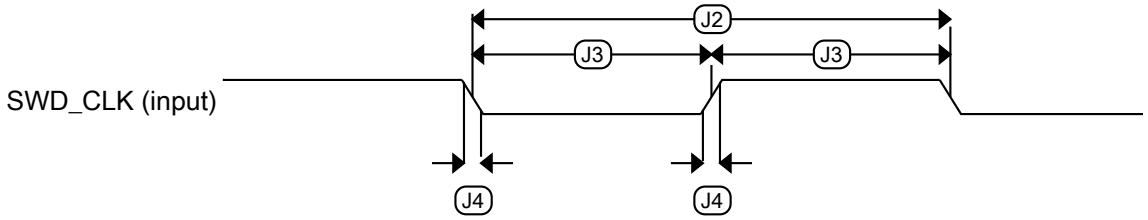

Figure 5. Serial wire clock input timing

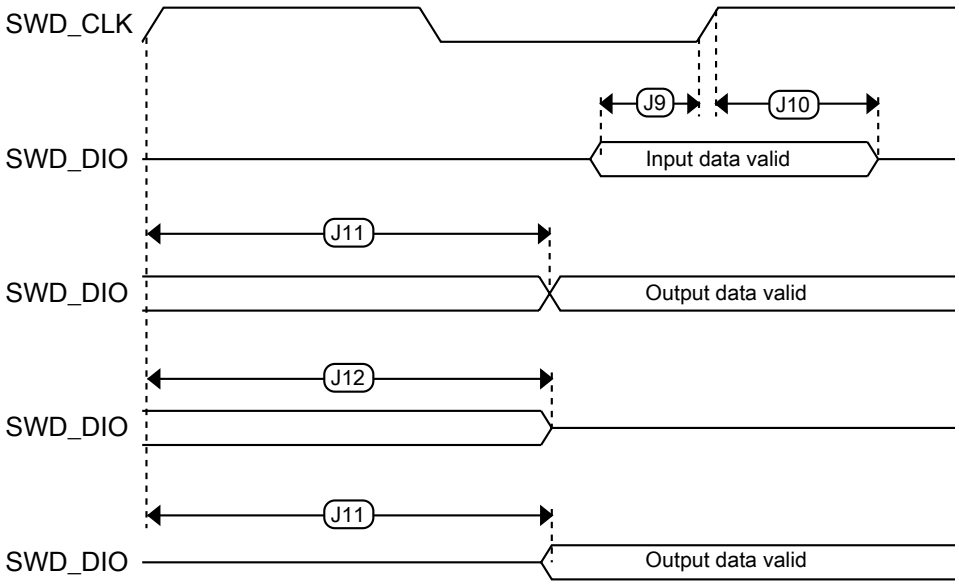

Figure 6. Serial wire data timing

3.2 System modules

There are no specifications necessary for the device's system modules.

3.3 Clock modules

3.3.1 MCG specifications

Table 14. MCG specifications

Symbol	Description	Min.	Typ.	Max.	Unit	Notes
f_{ints_ft}	Internal reference frequency (slow clock) — factory trimmed at nominal V_{DD} and 25 °C	—	32.768	—	kHz	
f_{ints_t}	Internal reference frequency (slow clock) — user trimmed	31.25	—	39.0625	kHz	
$\Delta_{fdco_res_t}$	Resolution of trimmed average DCO output frequency at fixed voltage and temperature — using SCTRIM and SCFTRIM	—	± 0.3	± 0.6	$\%f_{dco}$	1

Table continues on the next page...

Table 14. MCG specifications (continued)

Symbol	Description		Min.	Typ.	Max.	Unit	Notes
Δf_{dco_t}	Total deviation of trimmed average DCO output frequency over voltage and temperature		—	+0.5/-0.7	±2	$\%f_{dco}$	1, 2
Δf_{dco_t}	Total deviation of trimmed average DCO output frequency over fixed voltage and temperature range of 0 - 70 °C		—	± 0.4	± 1.5	$\%f_{dco}$	1, 2
f_{intf_ft}	Internal reference frequency (fast clock) — factory trimmed at nominal V_{DD} and 25 °C		—	4	—	MHz	
Δf_{intf_ft}	Frequency deviation of internal reference clock (fast clock) over temperature and voltage — factory trimmed at nominal V_{DD} and 25 °C		—	+1/-2	± 3	$\%f_{intf_ft}$	2
f_{intf_t}	Internal reference frequency (fast clock) — user trimmed at nominal V_{DD} and 25 °C		3	—	5	MHz	
f_{loc_low}	Loss of external clock minimum frequency — RANGE = 00		(3/5) x f_{ints_t}	—	—	kHz	
f_{loc_high}	Loss of external clock minimum frequency — RANGE = 01, 10, or 11		(16/5) x f_{ints_t}	—	—	kHz	
FLL							
f_{fll_ref}	FLL reference frequency range		31.25	—	39.0625	kHz	
f_{dco}	DCO output frequency range	Low range (DRS = 00, DMX32 = 0) 640 × f_{fll_ref}	20	20.97	25	MHz	3, 4
		Mid range (DRS = 01, DMX32 = 0) 1280 × f_{fll_ref}	40	41.94	48	MHz	
		Mid range (DRS = 10, DMX32 = 0) 1920 x f_{fll_ref}	60	62.915	75	MHz	
$f_{dco_t_DMX32}$	DCO output frequency	Low range (DRS = 00, DMX32 = 1) 732 × f_{fll_ref}	—	23.99	—	MHz	5 6
		Mid range (DRS = 01, DMX32 = 1) 1464 × f_{fll_ref}	—	47.97	—	MHz	
		Mid range (DRS = 10, DMX32 = 1) 2197 × f_{fll_ref}	–	71.991	–	MHz	
J_{cyc_fll}	FLL period jitter • f_{VCO} = 75 MHz		—	180	—	ps	7
$t_{fll_acquire}$	FLL target frequency acquisition time		—	—	1	ms	8

1. This parameter is measured with the internal reference (slow clock) being used as a reference to the FLL (FEI clock mode).
2. The deviation is relative to the factory trimmed frequency at nominal V_{DD} and 25 °C, f_{ints_ft}.
3. These typical values listed are with the slow internal reference clock (FEI) using factory trim and DMX32 = 0.

4. The resulting system clock frequencies must not exceed their maximum specified values. The DCO frequency deviation (Δf_{dco_t}) over voltage and temperature must be considered.
5. These typical values listed are with the slow internal reference clock (FEI) using factory trim and DMX32 = 1.
6. The resulting clock frequency must not exceed the maximum specified clock frequency of the device.
7. This specification is based on standard deviation (RMS) of period or frequency.
8. This specification applies to any time the FLL reference source or reference divider is changed, trim value is changed, DMX32 bit is changed, DRS bits are changed, or there is a change from FLL disabled (BLPE, BLPI) to FLL enabled (FEI, FEE, FBE, FBI). If a crystal/resonator is being used as the reference, this specification assumes it is already running.

3.3.2 Oscillator electrical specifications

3.3.2.1 Oscillator DC electrical specifications

Table 15. Oscillator DC electrical specifications

Symbol	Description	Min.	Typ.	Max.	Unit	Notes
V_{DD}	Supply voltage	1.71	—	3.6	V	
I_{DDOSC}	Supply current — low-power mode (HGO=0)					1
	• 32 kHz	—	500	—	nA	
	• 4 MHz	—	200	—	µA	
	• 8 MHz	—	300	—	µA	
	• 16 MHz	—	950	—	µA	
	• 24 MHz	—	1.2	—	mA	
	• 32 MHz	—	1.5	—	mA	
I_{DDOSC}	Supply current — high gain mode (HGO=1)					1
	• 4 MHz	—	500	—	µA	
	• 8 MHz	—	600	—	µA	
	• 16 MHz	—	2.5	—	mA	
	• 24 MHz	—	3	—	mA	
	• 32 MHz	—	4	—	mA	
C_x	EXTAL load capacitance	—	—	—		2, 3
C_y	XTAL load capacitance	—	—	—		2, 3
R_F	Feedback resistor — low-frequency, low-power mode (HGO=0)	—	—	—	MΩ	2, 4
	Feedback resistor — low-frequency, high-gain mode (HGO=1)	—	10	—	MΩ	
	Feedback resistor — high-frequency, low-power mode (HGO=0)	—	—	—	MΩ	
	Feedback resistor — high-frequency, high-gain mode (HGO=1)	—	1	—	MΩ	

Table continues on the next page...

Table 15. Oscillator DC electrical specifications (continued)

Symbol	Description	Min.	Typ.	Max.	Unit	Notes
R_S	Series resistor — low-frequency, low-power mode (HGO=0)	—	—	—	kΩ	
	Series resistor — low-frequency, high-gain mode (HGO=1)	—	200	—	kΩ	
	Series resistor — high-frequency, low-power mode (HGO=0)	—	—	—	kΩ	
	Series resistor — high-frequency, high-gain mode (HGO=1)	—	0	—	kΩ	
V_{pp}[5]	Peak-to-peak amplitude of oscillation (oscillator mode) — low-frequency, low-power mode (HGO=0)	—	0.6	—	V	
	Peak-to-peak amplitude of oscillation (oscillator mode) — low-frequency, high-gain mode (HGO=1)	—	V_{DD}	—	V	
	Peak-to-peak amplitude of oscillation (oscillator mode) — high-frequency, low-power mode (HGO=0)	—	0.6	—	V	
	Peak-to-peak amplitude of oscillation (oscillator mode) — high-frequency, high-gain mode (HGO=1)	—	V_{DD}	—	V	

1. V_{DD}=3.3 V, Temperature =25 °C
2. See crystal or resonator manufacturer's recommendation
3. C_x,C_y can be provided by using the integrated capacitors when the low frequency oscillator (RANGE = 00) is used. For all other cases external capacitors must be used.
4. When low power mode is selected, R_F is integrated and must not be attached externally.
5. The EXTAL and XTAL pins should only be connected to required oscillator components and must not be connected to any other devices.

3.3.2.2 Oscillator frequency specifications

Table 16. Oscillator frequency specifications

Symbol	Description	Min.	Typ.	Max.	Unit	Notes
f_{osc_lo}	Oscillator crystal or resonator frequency — low-frequency mode (MCG_C2[RANGE]=00)	32	—	40	kHz	
$f_{osc_hi_1}$	Oscillator crystal or resonator frequency — high-frequency mode (low range) (MCG_C2[RANGE]=01)	3	—	8	MHz	
$f_{osc_hi_2}$	Oscillator crystal or resonator frequency — high frequency mode (high range) (MCG_C2[RANGE]=1x)	8	—	32	MHz	
f_{ec_extal}	Input clock frequency (external clock mode)	—	—	50	MHz	1, 2
t_{dc_extal}	Input clock duty cycle (external clock mode)	40	50	60	%	

Table continues on the next page...

Table 16. Oscillator frequency specifications (continued)

Symbol	Description	Min.	Typ.	Max.	Unit	Notes
t_{cst}	Crystal startup time — 32 kHz low-frequency, low-power mode (HGO=0)	—	1000	—	ms	3, 4
	Crystal startup time — 32 kHz low-frequency, high-gain mode (HGO=1)	—	250	—	ms	
	Crystal startup time — 8 MHz high-frequency (MCG_C2[RANGE]=01), low-power mode (HGO=0)	—	0.6	—	ms	
	Crystal startup time — 8 MHz high-frequency (MCG_C2[RANGE]=01), high-gain mode (HGO=1)	—	1	—	ms	

1. Other frequency limits may apply when external clock is being used as a reference for the FLL.
2. When transitioning from FEI or FBI to FBE mode, restrict the frequency of the input clock so that, when it is divided by FRDIV, it remains within the limits of the DCO input clock frequency.
3. Proper PC board layout procedures must be followed to achieve specifications.
4. Crystal startup time is defined as the time between the oscillator being enabled and the OSCINIT bit in the MCG_S register being set.

NOTE

The 32 kHz oscillator works in low power mode by default and cannot be moved into high power/gain mode.

3.4 Memories and memory interfaces

3.4.1 Flash electrical specifications

This section describes the electrical characteristics of the flash memory module.

3.4.1.1 Flash timing specifications — program and erase

The following specifications represent the amount of time the internal charge pumps are active and do not include command overhead.

Table 17. NVM program/erase timing specifications

Symbol	Description	Min.	Typ.	Max.	Unit	Notes
t_{hvpgm4}	Longword Program high-voltage time	—	7.5	18	µs	—
$t_{hversscr}$	Sector Erase high-voltage time	—	13	113	ms	1
$t_{hversall}$	Erase All high-voltage time	—	104	904	ms	1

1. Maximum time based on expectations at cycling end-of-life.

3.4.1.2 Flash timing specifications — commands

Table 18. Flash command timing specifications

Symbol	Description	Min.	Typ.	Max.	Unit	Notes
$t_{rd1sec2k}$	Read 1s Section execution time (flash sector)	—	—	60	µs	1
t_{pgmchk}	Program Check execution time	—	—	45	µs	1
t_{rdrsrc}	Read Resource execution time	—	—	30	µs	1
t_{pgm4}	Program Longword execution time	—	65	145	µs	—
t_{ersscr}	Erase Flash Sector execution time	—	14	114	ms	2
t_{rd1all}	Read 1s All Blocks execution time	—	—	0.9	ms	1
t_{rdonce}	Read Once execution time	—	—	30	µs	1
$t_{pgmonce}$	Program Once execution time	—	100	—	µs	—
t_{ersall}	Erase All Blocks execution time	—	140	1150	ms	2
t_{vfykey}	Verify Backdoor Access Key execution time	—	—	30	µs	1

1. Assumes 25 MHz flash clock frequency.
2. Maximum times for erase parameters based on expectations at cycling end-of-life.

3.4.1.3 Flash high voltage current behaviors

Table 19. Flash high voltage current behaviors

Symbol	Description	Min.	Typ.	Max.	Unit
I_{DD_PGM}	Average current adder during high voltage flash programming operation	—	2.5	12.0	mA
I_{DD_ERS}	Average current adder during high voltage flash erase operation	—	1.5	8.0	mA

3.4.1.4 Reliability specifications

Table 20. NVM reliability specifications

Symbol	Description	Min.	Typ.[1]	Max.	Unit	Notes
Program Flash						
$t_{nvmretp10k}$	Data retention after up to 10 K cycles	5	50	—	years	—
$t_{nvmretp1k}$	Data retention after up to 1 K cycles	20	100	—	years	—
$n_{nvmcycp}$	Cycling endurance	10 K	50 K	—	cycles	2

1. Typical data retention values are based on measured response accelerated at high temperature and derated to a constant 25 °C use profile. Engineering Bulletin EB618 does not apply to this technology. Typical endurance defined in Engineering Bulletin EB619.
2. Cycling endurance represents number of program/erase cycles at –40 °C ≤ T_j ≤ 125 °C.

3.5 Security and integrity modules

There are no specifications necessary for the device's security and integrity modules.

3.6 Analog

3.6.1 ADC electrical specifications

3.6.1.1 16-bit ADC operating conditions

Table 21. 16-bit ADC operating conditions

Symbol	Description	Conditions	Min.	Typ.[1]	Max.	Unit	Notes
V_{DDA}	Supply voltage	Absolute	1.71	—	3.6	V	
ΔV_{DDA}	Supply voltage	Delta to V_{DD} (V_{DD} – V_{DDA})	-100	0	+100	mV	2
ΔV_{SSA}	Ground voltage	Delta to V_{SS} (V_{SS} – V_{SSA})	-100	0	+100	mV	2
V_{REFH}	ADC reference voltage high		1.13	V_{DDA}	V_{DDA}	V	
V_{REFL}	ADC reference voltage low		V_{SSA}	V_{SSA}	V_{SSA}	V	
V_{ADIN}	Input voltage	• 16-bit differential mode • All other modes	VREFL VREFL	— —	31/32 * VREFH VREFH	V	
C_{ADIN}	Input capacitance	• 16-bit mode • 8-bit / 10-bit / 12-bit modes	— —	8 4	10 5	pF	
R_{ADIN}	Input resistance		—	2	5	kΩ	
R_{AS}	Analog source resistance	13-bit / 12-bit modes f_{ADCK} < 4 MHz	—	—	5	kΩ	3
f_{ADCK}	ADC conversion clock frequency	≤ 13-bit mode	1.0	—	24.0	MHz	4
f_{ADCK}	ADC conversion clock frequency	16-bit mode	2.0	—	12.0	MHz	4
C_{rate}	ADC conversion rate	≤ 13-bit modes No ADC hardware averaging Continuous conversions enabled, subsequent conversion time	20.000	—	1200	Ksps	5

Table continues on the next page...

Table 21. 16-bit ADC operating conditions (continued)

Symbol	Description	Conditions	Min.	Typ.[1]	Max.	Unit	Notes
C_{rate}	ADC conversion rate	16-bit mode No ADC hardware averaging Continuous conversions enabled, subsequent conversion time	37.037	—	461.467	Ksps	5

1. Typical values assume V_{DDA} = 3.0 V, Temp = 25 °C, f_{ADCK} = 1.0 MHz, unless otherwise stated. Typical values are for reference only, and are not tested in production.
2. DC potential difference.
3. This resistance is external to MCU. To achieve the best results, the analog source resistance must be kept as low as possible. The results in this data sheet were derived from a system that had < 8 Ω analog source resistance. The R_{AS}/C_{AS} time constant should be kept to < 1 ns.
4. To use the maximum ADC conversion clock frequency, CFG2[ADHSC] must be set and CFG1[ADLPC] must be clear.
5. For guidelines and examples of conversion rate calculation, download the ADC calculator tool.

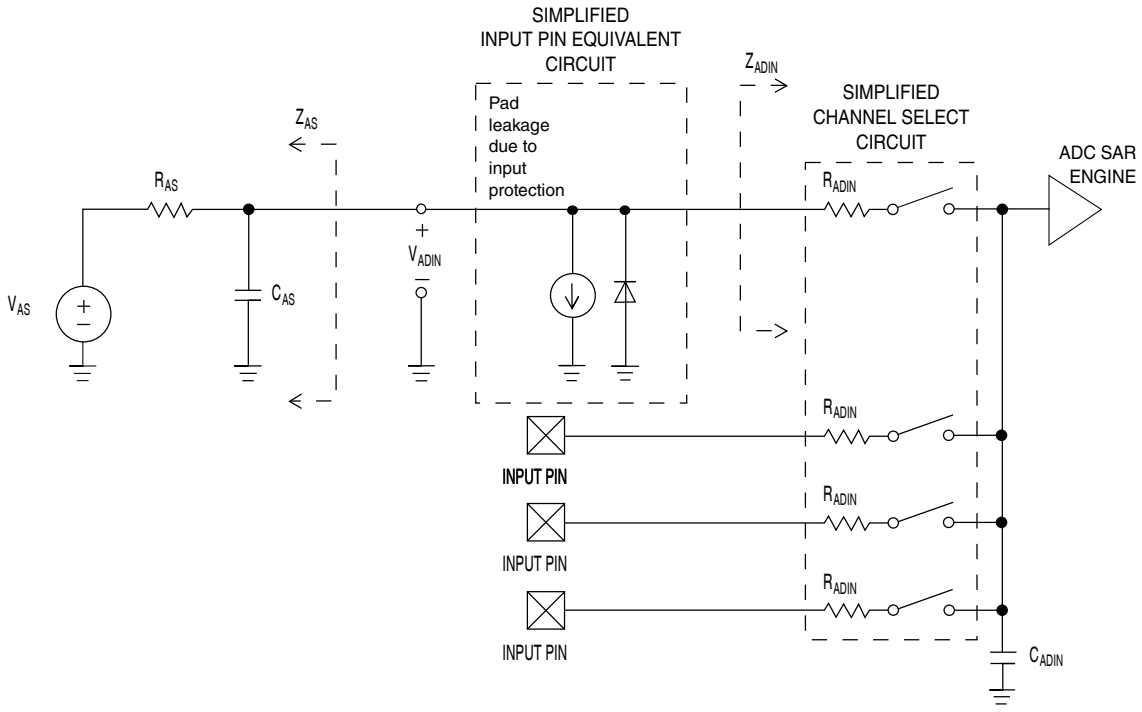

Figure 7. ADC input impedance equivalency diagram

3.6.1.2 16-bit ADC electrical characteristics

Table 22. 16-bit ADC characteristics (V_{REFH} = V_{DDA}, V_{REFL} = V_{SSA})

Symbol	Description	Conditions[1].	Min.	Typ.[2]	Max.	Unit	Notes
I_{DDA_ADC}	Supply current		0.215	—	1.7	mA	3

Table continues on the next page...

Table 22. 16-bit ADC characteristics ($V_{REFH} = V_{DDA}$, $V_{REFL} = V_{SSA}$) (continued)

Symbol	Description	Conditions[1].	Min.	Typ.[2]	Max.	Unit	Notes
f_{ADACK}	ADC asynchronous clock source	• ADLPC = 1, ADHSC = 0 • ADLPC = 1, ADHSC = 1 • ADLPC = 0, ADHSC = 0 • ADLPC = 0, ADHSC = 1	1.2 2.4 3.0 4.4	2.4 4.0 5.2 6.2	3.9 6.1 7.3 9.5	MHz MHz MHz MHz	$t_{ADACK} = 1/f_{ADACK}$
	Sample Time	See Reference Manual chapter for sample times					
TUE	Total unadjusted error	• 12-bit modes • <12-bit modes	— —	±4 ±1.4	±6.8 ±2.1	LSB[4]	5
DNL	Differential non-linearity	• 12-bit modes • <12-bit modes	— —	±0.7 ±0.2	–1.1 to +1.9 –0.3 to 0.5	LSB[4]	5
INL	Integral non-linearity	• 12-bit modes • <12-bit modes	— —	±1.0 ±0.5	–2.7 to +1.9 –0.7 to +0.5	LSB[4]	5
E_{FS}	Full-scale error	• 12-bit modes • <12-bit modes	— —	–4 –1.4	–5.4 –1.8	LSB[4]	$V_{ADIN} = V_{DDA}$[5]
E_Q	Quantization error	• 16-bit modes • ≤13-bit modes	— —	–1 to 0 —	— ±0.5	LSB[4]	
ENOB	Effective number of bits	16-bit differential mode • Avg = 32 • Avg = 4 16-bit single-ended mode • Avg = 32 • Avg = 4	 12.8 11.9 12.2 11.4	 14.5 13.8 13.7 13.1	 — — — —	 bits bits bits bits	6, 7
SINAD	Signal-to-noise plus distortion	See ENOB	6.02 × ENOB + 1.76			dB	7
THD	Total harmonic distortion	16-bit differential mode • Avg = 32 16-bit single-ended mode • Avg = 32	 — —	 –97 –91	 — —	 dB dB	7, 8
SFDR	Spurious free dynamic range	16-bit differential mode	82	100	—	dB	7, 8

Table continues on the next page...

Table 22. 16-bit ADC characteristics ($V_{REFH} = V_{DDA}$, $V_{REFL} = V_{SSA}$) (continued)

Symbol	Description	Conditions[1].	Min.	Typ.[2]	Max.	Unit	Notes
		• Avg = 32 16-bit single-ended mode • Avg = 32	78	92	—	dB	
E_{IL}	Input leakage error		$I_{In} \times R_{AS}$			mV	I_{In} = leakage current (refer to the MCU's voltage and current operating ratings)
	Temp sensor slope	Across the full temperature range of the device	1.55	1.62	1.69	mV/°C	9
V_{TEMP25}	Temp sensor voltage	25 °C	706	716	726	mV	9

1. All accuracy numbers assume the ADC is calibrated with $V_{REFH} = V_{DDA}$
2. Typical values assume V_{DDA} = 3.0 V, Temp = 25 °C, f_{ADCK} = 2.0 MHz unless otherwise stated. Typical values are for reference only and are not tested in production.
3. The ADC supply current depends on the ADC conversion clock speed, conversion rate and ADC_CFG1[ADLPC] (low power). For lowest power operation, ADC_CFG1[ADLPC] must be set, the ADC_CFG2[ADHSC] bit must be clear with 1 MHz ADC conversion clock speed.
4. 1 LSB = $(V_{REFH} - V_{REFL})/2^N$
5. ADC conversion clock < 16 MHz, Max hardware averaging (AVGE = %1, AVGS = %11)
6. Input data is 100 Hz sine wave. ADC conversion clock < 12 MHz.
7. This data was collected with an external clock.
8. Input data is 1 kHz sine wave. ADC conversion clock < 12 MHz.
9. ADC conversion clock < 3 MHz

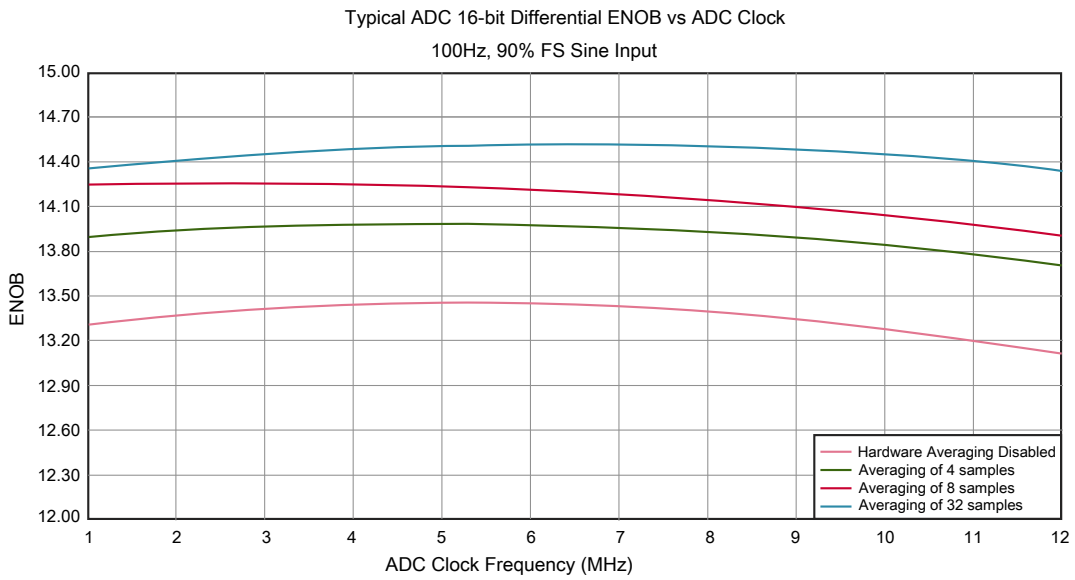

Figure 8. Typical ENOB vs. ADC_CLK for 16-bit differential mode

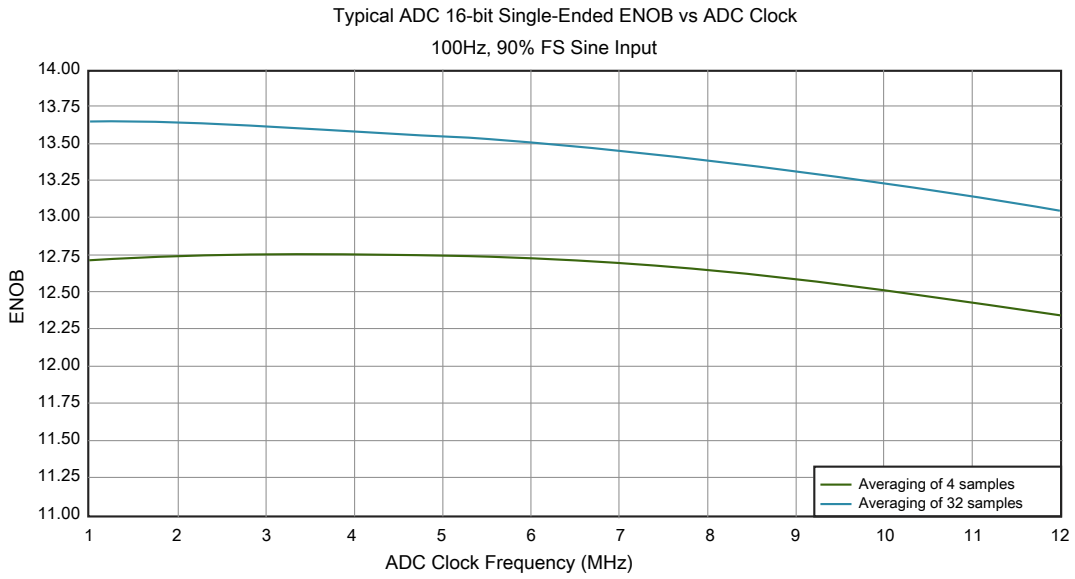

Figure 9. Typical ENOB vs. ADC_CLK for 16-bit single-ended mode

3.6.2 CMP and 6-bit DAC electrical specifications

Table 23. Comparator and 6-bit DAC electrical specifications

Symbol	Description	Min.	Typ.	Max.	Unit
V_{DD}	Supply voltage	1.71	—	3.6	V

Table continues on the next page...

Table 23. Comparator and 6-bit DAC electrical specifications (continued)

Symbol	Description	Min.	Typ.	Max.	Unit
I_{DDHS}	Supply current, high-speed mode (EN = 1, PMODE = 1)	—	—	200	µA
I_{DDLS}	Supply current, low-speed mode (EN = 1, PMODE = 0)	—	—	20	µA
V_{AIN}	Analog input voltage	V_{SS}	—	V_{DD}	V
V_{AIO}	Analog input offset voltage	—	—	20	mV
V_H	Analog comparator hysteresis[1]				
	• CR0[HYSTCTR] = 00	—	5	—	mV
	• CR0[HYSTCTR] = 01	—	10	—	mV
	• CR0[HYSTCTR] = 10	—	20	—	mV
	• CR0[HYSTCTR] = 11	—	30	—	mV
V_{CMPOh}	Output high	V_{DD} – 0.5	—	—	V
V_{CMPOl}	Output low	—	—	0.5	V
t_{DHS}	Propagation delay, high-speed mode (EN = 1, PMODE = 1)	20	35	200	ns
t_{DLS}	Propagation delay, low-speed mode (EN = 1, PMODE = 0)	80	100	600	ns
	Analog comparator initialization delay[2]	—	—	40	µs
I_{DAC6b}	6-bit DAC current adder (enabled)	—	7	—	µA
INL	6-bit DAC integral non-linearity	–0.5	—	0.5	LSB[3]
DNL	6-bit DAC differential non-linearity	–0.3	—	0.3	LSB

1. Typical hysteresis is measured with input voltage range limited to 0.7 to V_{DD} – 0.7 V.
2. Comparator initialization delay is defined as the time between software writes to change control inputs (writes to DACEN, VRSEL, PSEL, MSEL, VOSEL) and the comparator output settling to a stable level.
3. 1 LSB = $V_{reference}/64$

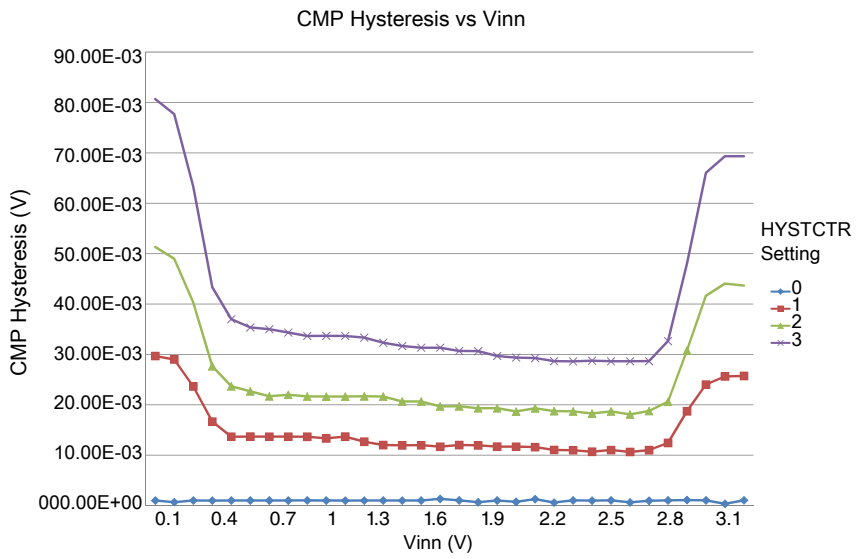

Figure 10. Typical hysteresis vs. Vin level (V_{DD} = 3.3 V, PMODE = 0)

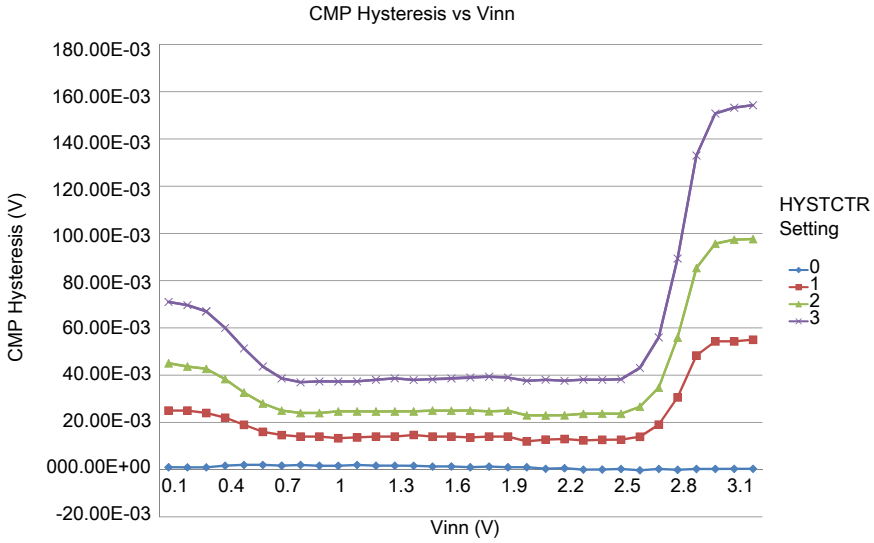

Figure 11. Typical hysteresis vs. Vin level (V_{DD} = 3.3 V, PMODE = 1)

3.6.3 12-bit DAC electrical characteristics

3.6.3.1 12-bit DAC operating requirements

Table 24. 12-bit DAC operating requirements

Symbol	Desciption	Min.	Max.	Unit	Notes
V_{DDA}	Supply voltage	1.71	3.6	V	
V_{DACR}	Reference voltage	1.13	3.6	V	1
C_L	Output load capacitance	—	100	pF	2
I_L	Output load current	—	1	mA	

1. The DAC reference can be selected to be V_{DDA} or V_{REFH}.
2. A small load capacitance (47 pF) can improve the bandwidth performance of the DAC.

3.6.3.2 12-bit DAC operating behaviors

Table 25. 12-bit DAC operating behaviors

Symbol	Description	Min.	Typ.	Max.	Unit	Notes
I_{DDA_DACLP}	Supply current — low-power mode	—	—	150	µA	
I_{DDA_DACHP}	Supply current — high-speed mode	—	—	700	µA	
t_{DACLP}	Full-scale settling time (0x080 to 0xF7F) — low-power mode	—	100	200	µs	1
t_{DACHP}	Full-scale settling time (0x080 to 0xF7F) — high-power mode	—	15	30	µs	1
$t_{CCDACLP}$	Code-to-code settling time (0xBF8 to 0xC08)—high-speed mode	—	1	—	µs	1
	—low-power mode	—	—	5	µs	1
$V_{dacoutl}$	DAC output voltage range low — high-speed mode, no load, DAC set to 0x000	—	—	100	mV	
$V_{dacouth}$	DAC output voltage range high — high-speed mode, no load, DAC set to 0xFFF	V_{DACR} −100	—	V_{DACR}	mV	
INL	Integral non-linearity error — high speed mode	—	—	±8	LSB	2
DNL	Differential non-linearity error — V_{DACR} > 2 V	—	—	±1	LSB	3
DNL	Differential non-linearity error — V_{DACR} = VREF_OUT	—	—	±1	LSB	4
V_{OFFSET}	Offset error	—	±0.4	±0.8	%FSR	5
E_G	Gain error	—	±0.1	±0.6	%FSR	5
PSRR	Power supply rejection ratio, V_{DDA} ≥ 2.4 V	60	—	90	dB	
T_{CO}	Temperature coefficient offset voltage	—	3.7	—	µV/C	6
T_{GE}	Temperature coefficient gain error	—	0.000421	—	%FSR/C	
Rop	Output resistance (load = 3 kΩ)	—	—	250	Ω	
SR	Slew rate -80h→ F7Fh→ 80h				V/µs	

Table continues on the next page...

Table 25. 12-bit DAC operating behaviors (continued)

Symbol	Description	Min.	Typ.	Max.	Unit	Notes
	• High power (SP_{HP})	1.2	1.7	—		
	• Low power (SP_{LP})	0.05	0.12	—		
BW	3dB bandwidth				kHz	
	• High power (SP_{HP})	550	—	—		
	• Low power (SP_{LP})	40	—	—		

1. Settling within ±1 LSB
2. The INL is measured for 0 + 100 mV to V_{DACR} −100 mV
3. The DNL is measured for 0 + 100 mV to V_{DACR} −100 mV
4. The DNL is measured for 0 + 100 mV to V_{DACR} −100 mV with V_{DDA} > 2.4 V
5. Calculated by a best fit curve from V_{SS} + 100 mV to V_{DACR} − 100 mV
6. V_{DDA} = 3.0 V, reference select set for V_{DDA} (DACx_CO:DACRFS = 1), high power mode (DACx_C0:LPEN = 0), DAC set to 0x800, temperature range is across the full range of the device

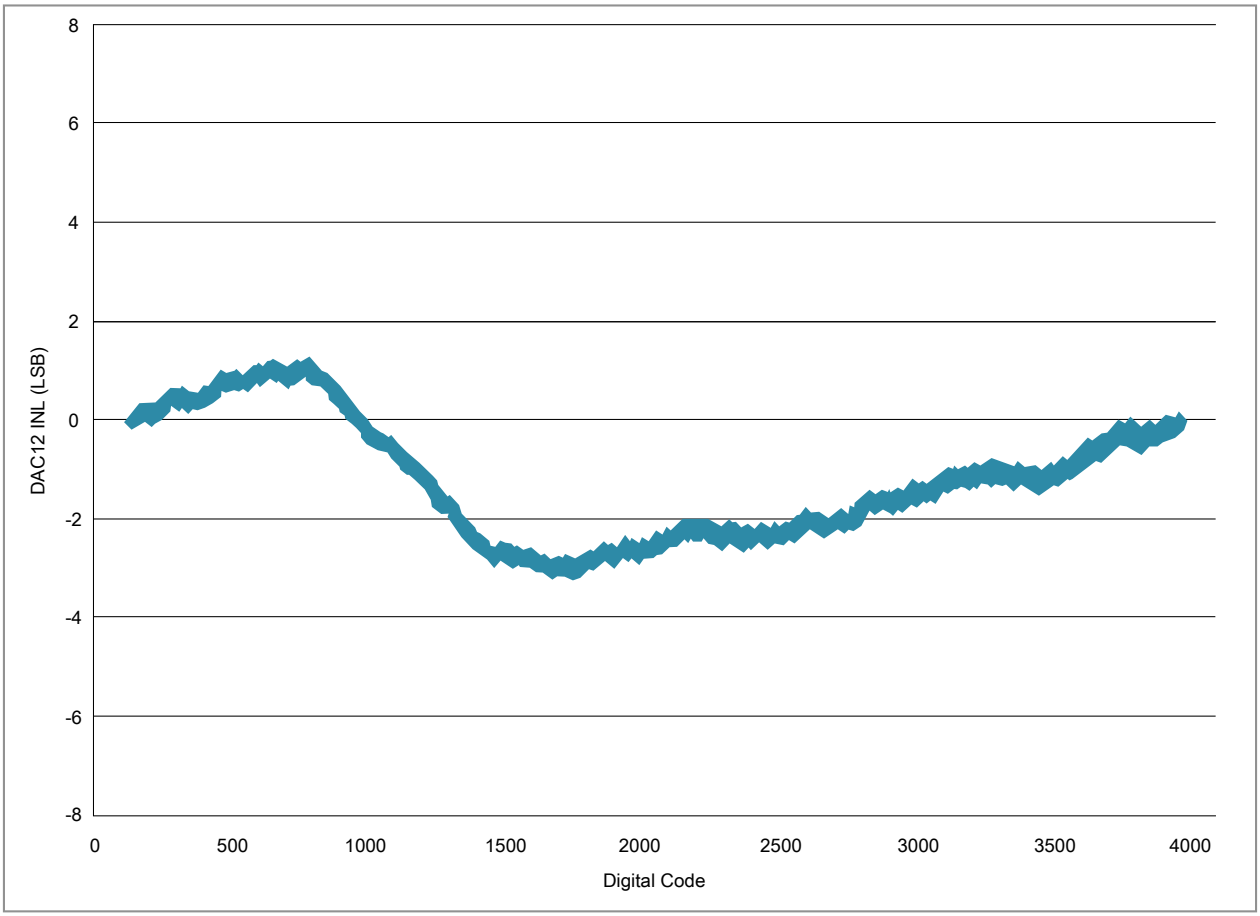

Figure 12. Typical INL error vs. digital code

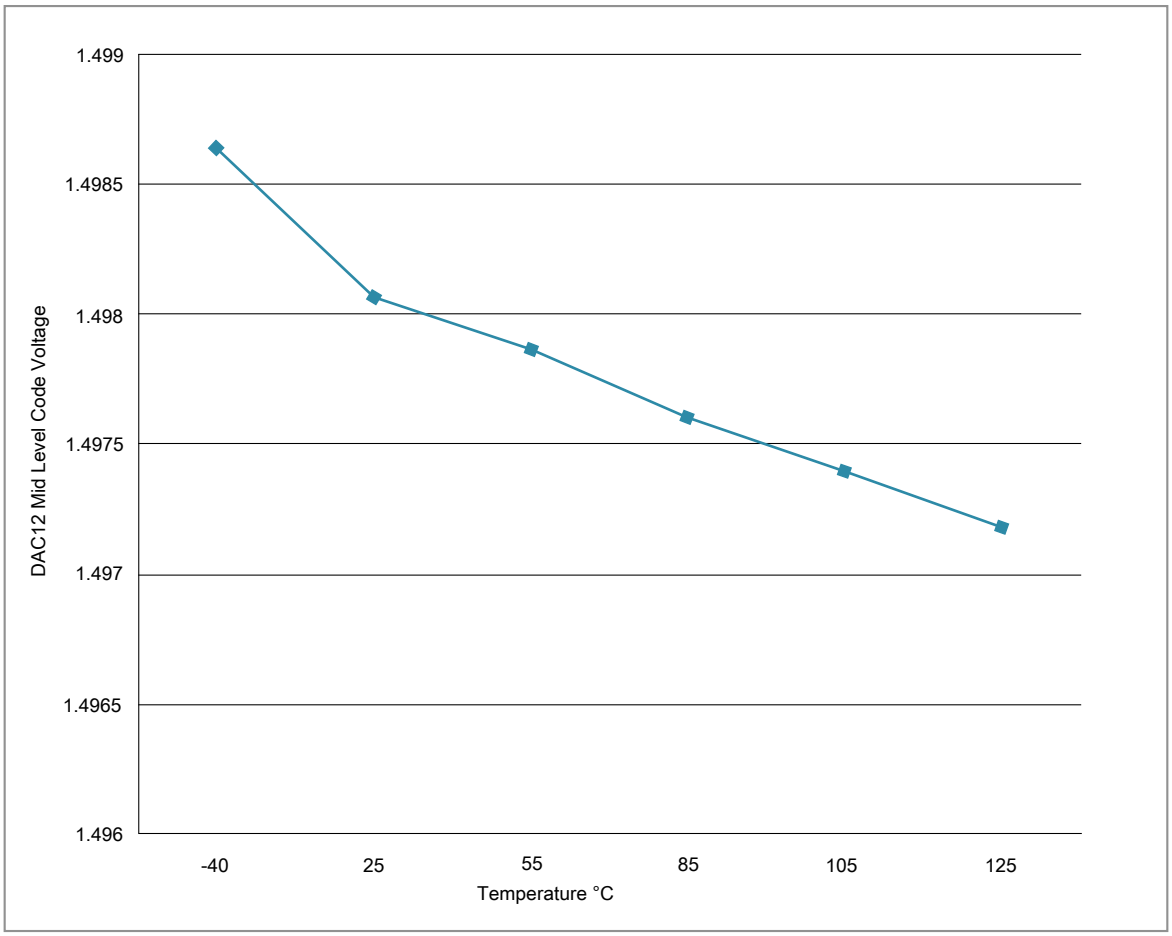

Figure 13. Offset at half scale vs. temperature

3.7 Timers

See General switching specifications.

3.8 Communication interfaces

3.8.1 DSPI switching specifications (limited voltage range)

The DMA Serial Peripheral Interface (DSPI) provides a synchronous serial bus with master and slave operations. Many of the transfer attributes are programmable. The tables below provide DSPI timing characteristics for classic SPI timing modes. Refer to the DSPI chapter of the Reference Manual for information on the modified transfer formats used for communicating with slower peripheral devices.

Table 26. Master mode DSPI timing (limited voltage range)

Symbol	Description	Min.	Max.	Unit	Notes
	Operating voltage	2.7	3.6	V	
	Frequency of operation		**25**	**MHz**	1
DS1	DSPI_SCK output cycle time	2 x t_{BUS}	–	ns	2
DS2	DSPI_SCK output high/low time	(t_{SCK}/2) – 2	(t_{SCK}/2) + 2	ns	
DS3	DSPI_PCS*n* valid to DSPI_SCK delay	(t_{SCK}/2) – 2	–	ns	3
DS4	DSPI_SCK to DSPI_PCS*n* invalid delay	(t_{SCK}/2) – 2	–	ns	4
DS5	DSPI_SCK to DSPI_SOUT valid	–	8.7	ns	
DS6	DSPI_SCK to DSPI_SOUT invalid	–2	–	ns	
DS7	DSPI_SIN to DSPI_SCK input setup	17	–	ns	
DS8	DSPI_SCK to DSPI_SIN input hold	0	–	ns	
	Frequency of operation	–	**25**	**MHz**	5
DS1	DSPI_SCK output cycle time	2 x t_{BUS}	–	ns	2
DS2	DSPI_SCK output high/low time	(t_{SCK}/2) – 2	(t_{SCK}/2) + 2	ns	
DS3	DSPI_PCS*n* valid to DSPI_SCK delay	(t_{SCK}/2) – 2	–	ns	3
DS4	DSPI_SCK to DSPI_PCS*n* invalid delay	(t_{SCK}/2) – 2	–	ns	4
DS5	DSPI_SCK to DSPI_SOUT valid	–	14.7	ns	
DS6	DSPI_SCK to DSPI_SOUT invalid	–2	–	ns	
DS7	DSPI_SIN to DSPI_SCK input setup	17	–	ns	
DS8	DSPI_SCK to DSPI_SIN input hold	0	–	ns	
	Frequency of operation	–	**37.5**	**MHz**	6
DS1	DSPI_SCK output cycle time	2 x t_{BUS}	–	ns	2
DS2	DSPI_SCK output high/low time	(t_{SCK}/2) – 2	(t_{SCK}/2) + 2	ns	
DS3	DSPI_PCS*n* valid to DSPI_SCK delay	(t_{SCK}/2) – 2	–	ns	3
DS4	DSPI_SCK to DSPI_PCS*n* invalid delay	(t_{SCK}/2) – 2	–	ns	4
DS5	DSPI_SCK to DSPI_SOUT valid	–	8.7	ns	

Table continues on the next page...

Table 26. Master mode DSPI timing (limited voltage range) (continued)

Symbol	Description	Min.	Max.	Unit	Notes
DS6	DSPI_SCK to DSPI_SOUT invalid	–2	–	ns	
DS7	DSPI_SIN to DSPI_SCK input setup	13	–	ns	
DS8	DSPI_SCK to DSPI_SIN input hold	0	–	ns	

1. Normal pads
2. The SPI module is clocked by the system clock
3. The delay is programmable in SPIx_CTARn[PSSCK] and SPIx_CTARn[CSSCK].
4. The delay is programmable in SPIx_CTARn[PASC] and SPIx_CTARn[ASC].
5. Open Drain pads: SIN: PTC7, SOUT:PTC6
6. Fast pads: SIN: PTD7, SOUT:PTD6, SCK: PTD5, PCS:PTD4

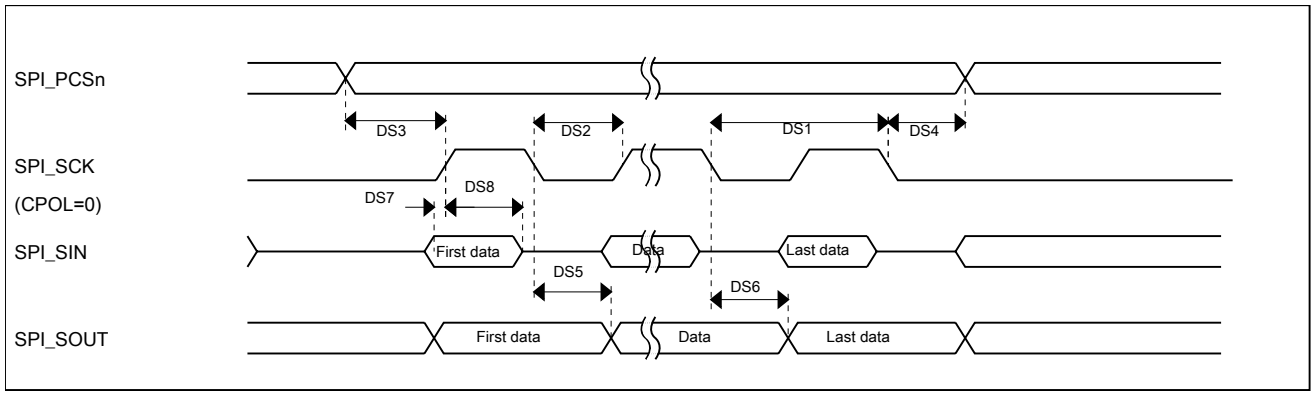

Figure 14. DSPI classic SPI timing — master mode

Table 27. Slave mode DSPI timing (limited voltage range)

Symbol	Description	Min.	Max.	Unit	Notes
	Operating voltage	2.7	3.6	V	
	Frequency of operation	–	**12.5**	**MHz**	1
DS9	DSPI_SCK input cycle time	4 x t_{BUS}	–	ns	2
DS10	DSPI_SCK input high/low time	(t_{SCK}/2) – 2	(t_{SCK}/2) + 2	ns	
DS11	DSPI_SCK to DSPI_SOUT valid	–	21	ns	
DS12	DSPI_SCK to DSPI_SOUT invalid	0	–	ns	
DS13	DSPI_SIN to DSPI_SCK input setup	2.2	–	ns	
DS14	DSPI_SCK to DSPI_SIN input hold	7	–	ns	
DS15	$\overline{\text{DSPI_SS}}$ active to DSPI_SOUT driven	–	15	ns	
DS16	$\overline{\text{DSPI_SS}}$ inactive to DSPI_SOUT not driven	–	15	ns	
	Frequency of operation	–	**12.5**	**MHz**	3
DS9	DSPI_SCK input cycle time	4 x t_{BUS}	—	ns	2
DS10	DSPI_SCK input high/low time	(t_{SCK}/2) – 2	(t_{SCK}/2) + 2	ns	

Table continues on the next page...

Table 27. Slave mode DSPI timing (limited voltage range) (continued)

Symbol	Description	Min.	Max.	Unit	Notes
DS11	DSPI_SCK to DSPI_SOUT valid	–	27	ns	
DS12	DSPI_SCK to DSPI_SOUT invalid	0	–	ns	
DS13	DSPI_SIN to DSPI_SCK input setup	2.2	–	ns	
DS14	DSPI_SCK to DSPI_SIN input hold	7	–	ns	
DS15	$\overline{\text{DSPI_SS}}$ active to DSPI_SOUT driven	–	15	ns	
DS16	$\overline{\text{DSPI_SS}}$ inactive to DSPI_SOUT not driven	–	21	ns	
	Frequency of operation	–	**18.75**	**MHz**	4
DS9	DSPI_SCK input cycle time	4 x t_{BUS}	—	ns	2
DS10	DSPI_SCK input high/low time	(t_{SCK}/2) – 2	(t_{SCK}/2) + 2	ns	
DS11	DSPI_SCK to DSPI_SOUT valid	–	17	ns	
DS12	DSPI_SCK to DSPI_SOUT invalid	0	–	ns	
DS13	DSPI_SIN to DSPI_SCK input setup	2.2	–	ns	
DS14	DSPI_SCK to DSPI_SIN input hold	7	–	ns	
DS15	$\overline{\text{DSPI_SS}}$ active to DSPI_SOUT driven	–	15	ns	
DS16	$\overline{\text{DSPI_SS}}$ inactive to DSPI_SOUT not driven	–	11	ns	

1. Normal pads
2. The SPI module is clocked by the system clock
3. Open Drain pads: SIN: PTC7, SOUT:PTC6
4. Fast pads: SIN: PTD7, SOUT:PTD6, SCK: PTD5, PCS:PTD4

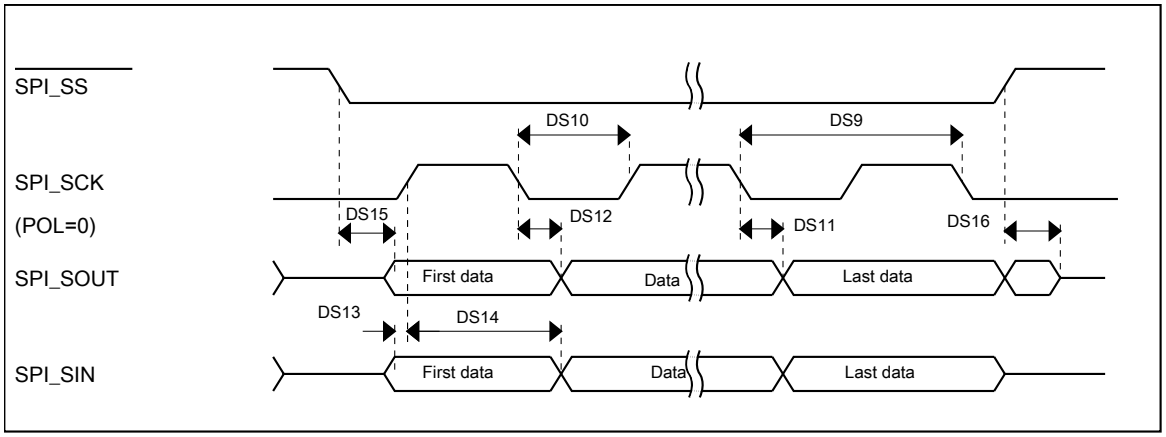

Figure 15. DSPI classic SPI timing — slave mode

3.8.2 DSPI switching specifications (full voltage range)

The DMA Serial Peripheral Interface (DSPI) provides a synchronous serial bus with master and slave operations. Many of the transfer attributes are programmable. The tables below provides DSPI timing characteristics for classic SPI timing modes. Refer to the DSPI chapter of the Reference Manual for information on the modified transfer formats used for communicating with slower peripheral devices.

Table 28. Master mode DSPI timing (full voltage range)

Symbol	Description	Min.	Max.	Unit	Notes
	Operating voltage	1.7	3.6	V	1
	Frequency of operation	–	**18.75**	**MHz**	2
DS1	DSPI_SCK output cycle time	2 x t_{BUS}	–	ns	3
DS2	DSPI_SCK output high/low time	(t_{SCK}/2) – 4	(t_{SCK}/2) + 4	ns	
DS3	DSPI_PCS*n* valid to DSPI_SCK delay	(t_{SCK}/2) – 4	–	ns	4
DS4	DSPI_SCK to DSPI_PCS*n* invalid delay	(t_{SCK}/2) – 4	–	ns	5
DS5	DSPI_SCK to DSPI_SOUT valid	–	10		
DS6	DSPI_SCK to DSPI_SOUT invalid	–7.8	–	ns	
DS7	DSPI_SIN to DSPI_SCK input setup	24	–	ns	
DS8	DSPI_SCK to DSPI_SIN input hold	0	–	ns	
	Frequency of operation	–	**18.75**	**MHz**	6
DS1	DSPI_SCK output cycle time	2 x t_{BUS}	–	ns	3
DS2	DSPI_SCK output high/low time	(t_{SCK}/2) – 4	(t_{SCK}/2) + 4	ns	
DS3	DSPI_PCS*n* valid to DSPI_SCK delay	(t_{SCK}/2) – 4	–	ns	4
DS4	DSPI_SCK to DSPI_PCS*n* invalid delay	(t_{SCK}/2) – 4	–	ns	5
DS5	DSPI_SCK to DSPI_SOUT valid	–	26		
DS6	DSPI_SCK to DSPI_SOUT invalid	–7.8	–	ns	
DS7	DSPI_SIN to DSPI_SCK input setup	24	–	ns	
DS8	DSPI_SCK to DSPI_SIN input hold	0	–	ns	

Table continues on the next page...

Table 28. Master mode DSPI timing (full voltage range) (continued)

Symbol	Description	Min.	Max.	Unit	Notes
	Frequency of operation	–	**25**	**MHz**	7
DS1	DSPI_SCK output cycle time	2 x t_{BUS}	–	ns	3
DS2	DSPI_SCK output high/low time	(t_{SCK}/2) – 4	(t_{SCK}/2) + 4	ns	
DS3	DSPI_PCS*n* valid to DSPI_SCK delay	(t_{SCK}/2) – 4	–	ns	4
DS4	DSPI_SCK to DSPI_PCS*n* invalid delay	(t_{SCK}/2) – 4	–	ns	5
DS5	DSPI_SCK to DSPI_SOUT valid	–	10		
DS6	DSPI_SCK to DSPI_SOUT invalid	–7.8	–	ns	
DS7	DSPI_SIN to DSPI_SCK input setup	17	–	ns	
DS8	DSPI_SCK to DSPI_SIN input hold	0	–	ns	

1. The DSPI module can operate across the entire operating voltage for the processor, but to run across the full voltage range the maximum frequency of operation is reduced.
2. Normal pads
3. The SPI module is clocked by the system clock
4. The delay is programmable in SPIx_CTARn[PSSCK] and SPIx_CTARn[CSSCK].
5. The delay is programmable in SPIx_CTARn[PASC] and SPIx_CTARn[ASC]
6. Open Drain pads: SIN: PTC7, SOUT:PTC6
7. Fast pads: SIN: PTD7, SOUT:PTD6, SCK: PTD5, PCS:PTD4

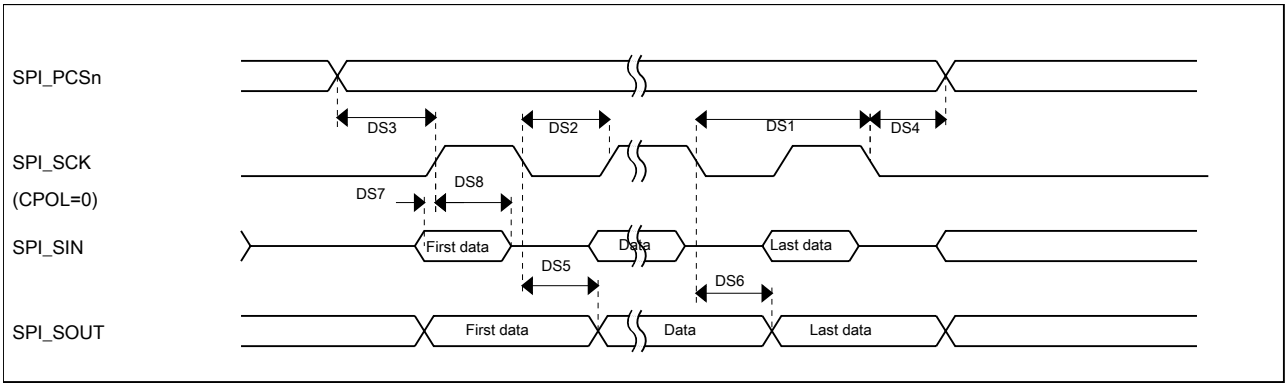

Figure 16. DSPI classic SPI timing — master mode

Table 29. Slave mode DSPI timing (full voltage range)

Symbol	Description	Min.	Max.	Unit	Notes
	Operating voltage	1.7	3.6	V	
	Frequency of operation	–	**9.375**	**MHz**	1

Table continues on the next page...

Table 29. Slave mode DSPI timing (full voltage range) (continued)

Symbol	Description	Min.	Max.	Unit	Notes
DS9	DSPI_SCK input cycle time	4 x t_{BUS}	—	ns	2
DS10	DSPI_SCK input high/low time	(t_{SCK}/2) – 4	(t_{SCK}/2) + 4	ns	
DS11	DSPI_SCK to DSPI_SOUT valid	–	27.8	ns	
DS12	DSPI_SCK to DSPI_SOUT invalid	0	–	ns	
DS13	DSPI_SIN to DSPI_SCK input setup	2.7	–	ns	
DS14	DSPI_SCK to DSPI_SIN input hold	7	–	ns	
DS15	$\overline{\text{DSPI_SS}}$ active to DSPI_SOUT driven	–	22	ns	
DS16	$\overline{\text{DSPI_SS}}$ inactive to DSPI_SOUT not driven	–	22	ns	
	Frequency of operation	–	**9.375**	**MHz**	3
DS9	DSPI_SCK input cycle time	4 x t_{BUS}	—	ns	2
DS10	DSPI_SCK input high/low time	(t_{SCK}/2) – 4	(t_{SCK}/2) + 4	ns	
DS11	DSPI_SCK to DSPI_SOUT valid	–	43.8	ns	
DS12	DSPI_SCK to DSPI_SOUT invalid	0	–	ns	
DS13	DSPI_SIN to DSPI_SCK input setup	2.7	–	ns	
DS14	DSPI_SCK to DSPI_SIN input hold	7	–	ns	
DS15	$\overline{\text{DSPI_SS}}$ active to DSPI_SOUT driven	–	22	ns	
DS16	$\overline{\text{DSPI_SS}}$ inactive to DSPI_SOUT not driven	–	38	ns	
	Frequency of operation		**12.5**	**MHz**	4
DS9	DSPI_SCK input cycle time	4 x t_{BUS}	—	ns	2
DS10	DSPI_SCK input high/low time	(t_{SCK}/2) – 4	(t_{SCK}/2) + 4	ns	
DS11	DSPI_SCK to DSPI_SOUT valid	–	20.8	ns	
DS12	DSPI_SCK to DSPI_SOUT invalid	0	–	ns	
DS13	DSPI_SIN to DSPI_SCK input setup	2.7	–	ns	
DS14	DSPI_SCK to DSPI_SIN input hold	7	–	ns	
DS15	$\overline{\text{DSPI_SS}}$ active to DSPI_SOUT driven	–	22	ns	
DS16	$\overline{\text{DSPI_SS}}$ inactive to DSPI_SOUT not driven	–	15	ns	

1. Normal pads
2. The SPI module is clocked by the system clock
3. Open Drain pads: SIN: PTC7, SOUT:PTC6
4. Fast pads: SIN: PTD7, SOUT:PTD6, SCK: PTD5, PCS:PTD4

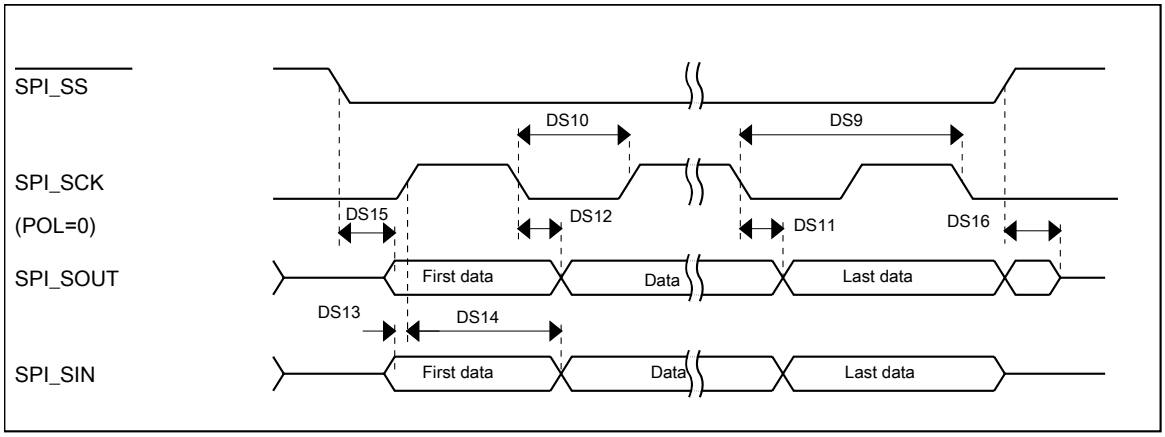

Figure 17. DSPI classic SPI timing — slave mode

3.8.3 I²C

See General switching specifications.

3.8.4 UART

See General switching specifications.

4 Dimensions

4.1 Obtaining package dimensions

Package dimensions are provided in package drawings.

To find a package drawing, go to www.nxp.com and perform a keyword search for the drawing's document number:

If you want the drawing for this package	Then use this document number
32-pin QFN	98ASA00473D
32-pin LQFP [1]	98ASH70029A
48-pin LQFP	98ASH00962A
64-pin LQFP	98ASS23234W

1. The 32-pin LQFP package for this product is not yet available, however it is included in a Package Your Way program for Kinetis MCUs. Please visit http://www.nxp.com/KPYW for more details.

5 Pinout

5.1 KV11 Signal Multiplexing and Pin Assignments

The following table shows the signals available on each pin and the locations of these pins on the devices supported by this document. The Port Control Module is responsible for selecting which ALT functionality is available on each pin.

NOTE

- PTB0, PTB1, PTC3, PTC4, PTD4, PTD5, PTD6, PTD7 are high current pins.
- PTC6 and PTC7 have open drain outputs

64 LQFP	48 QFP	32 QFN	32 LQFP	Pin Name	DEFAULT	ALT0	ALT1	ALT2	ALT3	ALT4	ALT5	ALT6	ALT7
—	—	7	7	VDDA/ VREFH	VDDA/ VREFH	VDDA/ VREFH							
—	—	8	8	VREFL/ VSSA	VREFL/ VSSA	VREFL/ VSSA							
1	—	—	—	PTE0	ADC1_SE12	ADC1_SE12	PTE0		UART1_TX				
2	—	—	—	PTE1/ LLWU_P0	ADC1_SE13	ADC1_SE13	PTE1/ LLWU_P0		UART1_RX				
3	1	1	1	VDD	VDD	VDD							
4	2	2	2	VSS	VSS	VSS							
5	3	3	3	PTE16	ADC0_SE1/ ADC0_DP1/ ADC1_SE0	ADC0_SE1/ ADC0_DP1/ ADC1_SE0	PTE16	SPI0_PCS0	UART1_TX	FTM_ CLKIN0		FTM0_FLT3	
6	4	4	4	PTE17/ LLWU_P19	ADC0_DM1/ ADC0_SE5/ ADC1_SE5	ADC0_DM1/ ADC0_SE5/ ADC1_SE5	PTE17/ LLWU_P19	SPI0_SCK	UART1_RX	FTM_ CLKIN1		LPTMR0_ ALT3	
7	5	5	5	PTE18/ LLWU_P20	ADC0_SE6/ ADC1_SE1/ ADC1_DP1	ADC0_SE6/ ADC1_SE1/ ADC1_DP1	PTE18/ LLWU_P20	SPI0_SOUT	UART1_ CTS_b	I2C0_SDA		SPI0_SIN	
8	6	6	6	PTE19	ADC0_SE7/ ADC1_SE7/ ADC1_DM1	ADC0_SE7/ ADC1_SE7/ ADC1_DM1	PTE19	SPI0_SIN	UART1_ RTS_b	I2C0_SCL		SPI0_SOUT	
9	7	—	—	PTE20	ADC0_SE0/ ADC0_DP0	ADC0_SE0/ ADC0_DP0	PTE20		FTM1_CH0	UART0_TX			
10	8	—	—	PTE21	ADC0_SE4/ ADC0_DM0	ADC0_SE4/ ADC0_DM0	PTE21		FTM1_CH1	UART0_RX			
11	—	—	—	PTE22	ADC0_SE12	ADC0_SE12	PTE22						
12	—	—	—	PTE23	ADC0_SE13	ADC0_SE13	PTE23						
13	9	—	—	VDDA	VDDA	VDDA							

64 LQFP	48 QFP	32 QFN	32 LQFP	Pin Name	DEFAULT	ALT0	ALT1	ALT2	ALT3	ALT4	ALT5	ALT6	ALT7
14	10	—	—	VREFH	VREFH	VREFH							
15	11	—	—	VREFL	VREFL	VREFL							
16	12	—	—	VSSA	VSSA	VSSA							
17	13	—	—	PTE29	CMP1_IN5/ CMP0_IN5	CMP1_IN5/ CMP0_IN5	PTE29		FTM0_CH2		FTM_ CLKIN0		
18	14	9	9	PTE30	ADC1_SE4/ CMP1_IN4/ DAC0_OUT	ADC1_SE4/ CMP1_IN4/ DAC0_OUT	PTE30		FTM0_CH3		FTM_ CLKIN1		
19	—	—	—	PTE31	ADC0_SE14/ CMP0_IN4	ADC0_SE14/ CMP0_IN4	PTE31						
20	15	10	10	PTE24	DISABLED		PTE24	CAN0_TX	FTM0_CH0		I2C0_SCL	EWM_OUT_ b	
21	16	11	11	PTE25/ LLWU_P21	DISABLED		PTE25/ LLWU_P21	CAN0_RX	FTM0_CH1		I2C0_SDA	EWM_IN	
22	17	12	12	PTA0	SWD_CLK	SWD_CLK	PTA0	UART0_ CTS_b	FTM0_CH5		EWM_IN		SWD_CLK
23	18	13	13	PTA1	DISABLED		PTA1	UART0_RX	FTM2_CH0	CMP0_OUT	FTM2_QD_ PHA	FTM1_CH1	FTM4_CH0
24	19	14	14	PTA2	DISABLED		PTA2	UART0_TX	FTM2_CH1	CMP1_OUT	FTM2_QD_ PHB	FTM1_CH0	FTM4_CH1
25	20	15	15	PTA3	SWD_DIO	SWD_DIO	PTA3	UART0_ RTS_b	FTM0_CH0	FTM2_FLT0	EWM_OUT_ b		SWD_DIO
26	21	16	16	PTA4/ LLWU_P3	NMI_b	NMI_b	PTA4/ LLWU_P3		FTM0_CH1	FTM4_FLT0	FTM0_FLT3		NMI_b
27	—	—	—	PTA5	DISABLED		PTA5		FTM0_CH2	FTM5_FLT0			
28	—	—	—	PTA12	DISABLED		PTA12	CAN0_TX	FTM1_CH0				FTM1_QD_ PHA
29	—	—	—	PTA13/ LLWU_P4	DISABLED		PTA13/ LLWU_P4	CAN0_RX	FTM1_CH1				FTM1_QD_ PHB
30	22	—	—	VDD	VDD	VDD							
31	23	—	—	VSS	VSS	VSS							
32	24	17	17	PTA18	EXTAL0	EXTAL0	PTA18		FTM0_FLT2	FTM_ CLKIN0		FTM3_CH2	
33	25	18	18	PTA19	XTAL0	XTAL0	PTA19	FTM0_FLT0	FTM1_FLT0	FTM_ CLKIN1		LPTMR0_ ALT1	
34	26	19	19	PTA20	RESET_b		PTA20						RESET_b
35	27	20	20	PTB0/ LLWU_P5	ADC0_SE8/ ADC1_SE8	ADC0_SE8/ ADC1_SE8	PTB0/ LLWU_P5	I2C0_SCL	FTM1_CH0			FTM1_QD_ PHA	UART0_RX
36	28	21	21	PTB1	ADC0_SE9/ ADC1_SE9	ADC0_SE9/ ADC1_SE9	PTB1	I2C0_SDA	FTM1_CH1	FTM0_FLT2	EWM_IN	FTM1_QD_ PHB	UART0_TX
37	29	—	—	PTB2	ADC0_SE10/ ADC1_SE10/ ADC1_DM2	ADC0_SE10/ ADC1_SE10/ ADC1_DM2	PTB2	I2C0_SCL	UART0_ RTS_b	FTM0_FLT1		FTM0_FLT3	
38	30	—	—	PTB3	ADC1_SE2/ ADC1_DP2	ADC1_SE2/ ADC1_DP2	PTB3	I2C0_SDA	UART0_ CTS_b			FTM0_FLT0	

64 LQFP	48 QFP	32 QFN	32 LQFP	Pin Name	DEFAULT	ALT0	ALT1	ALT2	ALT3	ALT4	ALT5	ALT6	ALT7
39	31	—	—	PTB16	DISABLED		PTB16		UART0_RX	FTM_ CLKIN2	CAN0_TX	EWM_IN	
40	32	—	—	PTB17	DISABLED		PTB17		UART0_TX	FTM_ CLKIN1	CAN0_RX	EWM_OUT_ b	
41	—	—	—	PTB18	DISABLED		PTB18	CAN0_TX		FTM3_CH2			
42	—	—	—	PTB19	DISABLED		PTB19	CAN0_RX		FTM3_CH3			
43	33	—	—	PTC0	ADC1_SE11	ADC1_SE11	PTC0	SPI0_PCS4	PDB_ EXTRG0		CMP0_OUT	FTM0_FLT0	SPI0_PCS0
44	34	22	22	PTC1/ LLWU_P6	ADC1_SE3	ADC1_SE3	PTC1/ LLWU_P6	SPI0_PCS3	UART1_ RTS_b	FTM0_CH0	FTM2_CH0		
45	35	23	23	PTC2	ADC0_SE11/ CMP1_IN0	ADC0_SE11/ CMP1_IN0	PTC2	SPI0_PCS2	UART1_ CTS_b	FTM0_CH1	FTM2_CH1		
46	36	24	24	PTC3/ LLWU_P7	CMP1_IN1	CMP1_IN1	PTC3/ LLWU_P7	SPI0_PCS1	UART1_RX	FTM0_CH2	CLKOUT	FTM3_FLT0	
47	—	—	—	VSS	VSS	VSS							
48	—	—	—	VDD	VDD	VDD							
49	37	25	25	PTC4/ LLWU_P8	DISABLED		PTC4/ LLWU_P8	SPI0_PCS0	UART1_TX	FTM0_CH3		CMP1_OUT	
50	38	26	26	PTC5/ LLWU_P9	DISABLED		PTC5/ LLWU_P9	SPI0_SCK	LPTMR0_ ALT2			CMP0_OUT	FTM0_CH2
51	39	27	27	PTC6/ LLWU_P10	CMP0_IN0	CMP0_IN0	PTC6/ LLWU_P10	SPI0_SOUT	PDB_ EXTRG1		UART0_RX		I2C0_SCL
52	40	28	28	PTC7	CMP0_IN1	CMP0_IN1	PTC7	SPI0_SIN			UART0_TX		I2C0_SDA
53	—	—	—	PTC8	ADC1_SE14/ CMP0_IN2	ADC1_SE14/ CMP0_IN2	PTC8		FTM3_CH4				
54	—	—	—	PTC9	ADC1_SE15/ CMP0_IN3	ADC1_SE15/ CMP0_IN3	PTC9		FTM3_CH5				
55	—	—	—	PTC10	ADC1_SE16	ADC1_SE16	PTC10		FTM5_CH0	FTM5_QD_ PHA			
56	—	—	—	PTC11/ LLWU_P11	ADC1_SE17	ADC1_SE17	PTC11/ LLWU_P11		FTM5_CH1	FTM5_QD_ PHB			
57	41	—	—	PTD0/ LLWU_P12	DISABLED		PTD0/ LLWU_P12	SPI0_PCS0	UART0_ CTS_b	FTM0_CH0	UART1_RX	FTM3_CH0	
58	42	—	—	PTD1	ADC0_SE2	ADC0_SE2	PTD1	SPI0_SCK	UART0_ RTS_b	FTM0_CH1	UART1_TX	FTM3_CH1	
59	43	—	—	PTD2/ LLWU_P13	DISABLED		PTD2/ LLWU_P13	SPI0_SOUT	UART0_RX	FTM0_CH2		FTM3_CH2	I2C0_SCL
60	44	—	—	PTD3	DISABLED		PTD3	SPI0_SIN	UART0_TX	FTM0_CH3		FTM3_CH3	I2C0_SDA
61	45	29	29	PTD4/ LLWU_P14	DISABLED		PTD4/ LLWU_P14	SPI0_PCS1	UART0_ RTS_b	FTM0_CH4	FTM2_CH0	EWM_IN	SPI0_PCS0
62	46	30	30	PTD5	ADC0_SE3	ADC0_SE3	PTD5	SPI0_PCS2	UART0_ CTS_b	FTM0_CH5	FTM2_CH1	EWM_OUT_ b	SPI0_SCK
63	47	31	31	PTD6/ LLWU_P15	ADC1_SE6	ADC1_SE6	PTD6/ LLWU_P15	FTM4_CH0	UART0_RX	FTM0_CH0	FTM1_CH0	FTM0_FLT0	SPI0_SOUT
64	48	32	32	PTD7	DISABLED		PTD7	FTM4_CH1	UART0_TX	FTM0_CH1	FTM1_CH1	FTM0_FLT1	SPI0_SIN

5.2 KV11 Pinouts

The following figure shows the pinout diagram for the devices supported by this document. Many signals may be multiplexed onto a single pin. To determine what signals can be used on which pin, see the previous section.

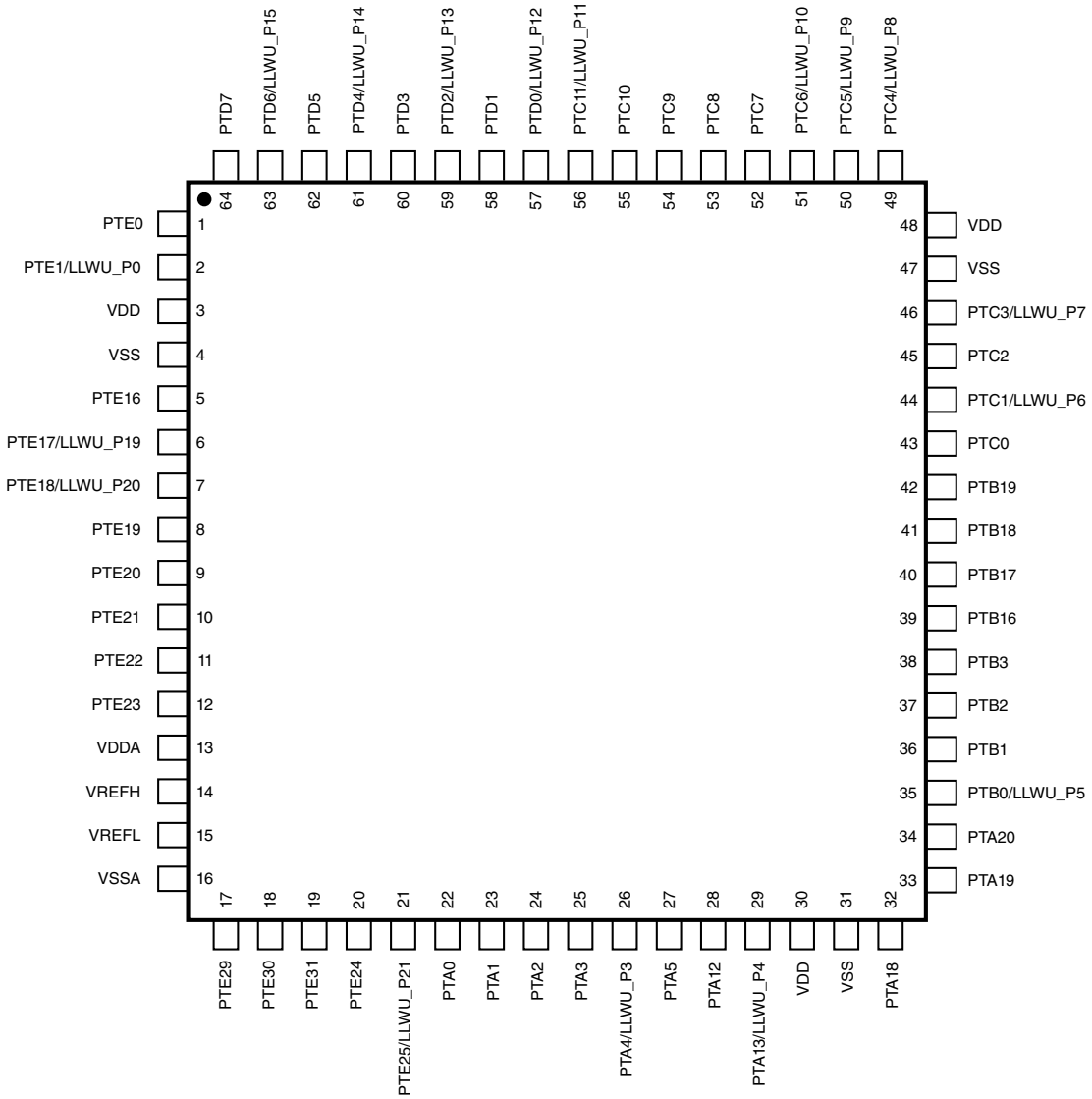

Figure 18. 64 LQFP Pinout Diagram

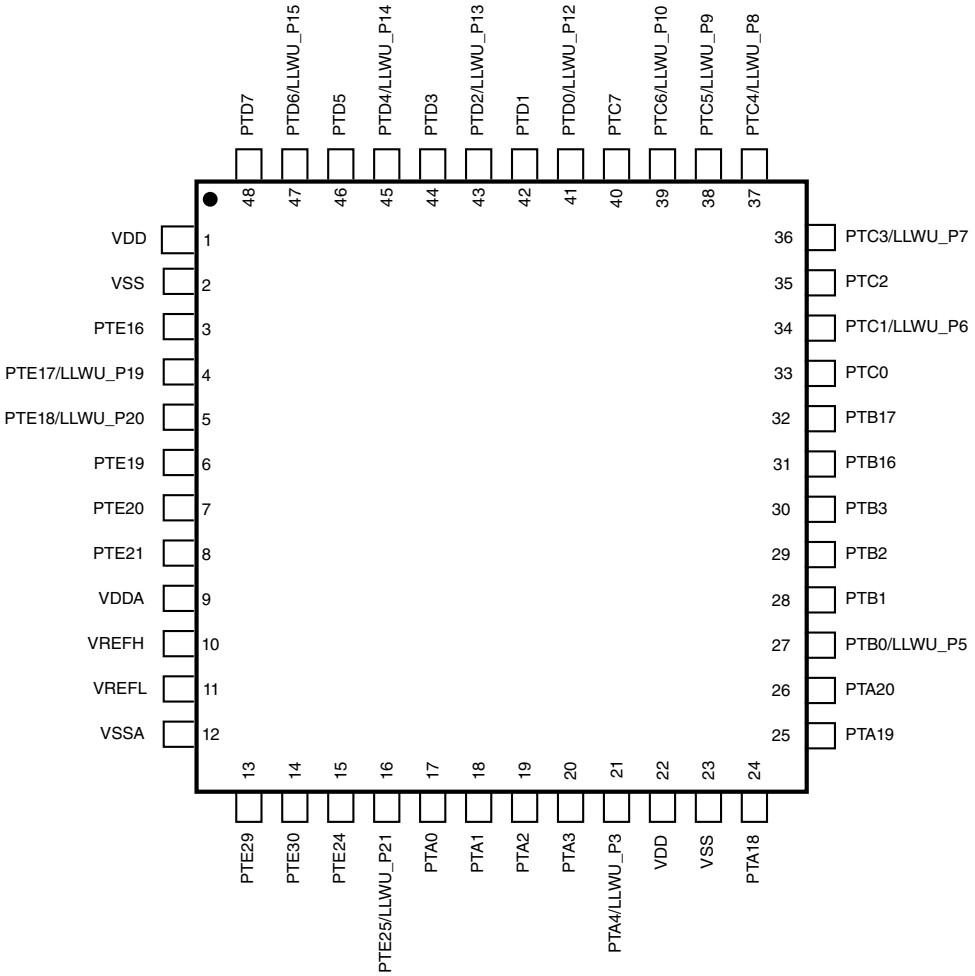

Figure 19. 48 QFP Pinout Diagram

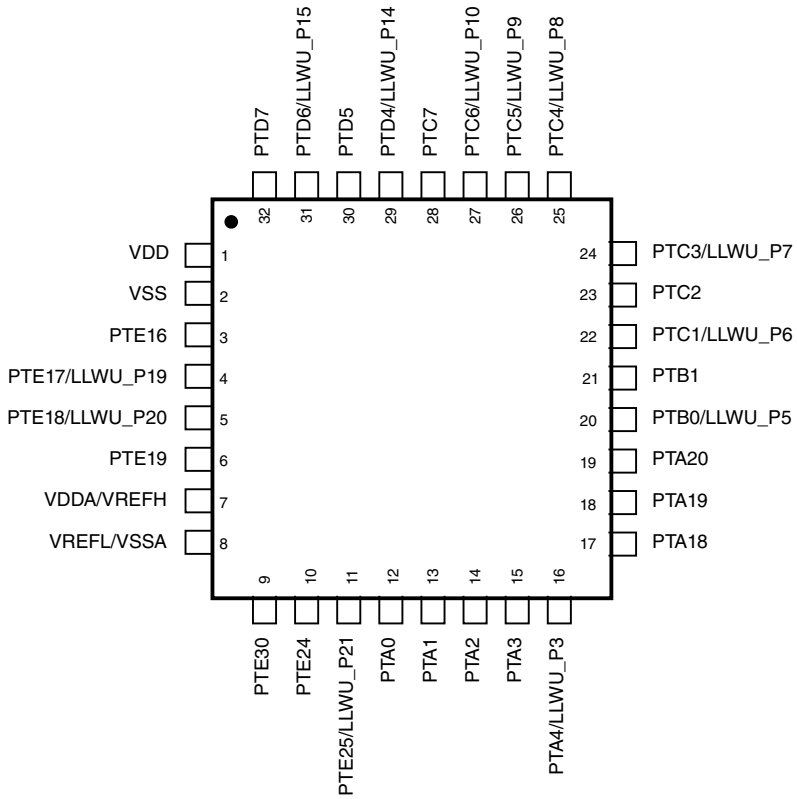

Figure 20. 32 LQFP Pinout Diagram

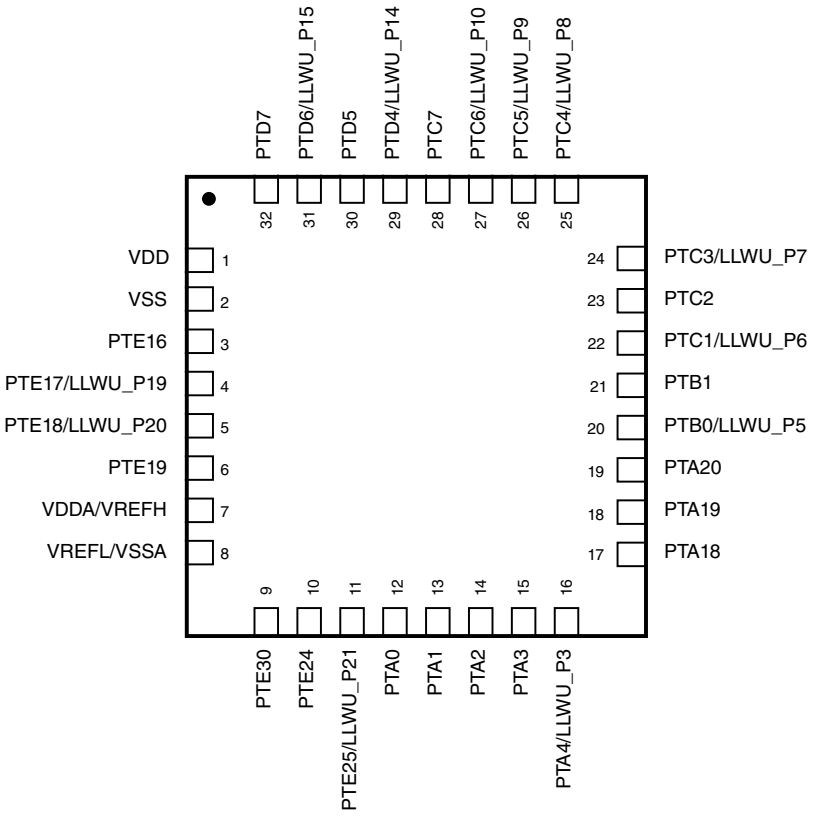

Figure 21. 32 QFN Pinout Diagram

6 Ordering parts

6.1 Determining valid orderable parts

Valid orderable part numbers are provided on the web. To determine the orderable part numbers for this device, go to www.nxp.com and perform a part number search for the MKV11 device numbers.

7 Part identification

7.1 Description

Part numbers for the chip have fields that identify the specific part. You can use the values of these fields to determine the specific part you have received.

7.2 Format

Part numbers for this device have the following format:

Q KV## M FFF R T PP CC S N

7.3 Fields

This table lists the possible values for each field in the part number (not all combinations are valid):

Field	Description	Values
Q	Qualification status	• M = Fully qualified, general market flow • P = Prequalification
KV##	Kinetis family	• KV10 and KV11
M	Key attribute	• Z = M0+ core
FFF	Program flash memory size	• 128 = 128 KB
T	Temperature range (°C)	• V = –40 to 105
PP	Package identifier	• LC = 32 LQFP (7 mm x 7 mm) • FM = 32 QFN (5 mm x 5 mm) • LF = 48 LQFP (7 mm x 7 mm) • LH = 64 LQFP (10 mm x 10 mm)
CCC	Maximum CPU frequency (MHz)	• 7 = 75 MHz
S	Software type	• (Blank) = Not software enabled
N	Packaging type	• R = Tape and reel • (Blank) = Trays

7.4 Example

This is an example part number:

MKV11Z128VFM7

8 Terminology and guidelines

8.1 Definition: Operating requirement

An *operating requirement* is a specified value or range of values for a technical characteristic that you must guarantee during operation to avoid incorrect operation and possibly decreasing the useful life of the chip.

8.1.1 Example

This is an example of an operating requirement:

Symbol	Description	Min.	Max.	Unit
V_{DD}	1.0 V core supply voltage	0.9	1.1	V

8.2 Definition: Operating behavior

Unless otherwise specified, an *operating behavior* is a specified value or range of values for a technical characteristic that are guaranteed during operation if you meet the operating requirements and any other specified conditions.

8.2.1 Example

This is an example of an operating behavior:

Symbol	Description	Min.	Max.	Unit
I_{WP}	Digital I/O weak pullup/ pulldown current	10	130	µA

8.3 Definition: Attribute

An *attribute* is a specified value or range of values for a technical characteristic that are guaranteed, regardless of whether you meet the operating requirements.

8.3.1 Example

This is an example of an attribute:

Symbol	Description	Min.	Max.	Unit
CIN_D	Input capacitance: digital pins	—	7	pF

8.4 Definition: Rating

A *rating* is a minimum or maximum value of a technical characteristic that, if exceeded, may cause permanent chip failure:

- *Operating ratings* apply during operation of the chip.
- *Handling ratings* apply when the chip is not powered.

8.4.1 Example

This is an example of an operating rating:

Symbol	Description	Min.	Max.	Unit
V_{DD}	1.0 V core supply voltage	–0.3	1.2	V

8.5 Result of exceeding a rating

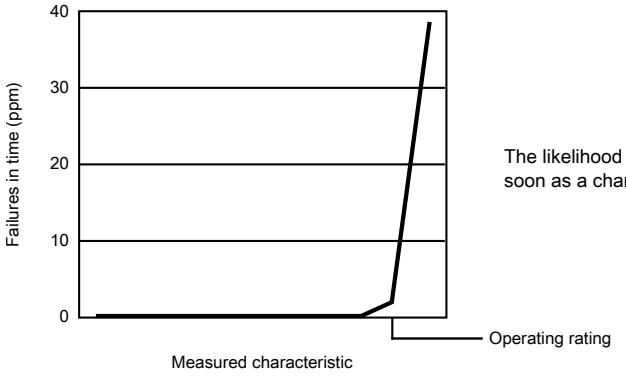

The likelihood of permanent chip failure increases rapidly as soon as a characteristic begins to exceed one of its operating ratings.

8.6 Relationship between ratings and operating requirements

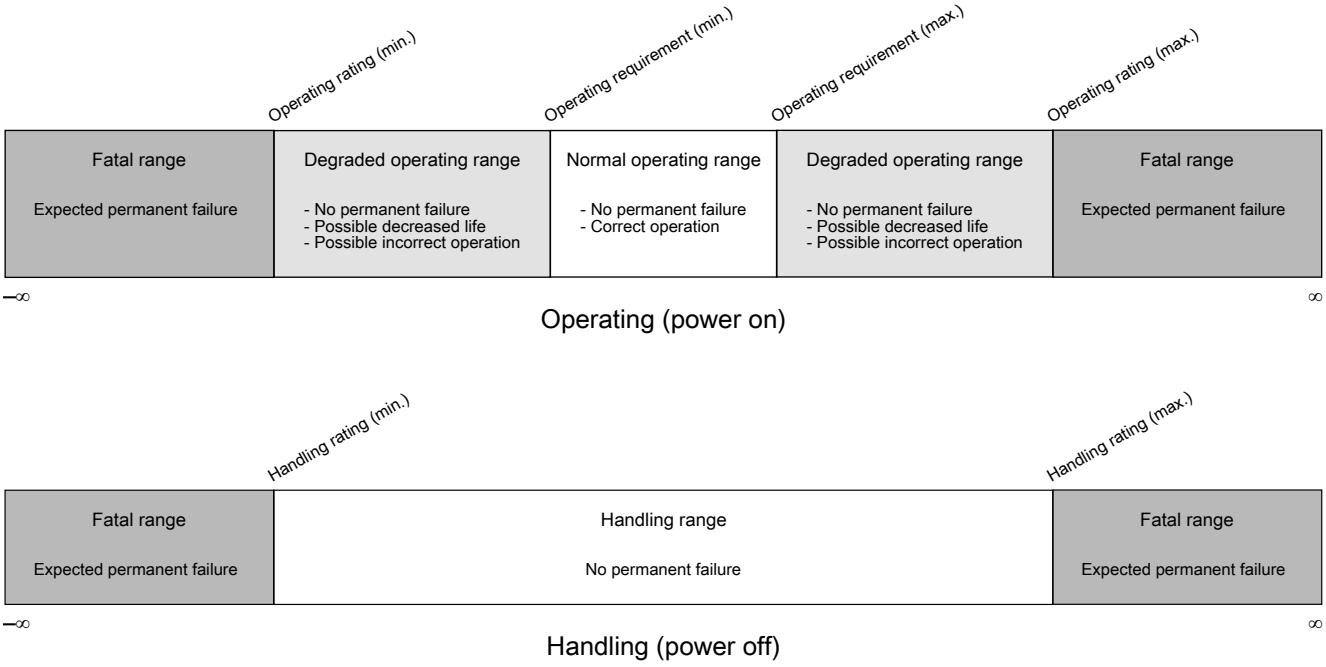

8.7 Guidelines for ratings and operating requirements

Follow these guidelines for ratings and operating requirements:

- Never exceed any of the chip's ratings.
- During normal operation, don't exceed any of the chip's operating requirements.
- If you must exceed an operating requirement at times other than during normal operation (for example, during power sequencing), limit the duration as much as possible.

8.8 Definition: Typical value

A *typical value* is a specified value for a technical characteristic that:

- Lies within the range of values specified by the operating behavior
- Given the typical manufacturing process, is representative of that characteristic during operation when you meet the typical-value conditions or other specified conditions

Typical values are provided as design guidelines and are neither tested nor guaranteed.

8.8.1 Example 1

This is an example of an operating behavior that includes a typical value:

Symbol	Description	Min.	Typ.	Max.	Unit
I_{WP}	Digital I/O weak pullup/pulldown current	10	70	130	µA

8.8.2 Example 2

This is an example of a chart that shows typical values for various voltage and temperature conditions:

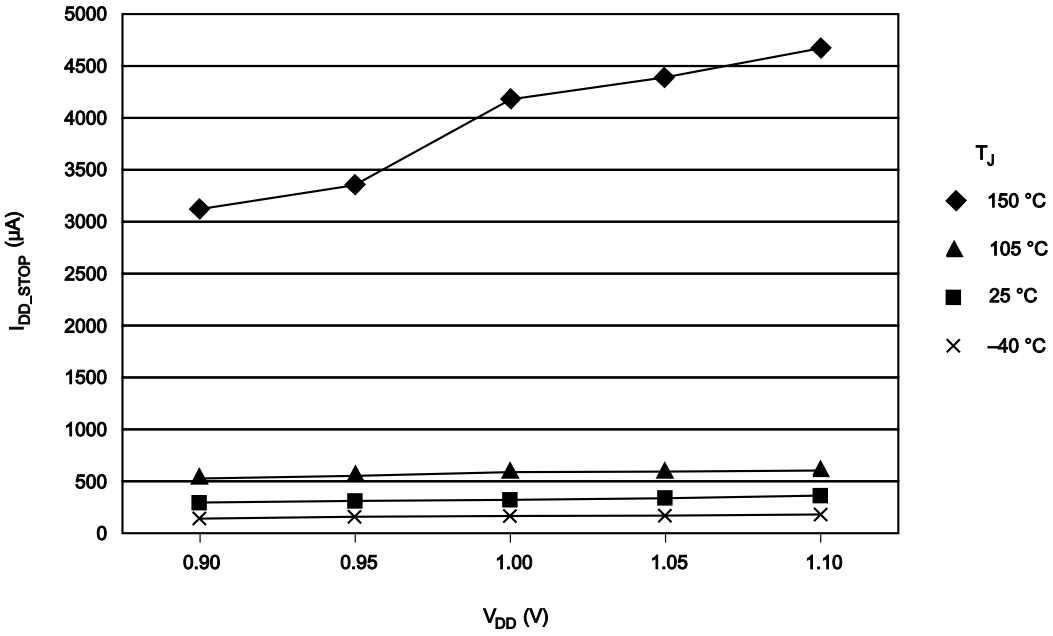

8.9 Typical Value Conditions

Typical values assume you meet the following conditions (or other conditions as specified):

Symbol	Description	Value	Unit
T_A	Ambient temperature	25	°C
V_{DD}	3.3 V supply voltage	3.3	V

9 Revision history

The following table provides a revision history for this document.

Table 30. Revision history

Rev. No.	Date	Substantial Changes
0	11/2014	Initial Prelim release.
1	02/2015	Updated the following sections: • DSPI switching specifications (limited voltage range) • DSPI switching specifications (full voltage range) • KV11 Signal Multiplexing and Pin Assignments

Table continues on the next page...

Table 30. Revision history (continued)

Rev. No.	Date	Substantial Changes
2	04/2015	Updated the following sections: • Power mode transition operating behaviors • Power consumption operating behaviors • 16-bit ADC operating conditions • Fields • Updated the table "16-bit ADC electrical characteristics" with a footnote • Added the figure "Run mode supply current vs. core frequency" to the section "Diagram: Typical IDD_RUN operating behavior"
3	06/2015	• Added a footnote to the ambient temperature entry in the table "Thermal operating requirements"
4	05/2017	• Added KMS related information in front matter • Added the section "KMS Motor Suite" • Added "S" in the sections "Format" and "Fields" to specify software type in part number • Updated the section "Example" to add an example for KMS part number • Added the KMS supported part numbers in the table "Ordering information" • Updated the table "Related resources," to include references to KMS documents • Updated the figure "KV11 block diagram" • Added a note to the t_{POR} in the table "Power mode transition operating behaviors." • Changed freescale.com to nxp.com throughout
5	07/2020	• Removed KMS related information in front matter • Removed the section "KMS Motor Suite" • Updated ARM to Arm in front matter
6	10/2020	• Updated Related Resources Table in front matter section

How to Reach Us:

Home Page:
nxp.com

Web Support:
nxp.com/support

Information in this document is provided solely to enable system and software implementers to use NXP products. There are no express or implied copyright licenses granted hereunder to design or fabricate any integrated circuits based on the information in this document. NXP reserves the right to make changes without further notice to any products herein.

NXP makes no warranty, representation, or guarantee regarding the suitability of its products for any particular purpose, nor does NXP assume any liability arising out of the application or use of any product or circuit, and specifically disclaims any and all liability, including without limitation consequential or incidental damages. “Typical” parameters that may be provided in NXP data sheets and/or specifications can and do vary in different applications, and actual performance may vary over time. All operating parameters, including “typicals,” must be validated for each customer application by customer's technical experts. NXP does not convey any license under its patent rights nor the rights of others. NXP sells products pursuant to standard terms and conditions of sale, which can be found at the following address: nxp.com/SalesTermsandConditions.

While NXP has implemented advanced security features, all products may be subject to unidentified vulnerabilities. Customers are responsible for the design and operation of their applications and products to reduce the effect of these vulnerabilities on customer's applications and products, and NXP accepts no liability for any vulnerability that is discovered. Customers should implement appropriate design and operating safeguards to minimize the risks associated with their applications and products.

NXP, the NXP logo, NXP SECURE CONNECTIONS FOR A SMARTER WORLD, COOLFLUX, EMBRACE, GREENCHIP, HITAG, I2C BUS, ICODE, JCOP, LIFE VIBES, MIFARE, MIFARE CLASSIC, MIFARE DESFire, MIFARE PLUS, MIFARE FLEX, MANTIS, MIFARE ULTRALIGHT, MIFARE4MOBILE, MIGLO, NTAG, ROADLINK, SMARTLX, SMARTMX, STARPLUG, TOPFET, TRENCHMOS, UCODE, Freescale, the Freescale logo, AltiVec, CodeWarrior, ColdFire, ColdFire+, the Energy Efficient Solutions logo, Kinetis, Layerscape, MagniV, mobileGT, PEG, PowerQUICC, Processor Expert, QorIQ, QorIQ Qonverge, SafeAssure, the SafeAssure logo, StarCore, Symphony, VortiQa, Vybrid, Airfast, BeeKit, BeeStack, CoreNet, Flexis, MXC, Platform in a Package, QUICC Engine, Tower, TurboLink, eIQ, Immersiv3D, EdgeLock, and EdgeScale are trademarks of NXP B.V. All other product or service names are the property of their respective owners. AMBA, Arm, Arm7, Arm7TDMI, Arm9, Arm11, Artisan, big.LITTLE, Cordio, CoreLink, CoreSight, Cortex, DesignStart, DynamIQ, Jazelle, Keil, Mali, Mbed, Mbed Enabled, NEON, POP, RealView, SecurCore, Socrates, Thumb, TrustZone, ULINK, ULINK2, ULINK-ME, ULINK-PLUS, ULINKpro, µVision, Versatile are trademarks or registered trademarks of Arm Limited (or its subsidiaries) in the US and/or elsewhere. The related technology may be protected by any or all of patents, copyrights, designs and trade secrets. All rights reserved. Oracle and Java are registered trademarks of Oracle and/or its affiliates. The Power Architecture and Power.org word marks and the Power and Power.org logos and related marks are trademarks and service marks licensed by Power.org SpinTAC is a trademark of LineStream Technologies, Inc.

©2014-2020 NXP B.V.

Document Number KV11P64M75
Revision 6, 10/2020