KV4x Data Sheet

168 MHz Arm Cortex-M4 core based Microcontroller with FPU

The Kinetis KV4x MCU family is a member of the Kinetis V series and provides a high-performance solution for motor control and Digital Power Conversion. Built upon the Arm® Cortex®-M4 core operating at up to 168 MHz with DSP and floating point unit, features include; dual 12-bit analog-to-digital converters with 240ns conversion time, up to 30 PWM channels for support of multi-motor systems, eFlexPWM module with 312 ps resolution for digital power conversion applications, programmable delay block, memory protection unit, dual FlexCAN modules and 64 to 256 KB of flash memory. KV4x MCUs are offered in 48LQFP, 64LQFP, and 100LQFP packages. All Kinetis V series MCUs are supported by a comprehensive enablement suite from NXP and third-party resources including reference designs, software libraries and motor configuration tools.

MKV46FxxxVLy16
MKV44FxxxVLy16
MKV42FxxxVLy16
MKV46FxxxVLy16z
MKV42FxxxVLy16z

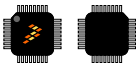

100 LQFP
14 x 14 x 1.4 Pitch 0.5 mm

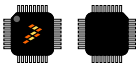

64 LQFP
10 x 10 x 1.4 Pitch 0.5 mm

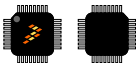

48 LQFP
7 x 7 x 1.4 Pitch 0.5 mm

Core

- Arm® Cortex®-M4 core up to 168 MHz with single precision Floating Point Unit (FPU)

Memories

- Up to 256 KB of program flash memory
- Up to 32 KB of RAM

System peripherals

- 16-channel DMA controller
- Low-leakage wakeup unit
- SWD interface
- Advanced independent clocked watchdog

Clocks

- 32 to 40 kHz or 3 to 32 MHz crystal oscillator
- Multipurpose clock generator (MCG) with frequency-locked loop and phase-locked loop referencing either internal or external reference clock

Operating Characteristics

- Voltage range: 1.71 to 3.6 V
- Temperature range: –40 to 105 °C

Human-machine interface

- General-purpose input/output

Communication interfaces

- Two Universal Asynchronous Receiver/Transmitter (UART) / FlexSCI modules with programmable 8- or 9-bit data format
- One 16-bit SPI module
- One I2C module
- Two FlexCAN modules

Analog Modules

- Two 12-bit cyclic ADCs
- Four analog comparator (CMP) containing a 6-bit DAC and programmable reference input
- One 12-bit DAC

Timers

- One eFlexPWM with 4 sub-modules, providing 12 PWM outputs
- Two 8-channel FlexTimers (FTM0 and FTM3)
- One 2-channel FlexTimers (FTM1)
- Four Periodic interrupt timers (PIT)
- Two Programmable Delay Blocks (PDB)
- Quadrature Encoder/Decoder (ENC)
- Ratio of timer input clock frequency vs. core frequency is 1:2 when core frequency is 168 Mhz, and 1:1 when core frequency is less than or equal to 100 Mhz

NXP reserves the right to change the production detail specifications as may be required to permit improvements in the design of its products.

Security and integrity modules

- Hardware CRC module to support fast cyclic redundancy checks
- External Watchdog Monitor (EWM)

Orderable part numbers summary[1]

NXP part number	CPU frequency (MHz)	Pin count	Total flash memory (KB)	SRAM (KB)	ADC		eFlexPWM		PWM Nano-Edge	Flex Timers			DAC	FlexCAN	
					ADCA	ADCB	PWMA PWMB	PWMX		FTM0	FTM3	FTM1		CAN0	CAN1
MKV46F256VLL16	168	100	256	32	18ch	20ch	1x8ch	1x4ch	Yes	1x8ch	1x8ch	1x2ch	1	1	1
MKV46F256VLH16	168	64	256	32	13ch	16ch	1x8ch	—	Yes	1x8ch	1x8ch	1x2ch	1	1	1
MKV46F128VLL16	168	100	128	24	18ch	20ch	1x8ch	1x4ch	Yes	1x8ch	1x8ch	1x2ch	1	1	1
MKV46F128VLH16	168	64	128	24	13ch	16ch	1x8ch	—	Yes	1x8ch	1x8ch	1x2ch	1	1	1
MKV44F256VLL16	168	100	256	32	18ch	20ch	1x8ch	1x4ch	Yes	—	—	—	1	1	1
MKV44F256VLH16	168	64	256	32	13ch	16ch	1x8ch	—	Yes	—	—	—	1	1	1
MKV44F128VLL16	168	100	128	24	18ch	20ch	1x8ch	1x4ch	Yes	—	—	—	1	1	1
MKV44F128VLH16	168	64	128	24	13ch	16ch	1x8ch	—	Yes	—	—	—	1	1	1
MKV44F128VLF16	168	48	128	24	11ch	10ch	1x8ch	—	Yes	—	—	—	1	1	—
MKV44F64VLH16	168	64	64	16	13ch	16ch	1x8ch	—	Yes	—	—	—	1	1	1
MKV44F64VLF16	168	48	64	16	11ch	10ch	1x8ch	—	Yes	—	—	—	1	1	—
MKV42F256VLL16	168	100	256	32	18ch	20ch	—	—	—	1x8ch	1x8ch	1x2ch	—	1	1
MKV42F256VLH16	168	64	256	32	13ch	16ch	—	—	—	1x8ch	1x8ch	1x2ch	—	1	1
MKV42F128VLL16	168	100	128	24	18ch	20ch	—	—	—	1x8ch	1x8ch	1x2ch	—	1	1
MKV42F128VLH16	168	64	128	24	13ch	16ch	—	—	—	1x8ch	1x8ch	1x2ch	—	1	1
MKV42F128VLF16	168	48	128	24	11ch	10ch	—	—	—	1x8ch	1x8ch	1x2ch	—	1	—
MKV42F64VLH16	168	64	64	16	13ch	16ch	—	—	—	1x8ch	1x8ch	1x2ch	—	1	1

Table continues on the next page...

Orderable part numbers summary[1] (continued)

NXP part number	CPU frequency (MHz)	Pin count	Total flash memory (KB)	SRAM (KB)	ADC		eFlexPWM		PWM Nano-Edge	Flex Timers			DAC	FlexCAN	
					ADCA	ADCB	PWMA PWMB	PWMX		FTM0	FTM3	FTM1		CAN0	CAN1
MKV42F64VLF16	168	48	64	16	11ch	10ch	—	—	—	1x8ch	1x8ch	1x2ch	—	1	—

1. To confirm current availability of ordererable part numbers, go to http://www.nxp.com and perform a part number search.

Device Revision Number

Device Mask Set Number	SIM_SDID[REVID]	JTAG ID Register[PRN]
1N72K	0001	0001

Related Resources

Type	Description	Resource
Selector Guide	The Solution Advisor is a web-based tool that features interactive application wizards and a dynamic product selector.	Solution Advisor
Reference Manual	The Reference Manual contains a comprehensive description of the structure and function (operation) of a device.	KV4XP100M168RM[1]
Data Sheet	The Data Sheet includes electrical characteristics and signal connections.	KV4XP100M168[1]
Chip Errata	The chip mask set Errata provides additional or corrective information for a particular device mask set.	Kinetis_V_1N72K[1]
Package drawing	Package dimensions are provided in package drawings.	• LQFP 100-pin: 98ASS23308W[1] • LQFP 64-pin: 98ASS23234W[1] • LQFP 48-pin: 98ASH00962A[1]

1. To find the associated resource, go to http://www.nxp.com and perform a search using this term.

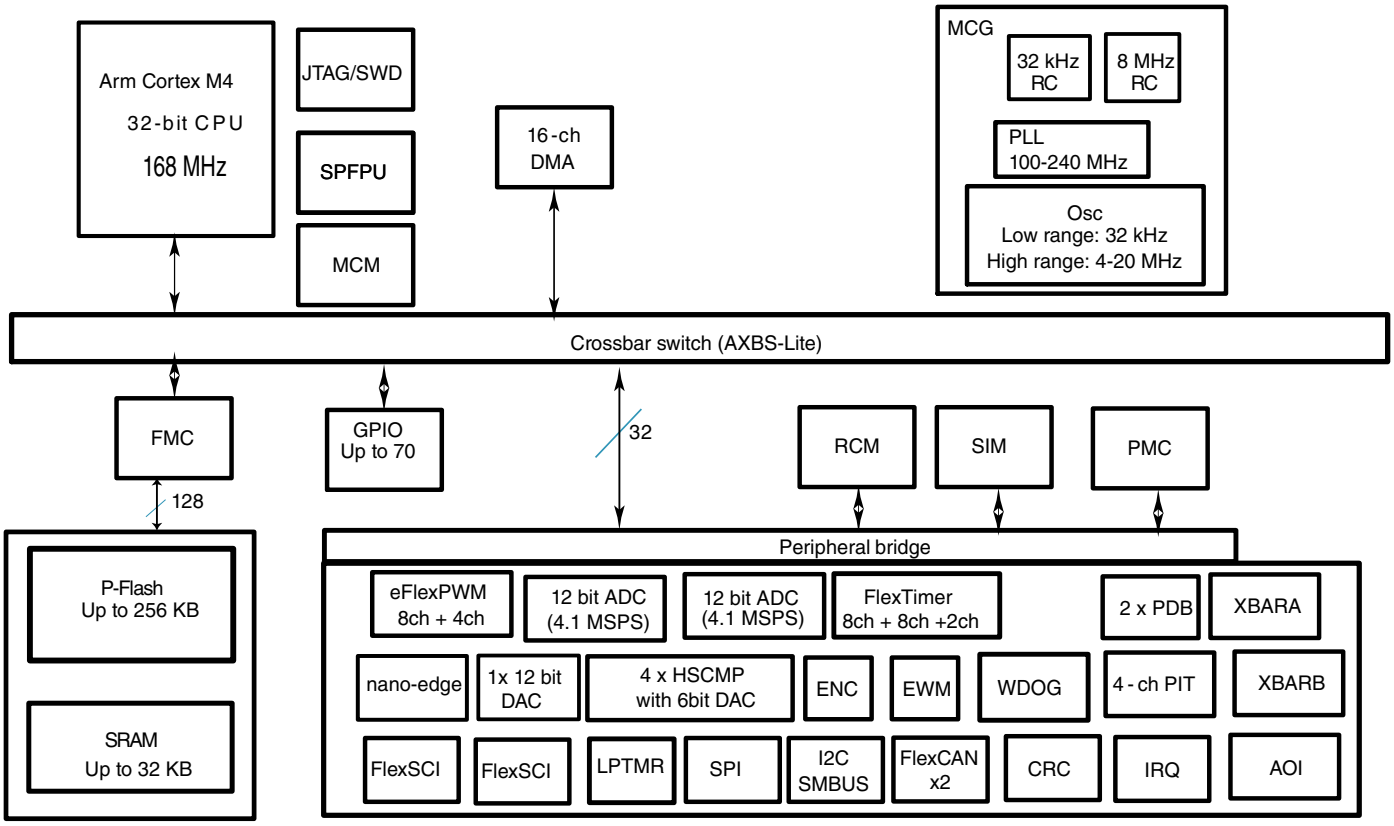

Figure 1. KV4x block diagram

Table of Contents

1 Ratings....6
1.1 Thermal handling ratings....6
1.2 Moisture handling ratings....6
1.3 ESD handling ratings....6
1.4 Voltage and current operating ratings....6
1.5 Absolute Maximum Ratings....7
2 General....8
2.1 AC electrical characteristics....8
2.2 Nonswitching electrical specifications....9
2.2.1 Recommended Operating Conditions....9
2.2.2 LVD and POR operating requirements....10
2.2.3 Voltage and current operating behaviors....10
2.2.4 Power mode transition operating behaviors....11
2.2.5 Power consumption operating behaviors....12
2.2.6 EMC radiated emissions operating behaviors....17
2.2.7 Designing with radiated emissions in mind....18
2.2.8 Capacitance attributes....18
2.3 Switching specifications....18
2.3.1 Typical device clock specifications....18
2.3.2 General switching specifications....19
2.4 Thermal specifications....20
2.4.1 Thermal operating requirements....20
2.4.2 Thermal attributes....20
3 Peripheral operating requirements and behaviors....21
3.1 Core modules....21
3.1.1 SWD Electricals....21
3.1.2 JTAG electricals....22
3.2 System modules....25
3.3 Clock modules....25
3.3.1 MCG specifications....25
3.3.2 Oscillator electrical specifications....28
3.4 Memories and memory interfaces....30
3.4.1 Flash electrical specifications....30
3.5 Security and integrity modules....31
3.6 Analog....31
3.6.1 12-bit cyclic Analog-to-Digital Converter (ADC) parameters....31
3.6.2 CMP and 6-bit DAC electrical specifications....34
3.6.3 12-bit DAC electrical characteristics....35
3.7 Timers....38
3.8 Enhanced NanoEdge PWM characteristics....38
3.9 Communication interfaces....39
3.9.1 SPI (DSPI) switching specifications (limited voltage range)....39
3.9.2 SPI (DSPI) switching specifications (full voltage range)....43
3.9.3 I2C....46
3.9.4 UART....46
4 Dimensions....46
4.1 Obtaining package dimensions....47
5 Pinout....47
5.1 KV4x Signal Multiplexing and Pin Assignments....47
5.2 Pinout diagrams....51
6 Ordering parts....54
6.1 Determining valid orderable parts....54
7 Part identification....55
7.1 Description....55
7.2 Format....55
7.3 Fields....55
7.4 Example....56
8 Terminology and guidelines....56
8.1 Definition: Operating requirement....56
8.2 Definition: Operating behavior....56
8.3 Definition: Attribute....57
8.4 Definition: Rating....57
8.5 Result of exceeding a rating....58
8.6 Relationship between ratings and operating requirements....58
8.7 Guidelines for ratings and operating requirements....58
8.8 Definition: Typical value....59
8.9 Typical Value Conditions....60
9 Revision history....60

1 Ratings

1.1 Thermal handling ratings

Symbol	Description	Min.	Max.	Unit	Notes
T_{STG}	Storage temperature	–55	150	°C	1
T_{SDR}	Solder temperature, lead-free	—	260	°C	2

1. Determined according to JEDEC Standard JESD22-A103, *High Temperature Storage Life*.
2. Determined according to IPC/JEDEC Standard J-STD-020, *Moisture/Reflow Sensitivity Classification for Nonhermetic Solid State Surface Mount Devices*.

1.2 Moisture handling ratings

Symbol	Description	Min.	Max.	Unit	Notes
MSL	Moisture sensitivity level	—	3	—	1

1. Determined according to IPC/JEDEC Standard J-STD-020, *Moisture/Reflow Sensitivity Classification for Nonhermetic Solid State Surface Mount Devices*.

1.3 ESD handling ratings

Symbol	Description	Min.	Max.	Unit	Notes
V_{HBM}	Electrostatic discharge voltage, human-body model	-2000	+2000	V	1
V_{CDM}	Electrostatic discharge voltage, charged-device model	-500	+500	V	2
I_{LAT}	Latch-up current at ambient temperature of 105 °C	-100	+100	mA	3

1. Determined according to JEDEC Standard JESD22-A114, *Electrostatic Discharge (ESD) Sensitivity Testing Human Body Model (HBM)*.
2. Determined according to JEDEC Standard JESD22-C101, *Field-Induced Charged-Device Model Test Method for Electrostatic-Discharge-Withstand Thresholds of Microelectronic Components*.
3. Determined according to JEDEC Standard JESD78, *IC Latch-up Test*.

1.4 Voltage and current operating ratings

Symbol	Description	Min.	Max.	Unit
V_{DD}	Digital supply voltage	–0.3	3.8	V
I_{DD}	Digital supply current	—	120	mA
V_{IO}	Digital pin input voltage (except open drain pins)	–0.3	VDD + 0.3[1]	V
	Open drain pins (PTC6 and PTC7)	–0.3	5.5	V
I_D	Instantaneous maximum current single pin limit (applies to all port pins)	–25	25	mA
V_{DDA}	Analog supply voltage	V_{DD} – 0.3	V_{DD} + 0.3	V

1. Maximum value of V_{IO} (except open drain pins) must be 3.8 V.

1.5 Absolute Maximum Ratings

Absolute maximum ratings are stress ratings only, and functional operation at the maxima is not guaranteed. Stress beyond the limits specified in Table 1 may affect device reliability or cause permanent damage to the device. For functional operating conditions, refer to the remaining tables in this section.

Table 1. Absolute Maximum Ratings (V_{SS} = 0 V, V_{SSA} = 0 V)

Symbol	Description	Notes[1]	Min	Max	Unit
V_{DD}	Supply Voltage Range		-0.3	4.0	V
V_{DDA}	Analog Supply Voltage Range		-0.3	4.0	V
V_{REFHx}	ADC High Voltage Reference		-0.3	4.0	V
V_{REFLx}	ADC Low Voltage Reference		-0.3	0.3	V
ΔV_{DD}	Voltage difference V_{DD} to V_{DDA}		-0.3	0.3	V
ΔV_{SS}	Voltage difference V_{SS} to V_{SSA}		-0.3	0.3	V
V_{IN}	Digital Input Voltage Range	Pin Groups 1, 2	-0.3	4.0	V
V_{OSC}	Oscillator Input Voltage Range	Pin Group 4	-0.4	4.0	V
V_{INA}	Analog Input Voltage Range	Pin Group 3	-0.3	4.0	V
I_{IC}	Input clamp current, per pin (V_{IN} < 0)		—	-20.0	mA
I_{OC}	Output clamp current, per pin (V_O < 0)[2]		—	-20.0	mA
V_{OUT}	Output Voltage Range (Normal Push-Pull mode)	Pin Group 1	-0.3	4.0	V
V_{OUTOD}	Output Voltage Range (Open Drain mode)	Pin Group 2	-0.3	5.5	V
V_{OUT_DAC}	DAC Output Voltage Range	Pin Group 5	-0.3	4.0	V
T_A	Ambient Temperature Industrial		-40	105	°C
T_{STG}	Storage Temperature Range (Extended Industrial)		-55	150	°C

1. Default Mode
   - Pin Group 1: GPIO, TDI, TDO, TMS, TCK
   - Pin Group 2: $\overline{\text{RESET}}$, PORTC6, and PORTC7
   - Pin Group 3: ADC and Comparator Analog Inputs

- Pin Group 4: XTAL, EXTAL
- Pin Group 5: DAC analog output

2. Continuous clamp current per pin is -2.0 mA

2 General

Electromagnetic compatibility (EMC) performance depends on the environment in which the MCU resides. Board design and layout, circuit topology choices, location, characteristics of external components, and MCU software operation play a significant role in EMC performance.

See the following applications notes available on nxp.com for guidelines on optimizing EMC performance.

- *AN2321: Designing for Board Level Electromagnetic Compatibility*
- *AN1050: Designing for Electromagnetic Compatibility (EMC) with HCMOS Microcontrollers*
- *AN1263: Designing for Electromagnetic Compatibility with Single-Chip Microcontrollers*
- *AN2764: Improving the Transient Immunity Performance of Microcontroller-Based Applications*
- *AN1259: System Design and Layout Techniques for Noise Reduction in MCU-Based Systems*

2.1 AC electrical characteristics

Unless otherwise specified, propagation delays are measured from the 50% to the 50% point, and rise and fall times are measured at the 20% and 80% points, as shown in the following figure.

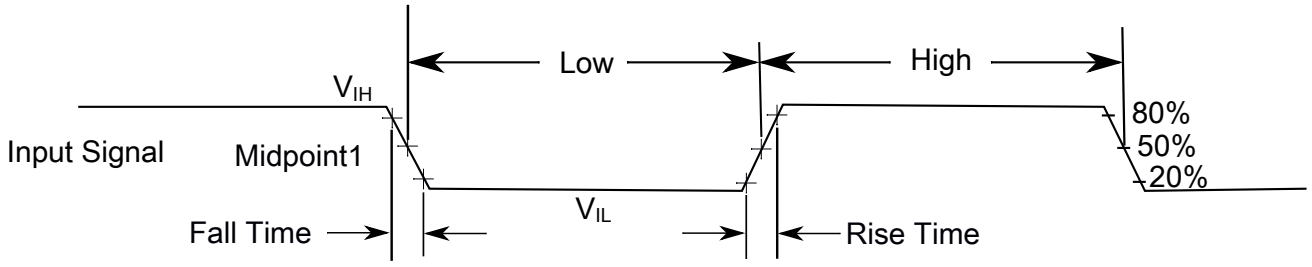

Figure 2. Input signal measurement reference

All digital I/O switching characteristics, unless otherwise specified, assume:

1. output pins
   - have C_L=30pF loads,
   - are slew rate disabled, and
   - are normal drive strength

2.2 Nonswitching electrical specifications

2.2.1 Recommended Operating Conditions

This section includes information about recommended operating conditions.

NOTE

Recommended V_{DD} ramp rate is between 1 ms and 200 ms.

Table 2. Recommended Operating Conditions (V_{REFLx}=0V, V_{SSA}=0V, V_{SS}=0V)

Symbol	Description	Notes[1]	Min	Typ	Max	Unit
V_{DD}	Supply Voltage Digital	2, 3	1.71		3.6	V
V_{DDA}	Supply voltage (analog)	2, 3	2.7	3.0	3.6	V
V_{REFHx}	ADC (Cyclic) Reference Voltage High		2.7		V_{DDA}	V
ΔVDD	Voltage difference V_{DD} to V_{DDA}		-0.1	0	0.1	V
ΔVSS	Voltage difference V_{SS} to V_{SSA}		-0.1	0	0.1	V
F_MCGOUT	Device Clock Frequency • using internal RC oscillator • using external clock source		0.04 0		168 168	MHz
V_{IH}	Input Voltage High (digital inputs)	Pin Groups 1, 2	0.7 x V_{DD}		3.6	V
V_{IL}	Input Voltage Low (digital inputs)	Pin Groups 1, 2			0.35 x V_{DD}	V
V_{HYS}	Input hystersis		0.06 x V_{DD}	–	–	V
V_{IHOSC}	Oscillator Input Voltage High XTAL driven by an external clock source	Pin Group 4	2.0		V_{DD} + 0.3	V
V_{ILOSC}	Oscillator Input Voltage Low	Pin Group 4	-0.3		0.8	V
C_{out}	DAC Output Current Drive Strength	Pin Group 5			1	mA
T_A	Ambient Operating Temperature		-40		105	°C

1. Default Mode
   - Pin Group 1: GPIO, TDI, TDO, TMS, TCK
   - Pin Group 2: $\overline{\text{RESET}}$
   - Pin Group 3: ADC and Comparator Analog Inputs
   - Pin Group 4: XTAL, EXTAL
   - Pin Group 5: DAC analog output

- Pin Group 6: PTB0, PTB1, PTD4, PTD5, PTD6, PTD7, PTC3, and PTC4. have high output current capability
- Pin Group 7: PTC6 and PTC7 are true open drain pins and have no P-chanl transistor. A external pull-up resistor is required when these pins are outputs.

2. If the ADC is enabled, minimum V_{DD} is 2.7 V and minimum V_{DDA} is 2.7 V. ADCA and ADCB are not guaranteed to operate below 2.7 V. All other analog modules besides the ADC and Nano-edge will operate down to 1.71 V.
3. If the Nano-edge is enabled, minimum V_{DD} is 3.0 V and minimum V_{DDA} is 3.0 V. Nano-edge is not guaranteed to operate below 3.0 V. All other analog modules besides the ADC and Nano-edge will operate down to 1.71 V.

2.2.2 LVD and POR operating requirements

Table 3. V_{DD} supply LVD and POR operating requirements

Symbol	Description	Min.	Typ.	Max.	Unit	Notes
V_{POR}	Falling V_{DD} POR detect voltage	0.8	1.1	1.5	V	
V_{LVDH}	Falling low-voltage detect threshold — high range (LVDV=01)	2.48	2.56	2.64	V	
	Low-voltage warning thresholds — high range					1
V_{LVW1H}	• Level 1 falling (LVWV=00)	2.62	2.70	2.78	V	
V_{LVW2H}	• Level 2 falling (LVWV=01)	2.72	2.80	2.88	V	
V_{LVW3H}	• Level 3 falling (LVWV=10)	2.82	2.90	2.98	V	
V_{LVW4H}	• Level 4 falling (LVWV=11)	2.92	3.00	3.08	V	
V_{HYSH}	Low-voltage inhibit reset/recover hysteresis — high range	—	±80	—	mV	
V_{LVDL}	Falling low-voltage detect threshold — low range (LVDV=00)	1.54	1.60	1.66	V	
	Low-voltage warning thresholds — low range					1
V_{LVW1L}	• Level 1 falling (LVWV=00)	1.74	1.80	1.86	V	
V_{LVW2L}	• Level 2 falling (LVWV=01)	1.84	1.90	1.96	V	
V_{LVW3L}	• Level 3 falling (LVWV=10)	1.94	2.00	2.06	V	
V_{LVW4L}	• Level 4 falling (LVWV=11)	2.04	2.10	2.16	V	
V_{HYSL}	Low-voltage inhibit reset/recover hysteresis — low range	—	±60	—	mV	
V_{BG}	Bandgap voltage reference	0.97	1.00	1.03	V	
t_{LPO}	Internal low power oscillator period — factory trimmed	900	1000	1100	µs	

1. Rising thresholds are falling threshold + hysteresis voltage

2.2.3 Voltage and current operating behaviors

Table 4. Voltage and current operating behaviors

Symbol	Description	Min.	Typ.	Max.	Unit	Notes
V_{OH}	Output high voltage — normal drive pad					

Table continues on the next page...

Table 4. Voltage and current operating behaviors (continued)

Symbol	Description	Min.	Typ.	Max.	Unit	Notes
	• 2.7 V ≤ V_{DD} ≤ 3.6 V, I_{OH} = -10mA	V_{DD} – 0.5	—	—	V	
	• 1.71 V ≤V_{DD} ≤ 2.7 V, I_{OH} = -5mA	V_{DD} – 0.5	—	—	V	
	Output high voltage — High drive pad					1
	• 2.7 V ≤ V_{DD} ≤ 3.6 V, I_{OH} = -20mA	V_{DD} – 0.5	—	—	V	
	• 1.71 V ≤ V_{DD} ≤ 2.7 V, I_{OH} = -10mA	V_{DD} – 0.5	—	—	V	
I_{OHT}	Output high current total for all ports	—	—	100	mA	
V_{OL}	Output low voltage — open drain pad	—	—	0.5	V	2
	• 2.7 V ≤ V_{DD} ≤ 3.6 V, I_{OH} = 3 mA	—	—	0.5	V	
	• 1.71 V ≤ V_{DD} ≤ 2.7 V, I_{OH} = 1 mA					
V_{OL}	Output low voltage — normal drive pad	—	—	0.5	V	
	• 2.7 V ≤ V_{DD} ≤ 3.6 V, I_{OL} = 10 mA	—	—	0.5	V	
	• 1.71 V ≤ V_{DD} ≤ 2.7 V, I_{OL} = 5 mA					
	Output low voltage — high drive pad	—	—	0.5	V	1
	• 2.7 V ≤ V_{DD} ≤ 3.6 V, I_{OL} = 20 mA	—	—	0.5	V	
	• 1.71 V ≤ V_{DD} ≤ 2.7 V, I_{OL} = 10 mA					
I_{OLT}	Output low current total for all ports	—	—	100	mA	
I_{IN}	Input leakage current, analog and digital pins • V_{SS} ≤ V_{IN} ≤ V_{DD}	—	0.002	0.5	µA	3
R_{PU}	Internal pullup resistors(except RTC_WAKEUP pins)	20	—	50	kΩ	4
R_{PD}	Internal pulldown resistors	20	—	50	kΩ	5

1. High drive pads are PTB0, PTB1, PTC3, PTC4, PTD4, PTD5, PTD6 and PTD7.
2. Open drain pads are PTC6 and PTC7.
3. Measured at VDD=3.6V
4. Measured at V_{DD} supply voltage = V_{DD} min and Vinput = V_{SS}
5. Measured at V_{DD} supply voltage = V_{DD} min and Vinput = V_{DD}

2.2.4 Power mode transition operating behaviors

All specifications except t_{POR} and VLLSx→RUN recovery times in the following table assume this clock configuration:

- CPU and system clocks = 100 MHz
- Bus and flash clock = 25 MHz
- FEI clock mode

Table 5. Power mode transition operating behaviors

Symbol	Description	Min.	Typ.	Max.	Unit	Notes
t_{POR}	After a POR event, amount of time from the point V_{DD} reaches 1.71 V to execution of the first instruction across the operating temperature range of the chip.	—	—	300	µs	
	• VLLS0 → RUN	—	—	173	µs	
	• VLLS1 → RUN	—	—	172	µs	
	• VLLS2 → RUN	—	—	96	µs	
	• VLLS3 → RUN	—	—	96	µs	
	• VLPS → RUN	—	—	5.4	µs	
	• STOP → RUN	—	—	5.4	µs	

2.2.5 Power consumption operating behaviors

NOTE

The maximum values represent characterized results equivalent to the mean plus three times the standard deviation (mean+3σ)

Table 6. Power consumption operating behaviors (All IDDs are Target values)

Symbol	Description	Min.	Typ.	Max.	Unit	Notes
I_{DD_RUN}	Run mode current — all peripheral clocks disabled, code executing from flash, excludes IDDA					1
	• @ 1.8V	—	6.8	17.2	mA	
	• @ 3.0V	—	6.9	17.4	mA	
I_{DD_RUN}	Run mode current — all peripheral clocks disabled, code executing from flash, excludes IDDA					2
	• @ 1.8V					
	• @ 3.0V	—	9.9	19.7	mA	

Table continues on the next page...

Table 6. Power consumption operating behaviors (All IDDs are Target values) (continued)

Symbol	Description	Min.	Typ.	Max.	Unit	Notes
		—	10.0	19.8	mA	
I_{DD_RUN}	Run mode current — all peripheral clocks disabled, code executing from flash, excludes IDDA					3
	• @ 1.8V	—	17.0	25.9	mA	
	• @ 3.0V	—	17.2	26.1	mA	
I_{DD_HSRUN}	Run mode current — all peripheral clocks disabled, code executing from flash, excludes IDDA					4
	• @ 1.8V	—	26.3	45.3	mA	
	• @ 3.0V	—	26.5	45.5	mA	
I_{DD_HSRUN}	Run mode current — all peripheral clocks enabled, code executing from flash,excludes IDDA					5
	• @ 3.0V					
	• @ 25°C	—	34.0	45.5	mA	
	• @ 105°C	—	39.0	53.2	mA	
I_{DD_WAIT}	Wait mode high frequency current at 3.0 V — all peripheral clocks disabled	—	8.9	14.93	mA	6
I_{DD_VLPR}	Very-low-power run mode current at 3.0 V — all peripheral clocks disabled	—	0.58	1.88	mA	7
I_{DD_VLPR}	Very-low-power run mode current at 3.0 V — all peripheral clocks enabled	—	0.83	2.11	mA	8
I_{DD_VLPW}	Very-low-power wait mode current at 3.0 V — all peripheral clocks disabled	—	0.34	1.59	mA	9
I_{DD_STOP}	Stop mode current at 3.0 V					
	• @ –40 to 25°C	—	0.43	2.03	mA	
	• @ 70°C	—	1.16	4.27	mA	
	• @ 105°C	—	3.05	10.13	mA	
I_{DD_VLPS}	Very-low-power stop mode current at 3.0 V					
	• @ –40 to 25°C	—	58	218	µA	
	• @ 70°C	—	280	1340	µA	
	• @ 105°C	—	924	2870	µA	
I_{DD_VLLS3}	Very low-leakage stop mode 3 current at 3.0 V					
	• @ –40 to 25°C	—	2.8	5.3	µA	
	• @ 70°C	—	9.6	35.1	µA	
	• @ 105°C	—	37.4	134.8	µA	
I_{DD_VLLS2}	Very low-leakage stop mode 2 current at 3.0 V					

Table continues on the next page...

Table 6. Power consumption operating behaviors (All IDDs are Target values) (continued)

Symbol	Description	Min.	Typ.	Max.	Unit	Notes
	• @ –40 to 25°C	—	2.7	3.3	µA	
	• @ 70°C	—	6.6	12.2	µA	
	• @ 105°C	—	25.9	50.5	µA	
I_{DD_VLLS1}	Very low-leakage stop mode 1 current at 3.0 V					
	• @ –40 to 25°C	—	740	1200	nA	
	• @ 70°C	—	2.5	10.6	µA	
	• @ 105°C	—	11.1	26.5	µA	
I_{DD_VLLS0B}	Very low-leakage stop mode 0 current at 3.0 V with POR detect circuit enabled					
	• @ –40 to 25°C	—	420	832	nA	
	• @ 70°C	—	1.9	9.4	µA	
	• @ 105°C	—	10.8	26.3	µA	
I_{DD_VLLS0A}	Very low-leakage stop mode 0 current at 3.0 V with POR detect circuit disabled					
	• @ –40 to 25°C	—	200	599	nA	
	• @ 70°C	—	1.8	10.5	µA	
	• @ 105°C	—	10.8	26.3	µA	

1. Core frequency of 25 MHz.
2. Core frequency of 50 MHz.
3. Core frequency of 100 MHz.
4. Core frequency of 168 MHz.
5. Core frequency of 168 MHz. Nanoedge module at 84 MHz.
6. 100 MHz core and system clock, 100 MHz bus clock, and 25 MHz flash clock. MCG configured for FEI mode. All peripheral clocks disabled. CACHE is Enabled and Clock Gate (CG) = ALLOFF
7. 4 MHz core, system, and bus clock and 1 MHz flash clock. MCG configured for BLPE mode. All peripheral clocks disabled. Code executing from flash.
8. 4 MHz core, system, and bus clock and 1 MHz flash clock. MCG configured for BLPE mode. All peripheral clocks enabled but peripherals are not in active operation. Code executing from flash.
9. 2 MHz core, system, and bus clock and 1MHz flash clock. MCG configured for BLPE mode. All peripheral clocks disabled.

Table 7. Low power mode peripheral adders — typical value

Symbol	Description	Temperature (°C)						Unit
		-40	25	50	70	85	105	
$I_{IREFSTEN4MHz}$	4 MHz internal reference clock (IRC) adder. Measured by entering STOP or VLPS mode with 4 MHz IRC enabled.	56	56	56	56	56	56	µA
$I_{IREFSTEN32KHz}$	32 kHz internal reference clock (IRC) adder. Measured by entering STOP mode with the 32 kHz IRC enabled.	52	52	52	52	52	52	µA

Table continues on the next page...

Table 7. Low power mode peripheral adders — typical value (continued)

Symbol	Description	Temperature (°C)						Unit
		-40	25	50	70	85	105	
$I_{EREFSTEN4MHz}$	External 4 MHz crystal clock adder. Measured by entering STOP or VLPS mode with the crystal enabled.	206	228	237	245	251	258	uA
$I_{EREFSTEN32KHz}$	External 32 kHz crystal clock adder by means of the OSC0_CR[EREFSTEN and EREFSTEN] bits. Measured by entering all modes with the crystal enabled.							nA
	VLLS1							
	VLLS3	440	490	540	560	570	580	
	VLPS	440	490	540	560	570	580	
	STOP	510	560	560	560	610	680	
		510	560	560	560	610	680	
I_{CMP}	CMP peripheral adder measured by placing the device in VLLS1 mode with CMP enabled using the 6-bit DAC and a single external input for compare. Includes 6-bit DAC power consumption.	22	22	22	22	22	22	µA
I_{UART}	UART peripheral adder measured by placing the device in STOP or VLPS mode with selected clock source waiting for RX data at 115200 baud rate. Includes selected clock source power consumption.							µA
	MCGIRCLK (4 MHz internal reference clock)	66	66	66	66	66	66	
	OSCERCLK (4 MHz external crystal)	214	234	246	254	260	268	
I_{BG}	Bandgap adder when BGEN bit is set and device is placed in VLPx or VLLSx mode.	45	45	45	45	45	45	µA

2.2.5.1 Diagram: Typical IDD_RUN operating behavior

The following data was measured under these conditions:

- MCG in FBE for run mode, and BLPE for VLPR mode
- No GPIOs toggled
- Code execution from flash with cache enabled
- For the ALLOFF curve, all peripheral clocks are disabled except FTFA

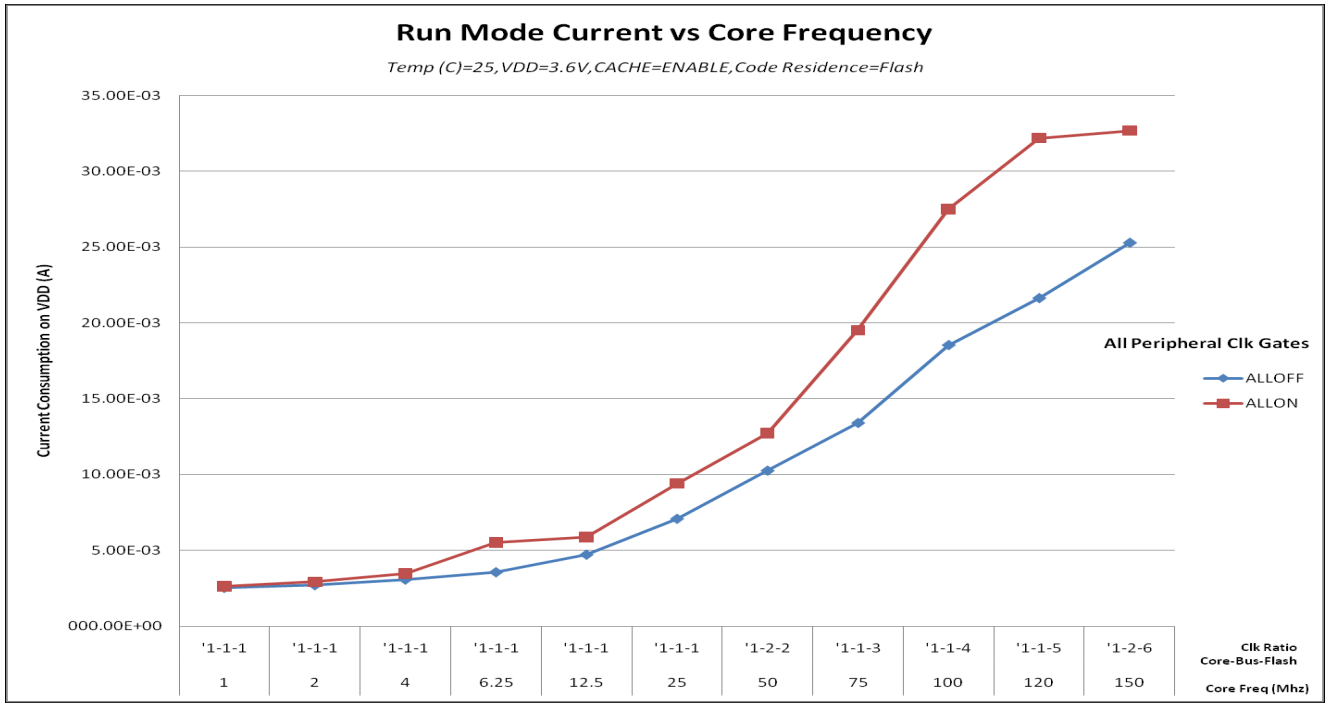

Figure 3. Run mode supply current vs. core frequency

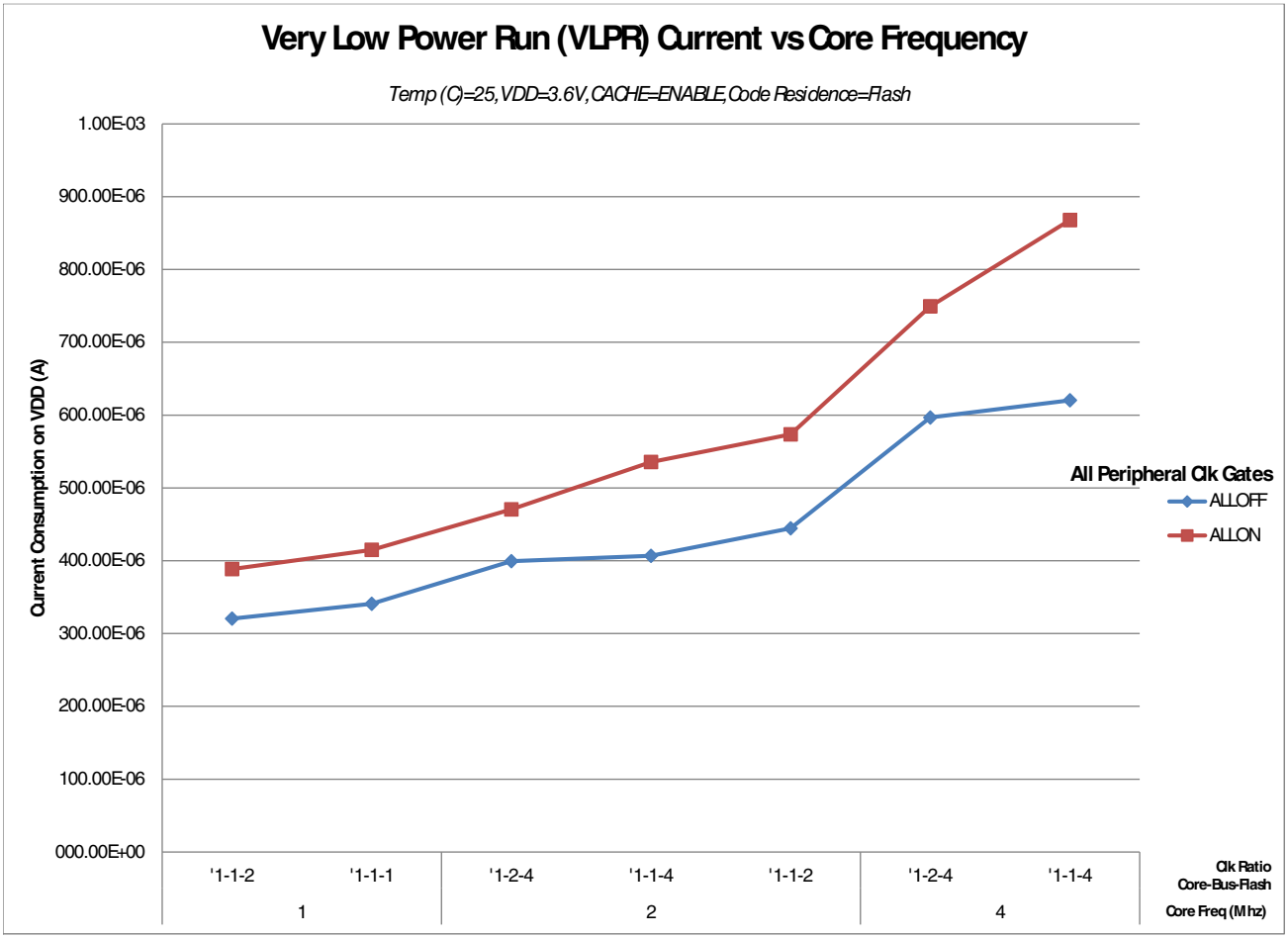

Figure 4. VLPR mode current vs. core frequency

2.2.6 EMC radiated emissions operating behaviors

NOTE

EMC measurements to IC-level IEC standards are available from NXP on request.

Table 8. EMC radiated emissions operating behaviors

Symbol	Description	Frequency band (MHz)	Typ.	Unit	Notes
V_{RE1}	Radiated emissions voltage, band 1	0.15–50	20	dBµV	1, 2
V_{RE2}	Radiated emissions voltage, band 2	50–150	18	dBµV	
V_{RE3}	Radiated emissions voltage, band 3	150–500	14	dBµV	
V_{RE4}	Radiated emissions voltage, band 4	500–1000	8	dBµV	
V_{RE_IEC}	IEC level	0.15–1000	L	—	2, 3

1. Determined according to IEC Standard 61967-1, *Integrated Circuits - Measurement of Electromagnetic Emissions, 150 kHz to 1 GHz Part 1: General Conditions and Definitions* and IEC Standard 61967-2, *Integrated Circuits - Measurement of Electromagnetic Emissions, 150 kHz to 1 GHz Part 2: Measurement of Radiated Emissions—TEM Cell and Wideband TEM Cell Method*. Measurements were made while the microcontroller was running basic application code. The reported emission level is the value of the maximum measured emission, rounded up to the next whole number, from among the measured orientations in each frequency range.
2. V_{DD} = 3.3 V, T_A = 25 °C, f_{OSC} = 10 MHz (crystal), f_{SYS} = 75 MHz, f_{BUS} = 25 MHz
3. Specified according to Annex D of IEC Standard 61967-2, *Measurement of Radiated Emissions—TEM Cell and Wideband TEM Cell Method*

2.2.7 Designing with radiated emissions in mind

To find application notes that provide guidance on designing your system to minimize interference from radiated emissions:

1. Go to www.nxp.com.
2. Perform a keyword search for “EMC design.”

2.2.8 Capacitance attributes

Table 9. Capacitance attributes

Symbol	Description	Min.	Max.	Unit
C_{IN_A}	Input capacitance: analog pins	—	7	pF
C_{IN_D}	Input capacitance: digital pins	—	7	pF

2.3 Switching specifications

2.3.1 Typical device clock specifications

Table 10. Typical device clock specifications

Symbol	Description	Min.	Max.	Unit	Notes
High Speed RUN mode					
f_{SYS}	System and core clock	—	168	MHz	
f_{BUS}	Bus and Flash clock	—	24	MHz	
f_{FPCK}	Fast peripheral clock	—	84	MHz	
f_{NANO}	Nano-edge clock	—	168	MHz	
Normal run mode					
f_{SYS}	System and core clock	—	100	MHz	
f_{BUS}	Bus and Flash clock	—	25	MHz	

Table continues on the next page...

Table 10. Typical device clock specifications (continued)

Symbol	Description	Min.	Max.	Unit	Notes
f_{FPCK}	Fast peripheral clock	—	100	MHz	
f_{NANO}	Nano-edge clock	—	200	MHz	
Low Speed RUN mode					
f_{SYS}	System and core clock	—	50	MHz	
f_{BUS}	Bus and Flash clock	—	25	MHz	
f_{FPCK}	Fast peripheral clock	—	100	MHz	
f_{NANO}	Nano-edge clock	—	200	MHz	

NOTE

When NaneEdge circuit is enabled, the following clock set must be followed:

1. NanoEdge clock source must be from the PLL output
2. NanoEdge clock must be 2x the fast peripheral clock
3. NanoEdge clock must in the range of 164 Mhz ~232 Mhz

2.3.2 General switching specifications

These general purpose specifications apply to all signals configured for GPIO, UART, and I^2C signals.

Table 11. General switching specifications

Symbol	Description	Min.	Max.	Unit	Notes
	GPIO pin interrupt pulse width (digital glitch filter disabled) — Synchronous path	1.5	—	Bus clock cycles	1
	External RESET and NMI pin interrupt pulse width — Asynchronous path	100	—	ns	2
	GPIO pin interrupt pulse width — Asynchronous path	16	—	ns	2
	Port rise and fall time Fast slew rate 1.71≤ VDD ≤ 2.7 V 2.7 ≤ VDD ≤ 3.6 V	 — —	 8 7	 ns ns	3
	Port rise and fall time Slow slew rate 1.71≤ VDD ≤ 2.7 V 2.7 ≤ VDD ≤ 3.6 V	 — —	 25 15	 ns ns	

1. The greater synchronous and asynchronous timing must be met.
2. This is the shortest pulse that is guaranteed to be recognized.
3. For high drive pins with high drive enabled, load is 75pF; other pins load (low drive) is 25pF.

2.4 Thermal specifications

2.4.1 Thermal operating requirements

Table 12. Thermal operating requirements

Symbol	Description	Min.	Max.	Unit
T_J	Die junction temperature	–40	125	°C
T_A	Ambient temperature	–40	105	°C

2.4.2 Thermal attributes

Table 13. Thermal attributes

Board type	Symbol	Description	100 LQFP	64 LQFP	48 LQFP	Unit	Notes
Single-layer (1S)	$R_{\theta JA}$	Thermal resistance, junction to ambient (natural convection)	62	64	71	°C/W	1
Four-layer (2s2p)	$R_{\theta JA}$	Thermal resistance, junction to ambient (natural convection)	49	46	47	°C/W	
Single-layer (1S)	$R_{\theta JMA}$	Thermal resistance, junction to ambient (200 ft./min. air speed)	52	52	58	°C/W	
Four-layer (2s2p)	$R_{\theta JMA}$	Thermal resistance, junction to ambient (200 ft./min. air speed)	43	39	41	°C/W	
—	$R_{\theta JB}$	Thermal resistance, junction to board	35	28	24	°C/W	2
—	$R_{\theta JC}$	Thermal resistance, junction to case	17	15	18	°C/W	3
—	Ψ_{JT}	Thermal characterization parameter, junction to package top outside center (natural convection)	3	2	2	°C/W	4

1. Determined according to JEDEC Standard JESD51-2, *Integrated Circuits Thermal Test Method Environmental Conditions—Natural Convection (Still Air)*, or EIA/JEDEC Standard JESD51-6, *Integrated Circuit Thermal Test Method Environmental Conditions—Forced Convection (Moving Air)*.
2. Determined according to JEDEC Standard JESD51-8, *Integrated Circuit Thermal Test Method Environmental Conditions—Junction-to-Board*.
3. Determined according to Method 1012.1 of MIL-STD 883, *Test Method Standard, Microcircuits*, with the cold plate temperature used for the case temperature. The value includes the thermal resistance of the interface material between the top of the package and the cold plate.

4. Determined according to JEDEC Standard JESD51-2, *Integrated Circuits Thermal Test Method Environmental Conditions—Natural Convection (Still Air)*.

3 Peripheral operating requirements and behaviors

3.1 Core modules

3.1.1 SWD Electricals

Table 14. SWD full voltage range electricals

Symbol	Description	Min.	Max.	Unit
	Operating voltage	1.71	3.6	V
J1	SWD_CLK frequency of operation • Serial wire debug	— —	 25	 MHz
J2	SWD_CLK cycle period	1/J1	—	ns
J3	SWD_CLK clock pulse width • Serial wire debug	 20	 —	 ns
J4	SWD_CLK rise and fall times	—	3	ns
J9	SWD_DIO input data setup time to SWD_CLK rise	10	—	ns
J10	SWD_DIO input data hold time after SWD_CLK rise	0	—	ns
J11	SWD_CLK high to SWD_DIO data valid	—	32	ns
J12	SWD_CLK high to SWD_DIO high-Z	5	—	ns

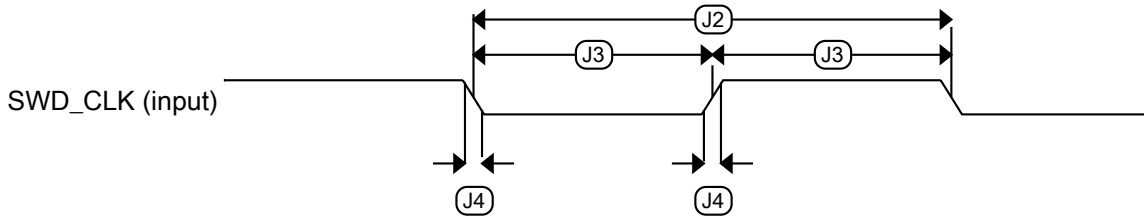

Figure 5. Serial wire clock input timing

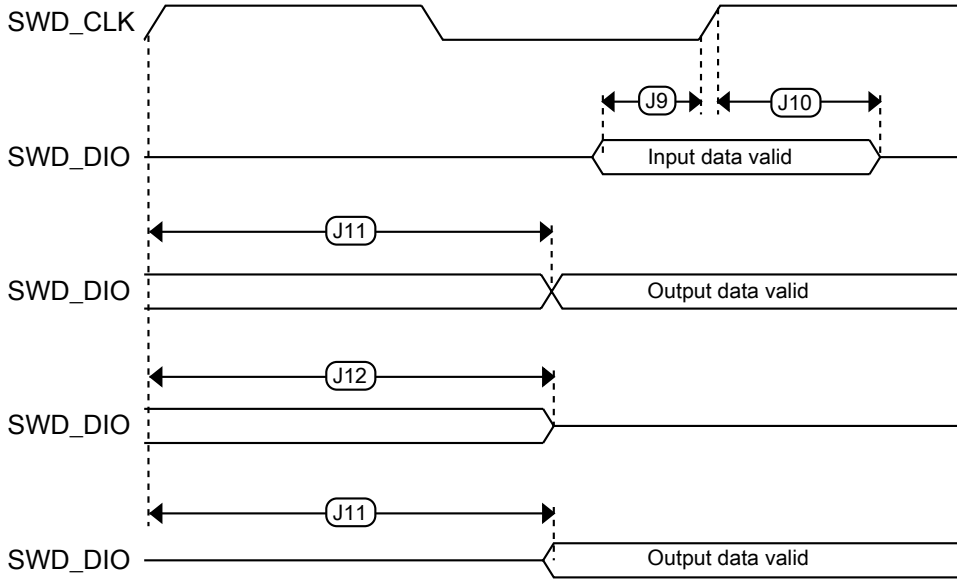

Figure 6. Serial wire data timing

3.1.2 JTAG electricals

Table 15. JTAG limited voltage range electricals

Symbol	Description	Min.	Max.	Unit
	Operating voltage	2.7	3.6	V
J1	TCLK frequency of operation			MHz
	• Boundary Scan	—	10	
	• JTAG and CJTAG	—	25	
	• Serial Wire Debug	—	50	
J2	TCLK cycle period	1/J1	—	ns
J3	TCLK clock pulse width			
	• Boundary Scan	50	—	ns
	• JTAG and CJTAG	20	—	ns
	• Serial Wire Debug	10	—	ns
J4	TCLK rise and fall times	—	3	ns
J5	Boundary scan input data setup time to TCLK rise	20	—	ns
J6	Boundary scan input data hold time after TCLK rise	2.0	—	ns
J7	TCLK low to boundary scan output data valid	—	28	ns

Table continues on the next page...

Table 15. JTAG limited voltage range electricals (continued)

Symbol	Description	Min.	Max.	Unit
J8	TCLK low to boundary scan output high-Z	—	25	ns
J9	TMS, TDI input data setup time to TCLK rise	8	—	ns
J10	TMS, TDI input data hold time after TCLK rise	1	—	ns
J11	TCLK low to TDO data valid	—	19	ns
J12	TCLK low to TDO high-Z	—	17	ns
J13	$\overline{\text{TRST}}$ assert time	100	—	ns
J14	$\overline{\text{TRST}}$ setup time (negation) to TCLK high	8	—	ns

Table 16. JTAG full voltage range electricals

Symbol	Description	Min.	Max.	Unit
	Operating voltage	1.71	3.6	V
J1	TCLK frequency of operation			MHz
	• Boundary Scan	0	10	
	• JTAG and CJTAG	0	20	
	• Serial Wire Debug	0	40	
J2	TCLK cycle period	1/J1	—	ns
J3	TCLK clock pulse width			
	• Boundary Scan	50	—	ns
	• JTAG and CJTAG	25	—	ns
	• Serial Wire Debug	12.5	—	ns
J4	TCLK rise and fall times	—	3	ns
J5	Boundary scan input data setup time to TCLK rise	20	—	ns
J6	Boundary scan input data hold time after TCLK rise	2.0	—	ns
J7	TCLK low to boundary scan output data valid	—	30.6	ns
J8	TCLK low to boundary scan output high-Z	—	25	ns
J9	TMS, TDI input data setup time to TCLK rise	8	—	ns
J10	TMS, TDI input data hold time after TCLK rise	1.0	—	ns
J11	TCLK low to TDO data valid	—	19.0	ns
J12	TCLK low to TDO high-Z	—	17.0	ns
J13	$\overline{\text{TRST}}$ assert time	100	—	ns
J14	$\overline{\text{TRST}}$ setup time (negation) to TCLK high	8	—	ns

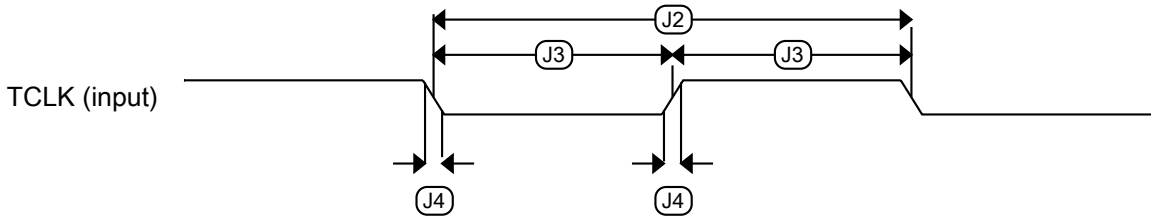

Figure 7. Test clock input timing

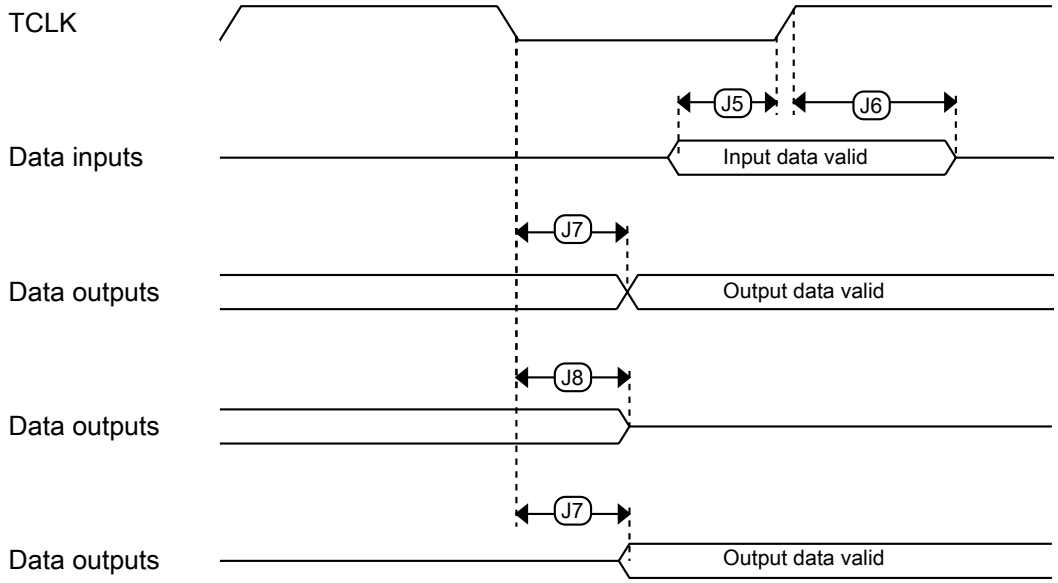

Figure 8. Boundary scan (JTAG) timing

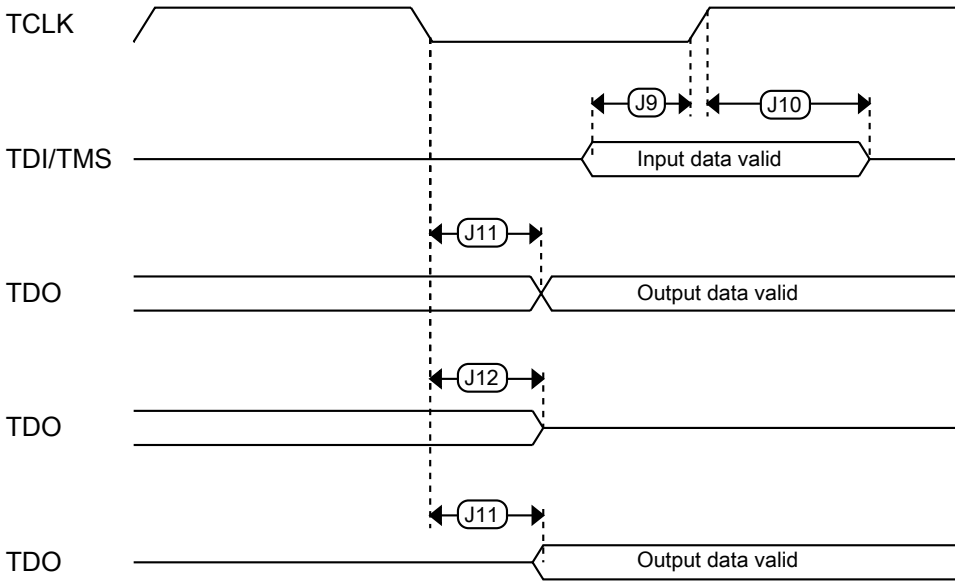

Figure 9. Test Access Port timing

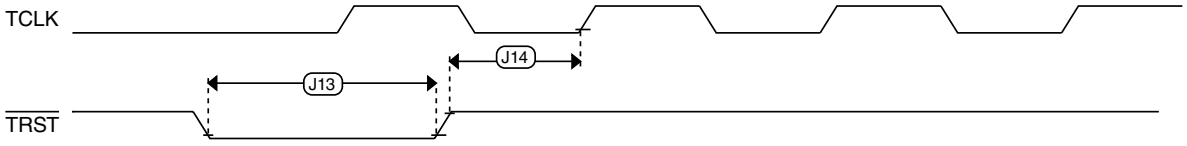

Figure 10. $\overline{\text{TRST}}$ timing

3.2 System modules

There are no specifications necessary for the device's system modules.

3.3 Clock modules

3.3.1 MCG specifications

Table 17. MCG specifications

Symbol	Description		Min.	Typ.	Max.	Unit	Notes
f_{ints_ft}	Internal reference frequency (slow clock) — factory trimmed at nominal VDD and 25 °C		—	32.768	—	kHz	
Δf_{ints_t}	Total deviation of internal reference frequency (slow clock) over voltage and temperature		—	+0.5/-0.7	± 2	%	
f_{ints_t}	Internal reference frequency (slow clock) — user trimmed		31.25	—	39.0625	kHz	
$\Delta_{fdco_res_t}$	Resolution of trimmed average DCO output frequency at fixed voltage and temperature — using SCTRIM and SCFTRIM		—	± 0.3	± 0.6	$\%f_{dco}$	1
$\Delta f_{dco_res_t}$	Resolution of trimmed average DCO output frequency at fixed voltage and temperature — using SCTRIM only		—	± 0.2	± 0.5	$\%f_{dco}$	1
Δf_{dco_t}	Total deviation of trimmed average DCO output frequency over voltage and temperature		—	± 0.5	± 2	$\%f_{dco}$	1
Δf_{dco_t}	Total deviation of trimmed average DCO output frequency over fixed voltage and temperature range of 0–70°C		—		± 1	$\%f_{dco}$	1
f_{intf_ft}	Internal reference frequency (fast clock) — factory trimmed at nominal VDD and 25°C		—	4	—	MHz	
Δf_{intf_ft}	Frequency deviation of internal reference frequency (fast clock) over voltage and temperature — factory trimmed at nominal VDD and 25 °C		—	+1/-2	± 5	% f_{intf_ft}	
f_{intf_t}	Internal reference frequency (fast clock) — user trimmed at nominal VDD and 25 °C		3	—	5	MHz	
f_{loc_low}	Loss of external clock minimum frequency — RANGE = 00		(3/5) x f_{ints_t}	—	—	kHz	
f_{loc_high}	Loss of external clock minimum frequency — RANGE = 01, 10, or 11		(16/5) x f_{ints_t}	—	—	kHz	
FLL							
f_{fll_ref}	FLL reference frequency range		31.25	—	39.0625	kHz	
f_{dco}	DCO output frequency range	Low range (DRS=00) $640 \times f_{fll_ref}$	20	20.97	25	MHz	2, 3
		Mid range (DRS=01) $1280 \times f_{fll_ref}$	40	41.94	50	MHz	
		Mid-high range (DRS=10) $1920 \times f_{fll_ref}$	60	62.91	75	MHz	
		High range (DRS=11) $2560 \times f_{fll_ref}$	80	83.89	100	MHz	
$f_{dco_t_DMX32}$	DCO output frequency	Low range (DRS=00) $732 \times f_{fll_ref}$	—	23.99	—	MHz	4, 5

Table continues on the next page...

Table 17. MCG specifications (continued)

Symbol	Description		Min.	Typ.	Max.	Unit	Notes
		Mid range (DRS=01) 1464 × f_{fll_ref}	—	47.97	—	MHz	
		Mid-high range (DRS=10) 2197 × f_{fll_ref}	—	71.99	—	MHz	
		High range (DRS=11) 2929 × f_{fll_ref}	—	95.98	—	MHz	
J_{cyc_fll}	FLL period jitter • f_{DCO} = 48 MHz • f_{DCO} = 98 MHz		— —	180 150	— —	ps	
$t_{fll_acquire}$	FLL target frequency acquisition time		—	—	1	ms	6
PLL							
f_{pll_ref}	PLL reference frequency range		8	—	16	MHz	
f_{vcoclk_2x}	VCO output frequency		220	—	480	MHz	
f_{vcoclk}	PLL output frequency		110	—	240	MHz	
f_{vcoclk_90}	PLL quadrature output frequency		110	—	240	MHz	
I_{pll}	PLL operating current • VCO @ 176 MHz ($f_{osc_hi_1}$ = 32 MHz, f_{pll_ref} = 8 MHz, VDIV multiplier = 22)		—	2.8	—	mA	7
I_{pll}	PLL operating current • VCO @ 360 MHz ($f_{osc_hi_1}$ = 32 MHz, f_{pll_ref} = 8 MHz, VDIV multiplier = 45)		—	4.7	—	mA	7
J_{cyc_pll}	PLL period jitter (RMS) • f_{vco} = 48 MHz • f_{vco} = 120 MHz		— —	120 75	— —	ps ps	8
J_{acc_pll}	PLL accumulated jitter over 1µs (RMS) • f_{vco} = 48 MHz • f_{vco} = 120 MHz		— —	1350 600	— —	ps ps	8
D_{unl}	Lock exit frequency tolerance		± 4.47	—	± 5.97	%	
t_{pll_lock}	Lock detector detection time		—	—	150 × 10^{-6} + 1075(1/f_{pll_ref})	s	9

1. This parameter is measured with the internal reference (slow clock) being used as a reference to the FLL (FEI clock mode).
2. These typical values listed are with the slow internal reference clock (FEI) using factory trim and DMX32=0.
3. The resulting system clock frequencies should not exceed their maximum specified values. The DCO frequency deviation (Δf_{dco_t}) over voltage and temperature should be considered.
4. These typical values listed are with the slow internal reference clock (FEI) using factory trim and DMX32=1.
5. The resulting clock frequency must not exceed the maximum specified clock frequency of the device.
6. This specification applies to any time the FLL reference source or reference divider is changed, trim value is changed, DMX32 bit is changed, DRS bits are changed, or changing from FLL disabled (BLPE, BLPI) to FLL enabled (FEI, FEE, FBE, FBI). If a crystal/resonator is being used as the reference, this specification assumes it is already running.
7. Excludes any oscillator currents that are also consuming power while PLL is in operation.

8. This specification was obtained using a NXP developed PCB. PLL jitter is dependent on the noise characteristics of each PCB and results will vary.
9. This specification applies to any time the PLL VCO divider or reference divider is changed, or changing from PLL disabled (BLPE, BLPI) to PLL enabled (PBE, PEE). If a crystal/resonator is being used as the reference, this specification assumes it is already running.

3.3.2 Oscillator electrical specifications

3.3.2.1 Oscillator DC electrical specifications

Table 18. Oscillator DC electrical specifications

Symbol	Description	Min.	Typ.	Max.	Unit	Notes
V_{DD}	Supply voltage	1.71	—	3.6	V	
I_{DDOSC}	Supply current — low-power mode (HGO=0)					1
	• 32 kHz	—	500	—	nA	
	• 4 MHz	—	200	—	µA	
	• 8 MHz	—	300	—	µA	
	• 16 MHz	—	950	—	µA	
	• 24 MHz	—	1.2	—	mA	
	• 32 MHz	—	1.5	—	mA	
I_{DDOSC}	Supply current — high gain mode (HGO=1)					1
	• 4 MHz	—	400	—	µA	
	• 8 MHz	—	500	—	µA	
	• 16 MHz	—	2.5	—	mA	
	• 24 MHz	—	3	—	mA	
	• 32 MHz	—	4	—	mA	
C_x	EXTAL load capacitance	—	—	—		2, 3
C_y	XTAL load capacitance	—	—	—		2, 3
R_F	Feedback resistor — low-frequency, low-power mode (HGO=0)	—	—	—	MΩ	2, 4
	Feedback resistor — low-frequency, high-gain mode (HGO=1)	—	10	—	MΩ	
	Feedback resistor — high-frequency, low-power mode (HGO=0)	—	—	—	MΩ	
	Feedback resistor — high-frequency, high-gain mode (HGO=1)	—	1	—	MΩ	
R_S	Series resistor — low-frequency, low-power mode (HGO=0)	—	—	—	kΩ	
	Series resistor — low-frequency, high-gain mode (HGO=1)	—	200	—	kΩ	

Table continues on the next page...

Table 18. Oscillator DC electrical specifications (continued)

Symbol	Description	Min.	Typ.	Max.	Unit	Notes
	Series resistor — high-frequency, low-power mode (HGO=0)	—	—	—	kΩ	
	Series resistor — high-frequency, high-gain mode (HGO=1)	—	0	—	kΩ	
V_{pp}[5]	Peak-to-peak amplitude of oscillation (oscillator mode) — low-frequency, low-power mode (HGO=0)	—	0.6	—	V	
	Peak-to-peak amplitude of oscillation (oscillator mode) — low-frequency, high-gain mode (HGO=1)	—	V_{DD}	—	V	
	Peak-to-peak amplitude of oscillation (oscillator mode) — high-frequency, low-power mode (HGO=0)	—	0.6	—	V	
	Peak-to-peak amplitude of oscillation (oscillator mode) — high-frequency, high-gain mode (HGO=1)	—	V_{DD}	—	V	

1. V_{DD}=3.3 V, Temperature =25 °C
2. See crystal or resonator manufacturer's recommendation
3. C_x,C_y can be provided by using the integrated capacitors when the low frequency oscillator (RANGE = 00) is used. For all other cases external capacitors must be used.
4. When low power mode is selected, R_F is integrated and must not be attached externally.
5. The EXTAL and XTAL pins should only be connected to required oscillator components and must not be connected to any other devices.

3.3.2.2 Oscillator frequency specifications

Table 19. Oscillator frequency specifications

Symbol	Description	Min.	Typ.	Max.	Unit	Notes
f_{osc_lo}	Oscillator crystal or resonator frequency — low-frequency mode (MCG_C2[RANGE]=00)	32	—	40	kHz	
f_{ec_extal}	Input clock frequency (external clock mode)	—	—	48	MHz	1, 2
t_{dc_extal}	Input clock duty cycle (external clock mode)	40	50	60	%	
t_{cst}	Crystal startup time — 32 kHz low-frequency, low-power mode (HGO=0)	—	1000	—	ms	3, 4

1. Other frequency limits may apply when external clock is being used as a reference for the FLL or PLL.
2. When transitioning from FEI or FBI to FBE mode, restrict the frequency of the input clock so that, when it is divided by FRDIV, it remains within the limits of the DCO input clock frequency.
3. Proper PC board layout procedures must be followed to achieve specifications.
4. Crystal startup time is defined as the time between the oscillator being enabled and the OSCINIT bit in the MCG_S register being set.

NOTE

The 32 kHz oscillator works in low power mode by default and cannot be moved into high power/gain mode.

3.4 Memories and memory interfaces

3.4.1 Flash electrical specifications

This section describes the electrical characteristics of the flash memory module.

3.4.1.1 Flash timing specifications — program and erase

The following specifications represent the amount of time the internal charge pumps are active and do not include command overhead.

Table 20. NVM program/erase timing specifications

Symbol	Description	Min.	Typ.	Max.	Unit	Notes
t_{hvpgm4}	Longword Program high-voltage time	—	7.5	18	µs	—
$t_{hversscr}$	Sector Erase high-voltage time	—	13	113	ms	1
$t_{hversall}$	Erase All high-voltage time	—	208	1808	ms	1

1. Maximum time based on expectations at cycling end-of-life.

3.4.1.2 Flash timing specifications — commands

Table 21. Flash command timing specifications

Symbol	Description	Min.	Typ.	Max.	Unit	Notes
$t_{rd1sec4k}$	Read 1s Section execution time (flash sector)	—	—	60	µs	1
t_{pgmchk}	Program Check execution time	—	—	45	µs	1
t_{rdrsrc}	Read Resource execution time	—	—	30	µs	1
t_{pgm4}	Program Longword execution time	—	65	145	µs	—
t_{ersscr}	Erase Flash Sector execution time	—	14	114	ms	2
t_{rd1all}	Read 1s All Blocks execution time	—	—	0.9	ms	1
t_{rdonce}	Read Once execution time	—	—	25	µs	1
$t_{pgmonce}$	Program Once execution time	—	65	—	µs	—
t_{ersall}	Erase All Blocks execution time	—	280	2100	ms	2
t_{vfykey}	Verify Backdoor Access Key execution time	—	—	30	µs	1

1. Assumes 25 MHz flash clock frequency.
2. Maximum times for erase parameters based on expectations at cycling end-of-life.

3.4.1.3 Flash high voltage current behaviors

Table 22. Flash high voltage current behaviors

Symbol	Description	Min.	Typ.	Max.	Unit
I_{DD_PGM}	Average current adder during high voltage flash programming operation	—	2.5	6.0	mA
I_{DD_ERS}	Average current adder during high voltage flash erase operation	—	1.5	4.0	mA

3.4.1.4 Reliability specifications

Table 23. NVM reliability specifications

Symbol	Description	Min.	Typ.[1]	Max.	Unit	Notes
Program Flash						
$t_{nvmretp10k}$	Data retention after up to 10 K cycles	5	50	—	years	—
$t_{nvmretp1k}$	Data retention after up to 1 K cycles	20	100	—	years	—
$n_{nvmcycp}$	Cycling endurance	10 K	50 K	—	cycles	2

1. Typical data retention values are based on measured response accelerated at high temperature and derated to a constant 25 °C use profile. Engineering Bulletin EB618 does not apply to this technology. Typical endurance defined in Engineering Bulletin EB619.
2. Cycling endurance represents number of program/erase cycles at –40 °C ≤ T_j ≤ 125 °C.

3.5 Security and integrity modules

There are no specifications necessary for the device's security and integrity modules.

3.6 Analog

3.6.1 12-bit cyclic Analog-to-Digital Converter (ADC) parameters

NOTE

The maximum values represent characterized results equivalent to the mean plus three times the standard deviation (mean+3σ).

Table 24. 12-bit ADC electrical specifications

Characteristic	Symbol	Min	Typ	Max	Unit
Recommended Operating Conditions					
Supply Voltage[1]	V_{DDA}	2.7	3.3	3.6	V
V_{refh} Supply Voltage[1, 2]	Vrefhx	2.7		V_{DDA}	V
ADC Conversion Clock[3]	f_{ADCCLK}	0.6		25	MHz
Conversion Range	R_{AD}	V_{REFL}		V_{REFH}	V
Input Voltage Range External Reference Internal Reference	V_{ADIN}	 V_{REFL} V_{SSA}		 V_{REFH} V_{DDA}	V
Timing and Power					
Conversion Time	t_{ADC}		6		ADC Clock Cycles
ADC Power-Up Time (from adc_pdn)	t_{ADPU}		13		ADC Clock Cycles
ADC RUN Current (per ADC block) • at 666.7 kHz ADC Clock, LP mode • ≤ 8.33 MHz ADC Clock, 00 mode • ≤ 12.5 MHz ADC Clock, 01 mode • ≤ 16.67 MHz ADC Clock, 10 mode • ≤ 20 MHz ADC Clock, 11 mode • ≤ 25 MHz ADC Clock, 11 mode	I_{ADRUN}		 1.1 6.9 11.9 20.4 25.9 26.3	 1.36 8.09 14.05 23.86 31.03 31.40	mA
ADC Powerdown Current (adc_pdn enabled)	$I_{ADPWRDWN}$		0.02		µA
V_{REFH} Current	I_{VREFH}		0.001		µA
Accuracy (DC or Absolute)					
Integral non-Linearity[4]	INL		+/- 3	+/- 5	LSB[5]
Differential non-Linearity[4]	DNL		+/- 0.6	+/- 0.9	LSB[5]
Monotonicity					
Offset[6] • 1x gain mode • 2x gain mode • 4x gain mode	V_{OFFSET}			 +/- 25 +/- 20 +50, -10	LSB[4]
Gain Error	E_{GAIN}			0.0002	%
AC Specifications[7]					
Signal to Noise Ratio	SNR		59		dB
Total Harmonic Distortion	THD		64		dB
Spurious Free Dynamic Range	SFDR		65		dB
Signal to Noise plus Distortion	SINAD		59		dB
Effective Number of Bits	ENOB		9.1		bits
ADC Inputs					
Input Leakage Current	I_{IN}		0	+/-2	µA

Table continues on the next page...

Table 24. 12-bit ADC electrical specifications (continued)

Characteristic	Symbol	Min	Typ	Max	Unit
Input Injection Current [8]	I_{INJ}			+/-3	mA
Input Capacitance Sampling Capacitor	C_{ADI}		4.8		pF

1. If the ADC's reference is from V_{DDA}: When V_{DDA} is below 2.7 V, then the ADC functions, but the ADC specifications are not guaranteed.
2. When the input is at the V_{refl} level, then the resulting output will be all zeros (hex 000), plus any error contribution due to offset and gain error. When the input is at the V_{refh} level, then the output will be all ones (hex FFF), minus any error contribution due to offset and gain error.
3. ADC clock duty cycle min/max is 45/55% .
4. D_{NL} and I_{NL} conversion accuracy is not guaranteed from V_{REFL} to V_{REFL} + 0025 and V_{REFH} to V_{REFH}-0025.
5. LSB = Least Significant Bit = 0.806 mV at 3.3 V VDDA, x1 Gain Setting
6. Offset over the conversion range of 0025 to 4070, with internal/external reference.
7. Measured when converting a 1 kHz input Full Scale sine wave.
8. The current that can be *injected into* or *sourced from* an unselected ADC input, without affecting the performance of the ADC.

3.6.1.1 Equivalent circuit for ADC inputs

The following figure shows the ADC input circuit during sample and hold. S1 and S2 are always opened/closed at non-overlapping phases, and both S1 and S2 operate at the ADC clock frequency. The following equation gives equivalent input impedance when the input is selected.

$$\frac{1}{(\text{ADC ClockRate}) \times 1.4\text{x}10^{-12}} + 100ohm + 125ohm$$

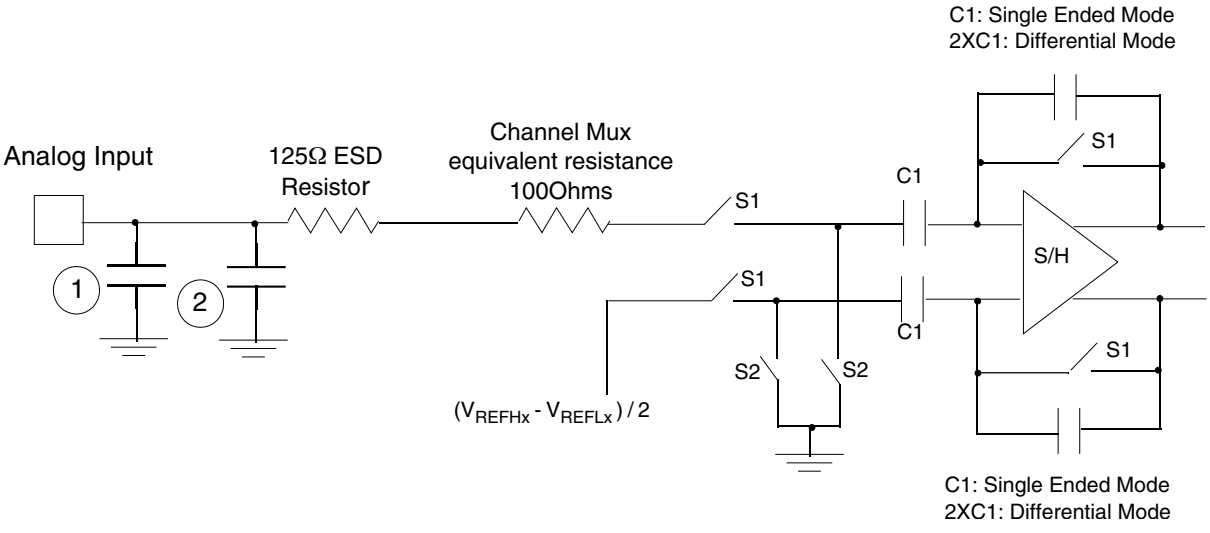

1. Parasitic capacitance due to package, pin-to-pin and pin-to-package base coupling = 1.8pF

2. Parasitic capacitance due to the chip bond pad, ESD protection devices and signal routing = 2.04pF
3. Sampling capacitor at the sample and hold circuit. Capacitor C1 (4.8pF) is normally disconnected from the input, and is only connected to the input at sampling time.
4. S1 and S2 switch phases are non-overlapping and operate at the ADC clock frequency

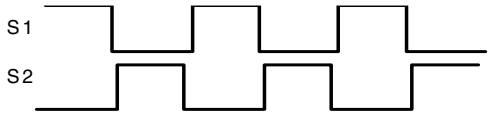

Figure 11. Equivalent circuit for A/D loading

3.6.2 CMP and 6-bit DAC electrical specifications

Table 25. Comparator and 6-bit DAC electrical specifications

Symbol	Description	Min.	Typ.	Max.	Unit
V_{DD}	Supply voltage	1.71	—	3.6	V
I_{DDHS}	Supply current, high-speed mode (EN = 1, PMODE = 1)	—	—	200	µA
I_{DDLS}	Supply current, low-speed mode (EN = 1, PMODE = 0)	—	—	20	µA
V_{AIN}	Analog input voltage	V_{SS}	—	V_{DD}	V
V_{AIO}	Analog input offset voltage	—	—	20	mV
V_H	Analog comparator hysteresis[1]				
	• CR0[HYSTCTR] = 00	—	5	—	mV
	• CR0[HYSTCTR] = 01	—	10	—	mV
	• CR0[HYSTCTR] = 10	—	20	—	mV
	• CR0[HYSTCTR] = 11	—	30	—	mV
V_{CMPOh}	Output high	V_{DD} – 0.5	—	—	V
V_{CMPOl}	Output low	—	—	0.5	V
t_{DHS}	Propagation delay, high-speed mode (EN = 1, PMODE = 1)	20	50	200	ns
t_{DLS}	Propagation delay, low-speed mode (EN = 1, PMODE = 0)	80	250	600	ns
	Analog comparator initialization delay[2]	—	—	40	µs
I_{DAC6b}	6-bit DAC current adder (enabled)	—	7	—	µA
INL	6-bit DAC integral non-linearity	–0.5	—	0.5	LSB[3]
DNL	6-bit DAC differential non-linearity	–0.3	—	0.3	LSB

1. Typical hysteresis is measured with input voltage range limited to 0.7 to V_{DD} – 0.7 V.
2. Comparator initialization delay is defined as the time between software writes to change control inputs (writes to DACEN, VRSEL, PSEL, MSEL, VOSEL) and the comparator output settling to a stable level.

3. 1 LSB = $V_{reference}/64$

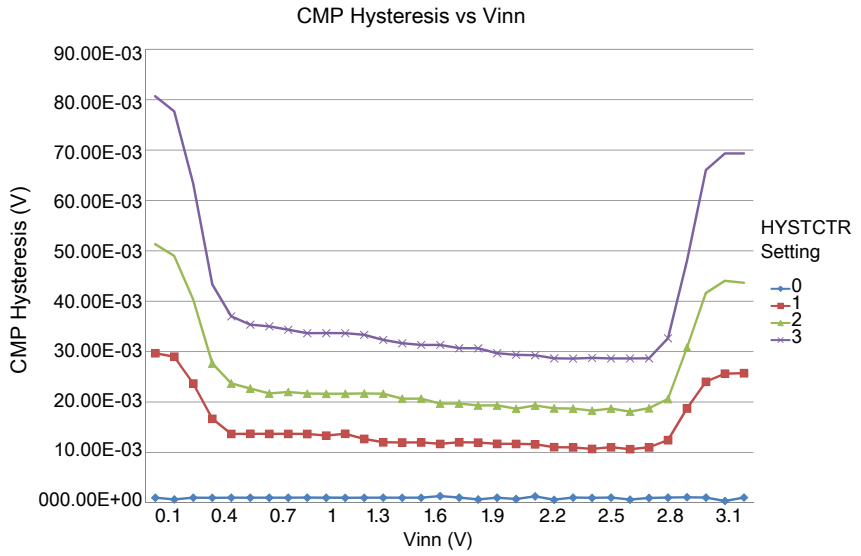

Figure 12. Typical hysteresis vs. Vin level (V_{DD} = 3.3 V, PMODE = 0)

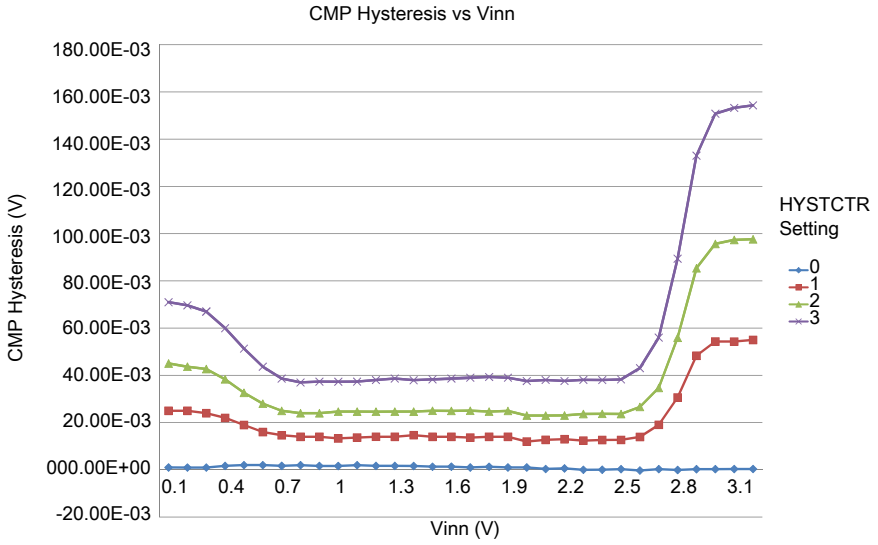

Figure 13. Typical hysteresis vs. Vin level (V_{DD} = 3.3 V, PMODE = 1)

3.6.3 12-bit DAC electrical characteristics

3.6.3.1 12-bit DAC operating requirements

Table 26. 12-bit DAC operating requirements

Symbol	Desciption	Min.	Max.	Unit	Notes
V_{DDA}	Supply voltage	1.71	3.6	V	
V_{DACR}	Reference voltage	1.13	3.6	V	1
C_L	Output load capacitance	—	100	pF	2
I_L	Output load current	—	1	mA	

1. The DAC reference can be selected to be V_{DDA} or V_{REF_OUT}.
2. A small load capacitance (47 pF) can improve the bandwidth performance of the DAC.

3.6.3.2 12-bit DAC operating behaviors

Table 27. 12-bit DAC operating behaviors

Symbol	Description	Min.	Typ.	Max.	Unit	Notes
I_{DDA_DACLP}	Supply current — low-power mode	—	—	330	µA	
I_{DDA_DACHP}	Supply current — high-speed mode	—	—	1200	µA	
t_{DACLP}	Full-scale settling time (0x080 to 0xF7F) — low-power mode	—	100	200	µs	1
t_{DACHP}	Full-scale settling time (0x080 to 0xF7F) — high-power mode	—	15	30	µs	1
$t_{CCDACLP}$	Code-to-code settling time (0xBF8 to 0xC08) • High-speed mode • Low speed mode	—	1	5	µs	1
$V_{dacoutl}$	DAC output voltage range low — high-speed mode, no load, DAC set to 0x000	—	—	100	mV	
$V_{dacouth}$	DAC output voltage range high — high-speed mode, no load, DAC set to 0xFFF	V_{DACR} –100	—	V_{DACR}	mV	
INL	Integral non-linearity error — high speed mode	—	—	±8	LSB	2
DNL	Differential non-linearity error — V_{DACR} > 2 V	—	—	±1	LSB	3
DNL	Differential non-linearity error — V_{DACR} = VREF_OUT	—	—	±1	LSB	4
V_{OFFSET}	Offset error	—	±0.4	±0.8	%FSR	5
E_G	Gain error	—	±0.1	±0.6	%FSR	5
PSRR	Power supply rejection ratio, V_{DDA} ≥ 2.4 V	60	—	90	dB	
T_{CO}	Temperature coefficient offset voltage	—	3.7	—	µV/C	6
T_{GE}	Temperature coefficient gain error	—	0.000421	—	%FSR/C	
Rop	Output resistance (load = 3 kΩ)	—	—	250	Ω	
SR	Slew rate -80h→ F7Fh→ 80h				V/µs	

Table continues on the next page...

Table 27. 12-bit DAC operating behaviors (continued)

Symbol	Description	Min.	Typ.	Max.	Unit	Notes
	• High power (SP_{HP})	1.2	1.7	—		
	• Low power (SP_{LP})	0.05	0.12	—		
BW	3dB bandwidth				kHz	
	• High power (SP_{HP})	550	—	—		
	• Low power (SP_{LP})	40	—	—		

1. Settling within ±1 LSB
2. The INL is measured for 0 + 100 mV to V_{DACR} −100 mV
3. The DNL is measured for 0 + 100 mV to V_{DACR} −100 mV
4. The DNL is measured for 0 + 100 mV to V_{DACR} −100 mV with V_{DDA} > 2.4 V
5. Calculated by a best fit curve from V_{SS} + 100 mV to V_{DACR} − 100 mV
6. V_{DDA} = 3.0 V, reference select set for V_{DDA} (DACx_CO:DACRFS = 1), high power mode (DACx_C0:LPEN = 0), DAC set to 0x800, temperature range is across the full range of the device

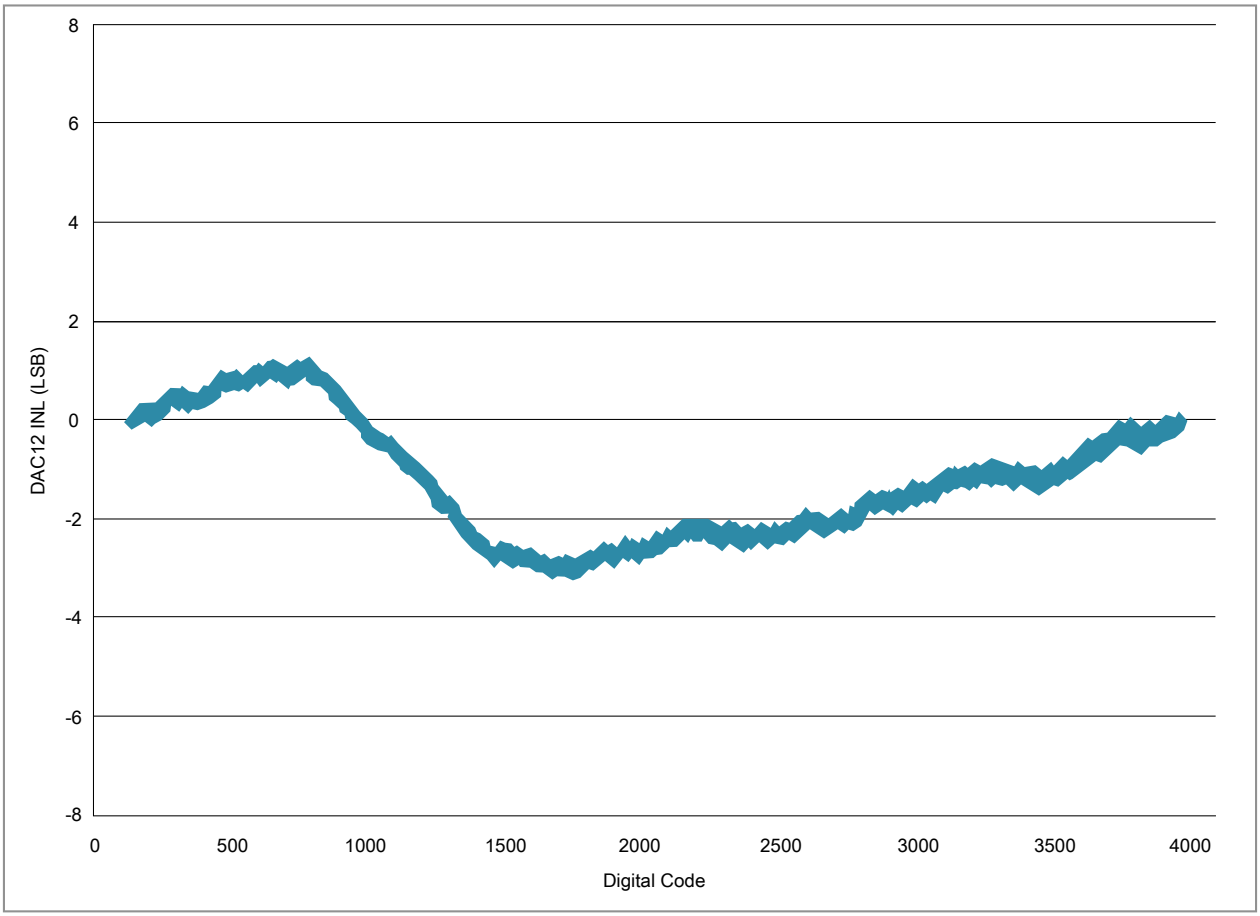

Figure 14. Typical INL error vs. digital code

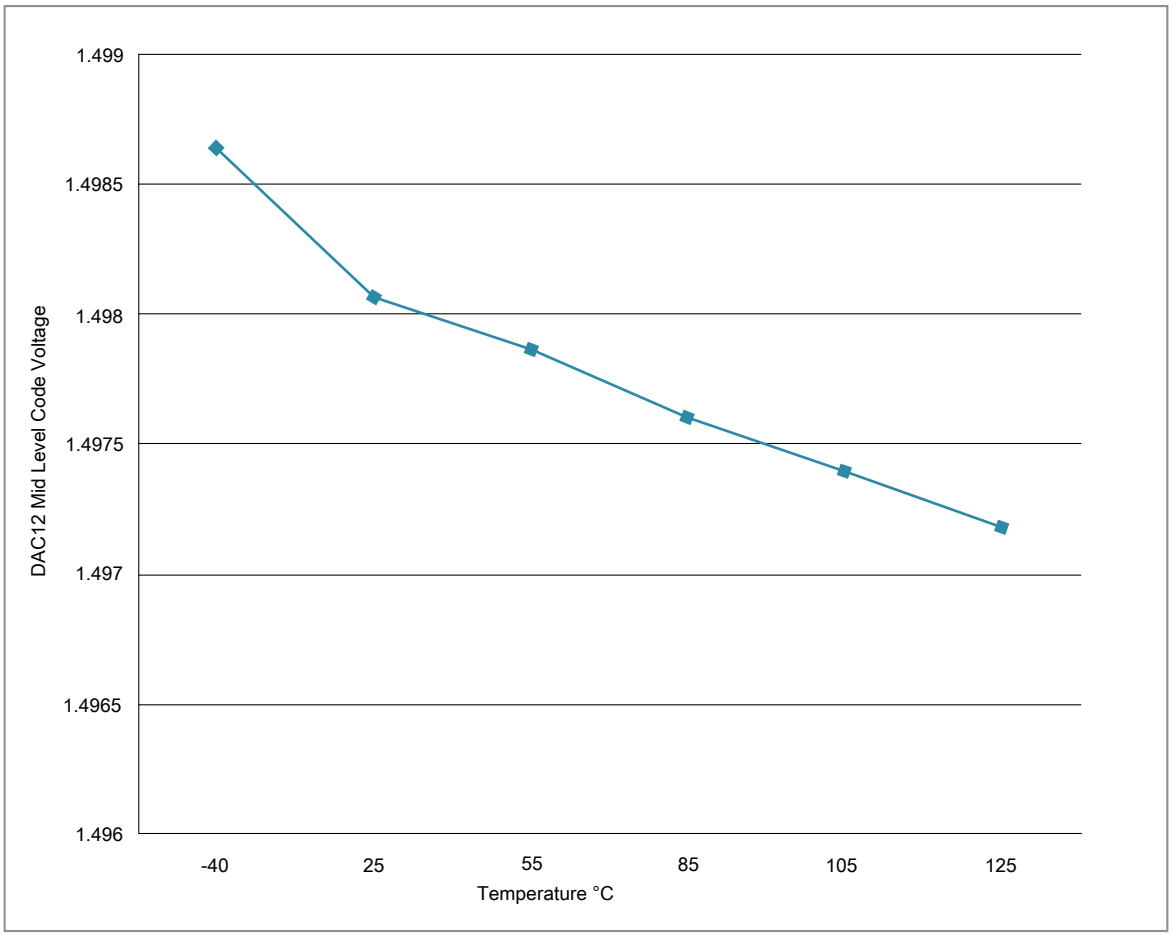

Figure 15. Offset at half scale vs. temperature

3.7 Timers

See General switching specifications.

3.8 Enhanced NanoEdge PWM characteristics

Table 28. NanoEdge PWM timing parameters - 100 Mhz operating frequency

Characteristic	Symbol	Min.	Typ.	Max.	Unit
PWM clock frequency			100		MHz
NanoEdge Placement (NEP) Step Size[1], [2]	pwmp		312		ps
Delay for fault input activating to PWM output deactivated		1			ns

Table continues on the next page...

Table 28. NanoEdge PWM timing parameters - 100 Mhz operating frequency (continued)

Characteristic	Symbol	Min.	Typ.	Max.	Unit
Power-up Time[3]	t_{pu}		25		µs

1. Reference 100 MHz in NanoEdge Placement mode.
2. Temperature and voltage variations do not affect NanoEdge Placement step size.
3. Powerdown to NanoEdge mode transition.

Table 29. NanoEdge PWM timing parameters - 84 Mhz operating frequency

Characteristic	Symbol	Min.	Typ.	Max.	Unit
PWM clock frequency			84		MHz
NanoEdge Placement (NEP) Step Size[1], [2]	pwmp		372		ps
Delay for fault input activating to PWM output deactivated		1			ns
Power-up Time[3]	t_{pu}		30		µs

1. Reference 84 MHz in NanoEdge Placement mode.
2. Temperature and voltage variations do not affect NanoEdge Placement step size.
3. Powerdown to NanoEdge mode transition.

3.9 Communication interfaces

3.9.1 SPI (DSPI) switching specifications (limited voltage range)

The DMA Serial Peripheral Interface (DSPI) provides a synchronous serial bus with master and slave operations. Many of the transfer attributes are programmable. The tables below provide DSPI timing characteristics for classic SPI timing modes. Refer to the DSPI chapter of the Reference Manual for information on the modified transfer formats used for communicating with slower peripheral devices.

NOTE

Fast pads:

- SIN: PTE19
- SOUT: PTE18
- SCK: PTE17
- PCS: PTE16

Open drain pads:

- SIN: PTC7
- SOUT: PTC6

Table 30. Master mode DSPI timing for normal pads (limited voltage range)

Num	Description	Min.	Max.	Unit	Notes
	Operating voltage	2.7	3.6	V	
	Frequency of operation	—	25	MHz	
DS1	DSPI_SCK output cycle time	2 x t_{BUS}	—	ns	
DS2	DSPI_SCK output high/low time	(t_{SCK}/2) – 2	(t_{SCK}/2) + 2	ns	
DS3	DSPI_PCS*n* to DSPI_SCK output valid	(t_{BUS} x 2) – 2	—	ns	1
DS4	DSPI_SCK to DSPI_PCS*n* output hold	(t_{BUS} x 2) – 2	—	ns	2
DS5	DSPI_SCK to DSPI_SOUT valid	—	8.5	ns	
DS6	DSPI_SCK to DSPI_SOUT invalid	–2	—	ns	
DS7	DSPI_SIN to DSPI_SCK input setup	17	—	ns	
DS8	DSPI_SCK to DSPI_SIN input hold	0	—	ns	

1. The delay is programmable in SPIx_CTARn[PSSCK] and SPIx_CTARn[CSSCK].
2. The delay is programmable in SPIx_CTARn[PASC] and SPIx_CTARn[ASC].

Table 31. Master mode DSPI timing for fast pads (limited voltage range)

Num	Description	Min.	Max.	Unit	Notes
	Operating voltage	2.7	3.6	V	
	Frequency of operation	—	37.5	MHz	
DS1	DSPI_SCK output cycle time	2 x t_{BUS}	—	ns	
DS2	DSPI_SCK output high/low time	(t_{SCK}/2) – 2	(t_{SCK}/2) + 2	ns	
DS3	DSPI_PCS*n* to DSPI_SCK output valid	(t_{BUS} x 2) – 2	—	ns	1
DS4	DSPI_SCK to DSPI_PCS*n* output hold	(t_{BUS} x 2) – 2	—	ns	2
DS5	DSPI_SCK to DSPI_SOUT valid	—	8.5	ns	
DS6	DSPI_SCK to DSPI_SOUT invalid	–2	—	ns	
DS7	DSPI_SIN to DSPI_SCK input setup	13	—	ns	
DS8	DSPI_SCK to DSPI_SIN input hold	0	—	ns	

1. The delay is programmable in SPIx_CTARn[PSSCK] and SPIx_CTARn[CSSCK].
2. The delay is programmable in SPIx_CTARn[PASC] and SPIx_CTARn[ASC].

Table 32. Master mode DSPI timing for open drain pads (limited voltage range)

Num	Description	Min.	Max.	Unit	Notes
	Operating voltage	2.7	3.6	V	

Table continues on the next page...

Table 32. Master mode DSPI timing for open drain pads (limited voltage range) (continued)

Num	Description	Min.	Max.	Unit	Notes
	Frequency of operation	—	25	MHz	
DS1	DSPI_SCK output cycle time	2 x t_{BUS}	—	ns	
DS2	DSPI_SCK output high/low time	(t_{SCK}/2) – 2	(t_{SCK}/2) + 2	ns	
DS3	DSPI_PCS*n* to DSPI_SCK output valid	(t_{BUS} x 2) – 2	—	ns	1
DS4	DSPI_SCK to DSPI_PCS*n* output hold	(t_{BUS} x 2) – 2	—	ns	2
DS5	DSPI_SCK to DSPI_SOUT valid	—	15.5	ns	
DS6	DSPI_SCK to DSPI_SOUT invalid	–3	—	ns	
DS7	DSPI_SIN to DSPI_SCK input setup	17	—	ns	
DS8	DSPI_SCK to DSPI_SIN input hold	0	—	ns	

1. The delay is programmable in SPIx_CTARn[PSSCK] and SPIx_CTARn[CSSCK].
2. The delay is programmable in SPIx_CTARn[PASC] and SPIx_CTARn[ASC].

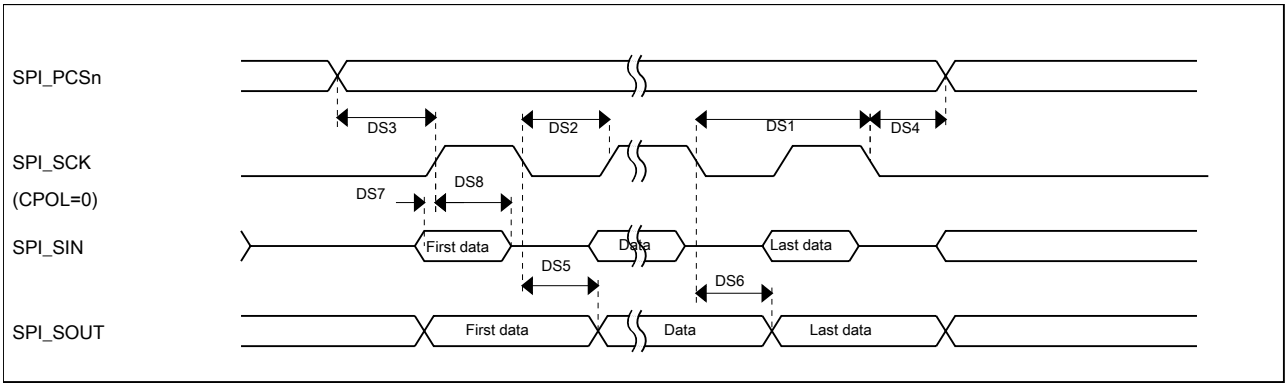

Figure 16. DSPI classic SPI timing — master mode

Table 33. Slave mode DSPI timing for normal pads (limited voltage range)

Num	Description	Min.	Max.	Unit
	Operating voltage	2.7	3.6	V
	Frequency of operation		12.5	MHz
DS9	DSPI_SCK input cycle time	4 x t_{BUS}	—	ns
DS10	DSPI_SCK input high/low time	(t_{SCK}/2) – 2	(t_{SCK}/2) + 2	ns
DS11	DSPI_SCK to DSPI_SOUT valid	—	21	ns
DS12	DSPI_SCK to DSPI_SOUT invalid	0	—	ns
DS13	DSPI_SIN to DSPI_SCK input setup	2	—	ns
DS14	DSPI_SCK to DSPI_SIN input hold	7	—	ns
DS15	$\overline{\text{DSPI_SS}}$ active to DSPI_SOUT driven	—	15	ns
DS16	$\overline{\text{DSPI_SS}}$ inactive to DSPI_SOUT not driven	—	15	ns

Table 34. Slave mode DSPI timing for fast pads (limited voltage range)

Num	Description	Min.	Max.	Unit
	Operating voltage	2.7	3.6	V
	Frequency of operation		25	MHz
DS9	DSPI_SCK input cycle time	4 x t_{BUS}	—	ns
DS10	DSPI_SCK input high/low time	(t_{SCK}/2) – 2	(t_{SCK}/2) + 2	ns
DS11	DSPI_SCK to DSPI_SOUT valid	—	17	ns
DS12	DSPI_SCK to DSPI_SOUT invalid	0	—	ns
DS13	DSPI_SIN to DSPI_SCK input setup	2	—	ns
DS14	DSPI_SCK to DSPI_SIN input hold	7	—	ns
DS15	$\overline{\text{DSPI_SS}}$ active to DSPI_SOUT driven	—	11	ns
DS16	$\overline{\text{DSPI_SS}}$ inactive to DSPI_SOUT not driven	—	11	ns

Table 35. Slave mode DSPI timing for open drain pads (limited voltage range)

Num	Description	Min.	Max.	Unit
	Operating voltage	2.7	3.6	V
	Frequency of operation		12.5	MHz
DS9	DSPI_SCK input cycle time	4 x t_{BUS}	—	ns
DS10	DSPI_SCK input high/low time	(t_{SCK}/2) – 2	(t_{SCK}/2) + 2	ns
DS11	DSPI_SCK to DSPI_SOUT valid	—	28	ns
DS12	DSPI_SCK to DSPI_SOUT invalid	0	—	ns
DS13	DSPI_SIN to DSPI_SCK input setup	2	—	ns
DS14	DSPI_SCK to DSPI_SIN input hold	7	—	ns
DS15	$\overline{\text{DSPI_SS}}$ active to DSPI_SOUT driven	—	22	ns
DS16	$\overline{\text{DSPI_SS}}$ inactive to DSPI_SOUT not driven	—	22	ns

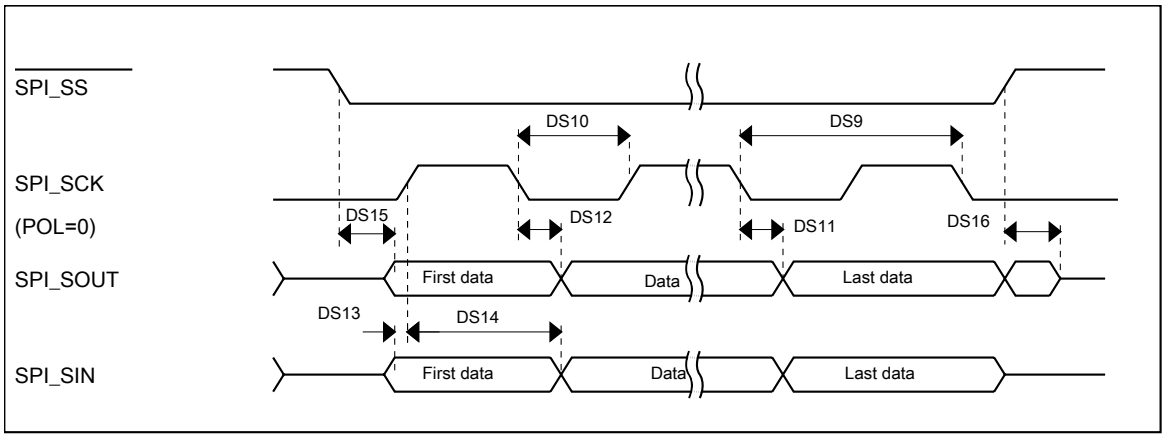

Figure 17. DSPI classic SPI timing — slave mode

3.9.2 SPI (DSPI) switching specifications (full voltage range)

The DMA Serial Peripheral Interface (DSPI) provides a synchronous serial bus with master and slave operations. Many of the transfer attributes are programmable. The tables below provides DSPI timing characteristics for classic SPI timing modes. Refer to the DSPI chapter of the Reference Manual for information on the modified transfer formats used for communicating with slower peripheral devices.

NOTE

Fast pads:
- SIN: PTE19
- SOUT: PTE18
- SCK: PTE17
- PCS: PTE16

Open drain pads:
- SIN: PTC7
- SOUT: PTC6

Table 36. Master mode DSPI timing for normal pads (full voltage range)

Num	Description	Min.	Max.	Unit	Notes
	Operating voltage	1.71	3.6	V	1
	Frequency of operation	—	18.75	MHz	
DS1	DSPI_SCK output cycle time	4 x t_{BUS}	—	ns	
DS2	DSPI_SCK output high/low time	(t_{SCK}/2) - 4	($t_{SCK/2)}$ + 4	ns	
DS3	DSPI_PCS*n* valid to DSPI_SCK delay	(t_{BUS} x 2) – 4	—	ns	2
DS4	DSPI_SCK to DSPI_PCS*n* invalid delay	(t_{BUS} x 2) – 4	—	ns	3
DS5	DSPI_SCK to DSPI_SOUT valid	—	10	ns	
DS6	DSPI_SCK to DSPI_SOUT invalid	-7.8	—	ns	
DS7	DSPI_SIN to DSPI_SCK input setup	24	—	ns	
DS8	DSPI_SCK to DSPI_SIN input hold	0	—	ns	

1. The DSPI module can operate across the entire operating voltage for the processor, but to run across the full voltage range the maximum frequency of operation is reduced.
2. The delay is programmable in SPIx_CTARn[PSSCK] and SPIx_CTARn[CSSCK].
3. The delay is programmable in SPIx_CTARn[PASC] and SPIx_CTARn[ASC].

Table 37. Master mode DSPI timing fast pads (full voltage range)

Num	Description	Min.	Max.	Unit	Notes
	Operating voltage	1.71	3.6	V	1
	Frequency of operation	—	25	MHz	
DS1	DSPI_SCK output cycle time	4 x t_{BUS}	—	ns	
DS2	DSPI_SCK output high/low time	(t_{SCK}/2) - 4	($t_{SCK/2)}$ + 4	ns	
DS3	DSPI_PCS*n* valid to DSPI_SCK delay	(t_{BUS} x 2) – 4	—	ns	2
DS4	DSPI_SCK to DSPI_PCS*n* invalid delay	(t_{BUS} x 2) – 4	—	ns	3
DS5	DSPI_SCK to DSPI_SOUT valid	—	10	ns	
DS6	DSPI_SCK to DSPI_SOUT invalid	-7.8	—	ns	
DS7	DSPI_SIN to DSPI_SCK input setup	17	—	ns	
DS8	DSPI_SCK to DSPI_SIN input hold	0	—	ns	

1. The DSPI module can operate across the entire operating voltage for the processor, but to run across the full voltage range the maximum frequency of operation is reduced.
2. The delay is programmable in SPIx_CTARn[PSSCK] and SPIx_CTARn[CSSCK].
3. The delay is programmable in SPIx_CTARn[PASC] and SPIx_CTARn[ASC].

Table 38. Master mode DSPI timing open drain pads (full voltage range)

Num	Description	Min.	Max.	Unit	Notes
	Operating voltage	1.71	3.6	V	1
	Frequency of operation	—	18.75	MHz	
DS1	DSPI_SCK output cycle time	4 x t_{BUS}	—	ns	
DS2	DSPI_SCK output high/low time	(t_{SCK}/2) - 4	($t_{SCK/2)}$ + 4	ns	
DS3	DSPI_PCS*n* valid to DSPI_SCK delay	(t_{BUS} x 2) – 4	—	ns	2
DS4	DSPI_SCK to DSPI_PCS*n* invalid delay	(t_{BUS} x 2) – 4	—	ns	3
DS5	DSPI_SCK to DSPI_SOUT valid	—	26	ns	
DS6	DSPI_SCK to DSPI_SOUT invalid	-7.8	—	ns	
DS7	DSPI_SIN to DSPI_SCK input setup	24	—	ns	
DS8	DSPI_SCK to DSPI_SIN input hold	0	—	ns	

1. The DSPI module can operate across the entire operating voltage for the processor, but to run across the full voltage range the maximum frequency of operation is reduced.
2. The delay is programmable in SPIx_CTARn[PSSCK] and SPIx_CTARn[CSSCK].
3. The delay is programmable in SPIx_CTARn[PASC] and SPIx_CTARn[ASC].

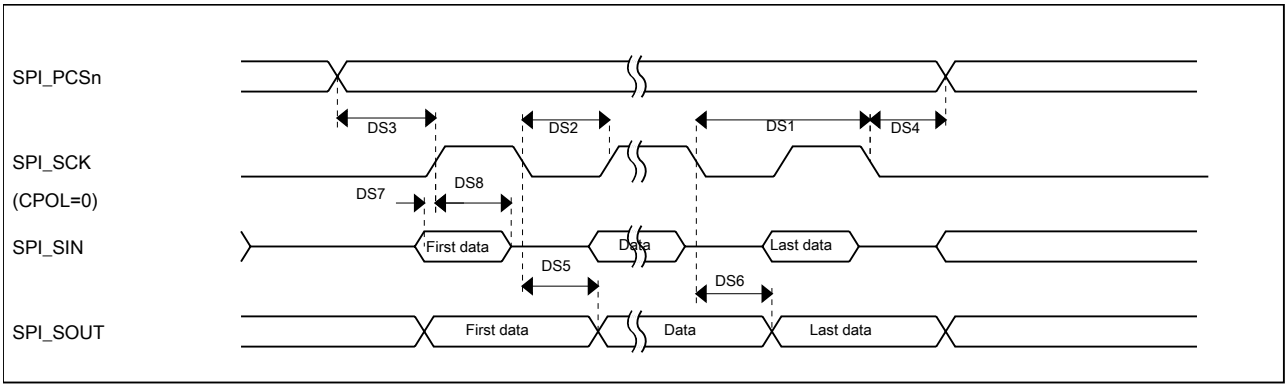

Figure 18. DSPI classic SPI timing — master mode

Table 39. Slave mode DSPI timing for normal pads (full voltage range)

Num	Description	Min.	Max.	Unit
	Operating voltage	1.71	3.6	V
	Frequency of operation	—	12.5	MHz
DS9	DSPI_SCK input cycle time	8 x t_{BUS}	—	ns
DS10	DSPI_SCK input high/low time	(t_{SCK}/2) - 4	($t_{SCK/2)}$ + 4	ns
DS11	DSPI_SCK to DSPI_SOUT valid	—	27.5	ns
DS12	DSPI_SCK to DSPI_SOUT invalid	0	—	ns
DS13	DSPI_SIN to DSPI_SCK input setup	2.5	—	ns
DS14	DSPI_SCK to DSPI_SIN input hold	7	—	ns
DS15	$\overline{\text{DSPI_SS}}$ active to DSPI_SOUT driven	—	22	ns
DS16	$\overline{\text{DSPI_SS}}$ inactive to DSPI_SOUT not driven	—	22	ns

Table 40. Slave mode DSPI timing for fast pads (full voltage range)

Num	Description	Min.	Max.	Unit
	Operating voltage	1.71	3.6	V
	Frequency of operation	—	18.75	MHz
DS9	DSPI_SCK input cycle time	8 x t_{BUS}	—	ns
DS10	DSPI_SCK input high/low time	(t_{SCK}/2) - 4	($t_{SCK/2)}$ + 4	ns
DS11	DSPI_SCK to DSPI_SOUT valid	—	20.5	ns
DS12	DSPI_SCK to DSPI_SOUT invalid	0	—	ns
DS13	DSPI_SIN to DSPI_SCK input setup	2.5	—	ns
DS14	DSPI_SCK to DSPI_SIN input hold	7	—	ns
DS15	$\overline{\text{DSPI_SS}}$ active to DSPI_SOUT driven	—	15	ns
DS16	$\overline{\text{DSPI_SS}}$ inactive to DSPI_SOUT not driven	—	15	ns

Table 41. Slave mode DSPI timing for open drain pads (full voltage range)

Num	Description	Min.	Max.	Unit
	Operating voltage	1.71	3.6	V
	Frequency of operation	—	9.375	MHz
DS9	DSPI_SCK input cycle time	8 x t_{BUS}	—	ns
DS10	DSPI_SCK input high/low time	(t_{SCK}/2) - 4	($t_{SCK/2)}$ + 4	ns
DS11	DSPI_SCK to DSPI_SOUT valid	—	43.5	ns
DS12	DSPI_SCK to DSPI_SOUT invalid	0	—	ns
DS13	DSPI_SIN to DSPI_SCK input setup	2.5	—	ns
DS14	DSPI_SCK to DSPI_SIN input hold	7	—	ns
DS15	$\overline{\text{DSPI_SS}}$ active to DSPI_SOUT driven	—	38	ns
DS16	$\overline{\text{DSPI_SS}}$ inactive to DSPI_SOUT not driven	—	38	ns

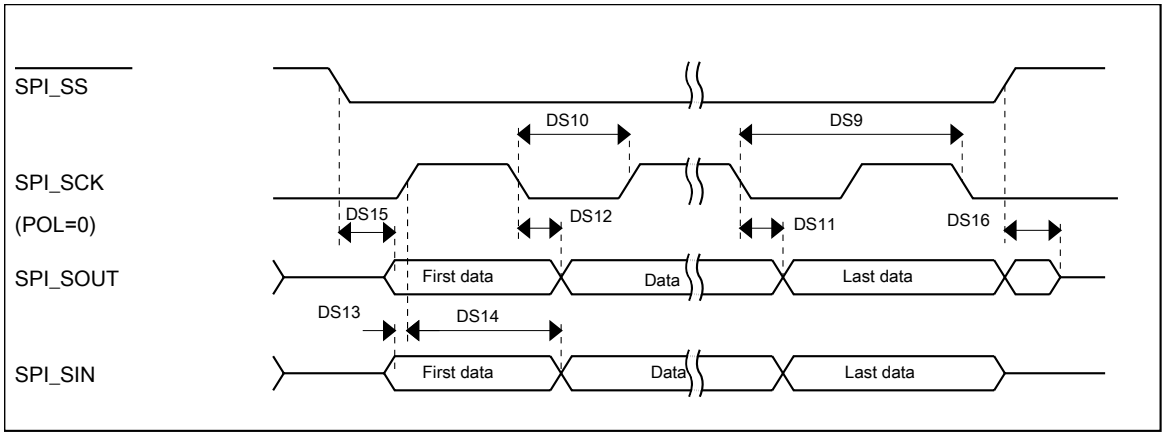

Figure 19. DSPI classic SPI timing — slave mode

3.9.3 I^2C

See General switching specifications.

3.9.4 UART

See General switching specifications.

4 Dimensions

4.1 Obtaining package dimensions

Package dimensions are provided in package drawings.

To find a package drawing, go to www.nxp.com and perform a keyword search for the drawing's document number:

If you want the drawing for this package	Then use this document number
48-pin LQFP	98ASH00962A
64-pin LQFP	98ASS23234W
100-pin LQFP	98ASS23308W

5 Pinout

5.1 KV4x Signal Multiplexing and Pin Assignments

The following table shows the signals available on each pin and the locations of these pins on the devices supported by this document. The Port Control Module is responsible for selecting which ALT functionality is available on each pin.

100 LQFP	64 LQFP	48 LQFP	Pin Name	Default	ALT0	ALT1	ALT2	ALT3	ALT4	ALT5	ALT6	ALT7
1	1	—	PTE0	ADCB_CH6f	ADCB_CH6f	PTE0		UART1_TX	XBAR0_ OUT10	XBAR0_IN11		
2	2	—	PTE1/ LLWU_P0	ADCB_CH7f	ADCB_CH7f	PTE1/ LLWU_P0		UART1_RX	XBAR0_ OUT11	XBAR0_IN7		
3	—	—	PTE2/ LLWU_P1	ADCB_CH6g	ADCB_CH6g	PTE2/ LLWU_P1		UART1_ CTS_b				
4	—	—	PTE3	ADCB_CH7g	ADCB_CH7g	PTE3		UART1_ RTS_b				
5	—	—	PTE4/ LLWU_P2	DISABLED		PTE4/ LLWU_P2						
6	—	—	PTE5	DISABLED		PTE5					FTM3_CH0	
7	—	—	PTE6/ LLWU_P16	DISABLED		PTE6/ LLWU_P16					FTM3_CH1	
8	3	1	VDD	VDD	VDD							
9	4	2	VSS	VSS	VSS							
10	5	3	PTE16	ADCA_CH0	ADCA_CH0	PTE16	SPI0_PCS0	UART1_TX	FTM_CLKIN0		FTM0_FLT3	

100 LQFP	64 LQFP	48 LQFP	Pin Name	Default	ALT0	ALT1	ALT2	ALT3	ALT4	ALT5	ALT6	ALT7
11	6	4	PTE17/ LLWU_P19	ADCA_CH1	ADCA_CH1	PTE17/ LLWU_P19	SPI0_SCK	UART1_RX	FTM_CLKIN1		LPTMR0_ ALT3	
12	7	5	PTE18/ LLWU_P20	ADCB_CH0	ADCB_CH0	PTE18/ LLWU_P20	SPI0_SOUT	UART1_ CTS_b	I2C0_SDA			
13	8	6	PTE19	ADCB_CH1	ADCB_CH1	PTE19	SPI0_SIN	UART1_ RTS_b	I2C0_SCL		CMP3_OUT	
14	—	—	ADCA_CH6a	ADCA_CH6a	ADCA_CH6a							
15	—	—	ADCA_CH7a	ADCA_CH7a	ADCA_CH7a							
16	—	7	PTE20	ADCA_CH6b	ADCA_CH6b	PTE20		FTM1_CH0	UART0_TX			
17	—	8	PTE21	ADCA_CH7b	ADCA_CH7b	PTE21		FTM1_CH1	UART0_RX			
18	9	—	ADCA_CH2	ADCA_CH2	ADCA_CH2							
19	10	—	ADCA_CH3	ADCA_CH3	ADCA_CH3							
20	11	—	ADCA_CH6c	ADCA_CH6c	ADCA_CH6c							
21	12	—	ADCA_CH7c	ADCA_CH7c	ADCA_CH7c							
22	13	9	VDDA	VDDA	VDDA							
23	14	10	VREFH	VREFH	VREFH							
24	15	11	VREFL	VREFL	VREFL							
25	16	12	VSSA	VSSA	VSSA							
26	17	13	PTE29	ADCA_CH4/ CMP1_IN5/ CMP0_IN5	ADCA_CH4/ CMP1_IN5/ CMP0_IN5	PTE29		FTM0_CH2		FTM_CLKIN0		
27	18	14	PTE30	DAC0_OUT/ CMP1_IN3/ ADCA_CH5	DAC0_OUT/ CMP1_IN3/ ADCA_CH5	PTE30		FTM0_CH3		FTM_CLKIN1		
28	19	—	ADCA_CH6d/ CMP0_IN4/ CMP2_IN3	ADCA_CH6d/ CMP0_IN4/ CMP2_IN3	ADCA_CH6d/ CMP0_IN4/ CMP2_IN3							
29	—	—	VSS	VSS	VSS							
30	—	—	VDD	VDD	VDD							
31	20	15	PTE24	ADCB_CH4	ADCB_CH4	PTE24	CAN1_TX	FTM0_CH0	XBAR0_IN2	I2C0_SCL	EWM_OUT_b	XBAR0_ OUT4
32	21	16	PTE25/ LLWU_P21	ADCB_CH5	ADCB_CH5	PTE25/ LLWU_P21	CAN1_RX	FTM0_CH1	XBAR0_IN3	I2C0_SDA	EWM_IN	XBAR0_ OUT5
33	—	—	PTE26	DISABLED		PTE26						
34	22	17	PTA0	JTAG_TCLK/ SWD_CLK		PTA0	UART0_ CTS_b/ UART0_ COL_b	FTM0_CH5	XBAR0_IN4	EWM_IN		JTAG_TCLK/ SWD_CLK
35	23	18	PTA1	JTAG_TDI		PTA1	UART0_RX	FTM0_CH6	CMP0_OUT		FTM1_CH1	JTAG_TDI
36	24	19	PTA2	JTAG_TDO/ TRACE_ SWO		PTA2	UART0_TX	FTM0_CH7	CMP1_OUT		FTM1_CH0	JTAG_TDO/ TRACE_ SWO
37	25	20	PTA3	JTAG_TMS/ SWD_DIO		PTA3	UART0_ RTS_b	FTM0_CH0	XBAR0_IN9	EWM_OUT_b	FLEXPWMA_ A0	JTAG_TMS/ SWD_DIO

100 LQFP	64 LQFP	48 LQFP	Pin Name	Default	ALT0	ALT1	ALT2	ALT3	ALT4	ALT5	ALT6	ALT7
38	26	21	PTA4/ LLWU_P3	NMI_b		PTA4/ LLWU_P3		FTM0_CH1	XBAR0_IN10	FTM0_FLT3	FLEXPWMA_ B0	NMI_b
39	27	—	PTA5	DISABLED		PTA5		FTM0_CH2		CMP2_OUT		JTAG_TRST_ b
40	—	22	VDD	VDD	VDD							
41	—	23	VSS	VSS	VSS							
42	28	—	PTA12	CMP2_IN0	CMP2_IN0	PTA12	CAN0_TX	FTM1_CH0				FTM1_QD_ PHA
43	29	—	PTA13/ LLWU_P4	CMP2_IN1	CMP2_IN1	PTA13/ LLWU_P4	CAN0_RX	FTM1_CH1				FTM1_QD_ PHB
44	—	—	PTA14	CMP3_IN0	CMP3_IN0	PTA14	SPI0_PCS0	UART0_TX				
45	—	—	PTA15	CMP3_IN1	CMP3_IN1	PTA15	SPI0_SCK	UART0_RX				
46	—	—	PTA16	CMP3_IN2	CMP3_IN2	PTA16	SPI0_SOUT	UART0_ CTS_b/ UART0_ COL_b				
47	—	—	PTA17	ADCA_CH7e	ADCA_CH7e	PTA17	SPI0_SIN	UART0_ RTS_b				
48	30	—	VDD	VDD	VDD							
49	31	—	VSS	VSS	VSS							
50	32	24	PTA18	EXTAL0	EXTAL0	PTA18	XBAR0_IN7	FTM0_FLT2	FTM_CLKIN0	XBAR0_ OUT8	FTM3_CH2	
51	33	25	PTA19	XTAL0	XTAL0	PTA19	XBAR0_IN8	FTM1_FLT0	FTM_CLKIN1	XBAR0_ OUT9	LPTMR0_ ALT1	
52	34	26	RESET_b	RESET_b	RESET_b							
53	35	27	PTB0/ LLWU_P5	ADCB_CH2	ADCB_CH2	PTB0/ LLWU_P5	I2C0_SCL	FTM1_CH0			FTM1_QD_ PHA	UART0_RX
54	36	28	PTB1	ADCB_CH3	ADCB_CH3	PTB1	I2C0_SDA	FTM1_CH1	FTM0_FLT2	EWM_IN	FTM1_QD_ PHB	UART0_TX
55	37	29	PTB2	ADCA_CH6e/ CMP2_IN2	ADCA_CH6e/ CMP2_IN2	PTB2	I2C0_SCL	UART0_ RTS_b	FTM0_FLT1		FTM0_FLT3	
56	38	30	PTB3	ADCB_CH7e/ CMP3_IN5	ADCB_CH7e/ CMP3_IN5	PTB3	I2C0_SDA	UART0_ CTS_b/ UART0_ COL_b			FTM0_FLT0	
57	—	—	PTB9	DISABLED		PTB9						
58	—	—	PTB10	ADCB_CH6a	ADCB_CH6a	PTB10					FTM0_FLT1	
59	—	—	PTB11	ADCB_CH7a	ADCB_CH7a	PTB11					FTM0_FLT2	
60	—	—	VSS	VSS	VSS							
61	—	—	VDD	VDD	VDD							
62	39	31	PTB16	DISABLED		PTB16		UART0_RX	FTM_CLKIN2	CAN0_TX	EWM_IN	XBAR0_IN5
63	40	32	PTB17	DISABLED		PTB17		UART0_TX	FTM_CLKIN1	CAN0_RX	EWM_OUT_b	
64	41	—	PTB18	DISABLED		PTB18	CAN0_TX		FTM3_CH2			
65	42	—	PTB19	DISABLED		PTB19	CAN0_RX		FTM3_CH3			

100 LQFP	64 LQFP	48 LQFP	Pin Name	Default	ALT0	ALT1	ALT2	ALT3	ALT4	ALT5	ALT6	ALT7
66	—	—	PTB20	DISABLED		PTB20				FLEXPWMA_X0	CMP0_OUT	
67	—	—	PTB21	DISABLED		PTB21				FLEXPWMA_X1	CMP1_OUT	
68	—	—	PTB22	DISABLED		PTB22				FLEXPWMA_X2	CMP2_OUT	
69	—	—	PTB23	DISABLED		PTB23		SPI0_PCS5		FLEXPWMA_X3	CMP3_OUT	
70	43	33	PTC0	ADCB_CH6b	ADCB_CH6b	PTC0	SPI0_PCS4	PDB0_EXTRG			FTM0_FLT1	SPI0_PCS0
71	44	34	PTC1/LLWU_P6	ADCB_CH7b	ADCB_CH7b	PTC1/LLWU_P6	SPI0_PCS3	UART1_RTS_b	FTM0_CH0	FLEXPWMA_A3	XBAR0_IN11	
72	45	35	PTC2	ADCB_CH6c/CMP1_IN0	ADCB_CH6c/CMP1_IN0	PTC2	SPI0_PCS2	UART1_CTS_b	FTM0_CH1	FLEXPWMA_B3	XBAR0_IN6	
73	46	36	PTC3/LLWU_P7	CMP1_IN1	CMP1_IN1	PTC3/LLWU_P7	SPI0_PCS1	UART1_RX	FTM0_CH2	CLKOUT	FTM3_FLT0	
74	47	—	VSS	VSS	VSS							
75	48	—	VDD	VDD	VDD							
76	49	37	PTC4/LLWU_P8	DISABLED		PTC4/LLWU_P8	SPI0_PCS0	UART1_TX	FTM0_CH3		CMP1_OUT	
77	50	38	PTC5/LLWU_P9	DISABLED		PTC5/LLWU_P9	SPI0_SCK	LPTMR0_ALT2	XBAR0_IN2		CMP0_OUT	FTM0_CH2
78	51	39	PTC6/LLWU_P10	CMP2_IN4/CMP0_IN0	CMP2_IN4/CMP0_IN0	PTC6/LLWU_P10	SPI0_SOUT	PDB0_EXTRG	XBAR0_IN3	UART0_RX	XBAR0_OUT6	I2C0_SCL
79	52	40	PTC7	CMP3_IN4/CMP0_IN1	CMP3_IN4/CMP0_IN1	PTC7	SPI0_SIN		XBAR0_IN4	UART0_TX	XBAR0_OUT7	I2C0_SDA
80	53	—	PTC8	ADCB_CH7c/CMP0_IN2	ADCB_CH7c/CMP0_IN2	PTC8		FTM3_CH4				
81	54	—	PTC9	ADCB_CH6d/CMP0_IN3	ADCB_CH6d/CMP0_IN3	PTC9		FTM3_CH5				
82	55	—	PTC10	ADCB_CH7d	ADCB_CH7d	PTC10		FTM3_CH6				
83	56	—	PTC11/LLWU_P11	ADCB_CH6e	ADCB_CH6e	PTC11/LLWU_P11		FTM3_CH7				
84	—	—	PTC12	DISABLED		PTC12			FTM_CLKIN0		FTM3_FLT0	
85	—	—	PTC13	DISABLED		PTC13			FTM_CLKIN1			
86	—	—	PTC14	DISABLED		PTC14		I2C0_SCL				
87	—	—	PTC15	DISABLED		PTC15		I2C0_SDA				
88	—	—	VSS	VSS	VSS							
89	—	—	VDD	VDD	VDD							
90	—	—	PTC16	DISABLED		PTC16	CAN1_RX					
91	—	—	PTC17	DISABLED		PTC17	CAN1_TX					
92	—	—	PTC18	DISABLED		PTC18						
93	57	41	PTD0/LLWU_P12	DISABLED		PTD0/LLWU_P12	SPI0_PCS0		FTM3_CH0	FTM0_CH0	FLEXPWMA_A0	

100 LQFP	64 LQFP	48 LQFP	Pin Name	Default	ALT0	ALT1	ALT2	ALT3	ALT4	ALT5	ALT6	ALT7
94	58	42	PTD1	ADCA_CH7f	ADCA_CH7f	PTD1	SPI0_SCK		FTM3_CH1	FTM0_CH1	FLEXPWMA_B0	
95	59	43	PTD2/ LLWU_P13	DISABLED		PTD2/ LLWU_P13	SPI0_SOUT		FTM3_CH2	FTM0_CH2	FLEXPWMA_A1	I2C0_SCL
96	60	44	PTD3	DISABLED		PTD3	SPI0_SIN		FTM3_CH3	FTM0_CH3	FLEXPWMA_B1	I2C0_SDA
97	61	45	PTD4/ LLWU_P14	DISABLED		PTD4/ LLWU_P14	SPI0_PCS1	UART0_RTS_b	FTM0_CH4	FLEXPWMA_A2	EWM_IN	SPI0_PCS0
98	62	46	PTD5	ADCA_CH6g	ADCA_CH6g	PTD5	SPI0_PCS2	UART0_CTS_b/ UART0_COL_b	FTM0_CH5	FLEXPWMA_B2	EWM_OUT_b	SPI0_SCK
99	63	47	PTD6/ LLWU_P15	ADCA_CH7g	ADCA_CH7g	PTD6/ LLWU_P15	SPI0_PCS3	UART0_RX	FTM0_CH6	FTM1_CH0	FTM0_FLT0	SPI0_SOUT
100	64	48	PTD7	DISABLED		PTD7		UART0_TX	FTM0_CH7	FTM1_CH1	FTM0_FLT1	SPI0_SIN

5.2 Pinout diagrams

The following diagrams show pinouts for the packages. For each pin, the diagrams show the default function. However, many signals may be multiplexed onto a single pin.

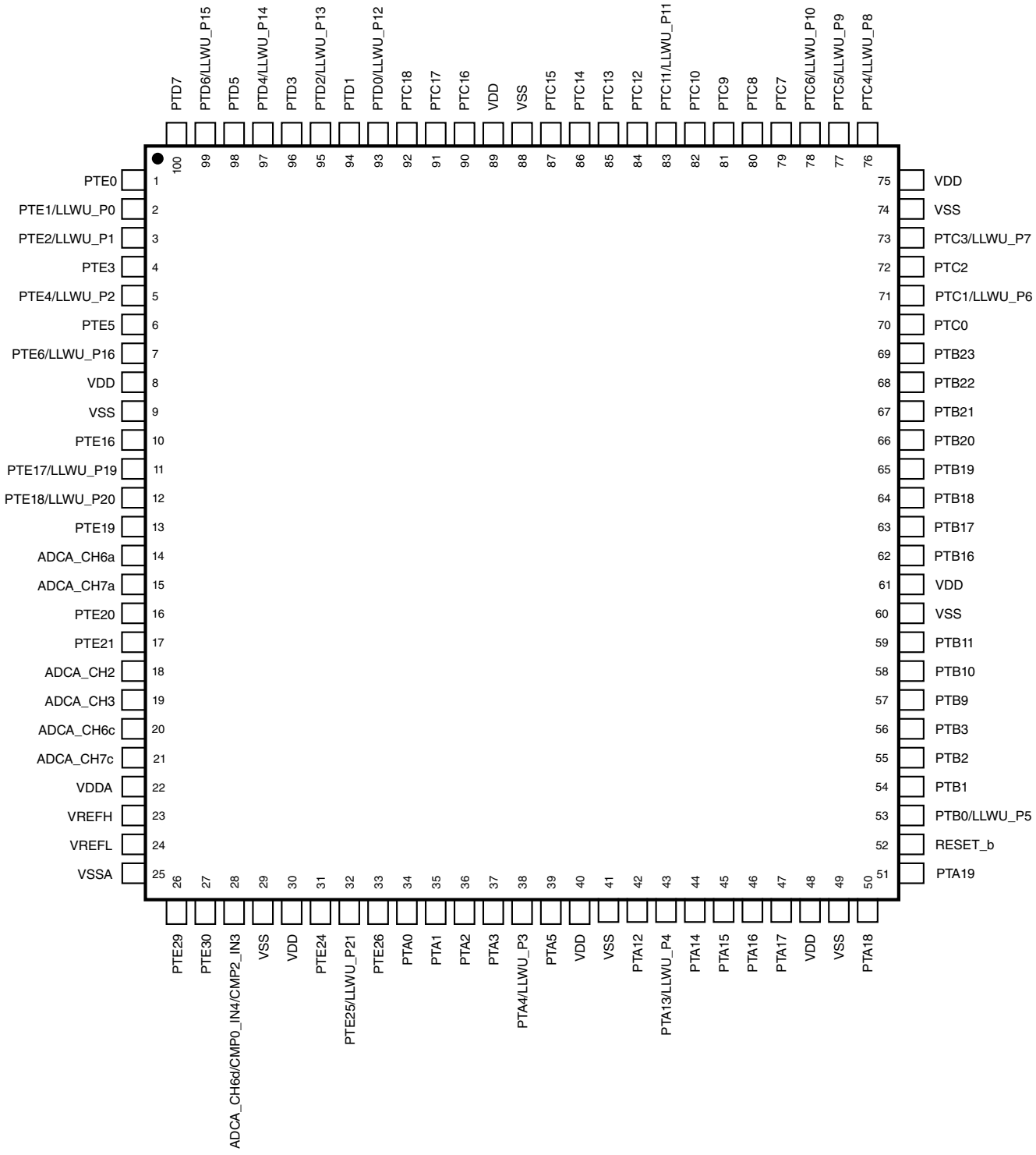

Figure 20. 100-pin LQFP

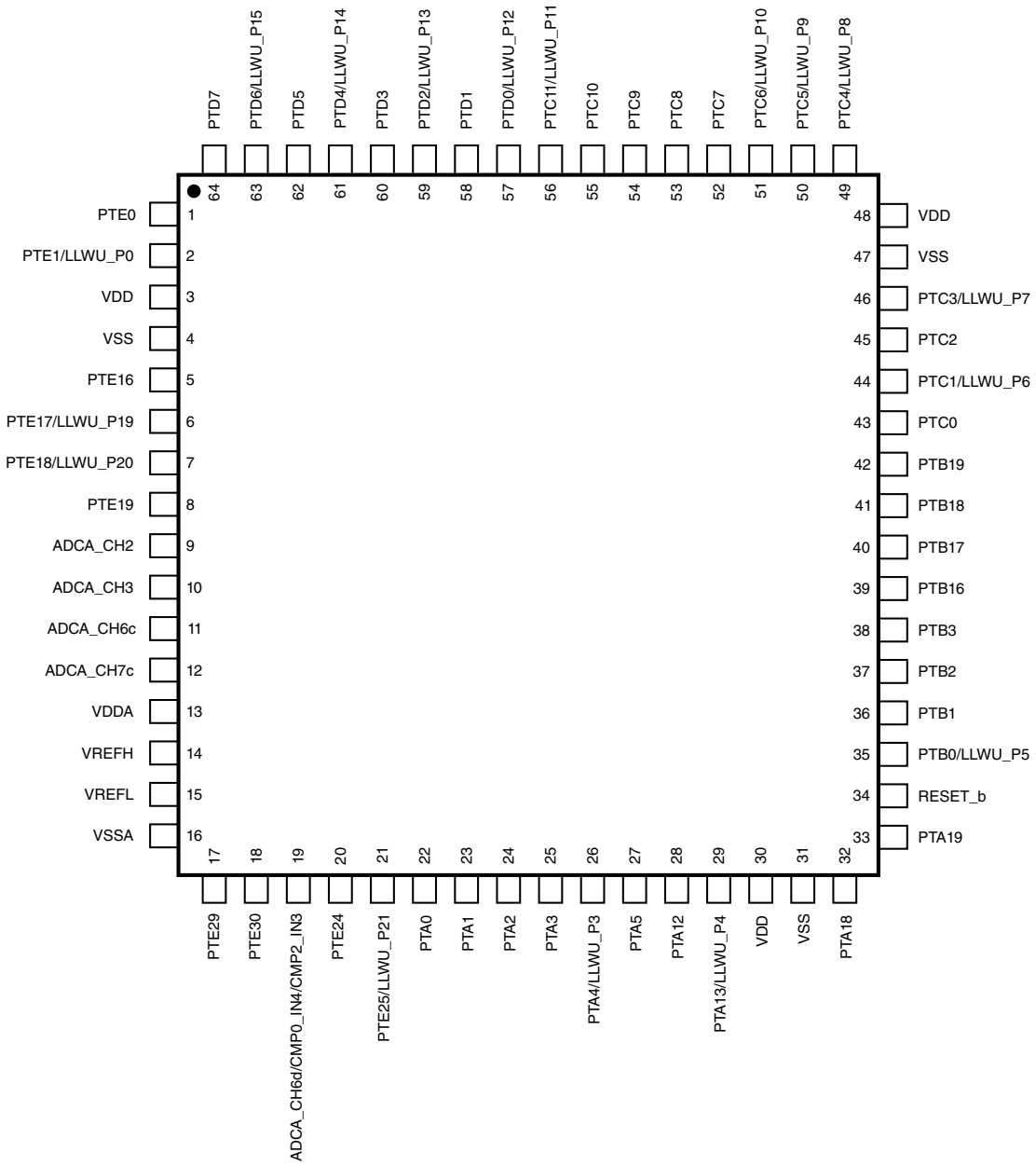

Figure 21. 64-pin LQFP

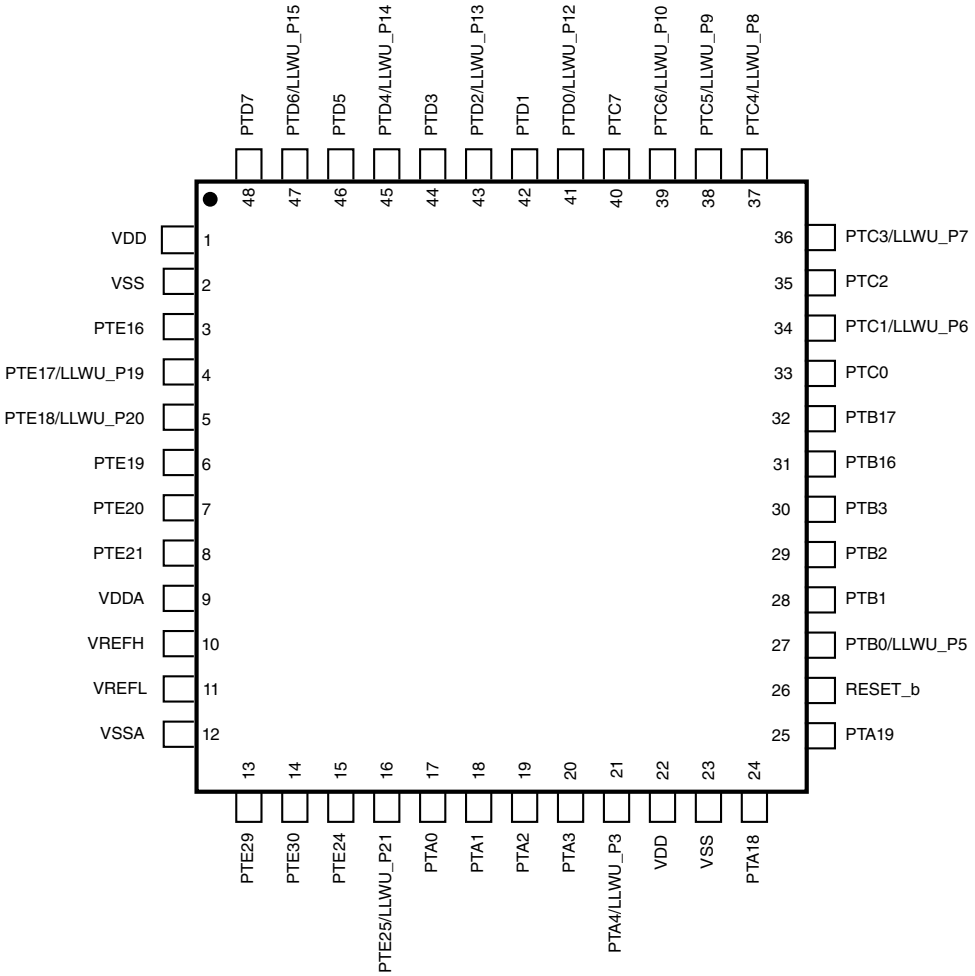

Figure 22. 48-pin LQFP

6 Ordering parts

6.1 Determining valid orderable parts

Valid orderable part numbers are provided on the web. To determine the orderable part numbers for this device, go to www.nxp.com and perform a part number search for the MKV4x device numbers.

7 Part identification

7.1 Description

Part numbers for the chip have fields that identify the specific part. You can use the values of these fields to determine the specific part you have received.

7.2 Format

Part numbers for this device have the following format:

Q KV## A FFF T PP CC S N

7.3 Fields

This table lists the possible values for each field in the part number (not all combinations are valid):

Field	Description	Values
Q	Qualification status	• M = Fully qualified, general market flow • P = Prequalification
KV##	Kinetis family	• KV42 • KV44 • KV46
A	Key attribute	• F = Cortex-M4 w/ DSP and FPU
FFF	Program flash memory size	• 64 = 64 KB • 128 = 128 KB • 256 = 256 KB
T	Temperature range (°C)	• V = –40 to 105
PP	Package identifier	• LF = 48 LQFP (7 mm x 7 mm) • LH = 64 LQFP (10 mm x 10 mm) • LL = 100 LQFP (14 mm x 14 mm)
CC	Maximum CPU frequency (MHz)	• 16 = 168 MHz

Table continues on the next page...

Field	Description	Values
S	Software type	• (Blank) = Not software enabled
N	Packaging type	• R = Tape and reel • (Blank) = Trays

7.4 Example

This is an example part number:

MKV46F256VLL16

8 Terminology and guidelines

8.1 Definition: Operating requirement

An *operating requirement* is a specified value or range of values for a technical characteristic that you must guarantee during operation to avoid incorrect operation and possibly decreasing the useful life of the chip.

8.1.1 Example

This is an example of an operating requirement:

Symbol	Description	Min.	Max.	Unit
V_{DD}	1.0 V core supply voltage	0.9	1.1	V

8.2 Definition: Operating behavior

Unless otherwise specified, an *operating behavior* is a specified value or range of values for a technical characteristic that are guaranteed during operation if you meet the operating requirements and any other specified conditions.

8.2.1 Example

This is an example of an operating behavior:

Symbol	Description	Min.	Max.	Unit
I_{WP}	Digital I/O weak pullup/ pulldown current	10	130	µA

8.3 Definition: Attribute

An *attribute* is a specified value or range of values for a technical characteristic that are guaranteed, regardless of whether you meet the operating requirements.

8.3.1 Example

This is an example of an attribute:

Symbol	Description	Min.	Max.	Unit
CIN_D	Input capacitance: digital pins	—	7	pF

8.4 Definition: Rating

A *rating* is a minimum or maximum value of a technical characteristic that, if exceeded, may cause permanent chip failure:

- *Operating ratings* apply during operation of the chip.
- *Handling ratings* apply when the chip is not powered.

8.4.1 Example

This is an example of an operating rating:

Symbol	Description	Min.	Max.	Unit
V_{DD}	1.0 V core supply voltage	–0.3	1.2	V

8.5 Result of exceeding a rating

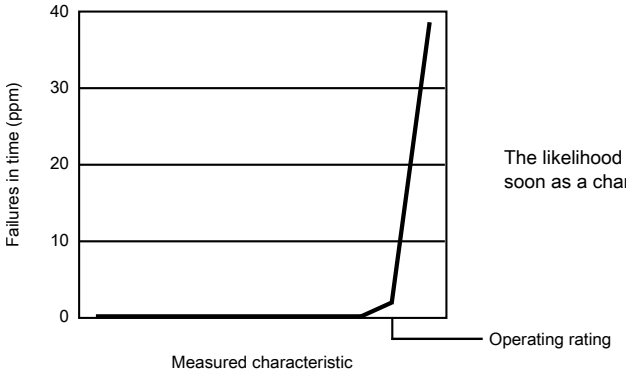

The likelihood of permanent chip failure increases rapidly as soon as a characteristic begins to exceed one of its operating ratings.

8.6 Relationship between ratings and operating requirements

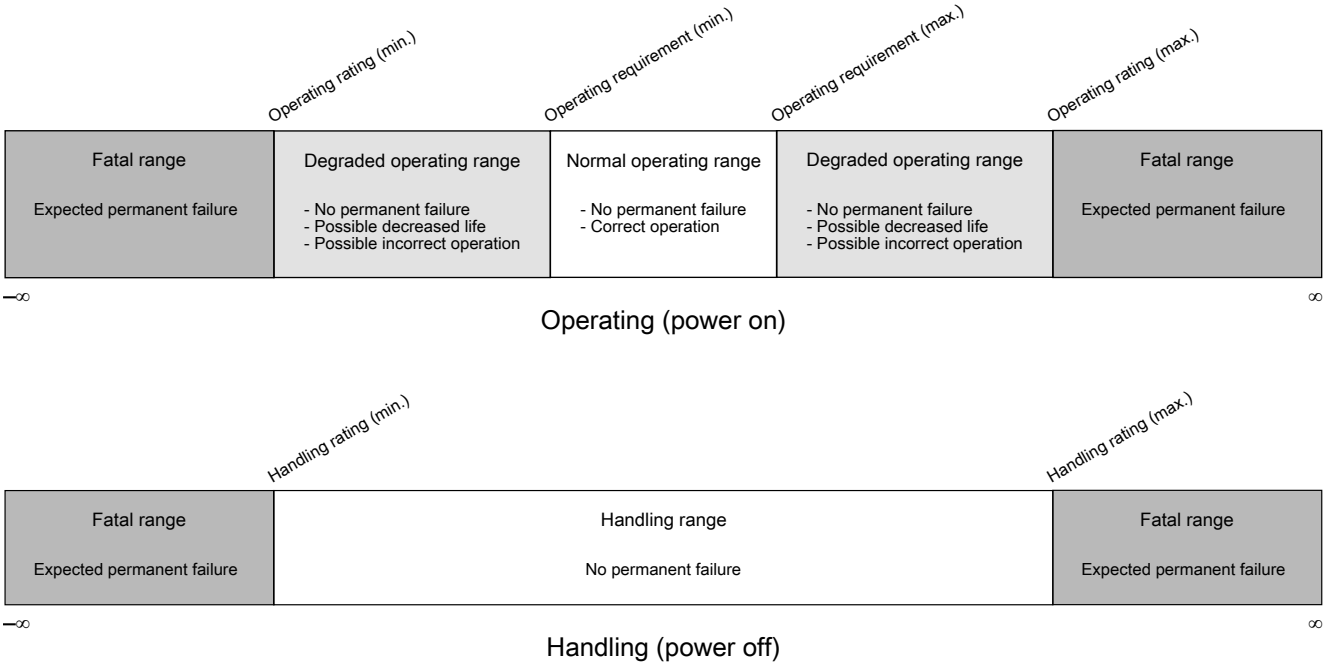

8.7 Guidelines for ratings and operating requirements

Follow these guidelines for ratings and operating requirements:

- Never exceed any of the chip's ratings.

- During normal operation, don't exceed any of the chip's operating requirements.
- If you must exceed an operating requirement at times other than during normal operation (for example, during power sequencing), limit the duration as much as possible.

8.8 Definition: Typical value

A *typical value* is a specified value for a technical characteristic that:

- Lies within the range of values specified by the operating behavior
- Given the typical manufacturing process, is representative of that characteristic during operation when you meet the typical-value conditions or other specified conditions

Typical values are provided as design guidelines and are neither tested nor guaranteed.

8.8.1 Example 1

This is an example of an operating behavior that includes a typical value:

Symbol	Description	Min.	Typ.	Max.	Unit
I_{WP}	Digital I/O weak pullup/pulldown current	10	70	130	µA

8.8.2 Example 2

This is an example of a chart that shows typical values for various voltage and temperature conditions:

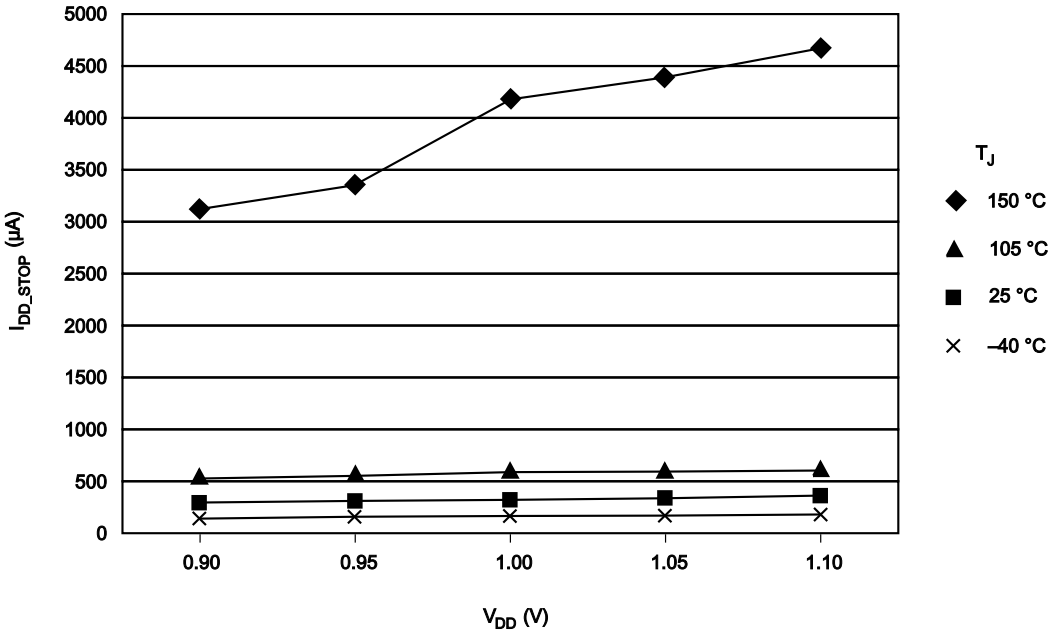

8.9 Typical Value Conditions

Typical values assume you meet the following conditions (or other conditions as specified):

Symbol	Description	Value	Unit
T_A	Ambient temperature	25	°C
V_{DD}	3.3 V supply voltage	3.3	V

9 Revision history

The following table provides a revision history for this document.

Table 42. Revision history

Rev. No.	Date	Substantial Changes
0	7/2014	Initial NDA release.

1	2/2015	• Added information about 48 LQFP package in the following sections:
		  • Ordering information
		  • Fields

Table continues on the next page...

Table 42. Revision history (continued)

Rev. No.	Date	Substantial Changes
		• Obtaining package dimensions • Pinout • In table "Power consumption operating behaviors", removed the text "Maximum core fequency of 150 Mhz" from note for I_{DDA}. • In table "Typical device clock specifications", removed information about High Speed run mode.

2	8/2015	• Updated instances of operating frequency from 150 MHz to 168 Mhz
		• Changed document number from "KV4XP100M150" to "KV4XP100M168" due to the change in operating frequency
		• Part numbers ending with "15" changed to ending with "16"
		• Removed instances of MKV45, MKV43, and MKV40 part numbers
		• Updated MKV41 part numbers to MKV42
		• Added part numbers MKV44F256VLL16 and MKV44F256VLH16
		• Updated table "Orderable part numbers summary"
		• In table Recommended Operating Conditions :
		  • Updated minimum digital supply voltage to 1.71 V
		  • Added footnote numbers 2 and 3
		  • Removed rows for I_{OH}, I_{OL}, N_F, T_R, and t_{FLRET}
		• Updated table Voltage and current operating behaviors
		• Updated table Power mode transition operating behaviors
		• Updated table Power consumption operating behaviors
		• Updated table EMC radiated emissions operating behaviors
		• Updated table Typical device clock specifications
		• Updated table Thermal attributes
		• Updated the PLL section of table MCG specifications
		• Updated t_{ersall} value in table Flash timing specifications — commands
		• Added note to section 12-bit cyclic Analog-to-Digital Converter (ADC) parameters
		• Updated $I_{DDA_DACL\ P}$ and $I_{DDA_DACH\ P}$ values in table 12-bit DAC operating behaviors
		• Updated the pinouts
		• Added section Enhanced NanoEdge PWM characteristics

3	06/2016	• Changed occurences of Freescale to NXP • In the features list, added a section for "Kinetis Motor Suite" • Added KMS orderable part numbers • Added section Kinetis Motor Suite (KMS) • In table 12-bit ADC electrical specifications, changed typical value of ENOB from 9.5 to 9.1
4	09/2019	• In Introduction, added this table table • Updated ARM to Arm as per branding guidelines • Removed Package Your Way Note for 48 LQFP package all over the document • Removed KMS content all over document • Removed Debug trace timing specifications • Added V_{HYS} in Recommended Operating Conditions table • Added Δf_{ints_t} and Δf_{intf_ft} in MCG specifications table • Updated minimum value of J1 parameter in SWD full voltage range electricals and JTAG limited voltage range electricals

Table 42. Revision history

Rev. No.	Date	Substantial Changes
		• Updated the values of GAIN error parameter in 12-bit ADC electrical specifications • ADded maximum values of I_{ADRUN} in 12-bit ADC electrical specifications • ADded the maximum values and footnotes to IDDs in Power Consumption operating behaviors table • Updated the footnote from V_{REFH} to V_{REF_OUT} in 12-bit DAC operating requirements

How to Reach Us:

Home Page:
nxp.com

Web Support:
nxp.com/support

Information in this document is provided solely to enable system and software implementers to use NXP products. There are no express or implied copyright licenses granted hereunder to design or fabricate any integrated circuits based on the information in this document. NXP reserves the right to make changes without further notice to any products herein.

NXP makes no warranty, representation, or guarantee regarding the suitability of its products for any particular purpose, nor does NXP assume any liability arising out of the application or use of any product or circuit, and specifically disclaims any and all liability, including without limitation consequential or incidental damages. "Typical" parameters that may be provided in NXP data sheets and/or specifications can and do vary in different applications, and actual performance may vary over time. All operating parameters, including "typicals," must be validated for each customer application by customer's technical experts. NXP does not convey any license under its patent rights nor the rights of others. NXP sells products pursuant to standard terms and conditions of sale, which can be found at the following address: nxp.com/SalesTermsandConditions.

While NXP has implemented advanced security features, all products may be subject to unidentified vulnerabilities. Customers are responsible for the design and operation of their applications and products to reduce the effect of these vulnerabilities on customer's applications and products, and NXP accepts no liability for any vulnerability that is discovered. Customers should implement appropriate design and operating safeguards to minimize the risks associated with their applications and products.

NXP, the NXP logo, NXP SECURE CONNECTIONS FOR A SMARTER WORLD, COOLFLUX, EMBRACE, GREENCHIP, HITAG, I2C BUS, ICODE, JCOP, LIFE VIBES, MIFARE, MIFARE CLASSIC, MIFARE DESFire, MIFARE PLUS, MIFARE FLEX, MANTIS, MIFARE ULTRALIGHT, MIFARE4MOBILE, MIGLO, NTAG, ROADLINK, SMARTLX, SMARTMX, STARPLUG, TOPFET, TRENCHMOS, UCODE, Freescale, the Freescale logo, AltiVec, C-5, CodeTEST, CodeWarrior, ColdFire, ColdFire+, C-Ware, the Energy Efficient Solutions logo, Kinetis, Layerscape, MagniV, mobileGT, PEG, PowerQUICC, Processor Expert, QorIQ, QorIQ Qonverge, Ready Play, SafeAssure, the SafeAssure logo, StarCore, Symphony, VortiQa, Vybrid, Airfast, BeeKit, BeeStack, CoreNet, Flexis, MXC, Platform in a Package, QUICC Engine, SMARTMOS, Tower, TurboLink, UMEMS, eIQ, Immersiv3D, EdgeLock, and EdgeScale are trademarks of NXP B.V. All other product or service names are the property of their respective owners. AMBA, Arm, Arm7, Arm7TDMI, Arm9, Arm11, Artisan, big.LITTLE, Cordio, CoreLink, CoreSight, Cortex, DesignStart, DynamIQ, Jazelle, Keil, Mali, Mbed, Mbed Enabled, NEON, POP, RealView, SecurCore, Socrates, Thumb, TrustZone, ULINK, ULINK2, ULINK-ME, ULINK-PLUS, ULINKpro, µVision, Versatile are trademarks or registered trademarks of Arm Limited (or its subsidiaries) in the US and/or elsewhere. The related technology may be protected by any or all of patents, copyrights, designs and trade secrets. All rights reserved. Oracle and Java are registered trademarks of Oracle and/or its affiliates. The Power Architecture and Power.org word marks and the Power and Power.org logos and related marks are trademarks and service marks licensed by Power.org.

© 2014–2017 NXP B.V.

Document Number KV4XP100M168
Revision 4, 09/2019