freescale™
S12 MagniV

Product One-Sheet

S12 MagniV S12ZVC

Smallest Integrated CAN MCU

System in a Package – Highly integrated part ideal for space constrained applications such as actuators, sensors, CAN nodes, etc.

Low System Cost – Directly powered by battery. Integrated CAN phy, Vreg, high voltage pins, and op-amps reduce system, test, qualification and manufacturing cost.

High Reliability – High immunity to EMI and ESD stresses, CAN HS/LS compliant with +/- 8kV ESD capability.

Enablement – Supported by comprehensive hardware and software system (free low-level drivers to enterprise third party tools) reduces development cost and time to market.

S12ZVC(A) Specifications

Flash	64-192 KB	**12V VREG**	12V/70mA, 170mA with ballast
RAM	4–12 KB	**EVDD**	1ch 5V/20mA (source)
EEPROM	1–2 KB	**NGPIO**	4ch 5V/25mA (sink)
Core	S12Z	**ADC**	10-16ch 10 bit (12 bit)
Speed	32 MHz	**DAC**	8 bit DAC with OpAmp
Op Range	5.5 V–18 V	**Comparator**	2# rail to rail
HVI	2	**Timer**	8ch/16B + 4ch/16B (16ns)
CAN Phy	1	**PWM**	4ch16B + 4ch/16B (16ns)
Op range	5.5 V – 18 V	**Comms**	1MSCAN, 2 SCI, 2 SPI, 1 IIC, 1 SENT-Tx
Temp	150°C Ta	**Packages**	64-LQFP-EP, 48-LQFP

Orderable Samples

Part Number	Temp Range	Package
S912ZVCA19F0MLF	-40°C to 125°C	48 LQFP
S912ZVCA19F0MKH	-40°C to 125°C	64 LQFP-EP
S912ZVCA19F0WKH	-40°C to 150°C	64 LQFP-EP

Features

- AEC-Q100 Grade 0 Up to 150°C Ta
- Fast 12 bit ADC, 2 Op Amps, high-res PWM/Timer
- Integrated CAN transceiver
- Ultra-reliable industrial

Get Sample **Data Sheet** **Tools**

Block Diagram

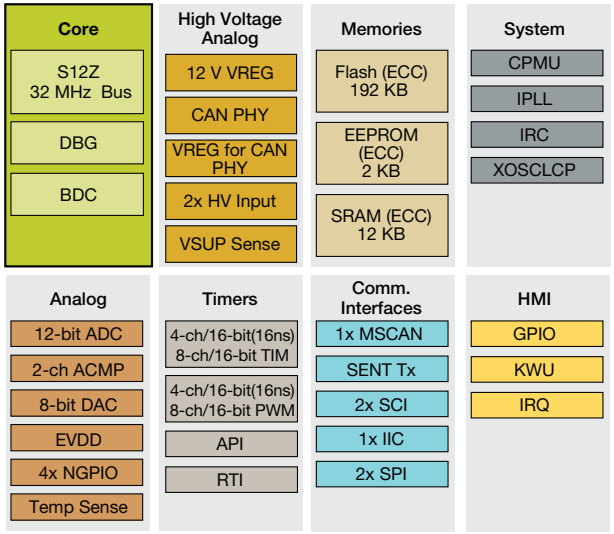

Ultrasonic Powertrain Sensor

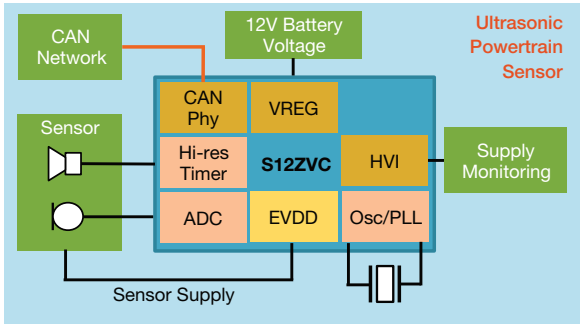

Success Stories

- CAN based sensors such as humidity, airmass, NOx, urea sensor
- HVAC Controllers
- Industrial CAN communication
- CAN connected motor control

Target Applications

- CAN nodes
- CAN switch panel/user interface
- CAN actuators, sensors
- HVAC
- Lighting controls
- Seat positioning
- Seatbelt pretentionner
- Ultrasonic sensors
- Occupant detection
- Powertrain sensors (NOx)

Enablement Tools

- Evaluation boards/hardware
  - VLG-MC9S12ZVC
- CodeWarrior, Cosmic
- LIN drivers

Product Longevity

SAFE ASSURE™ by Freescale

For more information, visit freescale.com/S12ZVC

Freescale, the Freescale logo, CodeWarrior, SafeAssure, the SafeAssure logo and MagniV are trademarks of Freescale Semiconductor, Inc., Reg. U.S. Pat. & Tm. Off. All other product or service names are the property of their respective owners. © 2015 Freescale Semiconductor, Inc.