S12 MagniV S12ZVL

Smallest Integrated LIN Slave MCU

Features

- Operates from car battery
- Ultra-reliable industrial
- Integrated LIN transceiver
- Fast ADC

Product One-Sheet

Get Sample | Data Sheet | Tools

System in a Package – Highly integrated part ideal for space constrained applications such as actuators, sensors, LIN nodes, etc.

Low System Cost – Direct connection with battery, integrated LIN Phy, EVDD and NGPIOs reduce system, qualification and manufacturing cost.

High Reliability – High immunity to EMI and ESD stresses, LIN 2.x compliant with +/- 8kV ESD capability.

Enablement – Supported by comprehensive hardware and software system (free low-level drivers to enterprise 3rd party tools) which reduces development costs and time to market.

S12ZVL Specifications

Flash EEPROM	8–128 KB, 2 KB	Timer/ PWM	6 ch. + 2 ch. 16-bit/ 8 ch. 16-bit
RAM	8 KB	12 V VREG	12 V/70 mA, 170 mA with external ballast
Core	S12Z	EVDD	1 ch. 5 V/20 mA (source)
Speed	32 MHz	NGPIO	3 ch. 5 V/25 mA (sink)
ADC	10 ch. 12-bit	SCI/SPI/I²C	2/1/1
HVI	1	Packages	32LQFP, 32QFN, 48LQFP
LIN Phy	1	Op Range	5.5 V–18 V
Amb Temp	Up to 150° C		

Part Numbers

32LQFP	32QFN-EP	48LQFP
S912ZVLA12F0MLC	S912ZVLA12F0MFM	S912ZVLA12F0MLF
S912ZVLA96F0MLC	S912ZVLA96F0MFM	S912ZVLA96F0MLF
S912ZVLA64F0MLC	S912ZVLA64F0MFM	S912ZVLA64F0MLF
S9S12ZVL32F0MLC	S9S12ZVLS3F0MFM	S9S12ZVL32F0MLF
S9S12ZVL16F0MLC	S9S12ZVLS1F0MFM	S9S12ZVL16F0MLF
S9S12ZVL8F0MLC	S9S12ZVLS8F0MFM	S9S12ZVL8F0MLF
		S912ZVLA12F0WLF
		S9S12ZVL32F0WLF

Block Diagram

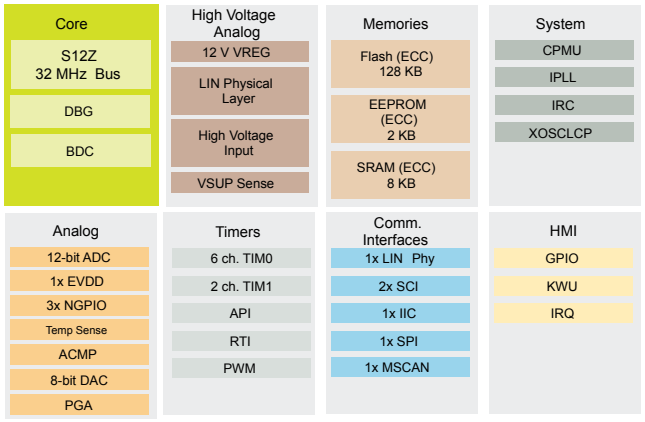

Switch Panel

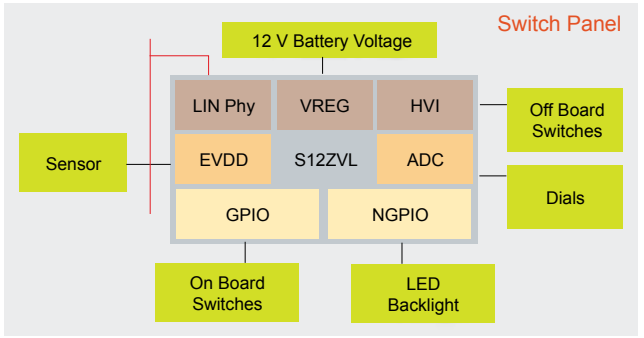

Product Longevity

SAFE ASSURE™ by NXP

Success Stories

- LIN-based user-interface in Europe and Asia
- LIN-based immobilizer receiver in US
- LIN-based mirror control in Europe
- LIN-based airquality sensor in Europe

Target Applications

- LIN nodes
- LIN switch panel/user interface
- LIN actuators, sensors
- HVAC
- Lighting controls
- Ambient lighting
- Seat positioning
- Ultrasonic sensors

Enablement Tools

Evaluation boards/hardware

- TRK-S12ZVL
- DEVKIT-ZVL128
- DEVKIT-S12ZVL

Reference solutions

- Ultrasonic distance measurement
- LIN RGB LED

CodeWarrior, Cosmic

LIN drivers

www.NXP.com/S12ZVL

NXP, the NXP logo, the SafeAssure logo and MagniV are trademarks of NXP B.V. All other product or service names are the property of their respective owners. © 2015–2018 NXP B.V.

Document Number: S12ZVLFS REV 6