MC9S12G Family Reference Manual and Data Sheet

S12 Microcontrollers

MC9S12GRMV1

Rev.1.28

December 7, 2020

nxp.com

To provide the most up-to-date information, the revision of our documents on the World Wide Web will be the most current. Your printed copy may be an earlier revision. To verify you have the latest information available, refer to:

nxp.com/

A full list of family members and options is included in the appendices.

The following revision history table summarizes changes contained in this document.

Revision History

Date	Revision Level	Description
Nov, 2012	1.19	• Corrected order of chapters
Jan, 2013	1.20	• Updated Appendix A, “Electrical Characteristics” (Reason: Added AEC Grade 0 spec) • Updated Appendix C, “Ordering and Shipping Information” (Reason: Added temperature option W)
Jan, 2013	1.21	• Separated description of 8-channel timer • Updated Appendix A, “Electrical Characteristics” (Reason: Updated electricals)
Jan, 2013	1.22	• Updated Chapter 1, “Device Overview MC9S12G-Family” (Reason: added KGD option for the S12GA192 and the S12GA240) • Updated Appendix A, “Electrical Characteristics” (Reason: Updated electricals) • Updated Appendix C, “Ordering and Shipping Information” (Reason: Added KGD information) • Added Appendix D, “Package and Die Information” (Reason: Added KGD information)
Feb, 2013	1.23	• Updated Appendix C, “Ordering and Shipping Information” (Reason: Removed KGD information)
Jul, 2014	1.24	• Updated Chapter 1, “Device Overview MC9S12G-Family” (Reason: Spec update) • Fixed wordingFixed typos and formatting, improved wording • Updated Appendix A, “Electrical Characteristics” (Reason: Updated electricals) • Updated Chapter 17, “Digital Analog Converter (DAC_8B5V)” (Reason: Spec update)
Aug, 2014	1.25	• Fixed issues with hidden text throughout the document
Jun, 2017	1.26	• Updated Chapter 1, “Device Overview MC9S12G-Family (added mask set information to Table 1-5)
Oct, 2017	1.27	• Updated Appendix A, “Electrical Characteristics (updated Table A-45 and Table A-46)
Dec, 2020	1.28	• Updated Appendix A, “Electrical Characteristics (added Table A-14)

This document contains information for all constituent modules, with the exception of the CPU. For CPU information please refer to **CPU12-1** in the **CPU12 & CPU12X Reference Manual**

Chapter 1 Device Overview MC9S12G-Family. 29
Chapter 2 Port Integration Module (S12GPIMV1) 149
Chapter 3 5V Analog Comparator (ACMPV1) 249
Chapter 4 Reference Voltage Attenuator (RVAV1) 255
Chapter 5 S12G Memory Map Controller (S12GMMCV1) 259
Chapter 6 Interrupt Module (S12SINTV1). 273
Chapter 7 Background Debug Module (S12SBDMV1) 281
Chapter 8 S12S Debug Module (S12SDBGV2) 305
Chapter 9 Security (S12XS9SECV2). 347
Chapter 10 S12 Clock, Reset and Power Management Unit (S12CPMU) 353
Chapter 11 Analog-to-Digital Converter (ADC10B8CV2) 405
Chapter 12 Analog-to-Digital Converter (ADC12B8CV2) 429
Chapter 13 Analog-to-Digital Converter (ADC10B12CV2) 455
Chapter 14 Analog-to-Digital Converter (ADC12B12CV2) 481
Chapter 15 Analog-to-Digital Converter (ADC10B16CV2) 507
Chapter 16 Analog-to-Digital Converter (ADC12B16CV2) 533
Chapter 17 Digital Analog Converter (DAC_8B5V) 559
Chapter 18 Scalable Controller Area Network (S12MSCANV3) 569
Chapter 19 Pulse-Width Modulator (S12PWM8B8CV2) 623
Chapter 20 Serial Communication Interface (S12SCIV5) 653
Chapter 21 Serial Peripheral Interface (S12SPIV5) 691
Chapter 22 Timer Module (TIM16B6CV3). 719
Chapter 23 Timer Module (TIM16B8CV3). 737
Chapter 24 16 KByte Flash Module (S12FTMRG16K1V1). 765
Chapter 25 32 KByte Flash Module (S12FTMRG32K1V1). 813
Chapter 26 48 KByte Flash Module (S12FTMRG48K1V1). 865
Chapter 27 64 KByte Flash Module (S12FTMRG64K1V1). 917
Chapter 28 96 KByte Flash Module (S12FTMRG96K1V1). 969

Chapter 29 128 KByte Flash Module (S12FTMRG128K1V1). 1021
Chapter 30 192 KByte Flash Module (S12FTMRG192K2V1). 1073
Chapter 31 240 KByte Flash Module (S12FTMRG240K2V1). 1125

Appendix A Electrical Characteristics 1177
Appendix B Detailed Register Address Map. 1233
Appendix C Ordering and Shipping Information 1253
Appendix D Package and Die Information 1255

Chapter 1
Device Overview MC9S12G-Family

1.1 Introduction . . . 29
1.2 Features . . . 30
1.2.1 MC9S12G-Family Comparison . . . 30
1.2.2 Chip-Level Features . . . 32
1.3 Module Features . . . 32
1.3.1 S12 16-Bit Central Processor Unit (CPU) . . . 33
1.3.2 On-Chip Flash with ECC . . . 33
1.3.3 On-Chip SRAM . . . 33
1.3.4 Port Integration Module (PIM) . . . 33
1.3.5 Main External Oscillator (XOSCLCP) . . . 34
1.3.6 Internal RC Oscillator (IRC) . . . 34
1.3.7 Internal Phase-Locked Loop (IPLL) . . . 34
1.3.8 System Integrity Support . . . 35
1.3.9 Timer (TIM) . . . 35
1.3.10 Pulse Width Modulation Module (PWM) . . . 35
1.3.11 Controller Area Network Module (MSCAN) . . . 35
1.3.12 Serial Communication Interface Module (SCI) . . . 36
1.3.13 Serial Peripheral Interface Module (SPI) . . . 36
1.3.14 Analog-to-Digital Converter Module (ADC) . . . 36
1.3.15 Reference Voltage Attenuator (RVA) . . . 37
1.3.16 Digital-to-Analog Converter Module (DAC) . . . 37
1.3.17 Analog Comparator (ACMP) . . . 37
1.3.18 On-Chip Voltage Regulator (VREG) . . . 37
1.3.19 Background Debug (BDM) . . . 37
1.3.20 Debugger (DBG) . . . 37
1.4 Key Performance Parameters . . . 38
1.5 Block Diagram . . . 38
1.6 Family Memory Map . . . 39
1.6.1 Part ID Assignments . . . 44
1.7 Signal Description and Device Pinouts . . . 45
1.7.1 Pin Assignment Overview . . . 45
1.7.2 Detailed Signal Descriptions . . . 46
1.7.3 Power Supply Pins . . . 50
1.8 Device Pinouts . . . 53
1.8.1 S12GN16 and S12GN32 . . . 53
1.8.2 S12GNA16 and S12GNA32 . . . 60
1.8.3 S12GN48 . . . 62
1.8.4 S12G48 and S12G64 . . . 72
1.8.5 S12GA48 and S12GA64 . . . 82
1.8.6 S12G96 and S12G128 . . . 89
1.8.7 S12GA96 and S12GA128 . . . 101
1.8.8 S12G192 and S12G240 . . . 113
1.8.9 S12GA192 and S12GA240 . . . 125

1.9 System Clock Description 140
1.10 Modes of Operation 140
1.10.1 Chip Configuration Summary 141
1.10.2 Low Power Operation 141
1.11 Security 141
1.12 Resets and Interrupts 141
1.12.1 Resets 141
1.12.2 Interrupt Vectors 142
1.12.3 Effects of Reset 144
1.13 COP Configuration 144
1.14 Autonomous Clock (ACLK) Configuration 145
1.15 ADC External Trigger Input Connection 145
1.16 ADC Special Conversion Channels 145
1.17 ADC Result Reference 146
1.18 ADC VRH/VRL Signal Connection 146
1.19 BDM Clock Source Connectivity 147

Chapter 2
Port Integration Module (S12GPIMV1)

2.1 Introduction 149
2.1.1 Glossary 149
2.1.2 Overview 150
2.1.3 Features 150
2.1.4 Block Diagram 151
2.2 PIM Routing - External Signal Description 151
2.2.1 Package Code 152
2.2.2 Prioritization 152
2.2.3 Signals and Priorities 152
2.3 PIM Routing - Functional description 154
2.3.1 Pin BKGD 163
2.3.2 Pins PA7-0 163
2.3.3 Pins PB7-0 163
2.3.4 Pins PC7-0 163
2.3.5 Pins PD7-0 165
2.3.6 Pins PE1-0 165
2.3.7 Pins PT7-0 165
2.3.8 Pins PS7-0 167
2.3.9 Pins PM3-0 169
2.3.10 Pins PP7-0 169
2.3.11 Pins PJ7-0 171
2.3.12 Pins AD15-0 172
2.4 PIM Ports - Memory Map and Register Definition 178
2.4.1 Memory Map 178
2.4.2 Register Map 181
2.4.3 Register Descriptions 196

2.5 PIM Ports - Functional Description . . . 241
2.5.1 General . . . 241
2.5.2 Registers . . . 241
2.5.3 Pin Configuration Summary . . . 243
2.5.4 Interrupts . . . 244
2.6 Initialization/Application Information . . . 246
2.6.1 Initialization . . . 246
2.6.2 Port Data and Data Direction Register writes . . . 246
2.6.3 Enabling IRQ edge-sensitive mode . . . 246
2.6.4 ADC External Triggers ETRIG3-0 . . . 246
2.6.5 Emulation of Smaller Packages . . . 247

Chapter 3
5V Analog Comparator (ACMPV1)

3.1 Introduction . . . 249
3.2 Features . . . 249
3.3 Block Diagram . . . 249
3.4 External Signals . . . 250
3.5 Modes of Operation . . . 250
3.6 Memory Map and Register Definition . . . 251
3.6.1 Register Map . . . 251
3.6.2 Register Descriptions . . . 251
3.7 Functional Description . . . 253

Chapter 4
Reference Voltage Attenuator (RVAV1)

4.1 Introduction . . . 255
4.2 Features . . . 255
4.3 Block Diagram . . . 255
4.4 External Signals . . . 256
4.5 Modes of Operation . . . 256
4.6 Memory Map and Register Definition . . . 257
4.6.1 Register Map . . . 257
4.6.2 Register Descriptions . . . 257
4.7 Functional Description . . . 258

Chapter 5
S12G Memory Map Controller (S12GMMCV1)

5.1 Introduction . . . 259
5.1.1 Glossary . . . 259
5.1.2 Overview . . . 259
5.1.3 Features . . . 260
5.1.4 Modes of Operation . . . 260
5.1.5 Block Diagram . . . 260

5.2 External Signal Description 261
5.3 Memory Map and Registers 261
5.3.1 Module Memory Map 261
5.3.2 Register Descriptions 262
5.4 Functional Description 266
5.4.1 MCU Operating Modes 266
5.4.2 Memory Map Scheme 266
5.4.3 Unimplemented and Reserved Address Ranges 270
5.4.4 Prioritization of Memory Accesses 271
5.4.5 Interrupts 271

Chapter 6
Interrupt Module (S12SINTV1)

6.1 Introduction 273
6.1.1 Glossary 273
6.1.2 Features 273
6.1.3 Modes of Operation 274
6.1.4 Block Diagram 274
6.2 External Signal Description 275
6.3 Memory Map and Register Definition 275
6.3.1 Register Descriptions 275
6.4 Functional Description 276
6.4.1 S12S Exception Requests 276
6.4.2 Interrupt Prioritization 276
6.4.3 Reset Exception Requests 277
6.4.4 Exception Priority 277
6.5 Initialization/Application Information 278
6.5.1 Initialization 278
6.5.2 Interrupt Nesting 278
6.5.3 Wake Up from Stop or Wait Mode 278

Chapter 7
Background Debug Module (S12SBDMV1)

7.1 Introduction 281
7.1.1 Features 281
7.1.2 Modes of Operation 282
7.1.3 Block Diagram 283
7.2 External Signal Description 283
7.3 Memory Map and Register Definition 283
7.3.1 Module Memory Map 283
7.3.2 Register Descriptions 284
7.3.3 Family ID Assignment 287
7.4 Functional Description 287
7.4.1 Security 288

7.4.2 Enabling and Activating BDM . . . 288
7.4.3 BDM Hardware Commands . . . 289
7.4.4 Standard BDM Firmware Commands . . . 290
7.4.5 BDM Command Structure . . . 291
7.4.6 BDM Serial Interface . . . 293
7.4.7 Serial Interface Hardware Handshake Protocol . . . 296
7.4.8 Hardware Handshake Abort Procedure . . . 298
7.4.9 SYNC — Request Timed Reference Pulse . . . 301
7.4.10 Instruction Tracing . . . 301
7.4.11 Serial Communication Time Out . . . 302

Chapter 8
S12S Debug Module (S12SDBGV2)

8.1 Introduction . . . 305
8.1.1 Glossary Of Terms . . . 305
8.1.2 Overview . . . 306
8.1.3 Features . . . 306
8.1.4 Modes of Operation . . . 307
8.1.5 Block Diagram . . . 307
8.2 External Signal Description . . . 308
8.3 Memory Map and Registers . . . 308
8.3.1 Module Memory Map . . . 308
8.3.2 Register Descriptions . . . 309
8.4 Functional Description . . . 324
8.4.1 S12SDBG Operation . . . 325
8.4.2 Comparator Modes . . . 325
8.4.3 Match Modes (Forced or Tagged) . . . 329
8.4.4 State Sequence Control . . . 330
8.4.5 Trace Buffer Operation . . . 331
8.4.6 Tagging . . . 338
8.4.7 Breakpoints . . . 338
8.5 Application Information . . . 340
8.5.1 State Machine scenarios . . . 340
8.5.2 Scenario 1 . . . 340
8.5.3 Scenario 2 . . . 341
8.5.4 Scenario 3 . . . 341
8.5.5 Scenario 4 . . . 341
8.5.6 Scenario 5 . . . 343
8.5.7 Scenario 6 . . . 343
8.5.8 Scenario 7 . . . 343
8.5.9 Scenario 8 . . . 344
8.5.10 Scenario 9 . . . 344
8.5.11 Scenario 10 . . . 344

Chapter 9
Security (S12XS9SECV2)

9.1 Introduction . . . 347
9.1.1 Features . . . 347
9.1.2 Modes of Operation . . . 347
9.1.3 Securing the Microcontroller . . . 348
9.1.4 Operation of the Secured Microcontroller . . . 349
9.1.5 Unsecuring the Microcontroller . . . 350
9.1.6 Reprogramming the Security Bits . . . 350
9.1.7 Complete Memory Erase (Special Modes) . . . 351

Chapter 10
S12 Clock, Reset and Power Management Unit (S12CPMU)

10.1 Introduction . . . 353
10.1.1 Features . . . 354
10.1.2 Modes of Operation . . . 355
10.1.3 S12CPMU Block Diagram . . . 358
10.2 Signal Description . . . 359
10.2.1 RESET . . . 359
10.2.2 EXTAL and XTAL . . . 359
10.2.3 VDDR — Regulator Power Input Pin . . . 360
10.2.4 VSS — Ground Pin . . . 360
10.2.5 VDDA, VSSA — Regulator Reference Supply Pins . . . 360
10.2.6 VDDX, VSSX— Pad Supply Pins . . . 360
10.2.7 VDD — Internal Regulator Output Supply (Core Logic) . . . 361
10.2.8 VDDF — Internal Regulator Output Supply (NVM Logic) . . . 361
10.2.9 API_EXTCLK — API external clock output pin . . . 361
10.3 Memory Map and Registers . . . 361
10.3.1 Module Memory Map . . . 361
10.3.2 Register Descriptions . . . 363
10.4 Functional Description . . . 389
10.4.1 Phase Locked Loop with Internal Filter (PLL) . . . 389
10.4.2 Startup from Reset . . . 390
10.4.3 Stop Mode using PLLCLK as Bus Clock . . . 391
10.4.4 Full Stop Mode using Oscillator Clock as Bus Clock . . . 391
10.4.5 External Oscillator . . . 392
10.4.6 System Clock Configurations . . . 393
10.5 Resets . . . 395
10.5.1 General . . . 395
10.5.2 Description of Reset Operation . . . 395
10.5.3 Power-On Reset (POR) . . . 397
10.5.4 Low-Voltage Reset (LVR) . . . 397
10.6 Interrupts . . . 398
10.6.1 Description of Interrupt Operation . . . 398

10.7 Initialization/Application Information 400
10.7.1 General Initialization information 400
10.7.2 Application information for COP and API usage 400

Chapter 11
Analog-to-Digital Converter (ADC10B8CV2)

11.1 Introduction 405
11.1.1 Features 406
11.1.2 Modes of Operation 407
11.1.3 Block Diagram 408
11.2 Signal Description 409
11.2.1 Detailed Signal Descriptions 409
11.3 Memory Map and Register Definition 409
11.3.1 Module Memory Map 409
11.3.2 Register Descriptions 411
11.4 Functional Description 426
11.4.1 Analog Sub-Block 426
11.4.2 Digital Sub-Block 426
11.5 Resets 428
11.6 Interrupts 428

Chapter 12
Analog-to-Digital Converter (ADC12B8CV2)

12.1 Introduction 429
12.1.1 Features 430
12.1.2 Modes of Operation 431
12.1.3 Block Diagram 432
12.2 Signal Description 433
12.2.1 Detailed Signal Descriptions 433
12.3 Memory Map and Register Definition 433
12.3.1 Module Memory Map 433
12.3.2 Register Descriptions 435
12.4 Functional Description 451
12.4.1 Analog Sub-Block 451
12.4.2 Digital Sub-Block 451
12.5 Resets 453
12.6 Interrupts 453

Chapter 13
Analog-to-Digital Converter (ADC10B12CV2)

13.1 Introduction 456
13.1.1 Features 456
13.1.2 Modes of Operation 457
13.1.3 Block Diagram 458

13.2 Signal Description 459
13.2.1 Detailed Signal Descriptions 459
13.3 Memory Map and Register Definition 459
13.3.1 Module Memory Map 459
13.3.2 Register Descriptions 462
13.4 Functional Description 477
13.4.1 Analog Sub-Block 477
13.4.2 Digital Sub-Block 477
13.5 Resets 479
13.6 Interrupts 479

Chapter 14
Analog-to-Digital Converter (ADC12B12CV2)

14.1 Introduction 482
14.1.1 Features 482
14.1.2 Modes of Operation 483
14.1.3 Block Diagram 484
14.2 Signal Description 485
14.2.1 Detailed Signal Descriptions 485
14.3 Memory Map and Register Definition 485
14.3.1 Module Memory Map 485
14.3.2 Register Descriptions 488
14.4 Functional Description 504
14.4.1 Analog Sub-Block 504
14.4.2 Digital Sub-Block 504
14.5 Resets 506
14.6 Interrupts 506

Chapter 15
Analog-to-Digital Converter (ADC10B16CV2)

15.1 Introduction 508
15.1.1 Features 508
15.1.2 Modes of Operation 509
15.1.3 Block Diagram 510
15.2 Signal Description 511
15.2.1 Detailed Signal Descriptions 511
15.3 Memory Map and Register Definition 511
15.3.1 Module Memory Map 511
15.3.2 Register Descriptions 514
15.4 Functional Description 529
15.4.1 Analog Sub-Block 529
15.4.2 Digital Sub-Block 529
15.5 Resets 531
15.6 Interrupts 531

Chapter 16
Analog-to-Digital Converter (ADC12B16CV2)

16.1 Introduction . . . 534
16.1.1 Features . . . 534
16.1.2 Modes of Operation . . . 535
16.1.3 Block Diagram . . . 536
16.2 Signal Description . . . 537
16.2.1 Detailed Signal Descriptions . . . 537
16.3 Memory Map and Register Definition . . . 537
16.3.1 Module Memory Map . . . 537
16.3.2 Register Descriptions . . . 540
16.4 Functional Description . . . 556
16.4.1 Analog Sub-Block . . . 556
16.4.2 Digital Sub-Block . . . 556
16.5 Resets . . . 558
16.6 Interrupts . . . 558

Chapter 17
Digital Analog Converter (DAC_8B5V)

17.1 Revision History . . . 559
17.2 Introduction . . . 559
17.2.1 Features . . . 560
17.2.2 Modes of Operation . . . 560
17.2.3 Block Diagram . . . 561
17.3 External Signal Description . . . 561
17.3.1 DACU Output Pin . . . 561
17.3.2 AMP Output Pin . . . 561
17.3.3 AMPP Input Pin . . . 561
17.3.4 AMPM Input Pin . . . 562
17.4 Memory Map and Register Definition . . . 562
17.4.1 Register Summary . . . 562
17.4.2 Register Descriptions . . . 563
17.5 Functional Description . . . 564
17.5.1 Functional Overview . . . 564
17.5.2 Mode “Off” . . . 565
17.5.3 Mode “Operational Amplifier” . . . 565
17.5.4 Mode “Unbuffered DAC” . . . 566
17.5.5 Mode “Unbuffered DAC with Operational Amplifier” . . . 566
17.5.6 Mode “Buffered DAC” . . . 566
17.5.7 Analog output voltage calculation . . . 566

Chapter 18
Scalable Controller Area Network (S12MSCANV3)

18.1 Introduction . . . 569

18.1.1 Glossary . . . 570
18.1.2 Block Diagram . . . 570
18.1.3 Features . . . 571
18.1.4 Modes of Operation . . . 571
18.2 External Signal Description . . . 571
18.2.1 RXCAN — CAN Receiver Input Pin . . . 571
18.2.2 TXCAN — CAN Transmitter Output Pin . . . 572
18.2.3 CAN System . . . 572
18.3 Memory Map and Register Definition . . . 572
18.3.1 Module Memory Map . . . 572
18.3.2 Register Descriptions . . . 574
18.3.3 Programmer's Model of Message Storage . . . 593
18.4 Functional Description . . . 603
18.4.1 General . . . 603
18.4.2 Message Storage . . . 604
18.4.3 Identifier Acceptance Filter . . . 607
18.4.4 Modes of Operation . . . 613
18.4.5 Low-Power Options . . . 615
18.4.6 Reset Initialization . . . 619
18.4.7 Interrupts . . . 619
18.5 Initialization/Application Information . . . 621
18.5.1 MSCAN initialization . . . 621
18.5.2 Bus-Off Recovery . . . 621

Chapter 19
Pulse-Width Modulator (S12PWM8B8CV2)

19.1 Introduction . . . 623
19.1.1 Features . . . 623
19.1.2 Modes of Operation . . . 623
19.1.3 Block Diagram . . . 624
19.2 External Signal Description . . . 624
19.2.1 PWM7 - PWM0 — PWM Channel 7 - 0 . . . 624
19.3 Memory Map and Register Definition . . . 625
19.3.1 Module Memory Map . . . 625
19.3.2 Register Descriptions . . . 625
19.4 Functional Description . . . 640
19.4.1 PWM Clock Select . . . 640
19.4.2 PWM Channel Timers . . . 643
19.5 Resets . . . 650
19.6 Interrupts . . . 651

Chapter 20
Serial Communication Interface (S12SCIV5)

20.1 Introduction . . . 653

20.1.1 Glossary . . . 653
20.1.2 Features . . . 654
20.1.3 Modes of Operation . . . 654
20.1.4 Block Diagram . . . 655
20.2 External Signal Description . . . 655
20.2.1 TXD — Transmit Pin . . . 655
20.2.2 RXD — Receive Pin . . . 655
20.3 Memory Map and Register Definition . . . 655
20.3.1 Module Memory Map and Register Definition . . . 656
20.3.2 Register Descriptions . . . 656
20.4 Functional Description . . . 667
20.4.1 Infrared Interface Submodule . . . 668
20.4.2 LIN Support . . . 669
20.4.3 Data Format . . . 669
20.4.4 Baud Rate Generation . . . 671
20.4.5 Transmitter . . . 672
20.4.6 Receiver . . . 677
20.4.7 Single-Wire Operation . . . 685
20.4.8 Loop Operation . . . 686
20.5 Initialization/Application Information . . . 686
20.5.1 Reset Initialization . . . 686
20.5.2 Modes of Operation . . . 686
20.5.3 Interrupt Operation . . . 687
20.5.4 Recovery from Wait Mode . . . 689
20.5.5 Recovery from Stop Mode . . . 689

Chapter 21
Serial Peripheral Interface (S12SPIV5)

21.1 Introduction . . . 691
21.1.1 Glossary of Terms . . . 691
21.1.2 Features . . . 691
21.1.3 Modes of Operation . . . 692
21.1.4 Block Diagram . . . 692
21.2 External Signal Description . . . 693
21.2.1 MOSI — Master Out/Slave In Pin . . . 693
21.2.2 MISO — Master In/Slave Out Pin . . . 694
21.2.3 $\overline{SS}$ — Slave Select Pin . . . 694
21.2.4 SCK — Serial Clock Pin . . . 694
21.3 Memory Map and Register Definition . . . 694
21.3.1 Module Memory Map . . . 694
21.3.2 Register Descriptions . . . 695
21.4 Functional Description . . . 703
21.4.1 Master Mode . . . 704
21.4.2 Slave Mode . . . 705
21.4.3 Transmission Formats . . . 706

21.4.4 SPI Baud Rate Generation . . . 712
21.4.5 Special Features . . . 713
21.4.6 Error Conditions . . . 714
21.4.7 Low Power Mode Options . . . 715

Chapter 22
Timer Module (TIM16B6CV3)

22.1 Introduction . . . 719
22.1.1 Features . . . 719
22.1.2 Modes of Operation . . . 720
22.1.3 Block Diagrams . . . 720
22.2 External Signal Description . . . 721
22.2.1 IOC5 - IOC0 — Input Capture and Output Compare Channel 5-0 . . . 721
22.3 Memory Map and Register Definition . . . 721
22.3.1 Module Memory Map . . . 721
22.3.2 Register Descriptions . . . 721
22.4 Functional Description . . . 733
22.4.1 Prescaler . . . 734
22.4.2 Input Capture . . . 735
22.4.3 Output Compare . . . 735
22.5 Resets . . . 736
22.6 Interrupts . . . 736
22.6.1 Channel [5:0] Interrupt (C[5:0]F) . . . 736
22.6.2 Timer Overflow Interrupt (TOF) . . . 736

Chapter 23
Timer Module (TIM16B8CV3)

23.1 Introduction . . . 737
23.1.1 Features . . . 737
23.1.2 Modes of Operation . . . 738
23.1.3 Block Diagrams . . . 738
23.2 External Signal Description . . . 741
23.2.1 IOC7 — Input Capture and Output Compare Channel 7 . . . 741
23.2.2 IOC6 - IOC0 — Input Capture and Output Compare Channel 6-0 . . . 741
23.3 Memory Map and Register Definition . . . 741
23.3.1 Module Memory Map . . . 741
23.3.2 Register Descriptions . . . 742
23.4 Functional Description . . . 758
23.4.1 Prescaler . . . 760
23.4.2 Input Capture . . . 760
23.4.3 Output Compare . . . 760
23.4.4 Pulse Accumulator . . . 761
23.4.5 Event Counter Mode . . . 762
23.4.6 Gated Time Accumulation Mode . . . 762

23.5 Resets 762
23.6 Interrupts 762
23.6.1 Channel [7:0] Interrupt (C[7:0]F) 763
23.6.2 Pulse Accumulator Input Interrupt (PAOVI) 763
23.6.3 Pulse Accumulator Overflow Interrupt (PAOVF) 763
23.6.4 Timer Overflow Interrupt (TOF) 763

Chapter 24
16 KByte Flash Module (S12FTMRG16K1V1)

24.1 Introduction 765
24.1.1 Glossary 766
24.1.2 Features 766
24.1.3 Block Diagram 767
24.2 External Signal Description 768
24.3 Memory Map and Registers 769
24.3.1 Module Memory Map 769
24.3.2 Register Descriptions 772
24.4 Functional Description 789
24.4.1 Modes of Operation 789
24.4.2 IFR Version ID Word 789
24.4.3 Internal NVM resource (NVMRES) 789
24.4.4 Flash Command Operations 789
24.4.5 Allowed Simultaneous P-Flash and EEPROM Operations 794
24.4.6 Flash Command Description 795
24.4.7 Interrupts 809
24.4.8 Wait Mode 810
24.4.9 Stop Mode 810
24.5 Security 810
24.5.1 Unsecuring the MCU using Backdoor Key Access 810
24.5.2 Unsecuring the MCU in Special Single Chip Mode using BDM 811
24.5.3 Mode and Security Effects on Flash Command Availability 812
24.6 Initialization 812

Chapter 25
32 KByte Flash Module (S12FTMRG32K1V1)

25.1 Introduction 813
25.1.1 Glossary 814
25.1.2 Features 814
25.1.3 Block Diagram 815
25.2 External Signal Description 816
25.3 Memory Map and Registers 817
25.3.1 Module Memory Map 817
25.3.2 Register Descriptions 820
25.4 Functional Description 839

25.4.1 Modes of Operation . . . 839
25.4.2 IFR Version ID Word . . . 839
25.4.3 Internal NVM resource (NVMRES) . . . 840
25.4.4 Flash Command Operations . . . 840
25.4.5 Allowed Simultaneous P-Flash and EEPROM Operations . . . 845
25.4.6 Flash Command Description . . . 846
25.4.7 Interrupts . . . 860
25.4.8 Wait Mode . . . 861
25.4.9 Stop Mode . . . 861
25.5 Security . . . 861
25.5.1 Unsecuring the MCU using Backdoor Key Access . . . 861
25.5.2 Unsecuring the MCU in Special Single Chip Mode using BDM . . . 862
25.5.3 Mode and Security Effects on Flash Command Availability . . . 863
25.6 Initialization . . . 863

Chapter 26
48 KByte Flash Module (S12FTMRG48K1V1)

26.1 Introduction . . . 865
26.1.1 Glossary . . . 866
26.1.2 Features . . . 866
26.1.3 Block Diagram . . . 868
26.2 External Signal Description . . . 868
26.3 Memory Map and Registers . . . 869
26.3.1 Module Memory Map . . . 869
26.3.2 Register Descriptions . . . 873
26.4 Functional Description . . . 892
26.4.1 Modes of Operation . . . 892
26.4.2 IFR Version ID Word . . . 892
26.4.3 Internal NVM resource (NVMRES) . . . 893
26.4.4 Flash Command Operations . . . 893
26.4.5 Allowed Simultaneous P-Flash and EEPROM Operations . . . 898
26.4.6 Flash Command Description . . . 899
26.4.7 Interrupts . . . 913
26.4.8 Wait Mode . . . 914
26.4.9 Stop Mode . . . 914
26.5 Security . . . 914
26.5.1 Unsecuring the MCU using Backdoor Key Access . . . 914
26.5.2 Unsecuring the MCU in Special Single Chip Mode using BDM . . . 915
26.5.3 Mode and Security Effects on Flash Command Availability . . . 916
26.6 Initialization . . . 916

Chapter 27
64 KByte Flash Module (S12FTMRG64K1V1)

27.1 Introduction . . . 917

27.1.1 Glossary . . . 918
27.1.2 Features . . . 918
27.1.3 Block Diagram . . . 919
27.2 External Signal Description . . . 920
27.3 Memory Map and Registers . . . 921
27.3.1 Module Memory Map . . . 921
27.3.2 Register Descriptions . . . 924
27.4 Functional Description . . . 943
27.4.1 Modes of Operation . . . 943
27.4.2 IFR Version ID Word . . . 943
27.4.3 Internal NVM resource (NVMRES) . . . 944
27.4.4 Flash Command Operations . . . 944
27.4.5 Allowed Simultaneous P-Flash and EEPROM Operations . . . 949
27.4.6 Flash Command Description . . . 950
27.4.7 Interrupts . . . 964
27.4.8 Wait Mode . . . 965
27.4.9 Stop Mode . . . 965
27.5 Security . . . 965
27.5.1 Unsecuring the MCU using Backdoor Key Access . . . 965
27.5.2 Unsecuring the MCU in Special Single Chip Mode using BDM . . . 966
27.5.3 Mode and Security Effects on Flash Command Availability . . . 967
27.6 Initialization . . . 967

Chapter 28
96 KByte Flash Module (S12FTMRG96K1V1)

28.1 Introduction . . . 969
28.1.1 Glossary . . . 970
28.1.2 Features . . . 970
28.1.3 Block Diagram . . . 971
28.2 External Signal Description . . . 972
28.3 Memory Map and Registers . . . 973
28.3.1 Module Memory Map . . . 973
28.3.2 Register Descriptions . . . 976
28.4 Functional Description . . . 995
28.4.1 Modes of Operation . . . 995
28.4.2 IFR Version ID Word . . . 995
28.4.3 Internal NVM resource (NVMRES) . . . 996
28.4.4 Flash Command Operations . . . 996
28.4.5 Allowed Simultaneous P-Flash and EEPROM Operations . . . 1001
28.4.6 Flash Command Description . . . 1002
28.4.7 Interrupts . . . 1016
28.4.8 Wait Mode . . . 1017
28.4.9 Stop Mode . . . 1017
28.5 Security . . . 1017
28.5.1 Unsecuring the MCU using Backdoor Key Access . . . 1017

28.5.2 Unsecuring the MCU in Special Single Chip Mode using BDM 1018
28.5.3 Mode and Security Effects on Flash Command Availability 1019
28.6 Initialization 1019

Chapter 29
128 KByte Flash Module (S12FTMRG128K1V1)

29.1 Introduction 1021
29.1.1 Glossary 1022
29.1.2 Features 1022
29.1.3 Block Diagram 1023
29.2 External Signal Description 1024
29.3 Memory Map and Registers 1025
29.3.1 Module Memory Map 1025
29.3.2 Register Descriptions 1029
29.4 Functional Description 1047
29.4.1 Modes of Operation 1047
29.4.2 IFR Version ID Word 1047
29.4.3 Internal NVM resource (NVMRES) 1048
29.4.4 Flash Command Operations 1048
29.4.5 Allowed Simultaneous P-Flash and EEPROM Operations 1053
29.4.6 Flash Command Description 1054
29.4.7 Interrupts 1068
29.4.8 Wait Mode 1069
29.4.9 Stop Mode 1069
29.5 Security 1069
29.5.1 Unsecuring the MCU using Backdoor Key Access 1069
29.5.2 Unsecuring the MCU in Special Single Chip Mode using BDM 1070
29.5.3 Mode and Security Effects on Flash Command Availability 1071
29.6 Initialization 1071

Chapter 30
192 KByte Flash Module (S12FTMRG192K2V1)

30.1 Introduction 1073
30.1.1 Glossary 1074
30.1.2 Features 1074
30.1.3 Block Diagram 1075
30.2 External Signal Description 1076
30.3 Memory Map and Registers 1077
30.3.1 Module Memory Map 1077
30.3.2 Register Descriptions 1081
30.4 Functional Description 1099
30.4.1 Modes of Operation 1099
30.4.2 IFR Version ID Word 1099
30.4.3 Internal NVM resource (NVMRES) 1100

30.4.4 Flash Command Operations 1100
30.4.5 Allowed Simultaneous P-Flash and EEPROM Operations 1105
30.4.6 Flash Command Description 1106
30.4.7 Interrupts 1119
30.4.8 Wait Mode 1120
30.4.9 Stop Mode 1120
30.5 Security 1121
30.5.1 Unsecuring the MCU using Backdoor Key Access 1121
30.5.2 Unsecuring the MCU in Special Single Chip Mode using BDM 1122
30.5.3 Mode and Security Effects on Flash Command Availability 1122
30.6 Initialization 1122

Chapter 31
240 KByte Flash Module (S12FTMRG240K2V1)

31.1 Introduction 1125
31.1.1 Glossary 1126
31.1.2 Features 1126
31.1.3 Block Diagram 1127
31.2 External Signal Description 1128
31.3 Memory Map and Registers 1129
31.3.1 Module Memory Map 1129
31.3.2 Register Descriptions 1133
31.4 Functional Description 1151
31.4.1 Modes of Operation 1151
31.4.2 IFR Version ID Word 1151
31.4.3 Internal NVM resource (NVMRES) 1152
31.4.4 Flash Command Operations 1152
31.4.5 Allowed Simultaneous P-Flash and EEPROM Operations 1157
31.4.6 Flash Command Description 1158
31.4.7 Interrupts 1171
31.4.8 Wait Mode 1172
31.4.9 Stop Mode 1172
31.5 Security 1173
31.5.1 Unsecuring the MCU using Backdoor Key Access 1173
31.5.2 Unsecuring the MCU in Special Single Chip Mode using BDM 1174
31.5.3 Mode and Security Effects on Flash Command Availability 1174
31.6 Initialization 1174

Appendix A
Electrical Characteristics

A.1 General 1178
A.1.1 Parameter Classification 1178
A.1.2 Power Supply 1178
A.1.3 Pins 1179

A.1.4 Current Injection 1179
A.1.5 Absolute Maximum Ratings 1180
A.1.6 ESD Protection and Latch-up Immunity 1180
A.1.7 Operating Conditions 1181
A.1.8 Power Dissipation and Thermal Characteristics 1183
A.2 I/O Characteristics 1187
A.3 Supply Currents 1191
A.3.1 Measurement Conditions 1191
A.4 ADC Characteristics 1196
A.4.1 ADC Operating Characteristics 1196
A.4.2 Factors Influencing Accuracy 1197
A.4.3 ADC Accuracy 1198
A.4.4 ADC Temperature Sensor 1208
A.5 ACMP Characteristics 1208
A.6 DAC Characteristics 1210
A.7 NVM 1211
A.7.1 Timing Parameters 1211
A.7.2 NVM Reliability Parameters 1216
A.8 Phase Locked Loop 1217
A.8.1 Jitter Definitions 1217
A.8.2 Electrical Characteristics for the PLL 1219
A.9 Electrical Characteristics for the IRC1M 1219
A.10 Electrical Characteristics for the Oscillator (XOSCLCP) 1221
A.11 Reset Characteristics 1222
A.12 Electrical Specification for Voltage Regulator 1223
A.13 Chip Power-up and Voltage Drops 1225
A.14 MSCAN 1226
A.15 SPI Timing 1227
A.15.1 Master Mode 1227
A.15.2 Slave Mode 1229
A.16 ADC Conversion Result Reference 1231

Appendix B
Detailed Register Address Map

B.1 Detailed Register Map 1233

Appendix C
Ordering and Shipping Information

C.1 Ordering Information 1253

Appendix D
Package and Die Information

D.1 100 LQFP Mechanical Dimensions 1256
D.2 64 LQFP Mechanical Dimensions 1259

D.3 48 LQFP Mechanical Dimensions 1262
D.4 48 QFN Mechanical Dimensions 1264
D.5 32 LQFP Mechanical Dimensions 1267
D.6 20 TSSOP Mechanical Dimensions 1270
D.7 KGD Information 1273

Chapter 1
Device Overview MC9S12G-Family

Revision History

Version Number	Revision Date	Description of Changes
Rev 0.27	1-Apr-2011	• Typos and formatting
Rev 0.28	11-May-2011	•
Rev 0.29	10-Jan-2011	• Corrected Figure 1-4
Rev 0.30	10-Feb-2012	• Updated Table 1-5(added mask set 1N75C) • Typos and formatting
Rev 0.31	15-Mar-2012	• Updated Table 1-1 (added S12GSA devices) • Updated Figure 1-1 • Updated Table 1-5 (added S12GA devices) • Added Section 1.8.2, “S12GNA16 and S12GNA32” • Added Section 1.8.5, “S12GA48 and S12GA64” • Added Section 1.8.7, “S12GA96 and S12GA128” • Typos and formatting
Rev 0.32	07-May-2012	• Updated Section 1.19, “BDM Clock Source Connectivity” • Typos and formatting
Rev 0.33	27-Sep-2012	• Corrected Figure 1-4 • Corrected Figure 1-5 • Corrected Figure 1-6
Rev 0.34	25-Jan-2013	Added KGD option for the S12GA192 and the S12GA240 • Updated Table 1-1 • Corrected Table 1-2 • Corrected Table 1-6
Rev 0.35	02-Jul-2014	• Corrected Table 1-2
Rev 0.36	14-Jun-2017	• Extended Table 1-5

1.1 Introduction

The MC9S12G-Family is an optimized, automotive, 16-bit microcontroller product line focused on low-cost, high-performance, and low pin-count. This family is intended to bridge between high-end 8-bit microcontrollers and high-performance 16-bit microcontrollers, such as the MC9S12XS-Family. The MC9S12G-Family is targeted at generic automotive applications requiring CAN or LIN/J2602 communication. Typical examples of these applications include body controllers, occupant detection, door modules, seat controllers, RKE receivers, smart actuators, lighting modules, and smart junction boxes.

The MC9S12G-Family uses many of the same features found on the MC9S12XS- and MC9S12P-Family, including error correction code (ECC) on flash memory, a fast analog-to-digital converter (ADC) and a frequency modulated phase locked loop (IPLL) that improves the EMC performance.

The MC9S12G-Family is optimized for lower program memory sizes down to 16k. In order to simplify customer use it features an EEPROM with a small 4 bytes erase sector size.

The MC9S12G-Family deliver all the advantages and efficiencies of a 16-bit MCU while retaining the low cost, power consumption, EMC, and code-size efficiency advantages currently enjoyed by users of NXP's existing 8-bit and 16-bit MCU families. Like the MC9S12XS-Family, the MC9S12G-Family run 16-bit wide accesses without wait states for all peripherals and memories. The MC9S12G-Family is available in 100-pin LQFP, 64-pin LQFP, 48-pin LQFP/QFN, 32-pin LQFP and 20-pin TSSOP package options and aims to maximize the amount of functionality especially for the lower pin count packages. In addition to the I/O ports available in each module, further I/O ports are available with interrupt capability allowing wake-up from stop or wait modes.

1.2 Features

This section describes the key features of the MC9S12G-Family.

1.2.1 MC9S12G-Family Comparison

Table 1-1 provides a summary of different members of the MC9S12G-Family and their features. This information is intended to provide an understanding of the range of functionality offered by this microcontroller family.

Table 1-1. MC9S12G-Family Overview[1]

Feature	S12GN16	S12GNA16	S12GN32	S12GNA32	S12GN48	S12G48	S12GA48	S12G64	S12GA64	S12G96	S12GA96	S12G128	S12GA128	S12G192	S12GA192	S12G240	S12GA240
CPU	CPU12V1																
Flash memory [kBytes]	16	16	32	32	48	48	48	64	64	96	96	128	128	192	192	240	240
EEPROM [kBytes]	0.5	0.5	1	1	1.5	1.5	1.5	2	2	3	3	4	4	4	4	4	4
RAM [kBytes]	1	1	2	2	4	4	4	4	4	8	8	8	8	11	11	11	11
MSCAN	—	—	—	—	—	1	1	1	1	1	1	1	1	1	1	1	1
SCI	1	1	1	1	2	2	2	2	2	3	3	3	3	3	3	3	3
SPI	1	1	1	1	2	2	2	2	2	3	3	3	3	3	3	3	3
16-Bit Timer channels	6	6	6	6	6	6	6	6	6	8	8	8	8	8	8	8	8
8-Bit PWM channels	6	6	6	6	6	6	6	6	6	8	8	8	8	8	8	8	8
10-Bit ADC channels	8	—	8	—	12	12	—	12	—	12	—	12	—	16	—	16	—
12-Bit ADC channels	—	8	—	8	—	—	12	—	12	—	12	—	12	—	16	—	16
Temperature Sensor	—	—	—	—	—	—	—	—	—	—	—	—	—	—	Yes	—	Yes
RVA	—	—	—	—	—	—	—	—	—	—	—	—	—	—	YES	—	YES
8-Bit DAC	—	—	—	—	—	—	—	—	—	—	—	—	—	—	2	—	2

Table 1-1. MC9S12G-Family Overview[1]

Feature	S12GN16	S12GNA16	S12GN32	S12GNA32	S12GN48	S12G48	S12GA48	S12G64	S12GA64	S12G96	S12GA96	S12G128	S12GA128	S12G192	S12GA192	S12G240	S12GA240
ACMP (analog comparator)	1	1	1	1	1	1	1	1	1	—	—	—	—	—	—	—	—
PLL	Yes	Yes	Yes	Yes	Yes	Yes	Yes	Yes	Yes	Yes	Yes	Yes	Yes	Yes	Yes	Yes	Yes
External osc	Yes	Yes	Yes	Yes	Yes	Yes	Yes	Yes	Yes	Yes	Yes	Yes	Yes	Yes	Yes	Yes	Yes
Internal 1 MHz RC oscillator	Yes	Yes	Yes	Yes	Yes	Yes	Yes	Yes	Yes	Yes	Yes	Yes	Yes	Yes	Yes	Yes	Yes
20-pin TSSOP	Yes	—	Yes	—	—	—	—	—	—	—	—	—	—	—	—	—	—
32-pin LQFP	Yes	—	Yes	—	Yes	Yes	—	Yes	—	—	—	—	—	—	—	—	—
48-pin LQFP	Yes	Yes	Yes	Yes	Yes	Yes	Yes	Yes	Yes	Yes	Yes	Yes	Yes	Yes	Yes	Yes	Yes
48-pin QFN	Yes	Yes	Yes	Yes	—	—	—	—	—	—	—	—	—	—	—	—	—
64-pin LQFP	—	—	—	—	Yes	Yes	Yes	Yes	Yes	Yes	Yes	Yes	Yes	Yes	Yes	Yes	Yes
100-pin LQFP	—	—	—	—	—	—	—	—	—	Yes	Yes	Yes	Yes	Yes	Yes	Yes	Yes
KGD	—	—	—	—	—	—	—	—	—	—	—	—	—	—	Yes	—	Yes
Supply voltage	3.13 V – 5.5 V																
Execution speed	Static – 25 MHz																

[1] Not all peripherals are available in all package types

Table 1-2shows the maximum number of peripherals or peripheral channels per package type. Not all peripherals are available at the same time. The maximum number of peripherals is also limited by the device chosen as per Table 1-1.

Table 1-2. Maximum Peripheral Availability per Package

Peripheral	20 TSSOP	32 LQFP	48 QFN	48 LQFP	64 LQFP	100 LQFP	KGD (Die)
MSCAN	—	Yes	—	Yes	Yes	Yes	Yes
SCI0	Yes	Yes	Yes	Yes	Yes	Yes	Yes
SCI1	—	Yes	Yes	Yes	Yes	Yes	Yes
SCI2	—	—	—	Yes	Yes	Yes	Yes
SPI0	Yes	Yes	Yes	Yes	Yes	Yes	Yes
SPI1	—	—	—	Yes	Yes	Yes	Yes
SPI2	—	—	—	—	Yes	Yes	Yes
Timer Channels	4 = 0 … 3	6 = 0 … 5	6 = 0 … 5	8 = 0 … 7	8 = 0 … 7	8 = 0 … 7	8 = 0 … 7
8-Bit PWM Channels	4 = 0 … 3	6 = 0 … 5	6 = 0 … 5	8 = 0 … 7	8 = 0 … 7	8 = 0 … 7	8 = 0 … 7
ADC channels	6 = 0 … 5	8 = 0 … 7	8 = 0 … 7	12 = 0 … 11	16 = 0 … 15	16 = 0 … 15	16 = 0 … 15

Table 1-2. Maximum Peripheral Availability per Package

Peripheral	20 TSSOP	32 LQFP	48 QFN	48 LQFP	64 LQFP	100 LQFP	KGD (Die)
DAC0	—	—	—	Yes	Yes	Yes	Yes
DAC1	—	—	—	Yes	Yes	Yes	Yes
ACMP	Yes	Yes	Yes	Yes	Yes	—	—
Total GPIO	14	26	40	40	54	86	86

1.2.2 Chip-Level Features

On-chip modules available within the family include the following features:

- S12 CPU core
- Up to 240 Kbyte on-chip flash with ECC
- Up to 4 Kbyte EEPROM with ECC
- Up to 11 Kbyte on-chip SRAM
- Phase locked loop (IPLL) frequency multiplier with internal filter
- 4–16 MHz amplitude controlled Pierce oscillator
- 1 MHz internal RC oscillator
- Timer module (TIM) supporting up to eight channels that provide a range of 16-bit input capture, output compare, counter, and pulse accumulator functions
- Pulse width modulation (PWM) module with up to eight x 8-bit channels
- Up to 16-channel, 10 or 12-bit resolution successive approximation analog-to-digital converter (ADC)
- Up to two 8-bit digital-to-analog converters (DAC)
- Up to one 5V analog comparator (ACMP)
- Up to three serial peripheral interface (SPI) modules
- Up to three serial communication interface (SCI) modules supporting LIN communications
- Up to one multi-scalable controller area network (MSCAN) module (supporting CAN protocol 2.0A/B)
- On-chip voltage regulator (VREG) for regulation of input supply and all internal voltages
- Autonomous periodic interrupt (API)
- Precision fixed voltage reference for ADC conversions
- Optional reference voltage attenuator module to increase ADC accuracy

1.3 Module Features

The following sections provide more details of the modules implemented on the MC9S12G-Family family.

1.3.1 S12 16-Bit Central Processor Unit (CPU)

S12 CPU is a high-speed 16-bit processing unit:

- Full 16-bit data paths supports efficient arithmetic operation and high-speed math execution
- Includes many single-byte instructions. This allows much more efficient use of ROM space.
- Extensive set of indexed addressing capabilities, including:
  - Using the stack pointer as an indexing register in all indexed operations
  - Using the program counter as an indexing register in all but auto increment/decrement mode
  - Accumulator offsets using A, B, or D accumulators
  - Automatic index predecrement, preincrement, postdecrement, and postincrement (by –8 to +8)

1.3.2 On-Chip Flash with ECC

On-chip flash memory on the MC9S12G-Family family features the following:

- Up to 240 Kbyte of program flash memory
  - 32 data bits plus 7 syndrome ECC (error correction code) bits allow single bit error correction and double fault detection
  - Erase sector size 512 bytes
  - Automated program and erase algorithm
  - User margin level setting for reads
  - Protection scheme to prevent accidental program or erase
- Up to 4 Kbyte EEPROM
  - 16 data bits plus 6 syndrome ECC (error correction code) bits allow single bit error correction and double fault detection
  - Erase sector size 4 bytes
  - Automated program and erase algorithm
  - User margin level setting for reads

1.3.3 On-Chip SRAM

- Up to 11 Kbytes of general-purpose RAM

1.3.4 Port Integration Module (PIM)

- Data registers and data direction registers for ports A, B, C, D, E, T, S, M, P, J and AD when used as general-purpose I/O
- Control registers to enable/disable pull devices and select pullups/pulldowns on ports T, S, M, P, J and AD on per-pin basis
- Single control register to enable/disable pull devices on ports A, B, C, D and E, on per-port basis and on BKGD pin
- Control registers to enable/disable open-drain (wired-or) mode on ports S and M

- Interrupt flag register for pin interrupts on ports P, J and AD
- Control register to configure $\overline{\text{IRQ}}$ pin operation
- Routing register to support programmable signal redirection in 20 TSSOP only
- Routing register to support programmable signal redirection in 100 LQFP package only
- Package code register preset by factory related to package in use, writable once after reset. Also includes bit to reprogram routing of API_EXTCLK in all packages.
- Control register for free-running clock outputs
-

1.3.5 Main External Oscillator (XOSCLCP)

- Loop control Pierce oscillator using a 4 MHz to 16 MHz crystal
  - Current gain control on amplitude output
  - Signal with low harmonic distortion
  - Low power
  - Good noise immunity
  - Eliminates need for external current limiting resistor
  - Transconductance sized for optimum start-up margin for typical crystals
  - Oscillator pins can be shared w/ GPIO functionality

1.3.6 Internal RC Oscillator (IRC)

- Trimmable internal reference clock.
  - Frequency: 1 MHz
  - Trimmed accuracy over –40°C to +125°C ambient temperature range:
    ±1.0% for temperature option C and V (see Table A-4)
    ±1.3% for temperature option M (see Table A-4)

1.3.7 Internal Phase-Locked Loop (IPLL)

- Phase-locked-loop clock frequency multiplier
  - No external components required
  - Reference divider and multiplier allow large variety of clock rates
  - Automatic bandwidth control mode for low-jitter operation
  - Automatic frequency lock detector
  - Configurable option to spread spectrum for reduced EMC radiation (frequency modulation)
  - Reference clock sources:
    - External 4–16 MHz resonator/crystal (XOSCLCP)
    - Internal 1 MHz RC oscillator (IRC)

1.3.8 System Integrity Support

- Power-on reset (POR)
- System reset generation
- Illegal address detection with reset
- Low-voltage detection with interrupt or reset
- Real time interrupt (RTI)
- Computer operating properly (COP) watchdog
  - Configurable as window COP for enhanced failure detection
  - Initialized out of reset using option bits located in flash memory
- Clock monitor supervising the correct function of the oscillator

1.3.9 Timer (TIM)

- Up to eight x 16-bit channels for input capture or output compare
- 16-bit free-running counter with 7-bit precision prescaler
- In case of eight channel timer Version an additional 16-bit pulse accumulator is available

1.3.10 Pulse Width Modulation Module (PWM)

- Up to eight channel x 8-bit or up to four channel x 16-bit pulse width modulator
  - Programmable period and duty cycle per channel
  - Center-aligned or left-aligned outputs
  - Programmable clock select logic with a wide range of frequencies

1.3.11 Controller Area Network Module (MSCAN)

- 1 Mbit per second, CAN 2.0 A, B software compatible
  - Standard and extended data frames
  - 0–8 bytes data length
  - Programmable bit rate up to 1 Mbps
- Five receive buffers with FIFO storage scheme
- Three transmit buffers with internal prioritization
- Flexible identifier acceptance filter programmable as:
  - 2 x 32-bit
  - 4 x 16-bit
  - 8 x 8-bit
- Wakeup with integrated low pass filter option
- Loop back for self test
- Listen-only mode to monitor CAN bus

- Bus-off recovery by software intervention or automatically
- 16-bit time stamp of transmitted/received messages

1.3.12 Serial Communication Interface Module (SCI)

- Up to three SCI modules
- Full-duplex or single-wire operation
- Standard mark/space non-return-to-zero (NRZ) format
- Selectable IrDA 1.4 return-to-zero-inverted (RZI) format with programmable pulse widths
- 13-bit baud rate selection
- Programmable character length
- Programmable polarity for transmitter and receiver
- Active edge receive wakeup
- Break detect and transmit collision detect supporting LIN 1.3, 2.0, 2.1 and SAE J2602

1.3.13 Serial Peripheral Interface Module (SPI)

- Up to three SPI modules
- Configurable 8- or 16-bit data size
- Full-duplex or single-wire bidirectional
- Double-buffered transmit and receive
- Master or slave mode
- MSB-first or LSB-first shifting
- Serial clock phase and polarity options

1.3.14 Analog-to-Digital Converter Module (ADC)

Up to 16-channel, 10-bit/12-bit[1] analog-to-digital converter

- 3 us conversion time
- 8-/10[1]-bit resolution
- Left or right justified result data
- Wakeup from low power modes on analog comparison > or <= match
- Continuous conversion mode
- External triggers to initiate conversions via GPIO or peripheral outputs such as PWM or TIM
- Multiple channel scans
- Precision fixed voltage reference for ADC conversions
-

- Pins can also be used as digital I/O including wakeup capability

1. 12-bit resolution only available on S12GA192 and S12GA240 devices.

1.3.15 Reference Voltage Attenuator (RVA)

- Attenuation of ADC reference voltage with low long-term drift

1.3.16 Digital-to-Analog Converter Module (DAC)

- 1 digital-analog converter channel (per module) with:
  - 8 bit resolution
  - full and reduced output voltage range
  - buffered or unbuffered analog output voltage usable
- operational amplifier stand alone usable

1.3.17 Analog Comparator (ACMP)

- Low offset, low long-term offset drift
- Selectable interrupt on rising, falling, or rising and falling edges of comparator output
- Option to output comparator signal on an external pin
- Option to trigger timer input capture events

1.3.18 On-Chip Voltage Regulator (VREG)

- Linear voltage regulator with bandgap reference
- Low-voltage detect (LVD) with low-voltage interrupt (LVI)
- Power-on reset (POR) circuit
- Low-voltage reset (LVR)

1.3.19 Background Debug (BDM)

- Non-intrusive memory access commands
- Supports in-circuit programming of on-chip nonvolatile memory

1.3.20 Debugger (DBG)

- Trace buffer with depth of 64 entries
- Three comparators (A, B and C)
  - Access address comparisons with optional data comparisons
  - Program counter comparisons
  - Exact address or address range comparisons
- Two types of comparator matches
  - Tagged This matches just before a specific instruction begins execution
  - Force This is valid on the first instruction boundary after a match occurs
- Four trace modes

- Four stage state sequencer

1.4 Key Performance Parameters

The key performance parameters of S12G devices feature:

- Continuous Operating voltage of 3.15 V to 5.5 V
- Operating temperature (T_A) of –40°C to 125°C
- Junction temperature (T_J) of up to 150°C
- Bus frequency (f_{Bus}) of dc to 25 MHz
- Packaging:
  - 100-pin LQFP, 0.5 mm pitch, 14 mm x 14 mm outline
  - 64-pin LQFP, 0.5 mm pitch, 10 mm x 10 mm outline
  - 48-pin LQFP, 0.5 mm pitch, 7 mm x 7 mm outline
  - 48-pin QFN, 0.5 mm pitch, 7 mm x 7 mm outline
  - 32-pin LQFP, 0.8 mm pitch, 7 mm x 7 mm outline
  - 20 TSSOP, 0.65 mm pitch, 4.4 mm x 6.5 mm outline
  - Known good die (KGD), unpackaged

1.5 Block Diagram

Figure 1-1 shows a block diagram of the MC9S12G-Family.

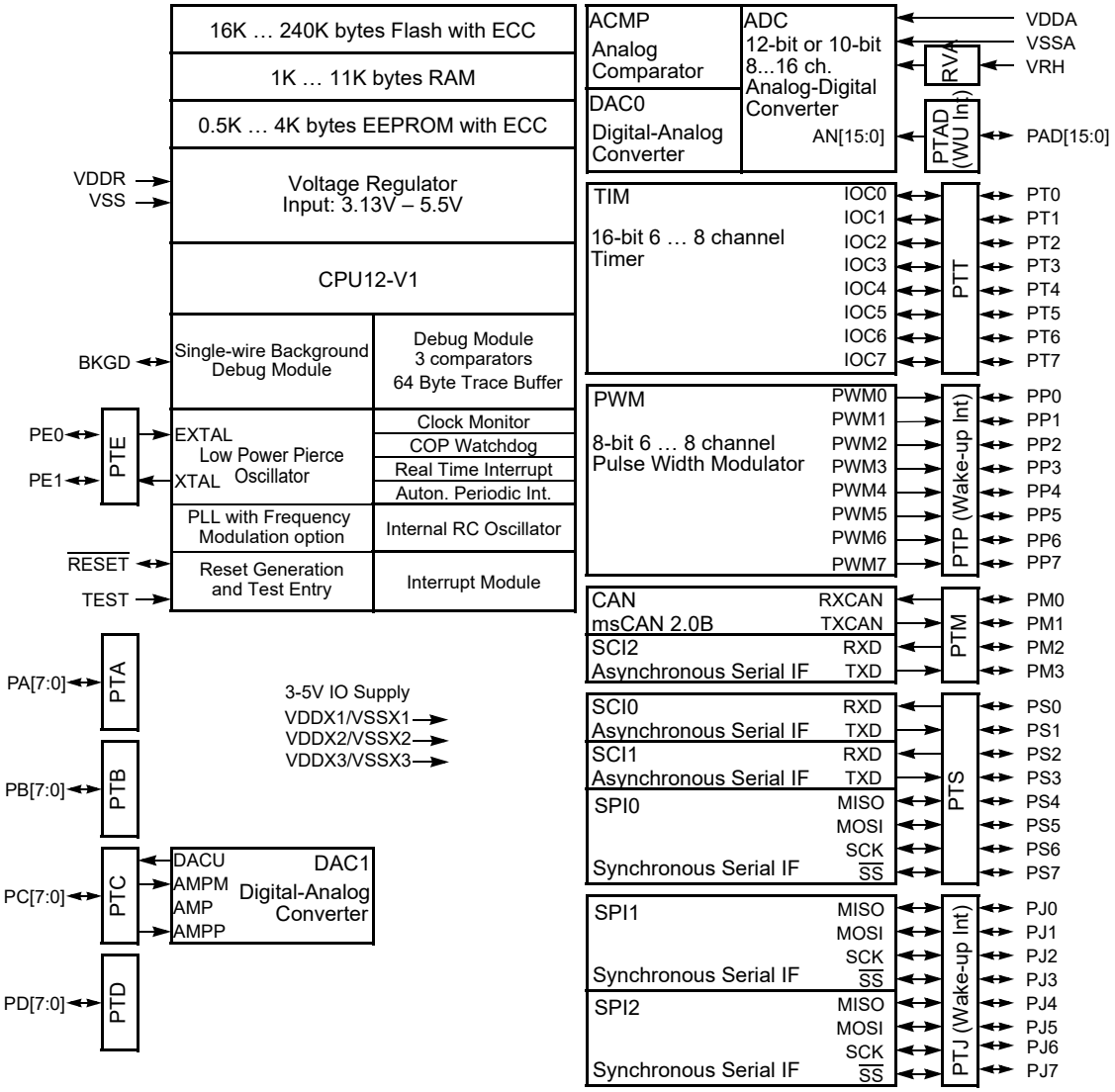

Block Diagram shows the maximum configuration!
Not all pins or all peripherals are available on all devices and packages.
Rerouting options are not shown.

Figure 1-1. MC9S12G-Family Block Diagram

1.6 Family Memory Map

Table 1-3 shows the MC9S12G-Family register memory map.

Table 1-3. Device Register Memory Map

Address	Module	Size (Bytes)
0x0000–0x0009	PIM (Port Integration Module)	10

Address	Module	Size (Bytes)
0x000A–0x000B	MMC (Memory Map Control)	2
0x000C–0x000D	PIM (Port Integration Module)	2
0x000E–0x000F	Reserved	2
0x0010–0x0017	MMC (Memory Map Control)	8
0x0018–0x0019	Reserved	2
0x001A–0x001B	Device ID register	2
0x001C–0x001F	PIM (Port Integration Module)	4
0x0020–0x002F	DBG (Debug Module)	16
0x0030–0x0033	Reserved	4
0x0034–0x003F	CPMU (Clock and Power Management)	12
0x0040–0x006F	TIM (Timer Module <= 8 channels)	48
0x0070–0x009F	ADC (Analog to Digital Converter <= 16 channels)	48
0x00A0–0x00C7	PWM (Pulse-Width Modulator <= 8 channels)	40
0x00C8–0x00CF	SCI0 (Serial Communication Interface)	8
0x00D0–0x00D7	SCI1 (Serial Communication Interface)[1]	8
0x00D8–0x00DF	SPI0 (Serial Peripheral Interface)	8
0x00E0–0x00E7	Reserved	8
0x00E8–0x00EF	SCI2 (Serial Communication Interface)[2]	8
0x00F0–0x00F7	SPI1 (Serial Peripheral Interface)[3]	8
0x00F8–0x00FF	SPI2 (Serial Peripheral Interface)[4]	8
0x0100–0x0113	FTMRG control registers	20
0x0114–0x011F	Reserved	12
0x0120	INT (Interrupt Module)	1
0x0121–0x013F	Reserved	31
0x0140–0x017F	CAN[5]	64
0x0180–0x023F	Reserved	192
0x0240–0x025F	PIM (Port Integration Module)	32
0x0260–0x0261	ACMP (Analog Comparator)[6]	2
0x0262–0x0275	PIM (Port Integration Module)	20
0x0276	RVA (Reference Voltage Attenuator)[7]	1
0x0277–0x027F	PIM (Port Integration Module)	9
0x0280–0x02EF	Reserved	112
0x02F0–0x02FF	CPMU (Clock and Power Management)	16
0x0300–0x03BF	Reserved	192
0x03C0–0x03C7	DAC0 (Digital to Analog Converter)[8]	8

Address	Module	Size (Bytes)
0x03C8–0x03CF	DAC1 (Digital to Analog Converter)[8]	8
0x03D0–0x03FF	Reserved	48

1 The SCI1 is not available on the S12GN8, S12GN16, S12GN32, and S12GN32 devices
2 The SCI2 is not available on the S12GN8, S12GN16, S12GN32, S12GN32, S12G48, and S12G64 devices
3 The SPI1 is not available on the S12GN8, S12GN16, S12GN24, and S12GN32 devices
4 The SPI2 is not available on the S12GN8, S12GN16, S12GN32, S12GN32, S12G48, and S12G64 devices
5 The CAN is not available on the S12GN8, S12GN16, S12GN24, S12GN32, and S12GN48 devices
6 The ACMP is only available on the S12GN8, S12GN16, S12GN24, S12GN32, S12GN48,S12GN48, S12G48, and S12G64 devices
7 The RVA is only available on the S12GA192 and S12GA240 devices
8 DAC0 and DAC1 are only available on the S12GA192 and S12GA240 devices

NOTE

Reserved register space shown in Table 1-3 is not allocated to any module. This register space is reserved for future use. Writing to these locations has no effect. Read access to these locations returns zero.

Figure 1-2 shows S12G CPU and BDM local address translation to the global memory map as a graphical representation. In conjunction Table 1-4 shows the address ranges and mapping to 256K global memory space for P-Flash, EEPROM and RAM. The whole 256K global memory space is visible through the P-Flash window located in the 64k local memory map located at 0x8000 - 0xBFFF using the PPAGE register.

Table 1-4. MC9S12G-Family Memory Parameters

Feature	S12GN16	S12GN32	S12G48 S12GN48	S12G64	S12G96	S12G128	S12G192 S12GA192	S12G240 S12GA240
P-Flash size	16KB	32KB	48KB	64KB	96KB	128KB	192KB	240KB
PF_LOW	0x3C000	0x38000	0x34000	0x30000	0x28000	0x20000	0x10000	0x04000
PF_LOW_UNP (unpaged)[1]	0xC000	0x8000	0x4000	—	—	—	—	—
PPAGES	0x0F	0x0E - 0x0F	0x0D - 0x0F	0x0C - 0x0F	0x0A - 0x0F	0x08 - 0x0F	0x04 - 0x0F	0x01 - 0x0F
EEPROM [Bytes]	512	1024	1536	2048	3072	4096	4096	4096
EEPROM_HI	0x05FF	0x07FF	0x09FF	0x0BFF	0x0FFF	0x13FF	0x13FF	0x13FF

Table 1-4. MC9S12G-Family Memory Parameters

Feature	S12GN16	S12GN32	S12G48 S12GN48	S12G64	S12G96	S12G128	S12G192 S12GA192	S12G240 S12GA240
RAM [Bytes]	1024	2048	4096	4096	8192	8192	11264	11264
RAM_LOW	0x3C00	0x3800	0x3000	0x3000	0x2000	0x2000	0x1400	0x1400
Unpaged Flash space left[2]	—	—	—	0x0C00-0x2FFF	0x1000-0x1FFF	0x1400-0x1FFF	—	—
Unpaged Flash[2]	—	—	—	9KB	4KB	3KB	—	—

1 While for memory sizes <64K the whole 256k space could be addressed using the PPAGE, it is more efficient to use an unpaged memory model

2 Page 0xC

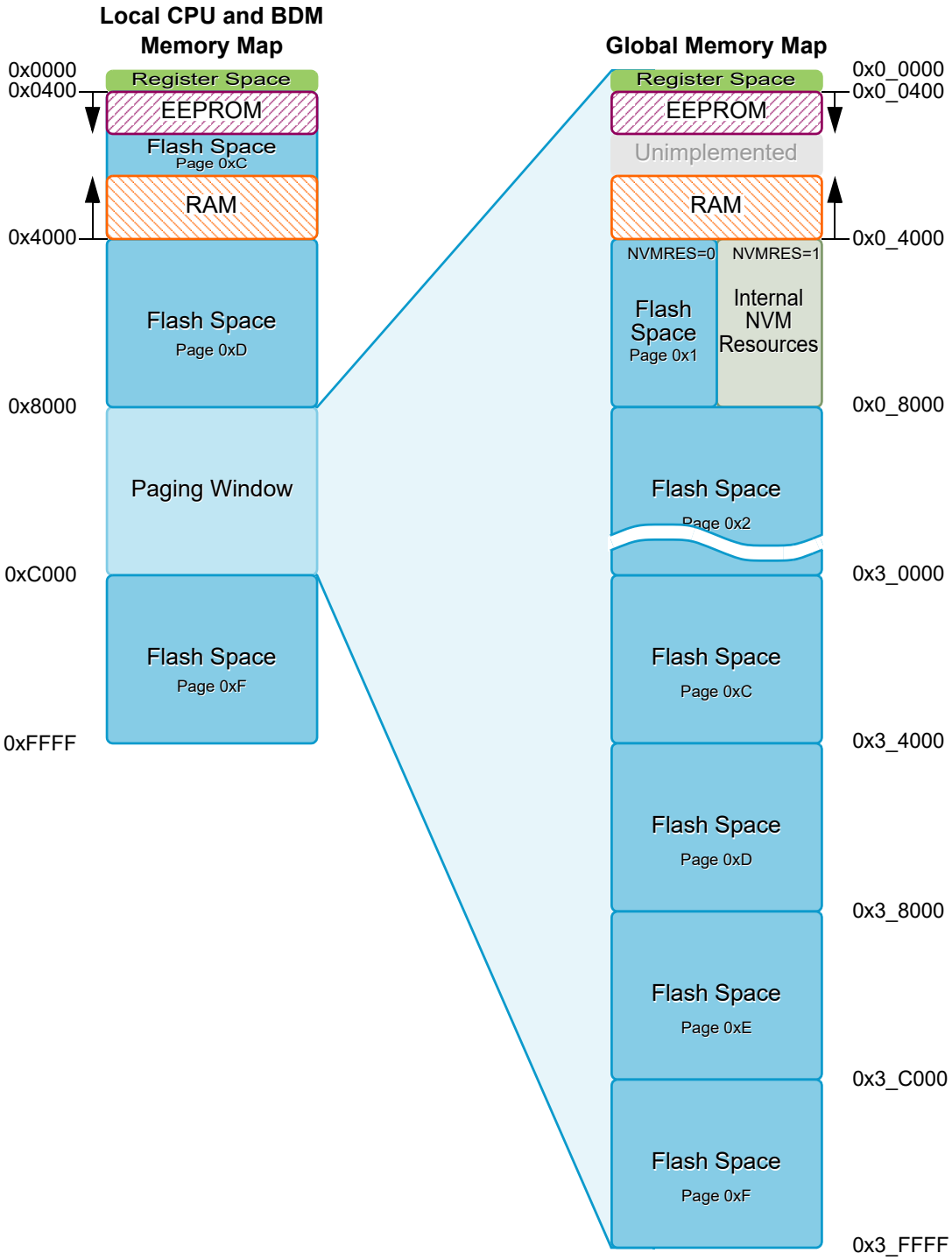

Figure 1-2. MC9S12G Global Memory Map

1.6.1 Part ID Assignments

The part ID is located in two 8-bit registers PARTIDH and PARTIDL (addresses 0x001A and 0x001B). The read-only value is a unique part ID for each revision of the chip. Table 1-5 shows the assigned part ID number and Mask Set number.

Table 1-5. Assigned Part ID Numbers

Device	Mask Set Number	Part ID
MC9S12GA240	0N95B	0xF080
MC9S12G240	0N95B	0xF080
MC9S12GA192	0N95B	0xF080
MC9S12G192	0N95B	0xF080
MC9S12GA128	0N51A	0xF180
	0N42V	0xF180
MC9S12G128	0N51A	0xF180
	0N42V	0xF180
MC9S12GA96	0N51A	0xF180
	0N42V	0xF180
MC9S12G96	0N51A	0xF180
	0N42V	0xF180
MC9S12GA64	0N75C	0xF280
	0N55V	0xF280
MC9S12G64	0N75C[1]	0xF280[1]
	0N55V[1]	0xF280[1]
	1N75C[2]	0xF281[2]
	1N55V[2]	0xF281[2]
MC9S12GA48	0N75C	0xF280
	0N55V	0xF280
MC9S12G48	0N75C[1]	0xF280[1]
	0N55V[1]	0xF280[1]
	1N75C[2]	0xF281[2]
	1N55V[2]	0xF281[2]
MC9S12GN48	0N75C[1]	0xF280[1]
	0N55V[1]	0xF280[1]
	1N75C[2]	0xF281[2]
	1N55V[2]	0xF281[2]
MC9S12GNA32	0N48A	0xF380
	0N57V	0xF380
MC9S12GN32	0N48A[3]	0xF380[3]
	0N57V[3]	0xF380[3]
	1N48A[4]	0xF381[4]
	1N57V[4]	0xF381[4]

Table 1-5. Assigned Part ID Numbers

Device	Mask Set Number	Part ID
MC9S12GNA16	0N48A	0xF380
	0N57V	0xF380
MC9S12GN16	0N48A[3]	0xF380[3]
	0N57V[3]	0xF380[3]
	1N48A[4]	0xF381[4]
	1N57V[4]	0xF381[4]

1 Only available in 48-pin LQFP and 64-pin LQFP
2 Only available in 32-pin LQFP
3 Only available in 48-pin LQFP and 48-pin QFN
4 Only available in 20-pin TSSOP and 32-pin LQFP

1.7 Signal Description and Device Pinouts

This section describes signals that connect off-chip. It includes a pinout diagram, a table of signal properties, and detailed discussion of signals. It is built from the signal description sections of the individual IP blocks on the device.

1.7.1 Pin Assignment Overview

Table 1-6 provides a summary of which ports are available for each package option.

Table 1-6. Port Availability by Package Option

Port	20 TSSOP	32 LQFP	48 LQFP 48 QFN	64 LQFP	100 LQFP	KGD (Die)
Port AD/ADC Channels	6	8	12	16	16	16
Port A pins	0	0	0	0	8	8
Port B pins	0	0	0	0	8	8
Port C pins	0	0	0	0	8	8
Port D pins	0	0	0	0	8	8
Port E pins	2	2	2	2	2	2
Port J	0	0	4	8	8	8
Port M	0	2	2	4	4	4
Port P	0	4	6	8	8	8
Port S	4	6	8	8	8	8
Port T	2	4	6	8	8	8

Table 1-6. Port Availability by Package Option

Port	20 TSSOP	32 LQFP	48 LQFP 48 QFN	64 LQFP	100 LQFP	KGD (Die)
Sum of Ports	14	26	40	54	86	86
I/O Power Pairs VDDX/VSSX	1/1	1/1	1/1	1/1	3/3	3/3

NOTE

To avoid current drawn from floating inputs, the input buffers of all non-bonded pins are disabled.

1.7.2 Detailed Signal Descriptions

This section describes the signal properties. The relation between signals and package pins is described in section 1.8 Device Pinouts.

1.7.2.1 $\overline{\text{RESET}}$ — External Reset Signal

The $\overline{\text{RESET}}$ signal is an active low bidirectional control signal. It acts as an input to initialize the MCU to a known start-up state, and an output when an internal MCU function causes a reset. The $\overline{\text{RESET}}$ pin has an internal pull-up device.

1.7.2.2 TEST — Test Pin

This input only pin is reserved for factory test. This pin has an internal pull-down device.

NOTE

The TEST pin must be tied to ground in all applications.

1.7.2.3 BKGD / MODC — Background Debug and Mode Pin

The BKGD/MODC pin is used as a pseudo-open-drain pin for the background debug communication. It is used as a MCU operating mode select pin during reset. The state of this pin is latched to the MODC bit at the rising edge of $\overline{\text{RESET}}$. The BKGD pin has an internal pull-up device.

1.7.2.4 EXTAL, XTAL — Oscillator Signal

EXTAL and XTAL are the crystal driver and external clock signals. On reset all the device clocks are derived from the internal reference clock. XTAL is the oscillator output.

1.7.2.5 PAD[15:0] / KWAD[15:0] — Port AD Input Pins of ADC

PAD[15:0] are general-purpose input or output signals. These signals can have a pull-up or pull-down device selected and enabled on per signal basis. Out of reset the pull devices are disabled.

1.7.2.6 PA[7:0] — Port A I/O Signals

PA[7:0] are general-purpose input or output signals. The signals can have pull-up devices, enabled by a single control bit for this signal group. Out of reset the pull-up devices are disabled .

1.7.2.7 PB[7:0] — Port B I/O Signals

PB[7:0] are general-purpose input or output signals. The signals can have pull-up devices, enabled by a single control bit for this signal group. Out of reset the pull-up devices are disabled .

1.7.2.8 PC[7:0] — Port C I/O Signals

PC[7:0] are general-purpose input or output signals. The signals can have pull-up devices, enabled by a single control bit for this signal group. Out of reset the pull-up devices are disabled .

1.7.2.9 PD[7:0] — Port D I/O Signals

PD[7:0] are general-purpose input or output signals. The signals can have pull-up device, enabled by a single control bit for this signal group. Out of reset the pull-up devices are disabled.

1.7.2.10 PE[1:0] — Port E I/O Signals

PE[1:0] are general-purpose input or output signals. The signals can have pull-down device, enabled by a single control bit for this signal group. Out of reset the pull-down devices are enabled.

1.7.2.11 PJ[7:0] / KWJ[7:0] — Port J I/O Signals

PJ[7:0] are general-purpose input or output signals. The signals can be configured on per signal basis as interrupt inputs with wakeup capability (KWJ[7:0]). They can have a pull-up or pull-down device selected and enabled on per signal basis. Out of reset the pull devices are enabled .

1.7.2.12 PM[3:0] — Port M I/O Signals

PM[3:0] are general-purpose input or output signals. They can have a pull-up or pull-down device selected and enabled on per signal basis. Out of reset the pull devices are disabled. The signals can be configured on per pin basis to open-drain mode.

1.7.2.13 PP[7:0] / KWP[7:0] — Port P I/O Signals

PP[7:0] are general-purpose input or output signals. The signals can be configured on per signal basis as interrupt inputs with wakeup capability (KWP[7:0]). They can have a pull-up or pull-down device selected and enabled on per signal basis. Out of reset the pull devices are disabled .

1.7.2.14 PS[7:0] — Port S I/O Signals

PS[7:0] are general-purpose input or output signals. They can have a pull-up or pull-down device selected and enabled on per signal basis. Out of reset the pull-up devices are enabled. The signals can be configured on per pin basis in open-drain mode.

1.7.2.15 PT[7:0] — Port TI/O Signals

PT[7:0] are general-purpose input or output signals. They can have a pull-up or pull-down device selected and enabled on per signal basis. Out of reset the pull devices are disabled .

1.7.2.16 AN[15:0] — ADC Input Signals

AN[15:0] are the analog inputs of the Analog-to-Digital Converter.

1.7.2.17 ACMP Signals

1.7.2.17.1 ACMPP — Non-Inverting Analog Comparator Input

ACMPP is the non-inverting input of the analog comparator.

1.7.2.17.2 ACMPM — Inverting Analog Comparator Input

ACMPM is the inverting input of the analog comparator.

1.7.2.17.3 ACMPO — Analog Comparator Output

ACMPO is the output of the analog comparator.

1.7.2.18 DAC Signals

1.7.2.18.1 DACU[1:0] Output Pins

These analog pins is used for the unbuffered analog output Voltages from the DAC0 and the DAC1 resistor network output, when the according mode is selected.

1.7.2.18.2 AMP[1:0] Output Pins

These analog pins are used for the buffered analog outputs Voltage from the operational amplifier outputs, when the according mode is selected.

1.7.2.18.3 AMPP[1:0] Input Pins

These analog input pins areused as input signals for the operational amplifiers positive input pins when the according mode is selected.

1.7.2.18.4 AMPM[1:0] Input Pins

These analog input pins are used as input signals for the operational amplifiers negative input pin when the according mode is selected.

1.7.2.19 SPI Signals

1.7.2.19.1 SS[2:0] Signals

Those signals are associated with the slave select SS functionality of the serial peripheral interfaces SPI2-0.

1.7.2.19.2 SCK[2:0] Signals

Those signals are associated with the serial clock SCK functionality of the serial peripheral interfaces SPI2-0.

1.7.2.19.3 MISO[2:0] Signals

Those signals are associated with the MISO functionality of the serial peripheral interfaces SPI2-0. They act as master input during master mode or as slave output during slave mode.

1.7.2.19.4 MOSI[2:0] Signals

Those signals are associated with the MOSI functionality of the serial peripheral interfaces SPI2-0. They act as master output during master mode or as slave input during slave mode.

1.7.2.20 SCI Signals

1.7.2.20.1 RXD[2:0] Signals

Those signals are associated with the receive functionality of the serial communication interfaces SCI2-0.

1.7.2.20.2 TXD[2:0] Signals

Those signals are associated with the transmit functionality of the serial communication interfaces SCI2-0.

1.7.2.21 CAN signals

1.7.2.21.1 RXCAN Signal

This signal is associated with the receive functionality of the scalable controller area network controller (MSCAN).

1.7.2.21.2 TXCAN Signal

This signal is associated with the transmit functionality of the scalable controller area network controller (MSCAN).

1.7.2.22 PWM[7:0] Signals

The signals PWM[7:0] are associated with the PWM module outputs.

1.7.2.23 Internal Clock outputs

1.7.2.23.1 ECLK

This signal is associated with the output of the divided bus clock (ECLK).

NOTE

This feature is only intended for debug purposes at room temperature.
It must not be used for clocking external devices in an application.

1.7.2.23.2 ECLKX2

This signal is associated with the output of twice the bus clock (ECLKX2).

NOTE

This feature is only intended for debug purposes at room temperature.
It must not be used for clocking external devices in an application.

1.7.2.23.3 API_EXTCLK

This signal is associated with the output of the API clock (API_EXTCLK).

1.7.2.24 IOC[7:0] Signals

The signals IOC[7:0] are associated with the input capture or output compare functionality of the timer (TIM) module.

1.7.2.25 $\overline{\text{IRQ}}$

This signal is associated with the maskable $\overline{\text{IRQ}}$ interrupt.

1.7.2.26 $\overline{\text{XIRQ}}$

This signal is associated with the non-maskable $\overline{\text{XIRQ}}$ interrupt.

1.7.2.27 ETRIG[3:0]

These signals are inputs to the Analog-to-Digital Converter. Their purpose is to trigger ADC conversions.

1.7.3 Power Supply Pins

MC9S12G power and ground pins are described below. Because fast signal transitions place high, short-duration current demands on the power supply, use bypass capacitors with high-frequency characteristics and place them as close to the MCU as possible.

NOTE

All ground pins must be connected together in the application.

1.7.3.1 VDDX[3:1]/VDDX, VSSX[3:1]/VSSX— Power and Ground Pins for I/O Drivers

External power and ground for I/O drivers. Bypass requirements depend on how heavily the MCU pins are loaded. All VDDX pins are connected together internally. All VSSX pins are connected together internally.

NOTE

Not all VDDX[3:1]/VDDX and VSSX[3:1]VSSX pins are available on all packages. Refer to section 1.8 Device Pinouts for further details.

1.7.3.2 VDDR — Power Pin for Internal Voltage Regulator

Power supply input to the internal voltage regulator.

NOTE

On some packages VDDR is bonded to VDDX and the pin is named VDDXR. Refer to section 1.8 Device Pinouts for further details.

1.7.3.3 VSS — Core Ground Pin

The voltage supply of nominally 1.8V is derived from the internal voltage regulator. The return current path is through the VSS pin.

1.7.3.4 VDDA, VSSA — Power Supply Pins for DAC,ACMP, RVA, ADC and Voltage Regulator

These are the power supply and ground input pins for the digital-to-analog converter, the analog comparator, the reference voltage attenuator, the analog-to-digital converter and the voltage regulator.

NOTE

On some packages VDDA is connected with VDDXR and the common pin is named VDDXRA.
On some packages the VSSA is connected to VSSX and the common pin is named VSSXA. See section Section 1.8, “Device Pinouts” for further details.

1.7.3.5 VRH — Reference Voltage Input Pin

V_{RH} is the reference voltage input pin for the digital-to-analog converter and the analog-to-digital converter. Refer to Section 1.18, “ADC VRH/VRL Signal Connection” for further details.

On some packages VRH is tied to VDDA or VDDXRA. Refer to section 1.8 Device Pinouts for further details.

1.7.3.6 Power and Ground Connection Summary

Table 1-7. Power and Ground Connection Summary

Mnemonic	Nominal Voltage	Description
VDDR	3.15V – 5.0 V	External power supply for internal voltage regulator.
VSS	0V	Return ground for the logic supply generated by the internal regulator
$VDDX_{[3:1]}$	3.15V – 5.0 V	External power supply for I/O drivers. The 100-pin package features 3 I/O supply pins.
$VSSX_{[3:1]}$	0V	Return ground for I/O drivers. The100-pin package provides 3 ground pins
VDDX	3.15V – 5.0 V	External power supply for I/O drivers, All packages except 100-pin feature 1 I/O supply.
VSSX	0V	Return ground for I/O drivers. All packages except 100-pin provide 1 I/O ground pin.
VDDA	3.15V – 5.0 V	External power supply for the analog-to-digital converter and for the reference circuit of the internal voltage regulator.
VSSA	0V	Return ground for VDDA analog supply
VDDXR	3.15V – 5.0 V	External power supply for I/O drivers and internal voltage regulator. For the 48-pin package the VDDX and VDDR supplies are combined on one pin.
VDDXRA	3.15V – 5.0 V	External power supply for I/O drivers, internal voltage regulator and analog-to-digital converter. For the 20- and 32-pin package the VDDX, VDDR and VDDA supplies are combined on one pin.
VSSXA	0V	Return ground for I/O driver and VDDA analog supply
VRH	3.15V – 5.0 V	Reference voltage for the analog-to-digital converter.

1.8 Device Pinouts

1.8.1 S12GN16 and S12GN32

1.8.1.1 Pinout 20-Pin TSSOP

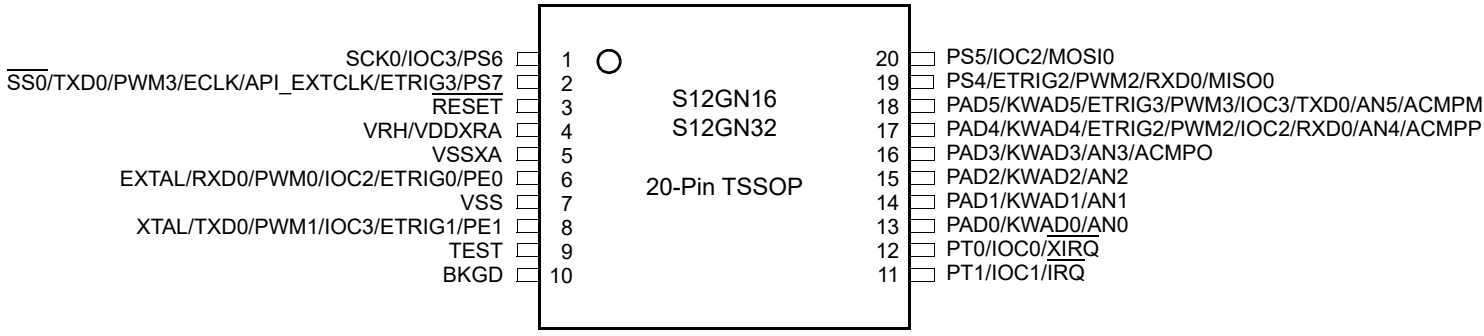

Figure 1-3. 20-Pin TSSOP Pinout for S12GN16 and S12GN32

Table 1-8. 20-Pin TSSOP Pinout for S12GN16 and S12GN32

	Function <----lowest-----PRIORITY-----highest---->								Power Supply	Internal Pull Resistor	
Package Pin	Pin	2nd Func.	3rd Func.	4th Func	5th Func	6th Func	7th Func	8th Func		CTRL	Reset State
1	PS6	IOC3	SCK0	—	—	—	—	—	V_{DDX}	PERS/PPSS	Up
2	PS7	ETRIG3	API_EXTCLK	ECLK	PWM3	TXD0	$\overline{SS0}$	—	V_{DDX}	PERS/PPSS	Up
3	RESET	—	—	—	—	—	—	—	V_{DDX}	PULLUP	
4	VDDXRA	VRH	—	—	—	—	—	—	—	—	—
5	VSSXA	—	—	—	—	—	—	—	—	—	—
6	PE0[1]	ETRIG0	PWM0	IOC2	RXD0	EXTAL	—	—	V_{DDX}	PUCR/PDPEE	Down
7	VSS	—	—	—	—	—	—	—	—	—	—
8	PE1[1]	ETRIG1	PWM1	IOC3	TXD0	XTAL	—	—		PUCR/PDPEE	Down
9	TEST	—	—	—	—	—	—	—	N.A.	$\overline{RESET}$ pin	Down
10	BKGD	MODC	—	—	—	—	—	—	V_{DDX}	Always on	Up
11	PT1	IOC1	$\overline{IRQ}$	—	—	—	—	—	V_{DDX}	PERT/PPST	Disabled
12	PT0	IOC0	$\overline{XIRQ}$	—	—	—	—	—	V_{DDX}	PERT/PPST	Disabled
13	PAD0	KWAD0	AN0	—	—	—	—	—	V_{DDA}	PER1AD/PPS1AD	Disabled
14	PAD1	KWAD1	AN1	—	—	—	—	—	V_{DDA}	PER1AD/PPS1AD	Disabled
15	PAD2	KWAD2	AN2	—	—	—	—	—	V_{DDA}	PER1AD/PPS1AD	Disabled

Table 1-8. 20-Pin TSSOP Pinout for S12GN16 and S12GN32

	Function <----lowest-----PRIORITY-----highest---->								Power Supply	Internal Pull Resistor	
Package Pin	Pin	2nd Func.	3rd Func.	4th Func	5th Func	6th Func	7th Func	8th Func		CTRL	Reset State
16	PAD3	KWAD3	AN3	ACMPO	—	—	—	—	V_{DDA}	PER1AD/PPS1AD	Disabled
17	PAD4	KWAD4	ETRIG2	PWM2	IOC2	RXD0	AN4	ACMPP	V_{DDA}	PER1AD/PPS1AD	Disabled
18	PAD5	KWAD5	ETRIG3	PWM3	IOC3	TXD0	AN5	ACMPM	V_{DDA}	PER1AD/PPS1AD	Disabled
19	PS4	ETRIG2	PWM2	RXD0	MISO0	—	—	—	V_{DDX}	PERS/PPSS	Up
20	PS5	IOC2	MOSI0	—	—	—	—	—	V_{DDX}	PERS/PPSS	Up

[1] The regular I/O characteristics (see Section A.2, “I/O Characteristics”) apply if the EXTAL/XTAL function is disabled

1.8.1.2 Pinout 32-Pin LQFP

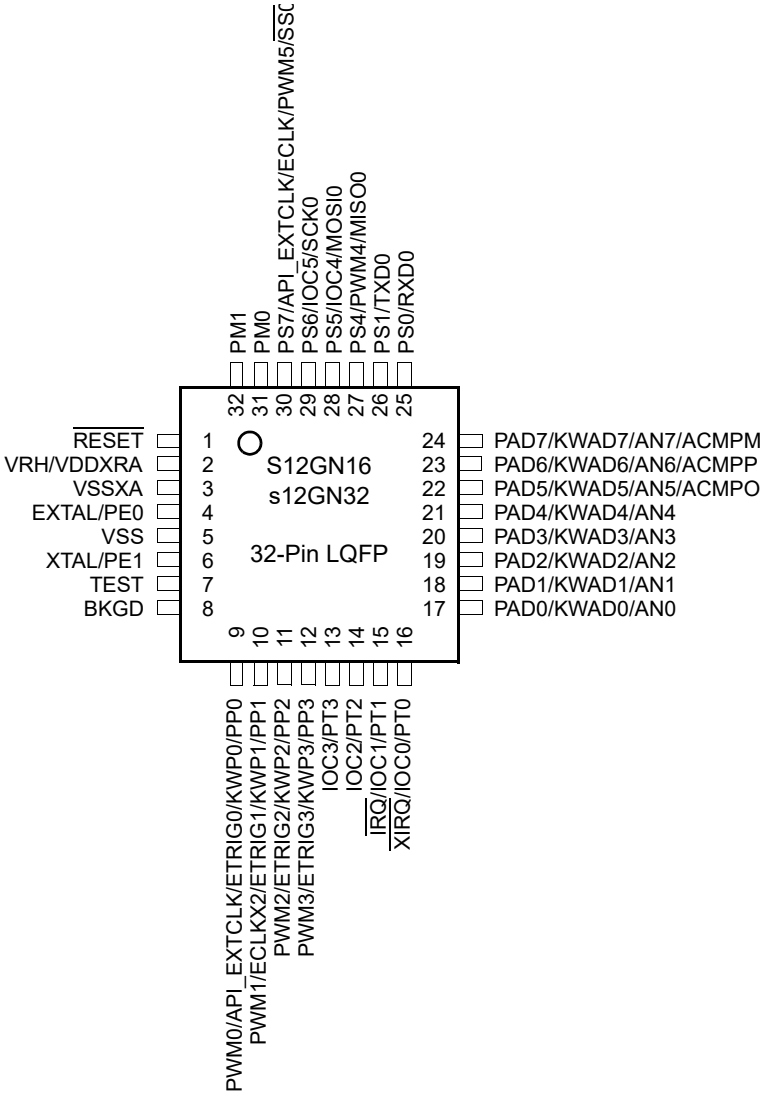

Figure 1-4. 32-Pin LQFP OPinout for S12GN16 and S12GN32

Table 1-9. 32-Pin LQFP OPinout for S12GN16 and S12GN32

	Function <----lowest-----PRIORITY-----highest---->					Power Supply	Internal Pull Resistor	
Package Pin	Pin	2nd Func.	3rd Func.	4th Func	5th Func		CTRL	Reset State
1	RESET	—	—	—	—	V_{DDX}	PULLUP	
2	VDDXRA	VRH	—	—	—	—	—	—
3	VSSXA	—	—	—	—	—	—	—

Table 1-9. 32-Pin LQFP OPinout for S12GN16 and S12GN32

	Function <----lowest-----PRIORITY-----highest---->					Power Supply	Internal Pull Resistor	
Package Pin	Pin	2nd Func.	3rd Func.	4th Func	5th Func		CTRL	Reset State
4	PE0[1]	EXTAL	—	—	—	—	PUCR/PDPEE	Down
5	VSS	—	—	—	—	—	—	—
6	PE1[1]	XTAL	—	—	—	—	PUCR/PDPEE	Down
7	TEST	—	—	—	—	N.A.	$\overline{\text{RESET}}$ pin	Down
8	BKGD	MODC	—	—	—	V_{DDX}	PUCR/BKPUE	Up
9	PP0	KWP0	ETRIG0	API_EXTCLK	PWM0	V_{DDX}	PERP/PPSP	Disabled
10	PP1	KWP1	ETRIG1	ECLKX2	PWM1	V_{DDX}	PERP/PPSP	Disabled
11	PP2	KWP2	ETRIG2	PWM2	—	V_{DDX}	PERP/PPSP	Disabled
12	PP3	KWP3	ETRIG3	PWM3	—	V_{DDX}	PERP/PPSP	Disabled
13	PT3	IOC3	—	—	—	V_{DDX}	PERT/PPST	Disabled
14	PT2	IOC2	—	—	—	V_{DDX}	PERT/PPST	Disabled
15	PT1	IOC1	$\overline{\text{IRQ}}$	—	—	V_{DDX}	PERT/PPST	Disabled
16	PT0	IOC0	$\overline{\text{XIRQ}}$	—	—	V_{DDX}	PERT/PPST	Disabled
17	PAD0	KWAD0	AN0	—	—	V_{DDA}	PER1AD/PPS1AD	Disabled
18	PAD1	KWAD1	AN1	—	—	V_{DDA}	PER1AD/PPS1AD	Disabled
19	PAD2	KWAD2	AN2	—	—	V_{DDA}	PER1AD/PPS1AD	Disabled
20	PAD3	KWAD3	AN3	—	—	V_{DDA}	PER1AD/PPS1AD	Disabled
21	PAD4	KWAD4	AN4	—	—	V_{DDA}	PER1AD/PPS1AD	Disabled
22	PAD5	KWAD5	AN5	ACMPO	—	V_{DDA}	PER1AD/PPS1AD	Disabled
23	PAD6	KWAD6	AN6	ACMPP	—	V_{DDA}	PER1AD/PPS1AD	Disabled
24	PAD7	KWAD7	AN7	ACMPM	—	V_{DDA}	PER1AD/PPS1AD	Disabled
25	PS0	RXD0	—	—	—	V_{DDX}	PERS/PPSS	Up
26	PS1	TXD0	—	—	—	V_{DDX}	PERS/PPSS	Up
27	PS4	PWM4	MISO0	—	—	V_{DDX}	PERS/PPSS	Up
28	PS5	IOC4	MOSI0	—	—	V_{DDX}	PERS/PPSS	Up
29	PS6	IOC5	SCK0	—	—	V_{DDX}	PERS/PPSS	Up
30	PS7	API_EXTCLK	ECLK	PWM5	$\overline{\text{SS0}}$	V_{DDX}	PERS/PPSS	Up
31	PM0	—	—	—	—	V_{DDX}	PERM/PPSM	Disabled

Table 1-9. 32-Pin LQFP OPinout for S12GN16 and S12GN32

	Function <----lowest-----PRIORITY-----highest---->					Power Supply	Internal Pull Resistor	
Package Pin	Pin	2nd Func.	3rd Func.	4th Func	5th Func		CTRL	Reset State
32	PM1	—	—	—	—	V_{DDX}	PERM/PPSM	Disabled

[1] The regular I/O characteristics (see Section A.2, “I/O Characteristics”) apply if the EXTAL/XTAL function is disabled

1.8.1.3 Pinout 48-Pin LQFP/QFN

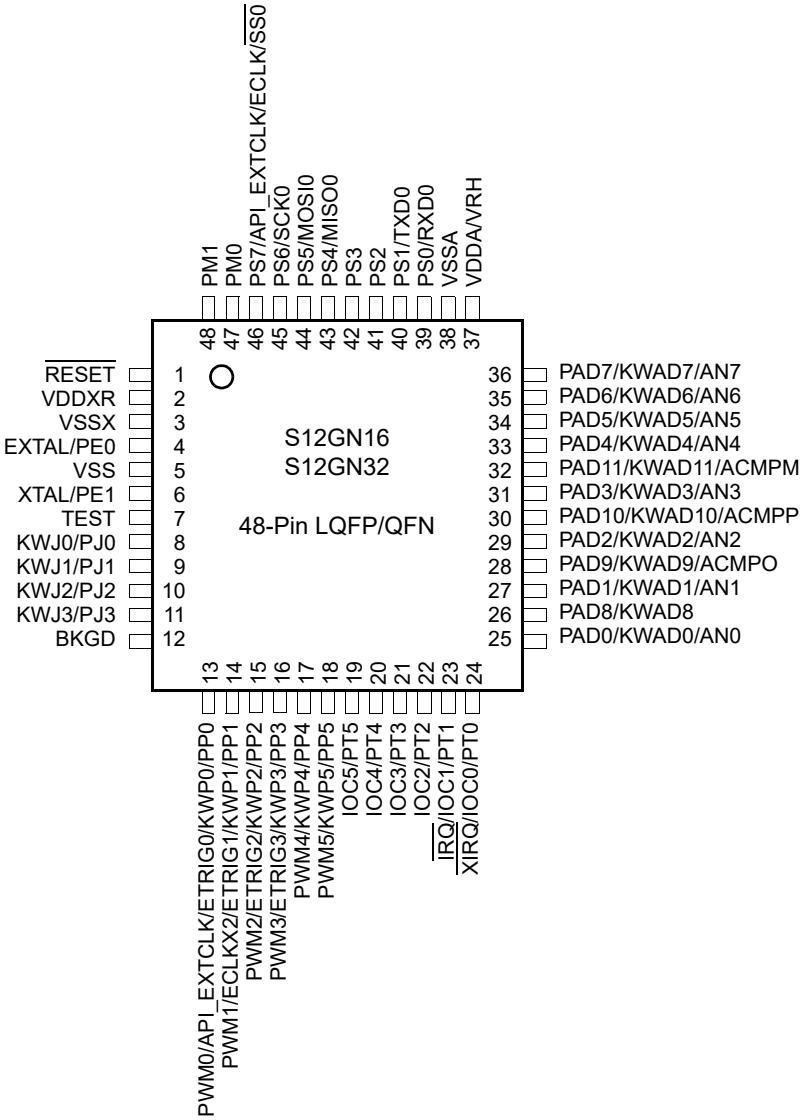

Figure 1-5. 48-Pin LQFP/QFN Pinout for S12GN16 and S12GN32

Table 1-10. 48-Pin LQFP/QFN Pinout for S12GN16 and S12GN32

	Function <----lowest-----PRIORITY-----highest---->					Power Supply	Internal Pull Resistor	
Package Pin	Pin	2nd Func.	3rd Func.	4th Func	5th Func		CTRL	Reset State
1	RESET	—	—	—	—	V_{DDX}	PULLUP	
2	VDDXR	—	—	—	—	—	—	—
3	VSSX	—	—	—	—	—	—	—
4	PE0[1]	EXTAL	—	—	—	V_{DDX}	PUCR/PDPEE	Down
5	VSS	—	—	—	—	—	—	—
6	PE1[1]	XTAL	—	—	—	V_{DDX}	PUCR/PDPEE	Down
7	TEST	—	—	—	—	N.A.	$\overline{\text{RESET}}$ pin	Down
8	PJ0	KWJ0	—	—	—	V_{DDX}	PERJ/PPSJ	Up
9	PJ1	KWJ1	—	—	—	V_{DDX}	PERJ/PPSJ	Up
10	PJ2	KWJ2	—	—	—	V_{DDX}	PERJ/PPSJ	Up
11	PJ3	KWJ3	—	—	—	V_{DDX}	PERJ/PPSJ	Up
12	BKGD	MODC	—	—	—	V_{DDX}	PUCR/BKPUE	Up
13	PP0	KWP0	ETRIG0	API_EXTCLK	PWM0	V_{DDX}	PERP/PPSP	Disabled
14	PP1	KWP1	ETRIG1	ECLKX2	PWM1	V_{DDX}	PERP/PPSP	Disabled
15	PP2	KWP2	ETRIG2	PWM2	—	V_{DDX}	PERP/PPSP	Disabled
16	PP3	KWP3	ETRIG3	PWM3	—	V_{DDX}	PERP/PPSP	Disabled
17	PP4	KWP4	PWM4	—	—	V_{DDX}	PERP/PPSP	Disabled
18	PP5	KWP5	PWM5	—	—	V_{DDX}	PERP/PPSP	Disabled
19	PT5	IOC5	—	—	—	V_{DDX}	PERT/PPST	Disabled
20	PT4	IOC4	—	—	—	V_{DDX}	PERT/PPST	Disabled
21	PT3	IOC3	—	—	—	V_{DDX}	PERT/PPST	Disabled
22	PT2	IOC2	—	—	—	V_{DDX}	PERT/PPST	Disabled
23	PT1	IOC1	$\overline{\text{IRQ}}$	—	—	V_{DDX}	PERT/PPST	Disabled
24	PT0	IOC0	$\overline{\text{XIRQ}}$	—	—	V_{DDX}	PERT/PPST	Disabled
25	PAD0	KWAD0	AN0	—	—	V_{DDA}	PER1AD/PPS1AD	Disabled
26	PAD8	KWAD8	—	—	—	V_{DDA}	PER0AD/PPS0AD	Disabled
27	PAD1	KWAD1	AN1	—	—	V_{DDA}	PER1AD/PPS1AD	Disabled

Table 1-10. 48-Pin LQFP/QFN Pinout for S12GN16 and S12GN32

	Function <----lowest-----PRIORITY-----highest---->					Power Supply	Internal Pull Resistor	
Package Pin	Pin	2nd Func.	3rd Func.	4th Func	5th Func		CTRL	Reset State
28	PAD9	KWAD9	ACMPO	—	—	V_{DDA}	PER0AD/PPS0AD	Disabled
29	PAD2	KWAD2	AN2	—	—	V_{DDA}	PER1AD/PPS1AD	Disabled
30	PAD10	KWAD10	ACMPP			V_{DDA}	PER0AD/PPS0AD	Disabled
31	PAD3	KWAD3	AN3	—	—	V_{DDA}	PER1AD/PPS1AD	Disabled
32	PAD11	KWAD11	ACMPM			V_{DDA}	PER0AD/PPS0AD	Disabled
33	PAD4	KWAD4	AN4	—	—	V_{DDA}	PER1AD/PPS1AD	Disabled
34	PAD5	KWAD5	AN5	—	—	V_{DDA}	PER1AD/PPS0AD	Disabled
35	PAD6	KWAD6	AN6	—	—	V_{DDA}	PER1AD/PPS1AD	Disabled
36	PAD7	KWAD7	AN7	—	—	V_{DDA}	PER1AD/PPS1AD	Disabled
37	VDDA	VRH	—	—	—	—	—	—
38	VSSA	—	—	—	—	—	—	—
39	PS0	RXD0	—	—	—	V_{DDX}	PERS/PPSS	Up
40	PS1	TXD0	—	—	—	V_{DDX}	PERS/PPSS	Up
41	PS2	—	—	—	—	V_{DDX}	PERS/PPSS	Up
42	PS3	—	—	—	—	V_{DDX}	PERS/PPSS	Up
43	PS4	MISO0	—	—	—	V_{DDX}	PERS/PPSS	Up
44	PS5	MOSI0	—	—	—	V_{DDX}	PERS/PPSS	Up
45	PS6	SCK0	—	—	—	V_{DDX}	PERS/PPSS	Up
46	PS7	API_EXTCLK	ECLK	$\overline{SS0}$	—	V_{DDX}	PERS/PPSS	Up
47	PM0	—	—	—	—	V_{DDX}	PERM/PPSM	Disabled
48	PM1	—	—	—	—	V_{DDX}	PERM/PPSM	Disabled

[1] The regular I/O characteristics (see Section A.2, “I/O Characteristics”) apply if the EXTAL/XTAL function is disabled

1.8.2 S12GNA16 and S12GNA32

1.8.2.1 Pinout 48-Pin LQFP/QFN

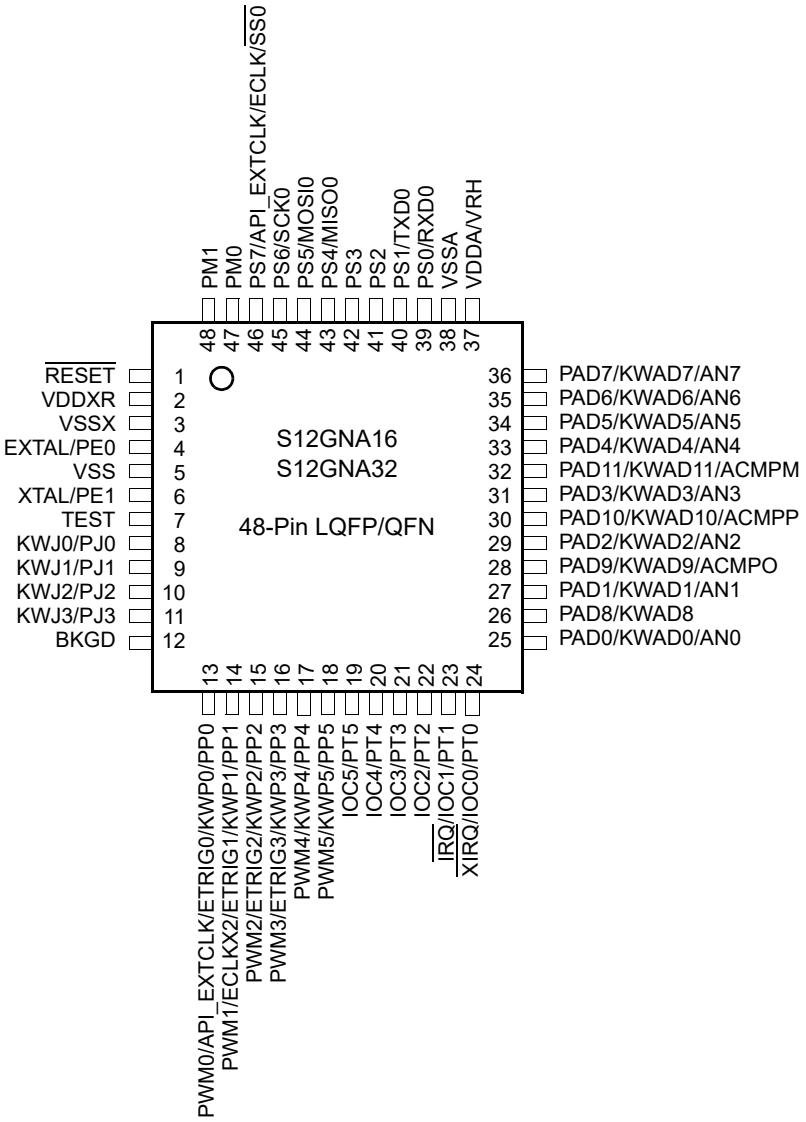

Figure 1-6. 48-Pin LQFP/QFN Pinout for S12GNA16 and S12GNA32

Table 1-11. 48-Pin LQFP/QFN Pinout for S12GNA16 and S12GNA32

	Function <----lowest-----PRIORITY-----highest---->					Power Supply	Internal Pull Resistor	
Package Pin	Pin	2nd Func.	3rd Func.	4th Func	5th Func		CTRL	Reset State
1	RESET	—	—	—	—	V_{DDX}	PULLUP	

Table 1-11. 48-Pin LQFP/QFN Pinout for S12GNA16 and S12GNA32

	Function <----lowest-----PRIORITY-----highest---->					Power Supply	Internal Pull Resistor	
Package Pin	Pin	2nd Func.	3rd Func.	4th Func	5th Func		CTRL	Reset State
2	VDDXR	—	—	—	—	—	—	—
3	VSSX	—	—	—	—	—	—	—
4	PE0[1]	EXTAL	—	—	—	V_{DDX}	PUCR/PDPEE	Down
5	VSS	—	—	—	—	—	—	—
6	PE1[1]	XTAL	—	—	—	V_{DDX}	PUCR/PDPEE	Down
7	TEST	—	—	—	—	N.A.	$\overline{\text{RESET}}$ pin	Down
8	PJ0	KWJ0	—	—	—	V_{DDX}	PERJ/PPSJ	Up
9	PJ1	KWJ1	—	—	—	V_{DDX}	PERJ/PPSJ	Up
10	PJ2	KWJ2	—	—	—	V_{DDX}	PERJ/PPSJ	Up
11	PJ3	KWJ3	—	—	—	V_{DDX}	PERJ/PPSJ	Up
12	BKGD	MODC	—	—	—	V_{DDX}	PUCR/BKPUE	Up
13	PP0	KWP0	ETRIG0	API_EXTCLK	PWM0	V_{DDX}	PERP/PPSP	Disabled
14	PP1	KWP1	ETRIG1	ECLKX2	PWM1	V_{DDX}	PERP/PPSP	Disabled
15	PP2	KWP2	ETRIG2	PWM2	—	V_{DDX}	PERP/PPSP	Disabled
16	PP3	KWP3	ETRIG3	PWM3	—	V_{DDX}	PERP/PPSP	Disabled
17	PP4	KWP4	PWM4	—	—	V_{DDX}	PERP/PPSP	Disabled
18	PP5	KWP5	PWM5	—	—	V_{DDX}	PERP/PPSP	Disabled
19	PT5	IOC5	—	—	—	V_{DDX}	PERT/PPST	Disabled
20	PT4	IOC4	—	—	—	V_{DDX}	PERT/PPST	Disabled
21	PT3	IOC3	—	—	—	V_{DDX}	PERT/PPST	Disabled
22	PT2	IOC2	—	—	—	V_{DDX}	PERT/PPST	Disabled
23	PT1	IOC1	$\overline{\text{IRQ}}$	—	—	V_{DDX}	PERT/PPST	Disabled
24	PT0	IOC0	$\overline{\text{XIRQ}}$	—	—	V_{DDX}	PERT/PPST	Disabled
25	PAD0	KWAD0	AN0	—	—	V_{DDA}	PER1AD/PPS1AD	Disabled
26	PAD8	KWAD8	—	—	—	V_{DDA}	PER0AD/PPS0AD	Disabled
27	PAD1	KWAD1	AN1	—	—	V_{DDA}	PER1AD/PPS1AD	Disabled
28	PAD9	KWAD9	ACMPO	—	—	V_{DDA}	PER0AD/PPS0AD	Disabled
29	PAD2	KWAD2	AN2	—	—	V_{DDA}	PER1AD/PPS1AD	Disabled

Table 1-11. 48-Pin LQFP/QFN Pinout for S12GNA16 and S12GNA32

	Function <----lowest-----PRIORITY-----highest---->					Power Supply	Internal Pull Resistor	
Package Pin	Pin	2nd Func.	3rd Func.	4th Func	5th Func		CTRL	Reset State
30	PAD10	KWAD10	ACMPP			V_{DDA}	PER0AD/PPS0AD	Disabled
31	PAD3	KWAD3	AN3	—	—	V_{DDA}	PER1AD/PPS1AD	Disabled
32	PAD11	KWAD11	ACMPM			V_{DDA}	PER0AD/PPS0AD	Disabled
33	PAD4	KWAD4	AN4	—	—	V_{DDA}	PER1AD/PPS1AD	Disabled
34	PAD5	KWAD5	AN5	—	—	V_{DDA}	PER1AD/PPS0AD	Disabled
35	PAD6	KWAD6	AN6	—	—	V_{DDA}	PER1AD/PPS1AD	Disabled
36	PAD7	KWAD7	AN7	—	—	V_{DDA}	PER1AD/PPS1AD	Disabled
37	VDDA	VRH	—	—	—	—	—	—
38	VSSA	—	—	—	—	—	—	—
39	PS0	RXD0	—	—	—	V_{DDX}	PERS/PPSS	Up
40	PS1	TXD0	—	—	—	V_{DDX}	PERS/PPSS	Up
41	PS2	—	—	—	—	V_{DDX}	PERS/PPSS	Up
42	PS3	—	—	—	—	V_{DDX}	PERS/PPSS	Up
43	PS4	MISO0	—	—	—	V_{DDX}	PERS/PPSS	Up
44	PS5	MOSI0	—	—	—	V_{DDX}	PERS/PPSS	Up
45	PS6	SCK0	—	—	—	V_{DDX}	PERS/PPSS	Up
46	PS7	API_EXTCLK	ECLK	$\overline{SS0}$	—	V_{DDX}	PERS/PPSS	Up
47	PM0	—	—	—	—	V_{DDX}	PERM/PPSM	Disabled
48	PM1	—	—	—	—	V_{DDX}	PERM/PPSM	Disabled

[1] The regular I/O characteristics (see Section A.2, “I/O Characteristics”) apply if the EXTAL/XTAL function is disabled

1.8.3 S12GN48

1.8.3.1 Pinout 32-Pin LQFP

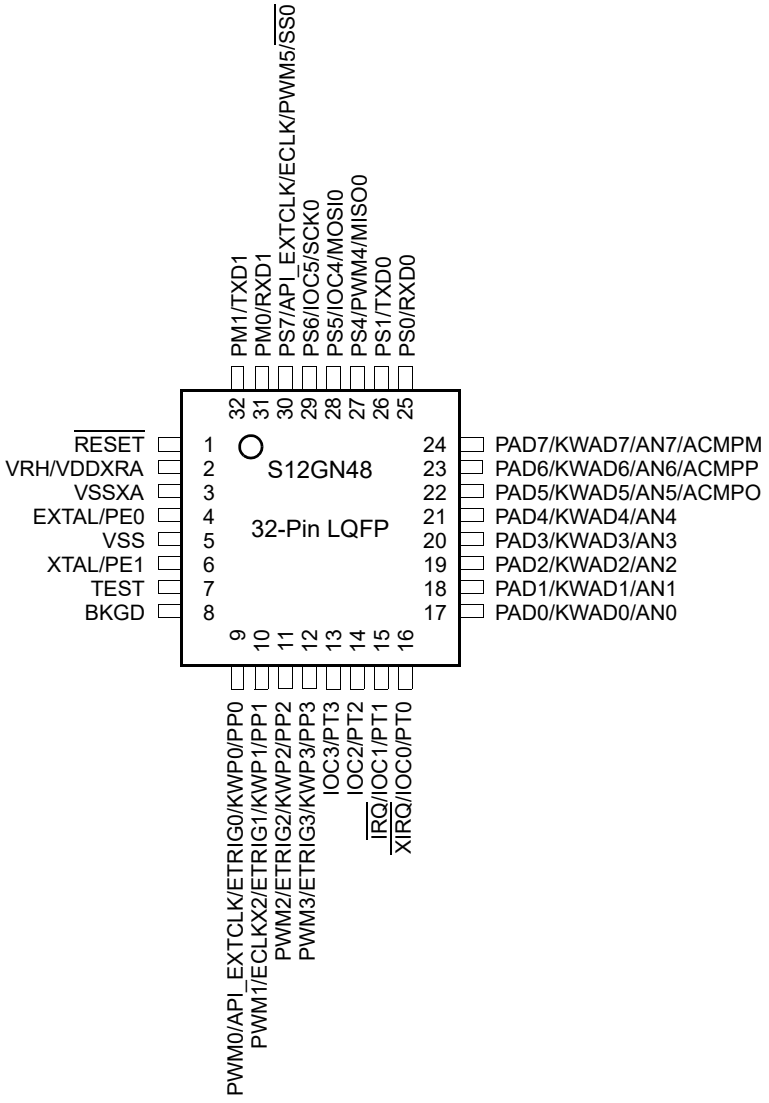

Figure 1-7. 32-Pin LQFP Pinout for S12GN48

Table 1-12. 32-Pin LQFP Pinout for S12GN48

	Function <----lowest-----PRIORITY-----highest---->					Power Supply	Internal Pull Resistor	
Package Pin	Pin	2nd Func.	3rd Func.	4th Func	5th Func		CTRL	Reset State
1	RESET	—	—	—	—	V_{DDX}	PULLUP	
2	VDDXRA	VRH	—	—	—	—	—	—
3	VSSXA	—	—	—	—	—	—	—
4	PE0[1]	EXTAL	—	—	—	—	PUCR/PDPEE	Down

Table 1-12. 32-Pin LQFP Pinout for S12GN48

	Function <----lowest-----PRIORITY-----highest---->					Power Supply	Internal Pull Resistor	
Package Pin	Pin	2nd Func.	3rd Func.	4th Func	5th Func		CTRL	Reset State
5	VSS	—	—	—	—	—	—	—
6	PE1[1]	XTAL	—	—	—	—	PUCR/PDPEE	Down
7	TEST	—	—	—	—	N.A.	$\overline{\text{RESET}}$ pin	Down
8	BKGD	MODC	—	—	—	V_{DDX}	PUCR/BKPUE	Up
9	PP0	KWP0	ETRIG0	API_EXTCLK	PWM0	V_{DDX}	PERP/PPSP	Disabled
10	PP1	KWP1	ETRIG1	ECLKX2	PWM1	V_{DDX}	PERP/PPSP	Disabled
11	PP2	KWP2	ETRIG2	PWM2	—	V_{DDX}	PERP/PPSP	Disabled
12	PP3	KWP3	ETRIG3	PWM3	—	V_{DDX}	PERP/PPSP	Disabled
13	PT3	IOC3	—	—	—	V_{DDX}	PERT/PPST	Disabled
14	PT2	IOC2	—	—	—	V_{DDX}	PERT/PPST	Disabled
15	PT1	IOC1	$\overline{\text{IRQ}}$	—	—	V_{DDX}	PERT/PPST	Disabled
16	PT0	IOC0	$\overline{\text{XIRQ}}$	—	—	V_{DDX}	PERT/PPST	Disabled
17	PAD0	KWAD0	AN0	—	—	V_{DDA}	PER1AD/PPS1AD	Disabled
18	PAD1	KWAD1	AN1	—	—	V_{DDA}	PER1AD/PPS1AD	Disabled
19	PAD2	KWAD2	AN2	—	—	V_{DDA}	PER1AD/PPS1AD	Disabled
20	PAD3	KWAD3	AN3	—	—	V_{DDA}	PER1AD/PPS1AD	Disabled
21	PAD4	KWAD4	AN4	—	—	V_{DDA}	PER1AD/PPS1AD	Disabled
22	PAD5	KWAD5	AN5	ACMPO	—	V_{DDA}	PER1AD/PPS1AD	Disabled
23	PAD6	KWAD6	AN6	ACMPP	—	V_{DDA}	PER1AD/PPS1AD	Disabled
24	PAD7	KWAD7	AN7	ACMPM	—	V_{DDA}	PER1AD/PPS1AD	Disabled
25	PS0	RXD0	—	—	—	V_{DDX}	PERS/PPSS	Up
26	PS1	TXD0	—	—	—	V_{DDX}	PERS/PPSS	Up
27	PS4	PWM4	MISO0	—	—	V_{DDX}	PERS/PPSS	Up
28	PS5	IOC4	MOSI0	—	—	V_{DDX}	PERS/PPSS	Up
29	PS6	IOC5	SCK0	—	—	V_{DDX}	PERS/PPSS	Up
30	PS7	API_EXTCLK	ECLK	PWM5	$\overline{\text{SS0}}$	V_{DDX}	PERS/PPSS	Up
31	PM0	RXD1	—	—	—	V_{DDX}	PERM/PPSM	Disabled
32	PM1	TXD1	—	—	—	V_{DDX}	PERM/PPSM	Disabled

[1] The regular I/O characteristics (see Section A.2, “I/O Characteristics”) apply if the EXTAL/XTAL function is disabled

1.8.3.2 Pinout 48-Pin LQFP

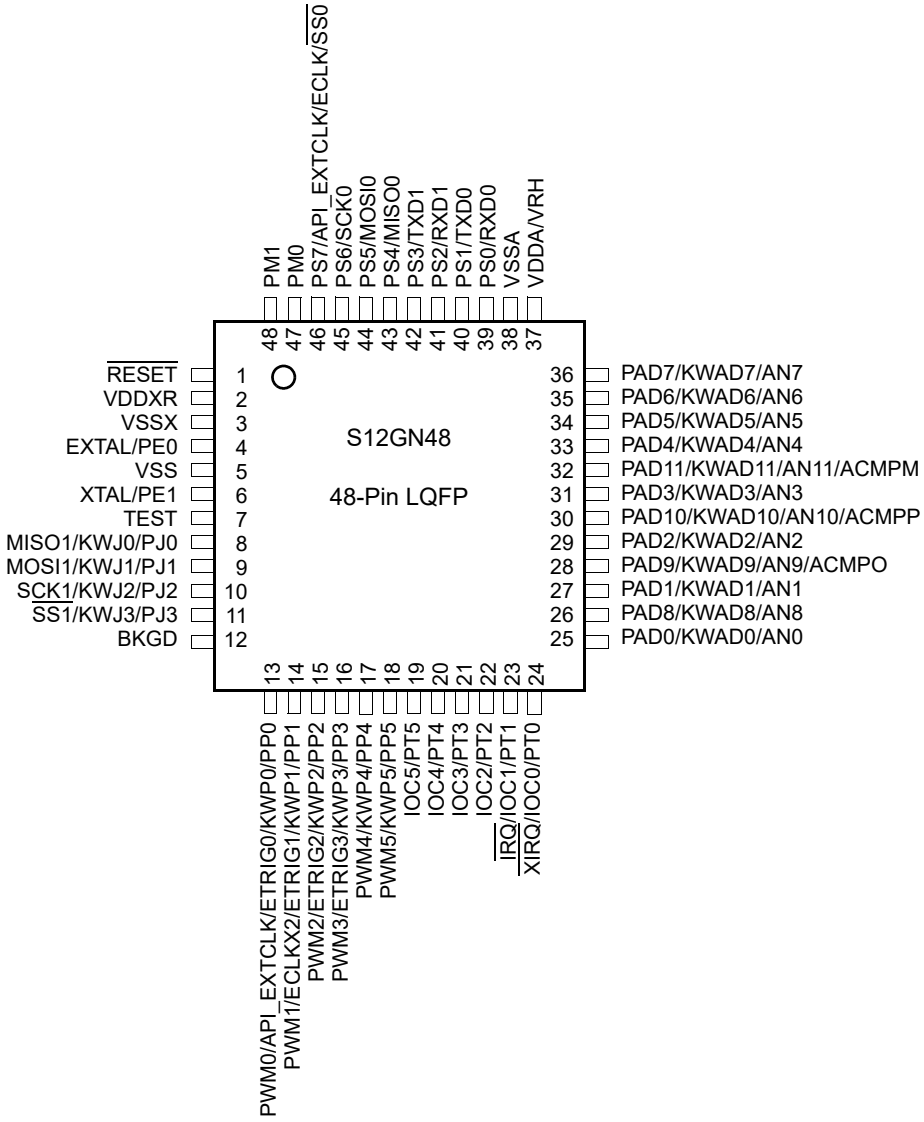

Figure 1-8. 48-Pin LQFP Pinout for S12GN48

Table 1-13. 48-Pin LQFP Pinout for S12GN48

	Function <----lowest-----PRIORITY-----highest---->					Power Supply	Internal Pull Resistor	
Package Pin	Pin	2nd Func.	3rd Func.	4th Func	5th Func		CTRL	Reset State
1	RESET	—	—	—	—	V_{DDX}	PULLUP	
2	VDDXR	—	—	—	—	—	—	—
3	VSSX	—	—	—	—	—	—	—
4	PE0[1]	EXTAL	—	—	—	V_{DDX}	PUCR/PDPEE	Down
5	VSS	—	—	—	—	—	—	—
6	PE1[1]	XTAL	—	—	—	V_{DDX}	PUCR/PDPEE	Down
7	TEST	—	—	—	—	N.A.	$\overline{\text{RESET}}$ pin	Down
8	PJ0	KWJ0	MISO1	—	—	V_{DDX}	PERJ/PPSJ	Up
9	PJ1	KWJ1	MOSI1	—	—	V_{DDX}	PERJ/PPSJ	Up
10	PJ2	KWJ2	SCK1	—	—	V_{DDX}	PERJ/PPSJ	Up
11	PJ3	KWJ3	$\overline{\text{SS1}}$	—	—	V_{DDX}	PERJ/PPSJ	Up
12	BKGD	MODC	—	—	—	V_{DDX}	PUCR/BKPUE	Up
13	PP0	KWP0	ETRIG0	API_EXTCLK	PWM0	V_{DDX}	PERP/PPSP	Disabled
14	PP1	KWP1	ETRIG1	ECLKX2	PWM1	V_{DDX}	PERP/PPSP	Disabled
15	PP2	KWP2	ETRIG2	PWM2	—	V_{DDX}	PERP/PPSP	Disabled
16	PP3	KWP3	ETRIG3	PWM3	—	V_{DDX}	PERP/PPSP	Disabled
17	PP4	KWP4	PWM4	—	—	V_{DDX}	PERP/PPSP	Disabled
18	PP5	KWP5	PWM5	—	—	V_{DDX}	PERP/PPSP	Disabled
19	PT5	IOC5	—	—	—	V_{DDX}	PERT/PPST	Disabled
20	PT4	IOC4	—	—	—	V_{DDX}	PERT/PPST	Disabled
21	PT3	IOC3	—	—	—	V_{DDX}	PERT/PPST	Disabled
22	PT2	IOC2	—	—	—	V_{DDX}	PERT/PPST	Disabled
23	PT1	IOC1	$\overline{\text{IRQ}}$	—	—	V_{DDX}	PERT/PPST	Disabled
24	PT0	IOC0	$\overline{\text{XIRQ}}$	—	—	V_{DDX}	PERT/PPST	Disabled
25	PAD0	KWAD0	AN0	—	—	V_{DDA}	PER1AD/PPS1AD	Disabled
26	PAD8	KWAD8	AN8	—	—	V_{DDA}	PER0AD/PPS0AD	Disabled
27	PAD1	KWAD1	AN1	—	—	V_{DDA}	PER1AD/PPS1AD	Disabled

Table 1-13. 48-Pin LQFP Pinout for S12GN48

	Function <----lowest-----PRIORITY-----highest---->					Power Supply	Internal Pull Resistor	
Package Pin	Pin	2nd Func.	3rd Func.	4th Func	5th Func		CTRL	Reset State
28	PAD9	KWAD9	AN9	ACMPO	—	V_{DDA}	PER0AD/PPS0AD	Disabled
29	PAD2	KWAD2	AN2	—	—	V_{DDA}	PER1AD/PPS1AD	Disabled
30	PAD10	KWAD10	AN10	ACMPP		V_{DDA}	PER0AD/PPS0AD	Disabled
31	PAD3	KWAD3	AN3	—	—	V_{DDA}	PER1AD/PPS1AD	Disabled
32	PAD11	KWAD11	AN11	ACMPM		V_{DDA}	PER0AD/PPS0AD	Disabled
33	PAD4	KWAD4	AN4	—	—	V_{DDA}	PER1AD/PPS1AD	Disabled
34	PAD5	KWAD5	AN5	—	—	V_{DDA}	PER1AD/PPS0AD	Disabled
35	PAD6	KWAD6	AN6	—	—	V_{DDA}	PER1AD/PPS1AD	Disabled
36	PAD7	KWAD7	AN7	—	—	V_{DDA}	PER1AD/PPS1AD	Disabled
37	VDDA	VRH	—	—	—	—	—	—
38	VSSA	—	—	—	—	—	—	—
39	PS0	RXD0	—	—	—	V_{DDX}	PERS/PPSS	Up
40	PS1	TXD0	—	—	—	V_{DDX}	PERS/PPSS	Up
41	PS2	RXD1	—	—	—	V_{DDX}	PERS/PPSS	Up
42	PS3	TXD1	—	—	—	V_{DDX}	PERS/PPSS	Up
43	PS4	MISO0	—	—	—	V_{DDX}	PERS/PPSS	Up
44	PS5	MOSI0	—	—	—	V_{DDX}	PERS/PPSS	Up
45	PS6	SCK0	—	—	—	V_{DDX}	PERS/PPSS	Up
46	PS7	API_EXTCLK	ECLK	$\overline{SS0}$	—	V_{DDX}	PERS/PPSS	Up
47	PM0	—	—	—	—	V_{DDX}	PERM/PPSM	Disabled
48	PM1	—	—	—	—	V_{DDX}	PERM/PPSM	Disabled

[1] The regular I/O characteristics (see Section A.2, “I/O Characteristics”) apply if the EXTAL/XTAL function is disabled

1.8.3.3 Pinout 64-Pin LQFP

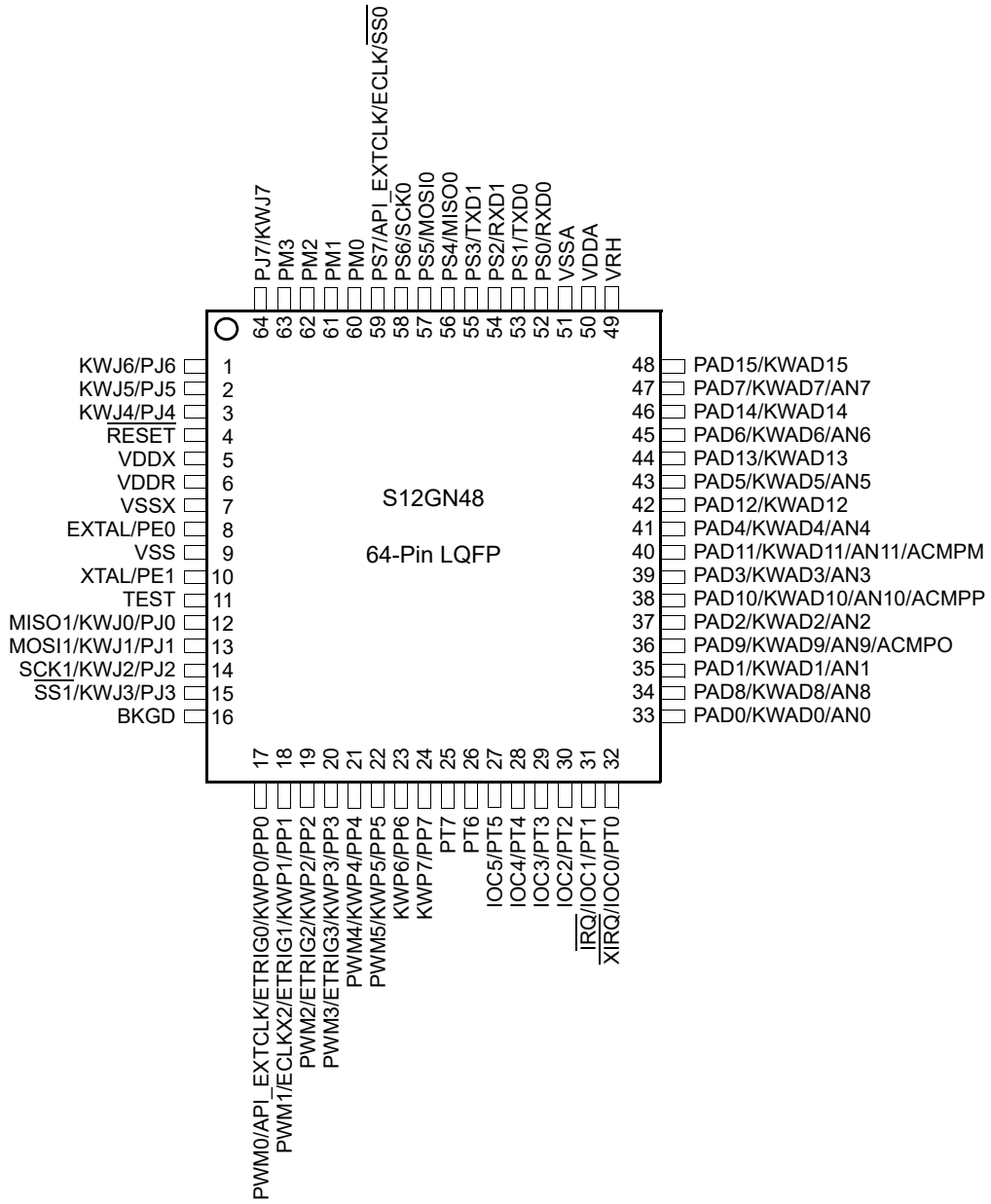

Figure 1-9. 64-Pin LQFP Pinout for S12GN48

Table 1-14. 64-Pin LQFP Pinout for S12GN48

	Function <----lowest-----PRIORITY-----highest---->					Power Supply	Internal Pull Resistor	
Package Pin	Pin	2nd Func.	3rd Func.	4th Func	5th Func		CTRL	Reset State
1	PJ6	KWJ6	—	—	—	V_{DDX}	PERJ/PPSJ	Up
2	PJ5	KWJ5	—	—	—	V_{DDX}	PERJ/PPSJ	Up
3	PJ4	KWJ4	—	—	—	V_{DDX}	PERJ/PPSJ	Up
4	RESET	—	—	—	—	V_{DDX}	PULLUP	
5	VDDX	—	—	—	—	—	—	—
6	VDDR	—	—	—	—	—	—	—
7	VSSX	—	—	—	—	—	—	—
8	PE0[1]	EXTAL	—	—	—	V_{DDX}	PUCR/PDPEE	Down
9	VSS	—	—	—	—	—	—	—
10	PE1[1]	XTAL	—	—	—	V_{DDX}	PUCR/PDPEE	Down
11	TEST	—	—	—	—	N.A.	$\overline{\text{RESET}}$ pin	Down
12	PJ0	KWJ0	MISO1	—	—	V_{DDX}	PERJ/PPSJ	Up
13	PJ1	KWJ1	MOSI1	—	—	V_{DDX}	PERJ/PPSJ	Up
14	PJ2	KWJ2	SCK1	—	—	V_{DDX}	PERJ/PPSJ	Up
15	PJ3	KWJ3	$\overline{\text{SS1}}$	—	—	V_{DDX}	PERJ/PPSJ	Up
16	BKGD	MODC	—	—	—	V_{DDX}	PUCR/BKPUE	Up
17	PP0	KWP0	ETRIG0	API_EXTCLK	PWM0	V_{DDX}	PERP/PPSP	Disabled
18	PP1	KWP1	ETRIG1	ECLKX2	PWM1	V_{DDX}	PERP/PPSP	Disabled
19	PP2	KWP2	ETRIG2	PWM2	—	V_{DDX}	PERP/PPSP	Disabled
20	PP3	KWP3	ETRIG3	PWM3	—	V_{DDX}	PERP/PPSP	Disabled
21	PP4	KWP4	PWM4	—	—	V_{DDX}	PERP/PPSP	Disabled
22	PP5	KWP5	PWM5	—	—	V_{DDX}	PERP/PPSP	Disabled
23	PP6	KWP6		—	—	V_{DDX}	PERP/PPSP	Disabled
24	PP7	KWP7		—	—	V_{DDX}	PERP/PPSP	Disabled
25	PT7	—	—	—	—	V_{DDX}	PERT/PPST	Disabled
26	PT6	—	—	—	—	V_{DDX}	PERT/PPST	Disabled
27	PT5	IOC5	—	—	—	V_{DDX}	PERT/PPST	Disabled

Table 1-14. 64-Pin LQFP Pinout for S12GN48

	Function <----lowest-----PRIORITY-----highest---->					Power Supply	Internal Pull Resistor	
Package Pin	Pin	2nd Func.	3rd Func.	4th Func	5th Func		CTRL	Reset State
28	PT4	IOC4	—	—	—	V_{DDX}	PERT/PPST	Disabled
29	PT3	IOC3	—	—	—	V_{DDX}	PERT/PPST	Disabled
30	PT2	IOC2	—	—	—	V_{DDX}	PERT/PPST	Disabled
31	PT1	IOC1	$\overline{IRQ}$	—	—	V_{DDX}	PERT/PPST	Disabled
32	PT0	IOC0	$\overline{XIRQ}$	—	—	V_{DDX}	PERT/PPST	Disabled
33	PAD0	KWAD0	AN0	—	—	V_{DDA}	PER1AD/PPS1AD	Disabled
34	PAD8	KWAD8	AN8	—	—	V_{DDA}	PER0AD/PPS0AD	Disabled
35	PAD1	KWAD1	AN1	—	—	V_{DDA}	PER1AD/PPS1AD	Disabled
36	PAD9	KWAD9	AN9	ACMPO	—	V_{DDA}	PER0ADPPS0AD	Disabled
37	PAD2	KWAD2	AN2	—	—	V_{DDA}	PER1AD/PPS1AD	Disabled
38	PAD10	KWAD10	AN10	ACMPP	—	V_{DDA}	PER0AD/PPS0AD	Disabled
39	PAD3	KWAD3	AN3	—	—	V_{DDA}	PER1AD/PPS1AD	Disabled
40	PAD11	KWAD11	AN11	ACMPM	—	V_{DDA}	PER0AD/PPS0AD	Disabled
41	PAD4	KWAD4	AN4	—	—	V_{DDA}	PER1AD/PPS1AD	Disabled
42	PAD12	KWAD12	—	—	—	V_{DDA}	PER0AD/PPS0AD	Disabled
43	PAD5	KWAD5	AN5	—	—	V_{DDA}	PER1AD/PPS1AD	Disabled
44	PAD13	KWAD13	—	—	—	V_{DDA}	PER0AD/PPS0AD	Disabled
45	PAD6	KWAD6	AN6	—	—	V_{DDA}	PER1AD/PPS1AD	Disabled
46	PAD14	KWAD14	—		—	V_{DDA}	PER0AD/PPS0AD	Disabled
47	PAD7	KWAD7	AN7	—	—	V_{DDA}	PER1AD/PPS1AD	Disabled
48	PAD15	KWAD15	—		—	V_{DDA}	PER0AD/PPS0AD	Disabled
49	VRH	—	—	—	—	—	—	—
50	VDDA	—	—	—	—	—	—	—
51	VSSA	—	—	—	—	—	—	—
52	PS0	RXD0	—	—	—	V_{DDX}	PERS/PPSS	Up
53	PS1	TXD0	—	—	—	V_{DDX}	PERS/PPSS	Up
54	PS2	RXD1	—	—	—	V_{DDX}	PERS/PPSS	Up
55	PS3	TXD1	—	—	—	V_{DDX}	PERS/PPSS	Up
56	PS4	MISO0	—	—	—	V_{DDX}	PERS/PPSS	Up

Table 1-14. 64-Pin LQFP Pinout for S12GN48

	Function <----lowest-----PRIORITY-----highest---->					Power Supply	Internal Pull Resistor	
Package Pin	**Pin**	**2nd Func.**	**3rd Func.**	**4th Func**	**5th Func**		**CTRL**	**Reset State**
57	PS5	MOSI0	—	—	—	V_{DDX}	PERS/PPSS	Up
58	PS6	SCK0	—	—	—	V_{DDX}	PERS/PPSS	Up
59	PS7	API_EXTCLK	ECLK	$\overline{SS0}$	—	V_{DDX}	PERS/PPSS	Up
60	PM0	—	—	—	—	V_{DDX}	PERM/PPSM	Disabled
61	PM1	—	—	—	—	V_{DDX}	PERM/PPSM	Disabled
62	PM2	—	—	—	—	V_{DDX}	PERM/PPSM	Disabled
63	PM3	—	—	—	—	V_{DDX}	PERM/PPSM	Disabled
64	PJ7	KWJ7	—	—	—	V_{DDX}	PERJ/PPSJ	Up

[1] The regular I/O characteristics (see Section A.2, “I/O Characteristics”) apply if the EXTAL/XTAL function is disabled

1.8.4 S12G48 and S12G64

1.8.4.1 Pinout 32-Pin LQFP

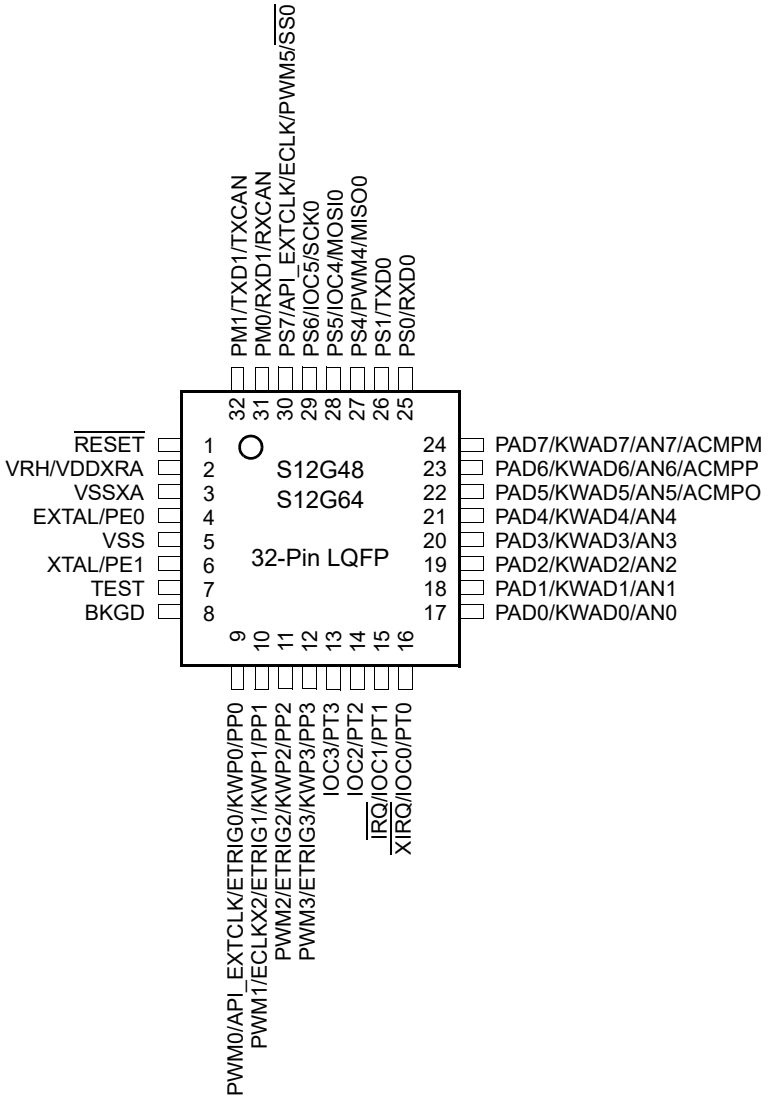

Figure 1-10. 32-Pin LQFP Pinout for S12G48 and S12G64

Table 1-15. 32-Pin LQFP Pinout for S12G48 and S12G64

	Function <----lowest-----PRIORITY-----highest---->					Power Supply	Internal Pull Resistor	
Package Pin	Pin	2nd Func.	3rd Func.	4th Func	5th Func		CTRL	Reset State
1	RESET	—	—	—	—	V_{DDX}	PULLUP	

Table 1-15. 32-Pin LQFP Pinout for S12G48 and S12G64

	Function <----lowest-----PRIORITY-----highest---->					Power Supply	Internal Pull Resistor	
Package Pin	Pin	2nd Func.	3rd Func.	4th Func	5th Func		CTRL	Reset State
2	VDDXRA	VRH	—	—	—	—	—	—
3	VSSXA	—	—	—	—	—	—	—
4	PE0[1]	EXTAL	—	—	—	—	PUCR/PDPEE	Down
5	VSS	—	—	—	—	—	—	—
6	PE1[1]	XTAL	—	—	—	—	PUCR/PDPEE	Down
7	TEST	—	—	—	—	N.A.	$\overline{\text{RESET}}$ pin	Down
8	BKGD	MODC	—	—	—	V_{DDX}	PUCR/BKPUE	Up
9	PP0	KWP0	ETRIG0	API_EXTCLK	PWM0	V_{DDX}	PERP/PPSP	Disabled
10	PP1	KWP1	ETRIG1	ECLKX2	PWM1	V_{DDX}	PERP/PPSP	Disabled
11	PP2	KWP2	ETRIG2	PWM2	—	V_{DDX}	PERP/PPSP	Disabled
12	PP3	KWP3	ETRIG3	PWM3	—	V_{DDX}	PERP/PPSP	Disabled
13	PT3	IOC3	—	—	—	V_{DDX}	PERT/PPST	Disabled
14	PT2	IOC2	—	—	—	V_{DDX}	PERT/PPST	Disabled
15	PT1	IOC1	$\overline{\text{IRQ}}$	—	—	V_{DDX}	PERT/PPST	Disabled
16	PT0	IOC0	$\overline{\text{XIRQ}}$	—	—	V_{DDX}	PERT/PPST	Disabled
17	PAD0	KWAD0	AN0	—	—	V_{DDA}	PER1AD/PPS1AD	Disabled
18	PAD1	KWAD1	AN1	—	—	V_{DDA}	PER1AD/PPS1AD	Disabled
19	PAD2	KWAD2	AN2	—	—	V_{DDA}	PER1AD/PPS1AD	Disabled
20	PAD3	KWAD3	AN3	—	—	V_{DDA}	PER1AD/PPS1AD	Disabled
21	PAD4	KWAD4	AN4	—	—	V_{DDA}	PER1AD/PPS1AD	Disabled
22	PAD5	KWAD5	AN5	ACMPO	—	V_{DDA}	PER1AD/PPS1AD	Disabled
23	PAD6	KWAD6	AN6	ACMPP	—	V_{DDA}	PER1AD/PPS1AD	Disabled
24	PAD7	KWAD7	AN7	ACMPM	—	V_{DDA}	PER1AD/PPS1AD	Disabled
25	PS0	RXD0	—	—	—	V_{DDX}	PERS/PPSS	Up
26	PS1	TXD0	—	—	—	V_{DDX}	PERS/PPSS	Up
27	PS4	PWM4	MISO0	—	—	V_{DDX}	PERS/PPSS	Up
28	PS5	IOC4	MOSI0	—	—	V_{DDX}	PERS/PPSS	Up
29	PS6	IOC5	SCK0	—	—	V_{DDX}	PERS/PPSS	Up

Table 1-15. 32-Pin LQFP Pinout for S12G48 and S12G64

	Function <----lowest-----PRIORITY-----highest---->					Power Supply	Internal Pull Resistor	
Package Pin	**Pin**	**2nd Func.**	**3rd Func.**	**4th Func**	**5th Func**		**CTRL**	**Reset State**
30	PS7	API_EXTCLK	ECLK	PWM5	$\overline{SS0}$	V_{DDX}	PERS/PPSS	Up
31	PM0	RXD1	RXCAN	—	—	V_{DDX}	PERM/PPSM	Disabled
32	PM1	TXD1	TXCAN	—	—	V_{DDX}	PERM/PPSM	Disabled

[1] The regular I/O characteristics (see Section A.2, “I/O Characteristics”) apply if the EXTAL/XTAL function is disabled

1.8.4.2 Pinout 48-Pin LQFP

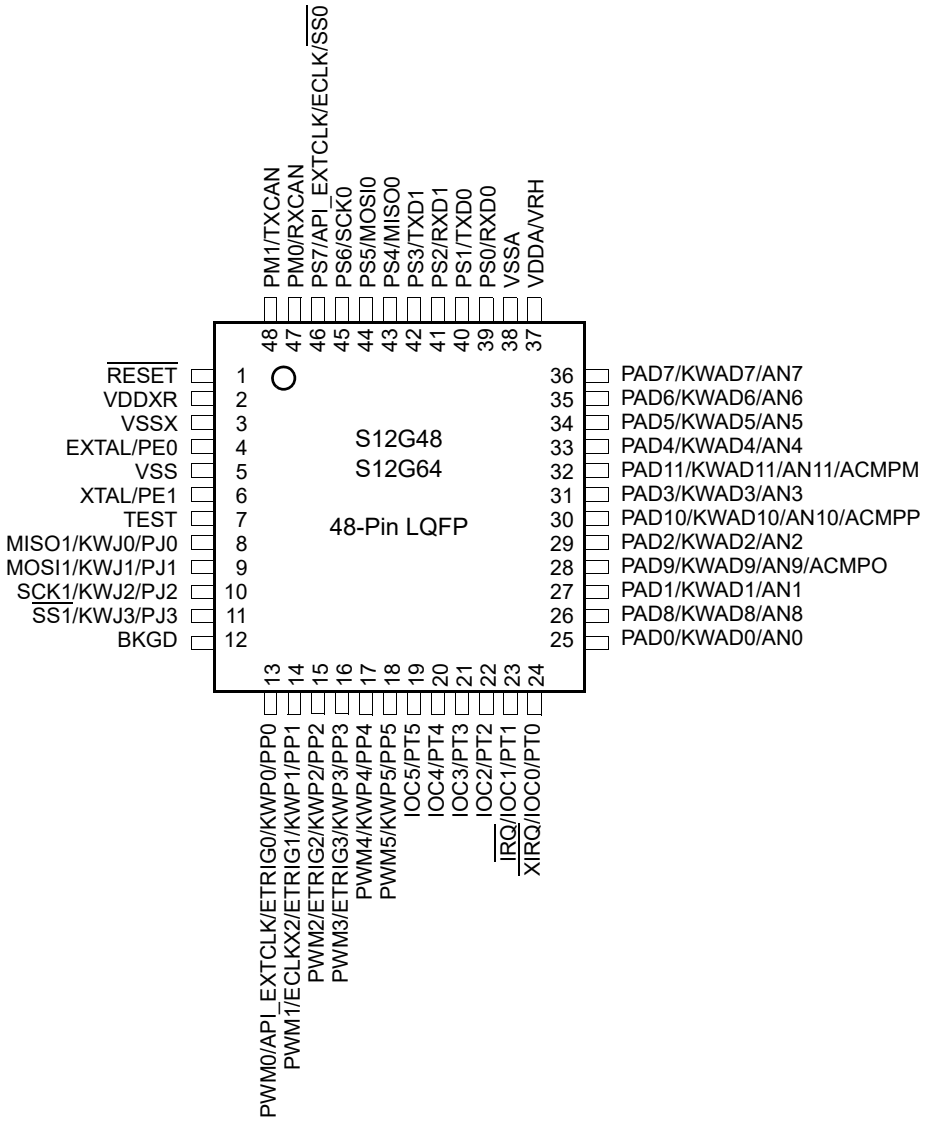

Figure 1-11. 48-Pin LQFP Pinout for S12G48 and S12G64

Table 1-16. 48-Pin LQFP Pinout for S12G48 and S12G64

	Function <----lowest-----PRIORITY-----highest---->					Power Supply	Internal Pull Resistor	
Package Pin	Pin	2nd Func.	3rd Func.	4th Func	5th Func		CTRL	Reset State
1	RESET	—	—	—	—	V_{DDX}	PULLUP	
2	VDDXR	—	—	—	—	—	—	—

Table 1-16. 48-Pin LQFP Pinout for S12G48 and S12G64

	Function <----lowest-----PRIORITY-----highest---->					Power Supply	Internal Pull Resistor	
Package Pin	Pin	2nd Func.	3rd Func.	4th Func	5th Func		CTRL	Reset State
3	VSSX	—	—	—	—	—	—	—
4	PE0[1]	EXTAL	—	—	—	V_{DDX}	PUCR/PDPEE	Down
5	VSS	—	—	—	—	—	—	—
6	PE1[1]	XTAL	—	—	—	V_{DDX}	PUCR/PDPEE	Down
7	TEST	—	—	—	—	N.A.	$\overline{\text{RESET}}$ pin	Down
8	PJ0	KWJ0	—	MISO1	—	V_{DDX}	PERJ/PPSJ	Up
9	PJ1	KWJ1	—	MOSI1	—	V_{DDX}	PERJ/PPSJ	Up
10	PJ2	KWJ2	—	SCK1	—	V_{DDX}	PERJ/PPSJ	Up
11	PJ3	KWJ3	—	$\overline{\text{SS1}}$	—	V_{DDX}	PERJ/PPSJ	Up
12	BKGD	MODC	—	—	—	V_{DDX}	PUCR/BKPUE	Up
13	PP0	KWP0	ETRIG0	API_EXTCLK	PWM0	V_{DDX}	PERP/PPSP	Disabled
14	PP1	KWP1	ETRIG1	ECLKX2	PWM1	V_{DDX}	PERP/PPSP	Disabled
15	PP2	KWP2	ETRIG2	PWM2	—	V_{DDX}	PERP/PPSP	Disabled
16	PP3	KWP3	ETRIG3	PWM3	—	V_{DDX}	PERP/PPSP	Disabled
17	PP4	KWP4	PWM4	—	—	V_{DDX}	PERP/PPSP	Disabled
18	PP5	KWP5	PWM5	—	—	V_{DDX}	PERP/PPSP	Disabled
19	PT5	IOC5	—	—	—	V_{DDX}	PERT/PPST	Disabled
20	PT4	IOC4	—	—	—	V_{DDX}	PERT/PPST	Disabled
21	PT3	IOC3	—	—	—	V_{DDX}	PERT/PPST	Disabled
22	PT2	IOC2	—	—	—	V_{DDX}	PERT/PPST	Disabled
23	PT1	IOC1	$\overline{\text{IRQ}}$	—	—	V_{DDX}	PERT/PPST	Disabled
24	PT0	IOC0	$\overline{\text{XIRQ}}$	—	—	V_{DDX}	PERT/PPST	Disabled
25	PAD0	KWAD0	AN0	—	—	V_{DDA}	PER1AD/PPS1AD	Disabled
26	PAD8	KWAD8	AN8	—	—	V_{DDA}	PER0AD/PPS0AD	Disabled
27	PAD1	KWAD1	AN1	—	—	V_{DDA}	PER1AD/PPS1AD	Disabled
28	PAD9	KWAD9	AN9	ACMPO	—	V_{DDA}	PER0AD/PPS0AD	Disabled
29	PAD2	KWAD2	AN2	—	—	V_{DDA}	PER1AD/PPS1AD	Disabled
30	PAD10	KWAD10	AN10	ACMPP		V_{DDA}	PER0AD/PPS0AD	Disabled

Table 1-16. 48-Pin LQFP Pinout for S12G48 and S12G64

	Function <----lowest-----PRIORITY-----highest---->					Power Supply	Internal Pull Resistor	
Package Pin	Pin	2nd Func.	3rd Func.	4th Func	5th Func		CTRL	Reset State
31	PAD3	KWAD3	AN3	—	—	V_{DDA}	PER1AD/PPS1AD	Disabled
32	PAD11	KWAD11	AN11	ACMPM		V_{DDA}	PER0AD/PPS0AD	Disabled
33	PAD4	KWAD4	AN4	—	—	V_{DDA}	PER1AD/PPS1AD	Disabled
34	PAD5	KWAD5	AN5	—	—	V_{DDA}	PER1AD/PPS0AD	Disabled
35	PAD6	KWAD6	AN6	—	—	V_{DDA}	PER1AD/PPS1AD	Disabled
36	PAD7	KWAD7	AN7	—	—	V_{DDA}	PER1AD/PPS1AD	Disabled
37	VDDA	VRH	—	—	—	—	—	—
38	VSSA	—	—	—	—	—	—	—
39	PS0	RXD0	—	—	—	V_{DDX}	PERS/PPSS	Up
40	PS1	TXD0	—	—	—	V_{DDX}	PERS/PPSS	Up
41	PS2	RXD1	—	—	—	V_{DDX}	PERS/PPSS	Up
42	PS3	TXD1	—	—	—	V_{DDX}	PERS/PPSS	Up
43	PS4	MISO0	—	—	—	V_{DDX}	PERS/PPSS	Up
44	PS5	MOSI0	—	—	—	V_{DDX}	PERS/PPSS	Up
45	PS6	SCK0	—	—	—	V_{DDX}	PERS/PPSS	Up
46	PS7	API_EXTCLK	ECLK	$\overline{SS0}$	—	V_{DDX}	PERS/PPSS	Up
47	PM0	RXCAN	—	—	—	V_{DDX}	PERM/PPSM	Disabled
48	PM1	TXCAN	—	—	—	V_{DDX}	PERM/PPSM	Disabled

[1] The regular I/O characteristics (see Section A.2, “I/O Characteristics”) apply if the EXTAL/XTAL function is disabled

1.8.4.3 Pinout 64-Pin LQFP

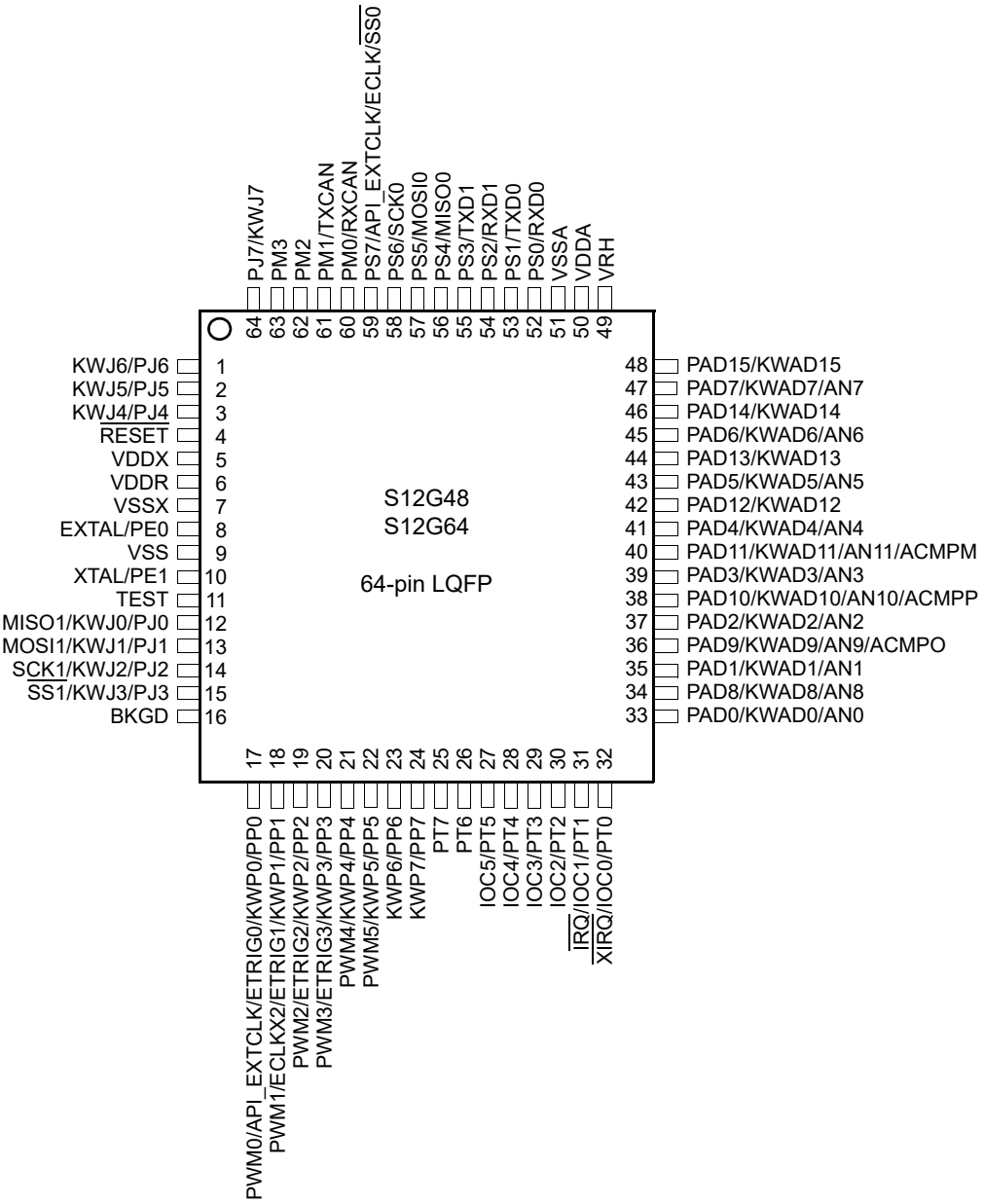

Figure 1-12. 64-Pin LQFP Pinout for S12G48 and S12G64

Table 1-17. 64-Pin LQFP Pinout for S12G48 and S12G64

	Function <----lowest-----PRIORITY-----highest---->					Power Supply	Internal Pull Resistor	
Package Pin	Pin	2nd Func.	3rd Func.	4th Func	5th Func		CTRL	Reset State
1	PJ6	KWJ6	—	—	—	V_{DDX}	PERJ/PPSJ	Up
2	PJ5	KWJ5	—	—	—	V_{DDX}	PERJ/PPSJ	Up
3	PJ4	KWJ4	—	—	—	V_{DDX}	PERJ/PPSJ	Up
4	RESET	—	—	—	—	V_{DDX}	PULLUP	
5	VDDX	—	—	—	—	—	—	—
6	VDDR	—	—	—	—	—	—	—
7	VSSX	—	—	—	—	—	—	—
8	PE0[1]	EXTAL	—	—	—	V_{DDX}	PUCR/PDPEE	Down
9	VSS	—	—	—	—	—	—	—
10	PE1[1]	XTAL	—	—	—	V_{DDX}	PUCR/PDPEE	Down
11	TEST	—	—	—	—	N.A.	$\overline{\text{RESET}}$ pin	Down
12	PJ0	KWJ0	MISO1	—	—	V_{DDX}	PERJ/PPSJ	Up
13	PJ1	KWJ1	MOSI1	—	—	V_{DDX}	PERJ/PPSJ	Up
14	PJ2	KWJ2	SCK1	—	—	V_{DDX}	PERJ/PPSJ	Up
15	PJ3	KWJ3	$\overline{\text{SS1}}$	—	—	V_{DDX}	PERJ/PPSJ	Up
16	BKGD	MODC	—	—	—	V_{DDX}	PUCR/BKPUE	Up
17	PP0	KWP0	ETRIG0	API_EXTCLK	PWM0	V_{DDX}	PERP/PPSP	Disabled
18	PP1	KWP1	ETRIG1	ECLKX2	PWM1	V_{DDX}	PERP/PPSP	Disabled
19	PP2	KWP2	ETRIG2	PWM2	—	V_{DDX}	PERP/PPSP	Disabled
20	PP3	KWP3	ETRIG3	PWM3	—	V_{DDX}	PERP/PPSP	Disabled
21	PP4	KWP4	PWM4	—	—	V_{DDX}	PERP/PPSP	Disabled
22	PP5	KWP5	PWM5	—	—	V_{DDX}	PERP/PPSP	Disabled
23	PP6	KWP6	—	—	—	V_{DDX}	PERP/PPSP	Disabled
24	PP7	KWP7	—	—	—	V_{DDX}	PERP/PPSP	Disabled
25	PT7	—	—	—	—	V_{DDX}	PERT/PPST	Disabled
26	PT6	—	—	—	—	V_{DDX}	PERT/PPST	Disabled
27	PT5	IOC5	—	—	—	V_{DDX}	PERT/PPST	Disabled

Table 1-17. 64-Pin LQFP Pinout for S12G48 and S12G64

	Function <----lowest-----PRIORITY-----highest---->					Power Supply	Internal Pull Resistor	
Package Pin	Pin	2nd Func.	3rd Func.	4th Func	5th Func		CTRL	Reset State
28	PT4	IOC4	—	—	—	V_{DDX}	PERT/PPST	Disabled
29	PT3	IOC3	—	—	—	V_{DDX}	PERT/PPST	Disabled
30	PT2	IOC2	—	—	—	V_{DDX}	PERT/PPST	Disabled
31	PT1	IOC1	$\overline{IRQ}$	—	—	V_{DDX}	PERT/PPST	Disabled
32	PT0	IOC0	$\overline{XIRQ}$	—	—	V_{DDX}	PERT/PPST	Disabled
33	PAD0	KWAD0	AN0	—	—	V_{DDA}	PER1AD/PPS1AD	Disabled
34	PAD8	KWAD8	AN8	—	—	V_{DDA}	PER0AD/PPS0AD	Disabled
35	PAD1	KWAD1	AN1	—	—	V_{DDA}	PER1AD/PPS1AD	Disabled
36	PAD9	KWAD9	AN9	ACMPO	—	V_{DDA}	PER0ADPPS0AD	Disabled
37	PAD2	KWAD2	AN2	—	—	V_{DDA}	PER1AD/PPS1AD	Disabled
38	PAD10	KWAD10	AN10	ACMPP		V_{DDA}	PER0AD/PPS0AD	Disabled
39	PAD3	KWAD3	AN3	—	—	V_{DDA}	PER1AD/PPS1AD	Disabled
40	PAD11	KWAD11	AN11	ACMPM		V_{DDA}	PER0AD/PPS0AD	Disabled
41	PAD4	KWAD4	AN4	—	—	V_{DDA}	PER1AD/PPS1AD	Disabled
42	PAD12	KWAD12	—	—	—	V_{DDA}	PER0AD/PPS0AD	Disabled
43	PAD5	KWAD5	AN5	—	—	V_{DDA}	PER1AD/PPS1AD	Disabled
44	PAD13	KWAD13	—	—	—	V_{DDA}	PER0AD/PPS0AD	Disabled
45	PAD6	KWAD6	AN6	—	—	V_{DDA}	PER1AD/PPS1AD	Disabled
46	PAD14	KWAD14	—	—	—	V_{DDA}	PER0AD/PPS0AD	Disabled
47	PAD7	KWAD7	AN7	—	—	V_{DDA}	PER1AD/PPS1AD	Disabled
48	PAD15	KWAD15	—	—	—	V_{DDA}	PER0AD/PPS0AD	Disabled
49	VRH	—	—	—	—	—	—	—
50	VDDA	—	—	—	—	—	—	—
51	VSSA	—	—	—	—	—	—	—
52	PS0	RXD0	—	—	—	V_{DDX}	PERS/PPSS	Up
53	PS1	TXD0	—	—	—	V_{DDX}	PERS/PPSS	Up
54	PS2	RXD1	—	—	—	V_{DDX}	PERS/PPSS	Up
55	PS3	TXD1	—	—	—	V_{DDX}	PERS/PPSS	Up
56	PS4	MISO0	—	—	—	V_{DDX}	PERS/PPSS	Up

Table 1-17. 64-Pin LQFP Pinout for S12G48 and S12G64

	Function <----lowest-----PRIORITY-----highest---->					Power Supply	Internal Pull Resistor	
Package Pin	**Pin**	**2nd Func.**	**3rd Func.**	**4th Func**	**5th Func**		**CTRL**	**Reset State**
57	PS5	MOSI0	—	—	—	V_{DDX}	PERS/PPSS	Up
58	PS6	SCK0	—	—	—	V_{DDX}	PERS/PPSS	Up
59	PS7	API_EXTCLK	ECLK	$\overline{SS0}$	—	V_{DDX}	PERS/PPSS	Up
60	PM0	RXCAN	—	—	—	V_{DDX}	PERM/PPSM	Disabled
61	PM1	TXCAN	—	—	—	V_{DDX}	PERM/PPSM	Disabled
62	PM2	—	—	—	—	V_{DDX}	PERM/PPSM	Disabled
63	PM3	—	—	—	—	V_{DDX}	PERM/PPSM	Disabled
64	PJ7	KWJ7	—	—	—	V_{DDX}	PERJ/PPSJ	Up

[1] The regular I/O characteristics (see Section A.2, “I/O Characteristics”) apply if the EXTAL/XTAL function is disabled

1.8.5 S12GA48 and S12GA64

1.8.5.1 Pinout 48-Pin LQFP

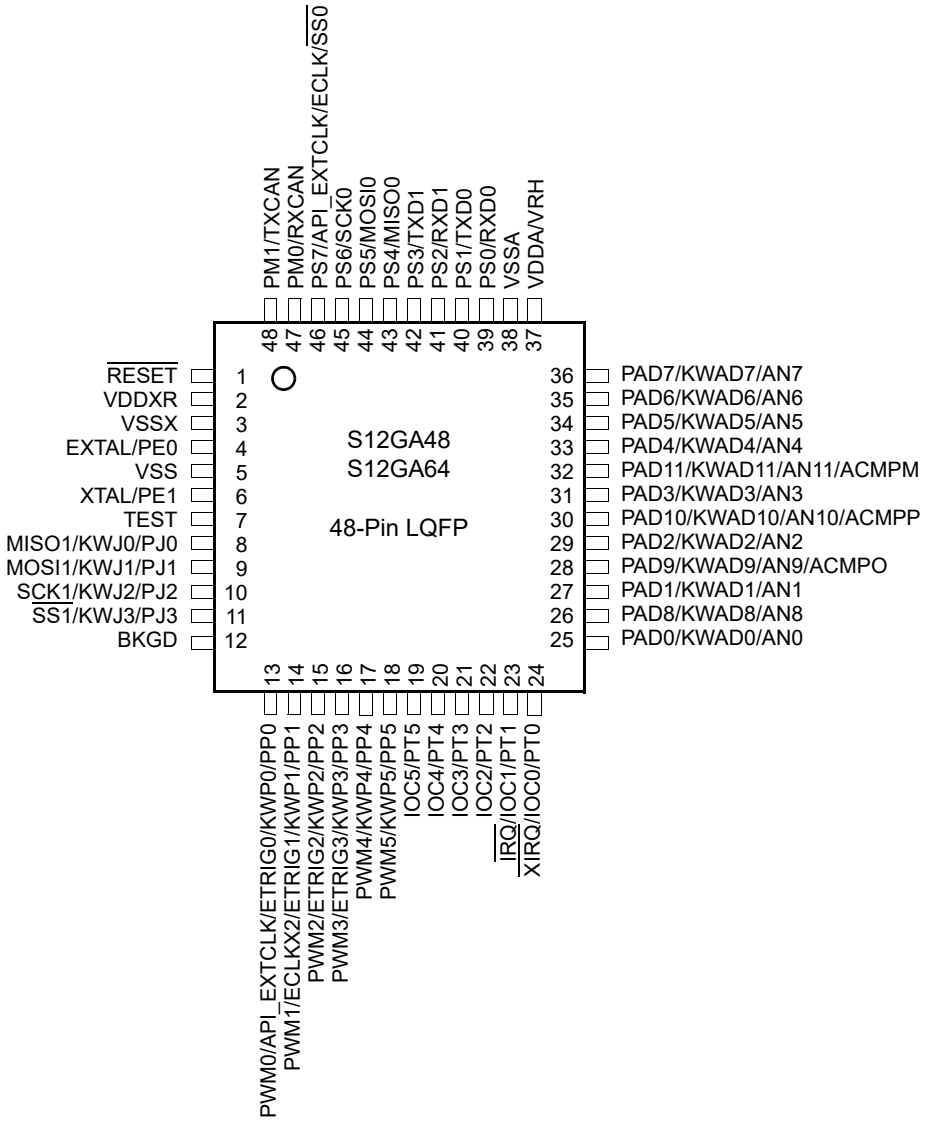

Figure 1-13. 48-Pin LQFP Pinout for S12GA48 and S12GA64

Table 1-18. 48-Pin LQFP Pinout for S12GA48 and S12GA64

	Function <----lowest-----PRIORITY-----highest---->					Power Supply	Internal Pull Resistor	
Package Pin	Pin	2nd Func.	3rd Func.	4th Func	5th Func		CTRL	Reset State
1	RESET	—	—	—	—	V_{DDX}	PULLUP	

Table 1-18. 48-Pin LQFP Pinout for S12GA48 and S12GA64

	Function <----lowest-----PRIORITY-----highest---->					Power Supply	Internal Pull Resistor	
Package Pin	Pin	2nd Func.	3rd Func.	4th Func	5th Func		CTRL	Reset State
2	VDDXR	—	—	—	—	—	—	—
3	VSSX	—	—	—	—	—	—	—
4	PE0[1]	EXTAL	—	—	—	V_{DDX}	PUCR/PDPEE	Down
5	VSS	—	—	—	—	—	—	—
6	PE1[1]	XTAL	—	—	—	V_{DDX}	PUCR/PDPEE	Down
7	TEST	—	—	—	—	N.A.	$\overline{\text{RESET}}$ pin	Down
8	PJ0	KWJ0	—	MISO1	—	V_{DDX}	PERJ/PPSJ	Up
9	PJ1	KWJ1	—	MOSI1	—	V_{DDX}	PERJ/PPSJ	Up
10	PJ2	KWJ2	—	SCK1	—	V_{DDX}	PERJ/PPSJ	Up
11	PJ3	KWJ3	—	$\overline{\text{SS1}}$	—	V_{DDX}	PERJ/PPSJ	Up
12	BKGD	MODC	—	—	—	V_{DDX}	PUCR/BKPUE	Up
13	PP0	KWP0	ETRIG0	API_EXTCLK	PWM0	V_{DDX}	PERP/PPSP	Disabled
14	PP1	KWP1	ETRIG1	ECLKX2	PWM1	V_{DDX}	PERP/PPSP	Disabled
15	PP2	KWP2	ETRIG2	PWM2	—	V_{DDX}	PERP/PPSP	Disabled
16	PP3	KWP3	ETRIG3	PWM3	—	V_{DDX}	PERP/PPSP	Disabled
17	PP4	KWP4	PWM4	—	—	V_{DDX}	PERP/PPSP	Disabled
18	PP5	KWP5	PWM5	—	—	V_{DDX}	PERP/PPSP	Disabled
19	PT5	IOC5	—	—	—	V_{DDX}	PERT/PPST	Disabled
20	PT4	IOC4	—	—	—	V_{DDX}	PERT/PPST	Disabled
21	PT3	IOC3	—	—	—	V_{DDX}	PERT/PPST	Disabled
22	PT2	IOC2	—	—	—	V_{DDX}	PERT/PPST	Disabled
23	PT1	IOC1	$\overline{\text{IRQ}}$	—	—	V_{DDX}	PERT/PPST	Disabled
24	PT0	IOC0	$\overline{\text{XIRQ}}$	—	—	V_{DDX}	PERT/PPST	Disabled
25	PAD0	KWAD0	AN0	—	—	V_{DDA}	PER1AD/PPS1AD	Disabled
26	PAD8	KWAD8	AN8	—	—	V_{DDA}	PER0AD/PPS0AD	Disabled
27	PAD1	KWAD1	AN1	—	—	V_{DDA}	PER1AD/PPS1AD	Disabled
28	PAD9	KWAD9	AN9	ACMPO	—	V_{DDA}	PER0AD/PPS0AD	Disabled
29	PAD2	KWAD2	AN2	—	—	V_{DDA}	PER1AD/PPS1AD	Disabled

Table 1-18. 48-Pin LQFP Pinout for S12GA48 and S12GA64

	Function <----lowest-----PRIORITY-----highest---->					Power Supply	Internal Pull Resistor	
Package Pin	Pin	2nd Func.	3rd Func.	4th Func	5th Func		CTRL	Reset State
30	PAD10	KWAD10	AN10	ACMPP		V_{DDA}	PER0AD/PPS0AD	Disabled
31	PAD3	KWAD3	AN3	—	—	V_{DDA}	PER1AD/PPS1AD	Disabled
32	PAD11	KWAD11	AN11	ACMPM		V_{DDA}	PER0AD/PPS0AD	Disabled
33	PAD4	KWAD4	AN4	—	—	V_{DDA}	PER1AD/PPS1AD	Disabled
34	PAD5	KWAD5	AN5	—	—	V_{DDA}	PER1AD/PPS0AD	Disabled
35	PAD6	KWAD6	AN6	—	—	V_{DDA}	PER1AD/PPS1AD	Disabled
36	PAD7	KWAD7	AN7	—	—	V_{DDA}	PER1AD/PPS1AD	Disabled
37	VDDA	VRH	—	—	—	—	—	—
38	VSSA	—	—	—	—	—	—	—
39	PS0	RXD0	—	—	—	V_{DDX}	PERS/PPSS	Up
40	PS1	TXD0	—	—	—	V_{DDX}	PERS/PPSS	Up
41	PS2	RXD1	—	—	—	V_{DDX}	PERS/PPSS	Up
42	PS3	TXD1	—	—	—	V_{DDX}	PERS/PPSS	Up
43	PS4	MISO0	—	—	—	V_{DDX}	PERS/PPSS	Up
44	PS5	MOSI0	—	—	—	V_{DDX}	PERS/PPSS	Up
45	PS6	SCK0	—	—	—	V_{DDX}	PERS/PPSS	Up
46	PS7	API_EXTCLK	ECLK	$\overline{SS0}$	—	V_{DDX}	PERS/PPSS	Up
47	PM0	RXCAN	—	—	—	V_{DDX}	PERM/PPSM	Disabled
48	PM1	TXCAN	—	—	—	V_{DDX}	PERM/PPSM	Disabled

[1] The regular I/O characteristics (see Section A.2, “I/O Characteristics”) apply if the EXTAL/XTAL function is disabled

1.8.5.2 Pinout 64-Pin LQFP

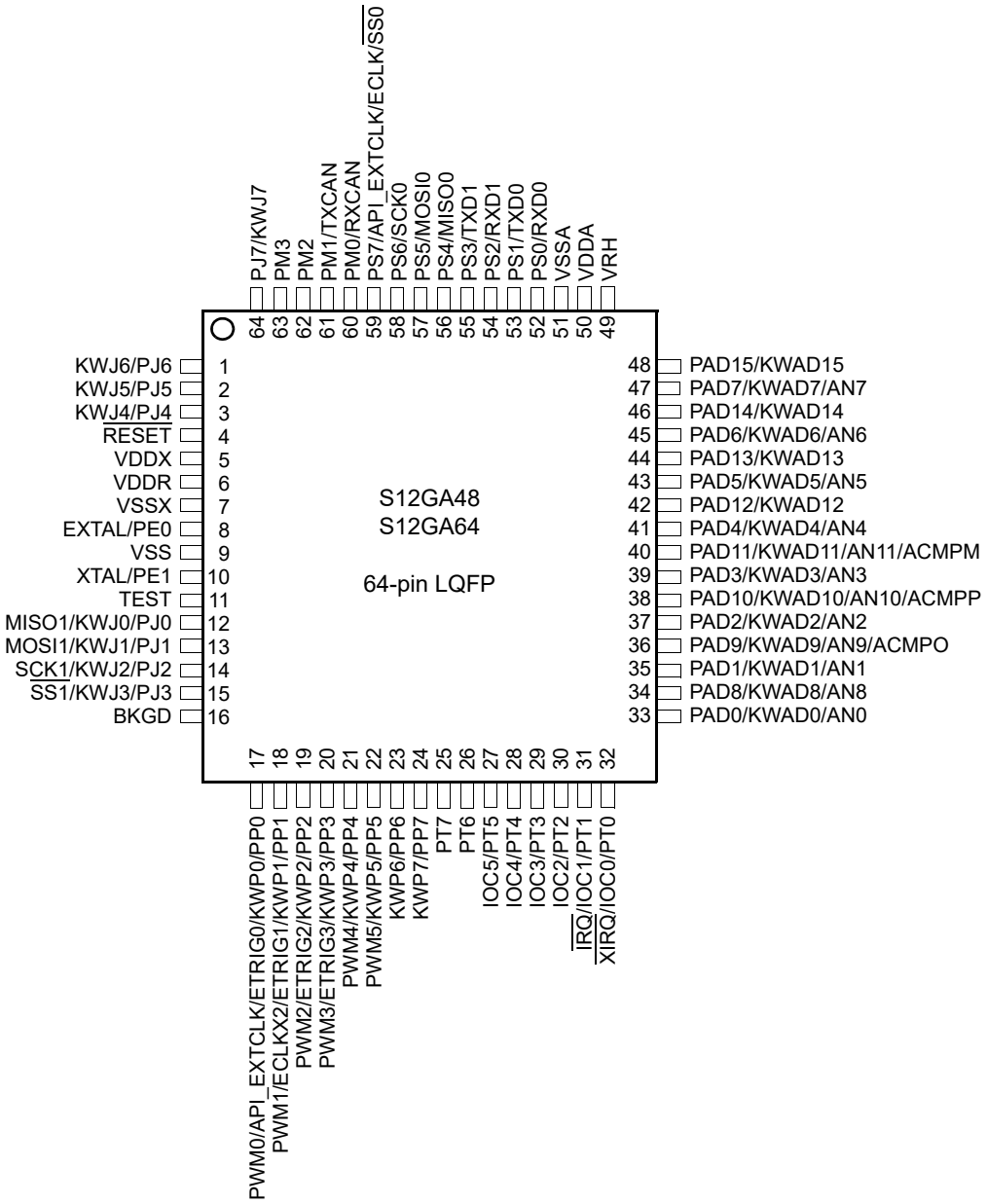

Figure 1-14. 64-Pin LQFP Pinout for S12GA48 and S12GA64

Table 1-19. 64-Pin LQFP Pinout for S12GA48 and S12GA64

	Function <----lowest-----PRIORITY-----highest---->					Power Supply	Internal Pull Resistor	
Package Pin	Pin	2nd Func.	3rd Func.	4th Func	5th Func		CTRL	Reset State
1	PJ6	KWJ6	—	—	—	V_{DDX}	PERJ/PPSJ	Up
2	PJ5	KWJ5	—	—	—	V_{DDX}	PERJ/PPSJ	Up
3	PJ4	KWJ4	—	—	—	V_{DDX}	PERJ/PPSJ	Up
4	RESET	—	—	—	—	V_{DDX}	PULLUP	
5	VDDX	—	—	—	—	—	—	—
6	VDDR	—	—	—	—	—	—	—
7	VSSX	—	—	—	—	—	—	—
8	PE0[1]	EXTAL	—	—	—	V_{DDX}	PUCR/PDPEE	Down
9	VSS	—	—	—	—	—	—	—
10	PE1[1]	XTAL	—	—	—	V_{DDX}	PUCR/PDPEE	Down
11	TEST	—	—	—	—	N.A.	$\overline{\text{RESET}}$ pin	Down
12	PJ0	KWJ0	MISO1	—	—	V_{DDX}	PERJ/PPSJ	Up
13	PJ1	KWJ1	MOSI1	—	—	V_{DDX}	PERJ/PPSJ	Up
14	PJ2	KWJ2	SCK1	—	—	V_{DDX}	PERJ/PPSJ	Up
15	PJ3	KWJ3	$\overline{\text{SS1}}$	—	—	V_{DDX}	PERJ/PPSJ	Up
16	BKGD	MODC	—	—	—	V_{DDX}	PUCR/BKPUE	Up
17	PP0	KWP0	ETRIG0	API_EXTCLK	PWM0	V_{DDX}	PERP/PPSP	Disabled
18	PP1	KWP1	ETRIG1	ECLKX2	PWM1	V_{DDX}	PERP/PPSP	Disabled
19	PP2	KWP2	ETRIG2	PWM2	—	V_{DDX}	PERP/PPSP	Disabled
20	PP3	KWP3	ETRIG3	PWM3	—	V_{DDX}	PERP/PPSP	Disabled
21	PP4	KWP4	PWM4	—	—	V_{DDX}	PERP/PPSP	Disabled
22	PP5	KWP5	PWM5	—	—	V_{DDX}	PERP/PPSP	Disabled
23	PP6	KWP6	—	—	—	V_{DDX}	PERP/PPSP	Disabled
24	PP7	KWP7	—	—	—	V_{DDX}	PERP/PPSP	Disabled
25	PT7	—	—	—	—	V_{DDX}	PERT/PPST	Disabled
26	PT6	—	—	—	—	V_{DDX}	PERT/PPST	Disabled
27	PT5	IOC5	—	—	—	V_{DDX}	PERT/PPST	Disabled

Table 1-19. 64-Pin LQFP Pinout for S12GA48 and S12GA64

	Function <----lowest-----PRIORITY-----highest---->					Power Supply	Internal Pull Resistor	
Package Pin	Pin	2nd Func.	3rd Func.	4th Func	5th Func		CTRL	Reset State
28	PT4	IOC4	—	—	—	V_{DDX}	PERT/PPST	Disabled
29	PT3	IOC3	—	—	—	V_{DDX}	PERT/PPST	Disabled
30	PT2	IOC2	—	—	—	V_{DDX}	PERT/PPST	Disabled
31	PT1	IOC1	$\overline{IRQ}$	—	—	V_{DDX}	PERT/PPST	Disabled
32	PT0	IOC0	$\overline{XIRQ}$	—	—	V_{DDX}	PERT/PPST	Disabled
33	PAD0	KWAD0	AN0	—	—	V_{DDA}	PER1AD/PPS1AD	Disabled
34	PAD8	KWAD8	AN8	—	—	V_{DDA}	PER0AD/PPS0AD	Disabled
35	PAD1	KWAD1	AN1	—	—	V_{DDA}	PER1AD/PPS1AD	Disabled
36	PAD9	KWAD9	AN9	ACMPO	—	V_{DDA}	PER0ADPPS0AD	Disabled
37	PAD2	KWAD2	AN2	—	—	V_{DDA}	PER1AD/PPS1AD	Disabled
38	PAD10	KWAD10	AN10	ACMPP		V_{DDA}	PER0AD/PPS0AD	Disabled
39	PAD3	KWAD3	AN3	—	—	V_{DDA}	PER1AD/PPS1AD	Disabled
40	PAD11	KWAD11	AN11	ACMPM		V_{DDA}	PER0AD/PPS0AD	Disabled
41	PAD4	KWAD4	AN4	—	—	V_{DDA}	PER1AD/PPS1AD	Disabled
42	PAD12	KWAD12	—	—	—	V_{DDA}	PER0AD/PPS0AD	Disabled
43	PAD5	KWAD5	AN5	—	—	V_{DDA}	PER1AD/PPS1AD	Disabled
44	PAD13	KWAD13	—	—	—	V_{DDA}	PER0AD/PPS0AD	Disabled
45	PAD6	KWAD6	AN6	—	—	V_{DDA}	PER1AD/PPS1AD	Disabled
46	PAD14	KWAD14	—	—	—	V_{DDA}	PER0AD/PPS0AD	Disabled
47	PAD7	KWAD7	AN7	—	—	V_{DDA}	PER1AD/PPS1AD	Disabled
48	PAD15	KWAD15	—	—	—	V_{DDA}	PER0AD/PPS0AD	Disabled
49	VRH	—	—	—	—	—	—	—
50	VDDA	—	—	—	—	—	—	—
51	VSSA	—	—	—	—	—	—	—
52	PS0	RXD0	—	—	—	V_{DDX}	PERS/PPSS	Up
53	PS1	TXD0	—	—	—	V_{DDX}	PERS/PPSS	Up
54	PS2	RXD1	—	—	—	V_{DDX}	PERS/PPSS	Up
55	PS3	TXD1	—	—	—	V_{DDX}	PERS/PPSS	Up
56	PS4	MISO0	—	—	—	V_{DDX}	PERS/PPSS	Up

Table 1-19. 64-Pin LQFP Pinout for S12GA48 and S12GA64

	Function <----lowest-----PRIORITY-----highest---->					Power Supply	Internal Pull Resistor	
Package Pin	Pin	2nd Func.	3rd Func.	4th Func	5th Func		CTRL	Reset State
57	PS5	MOSI0	—	—	—	V_{DDX}	PERS/PPSS	Up
58	PS6	SCK0	—	—	—	V_{DDX}	PERS/PPSS	Up
59	PS7	API_EXTCLK	ECLK	$\overline{SS0}$	—	V_{DDX}	PERS/PPSS	Up
60	PM0	RXCAN	—	—	—	V_{DDX}	PERM/PPSM	Disabled
61	PM1	TXCAN	—	—	—	V_{DDX}	PERM/PPSM	Disabled
62	PM2	—	—	—	—	V_{DDX}	PERM/PPSM	Disabled
63	PM3	—	—	—	—	V_{DDX}	PERM/PPSM	Disabled
64	PJ7	KWJ7	—	—	—	V_{DDX}	PERJ/PPSJ	Up

[1] The regular I/O characteristics (see Section A.2, “I/O Characteristics”) apply if the EXTAL/XTAL function is disabled

1.8.6 S12G96 and S12G128

1.8.6.1 Pinout 48-Pin LQFP

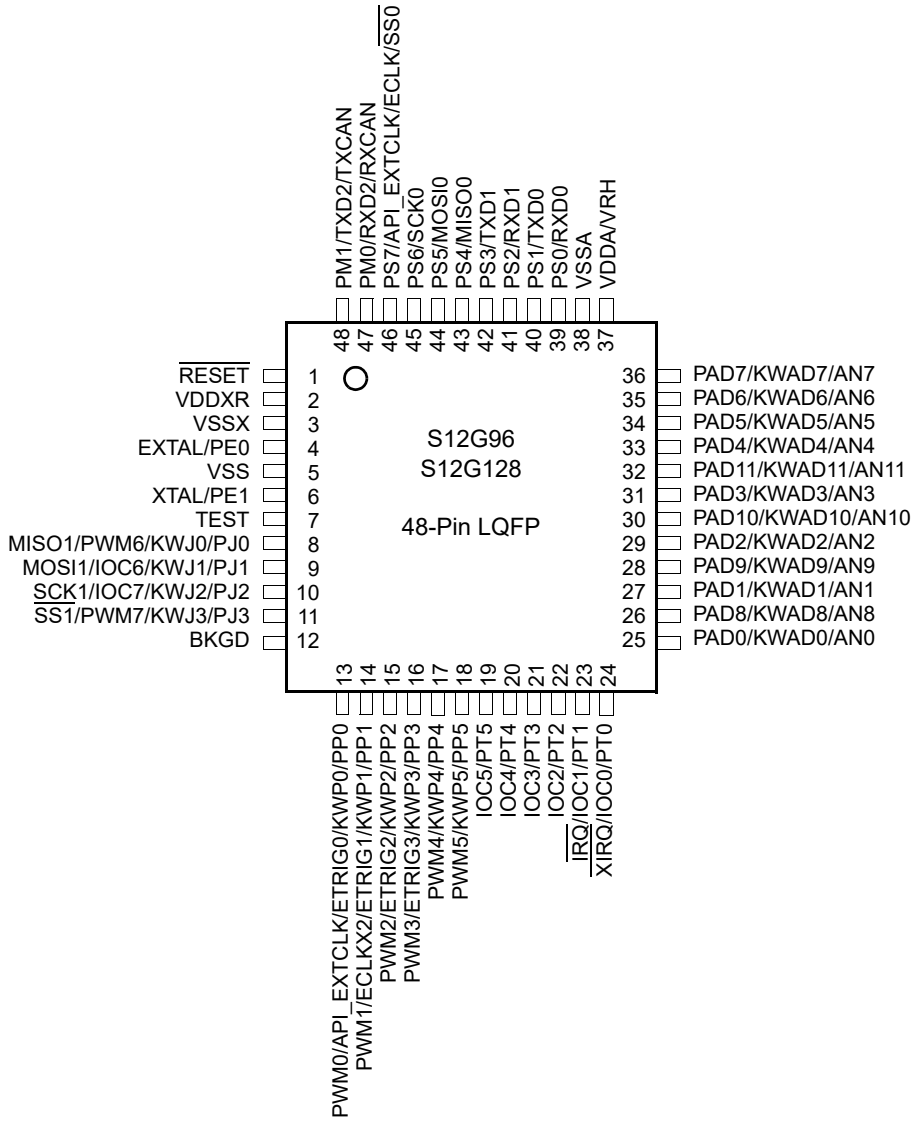

Figure 1-15. 48-Pin LQFP Pinout for S12G96 and S12G128

Table 1-20. 48-Pin LQFP Pinout for S12G96 and S12G128

	Function <----lowest-----PRIORITY-----highest---->					Power Supply	Internal Pull Resistor	
Package Pin	Pin	2nd Func.	3rd Func.	4th Func	5th Func		CTRL	Reset State
1	RESET	—	—	—	—	V_{DDX}	PULLUP	

Table 1-20. 48-Pin LQFP Pinout for S12G96 and S12G128

	Function <----lowest-----PRIORITY-----highest---->					Power Supply	Internal Pull Resistor	
Package Pin	Pin	2nd Func.	3rd Func.	4th Func	5th Func		CTRL	Reset State
2	VDDXR	—	—	—	—	—	—	—
3	VSSX	—	—	—	—	—	—	—
4	PE0[1]	EXTAL	—	—	—	V_{DDX}	PUCR/PDPEE	Down
5	VSS	—	—	—	—	—	—	—
6	PE1[1]	XTAL	—	—	—	V_{DDX}	PUCR/PDPEE	Down
7	TEST	—	—	—	—	N.A.	$\overline{\text{RESET}}$ pin	Down
8	PJ0	KWJ0	PWM6	MISO1	—	V_{DDX}	PERJ/PPSJ	Up
9	PJ1	KWJ1	IOC6	MOSI1	—	V_{DDX}	PERJ/PPSJ	Up
10	PJ2	KWJ2	IOC7	SCK1	—	V_{DDX}	PERJ/PPSJ	Up
11	PJ3	KWJ3	PWM7	$\overline{\text{SS1}}$	—	V_{DDX}	PERJ/PPSJ	Up
12	BKGD	MODC	—	—	—	V_{DDX}	PUCR/BKPUE	Up
13	PP0	KWP0	ETRIG0	API_EXTCLK	PWM0	V_{DDX}	PERP/PPSP	Disabled
14	PP1	KWP1	ETRIG1	ECLKX2	PWM1	V_{DDX}	PERP/PPSP	Disabled
15	PP2	KWP2	ETRIG2	PWM2	—	V_{DDX}	PERP/PPSP	Disabled
16	PP3	KWP3	ETRIG3	PWM3	—	V_{DDX}	PERP/PPSP	Disabled
17	PP4	KWP4	PWM4	—	—	V_{DDX}	PERP/PPSP	Disabled
18	PP5	KWP5	PWM5	—	—	V_{DDX}	PERP/PPSP	Disabled
19	PT5	IOC5	—	—	—	V_{DDX}	PERT/PPST	Disabled
20	PT4	IOC4	—	—	—	V_{DDX}	PERT/PPST	Disabled
21	PT3	IOC3	—	—	—	V_{DDX}	PERT/PPST	Disabled
22	PT2	IOC2	—	—	—	V_{DDX}	PERT/PPST	Disabled
23	PT1	IOC1	$\overline{\text{IRQ}}$	—	—	V_{DDX}	PERT/PPST	Disabled
24	PT0	IOC0	$\overline{\text{XIRQ}}$	—	—	V_{DDX}	PERT/PPST	Disabled
25	PAD0	KWAD0	AN0	—	—	V_{DDA}	PER1AD/PPS1AD	Disabled
26	PAD8	KWAD8	AN8	—	—	V_{DDA}	PER0AD/PPS0AD	Disabled
27	PAD1	KWAD1	AN1	—	—	V_{DDA}	PER1AD/PPS1AD	Disabled
28	PAD9	KWAD9	AN9		—	V_{DDA}	PER0AD/PPS0AD	Disabled
29	PAD2	KWAD2	AN2	—	—	V_{DDA}	PER1AD/PPS1AD	Disabled

Table 1-20. 48-Pin LQFP Pinout for S12G96 and S12G128

	Function <----lowest-----PRIORITY-----highest---->					Power Supply	Internal Pull Resistor	
Package Pin	Pin	2nd Func.	3rd Func.	4th Func	5th Func		CTRL	Reset State
30	PAD10	KWAD10	AN10			V_{DDA}	PER0AD/PPS0AD	Disabled
31	PAD3	KWAD3	AN3	—	—	V_{DDA}	PER1AD/PPS1AD	Disabled
32	PAD11	KWAD11	AN11	—	—	V_{DDA}	PER0AD/PPS0AD	Disabled
33	PAD4	KWAD4	AN4	—	—	V_{DDA}	PER1AD/PPS1AD	Disabled
34	PAD5	KWAD5	AN5	—	—	V_{DDA}	PER1AD/PPS0AD	Disabled
35	PAD6	KWAD6	AN6	—	—	V_{DDA}	PER1AD/PPS1AD	Disabled
36	PAD7	KWAD7	AN7	—	—	V_{DDA}	PER1AD/PPS1AD	Disabled
37	VDDA	VRH	—	—	—	—	—	—
38	VSSA	—	—	—	—	—	—	—
39	PS0	RXD0	—	—	—	V_{DDX}	PERS/PPSS	Up
40	PS1	TXD0	—	—	—	V_{DDX}	PERS/PPSS	Up
41	PS2	RXD1	—	—	—	V_{DDX}	PERS/PPSS	Up
42	PS3	TXD1	—	—	—	V_{DDX}	PERS/PPSS	Up
43	PS4	MISO0	—	—	—	V_{DDX}	PERS/PPSS	Up
44	PS5	MOSI0	—	—	—	V_{DDX}	PERS/PPSS	Up
45	PS6	SCK0	—	—	—	V_{DDX}	PERS/PPSS	Up
46	PS7	API_EXTCLK	ECLK	$\overline{SS0}$	—	V_{DDX}	PERS/PPSS	Up
47	PM0	RXD2	RXCAN	—	—	V_{DDX}	PERM/PPSM	Disabled
48	PM1	TXD2	TXCAN	—	—	V_{DDX}	PERM/PPSM	Disabled

[1] The regular I/O characteristics (see Section A.2, “I/O Characteristics”) apply if the EXTAL/XTAL function is disabled

1.8.6.2 Pinout 64-Pin LQFP

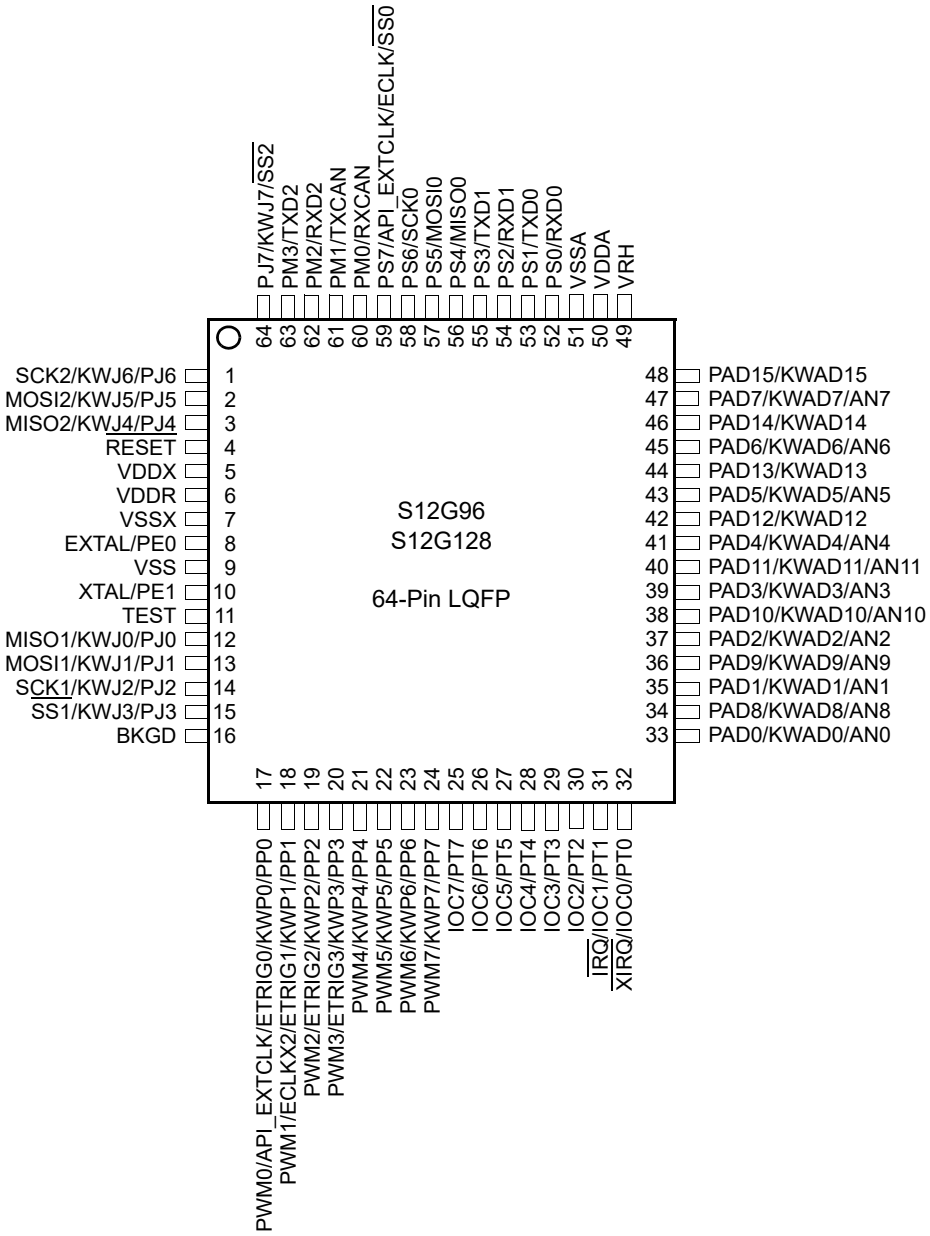

Figure 1-16. 64-Pin LQFP Pinout for S12G96 and S12G128

Table 1-21. 64-Pin LQFP Pinout for S12G96 and S12G128

	Function <----lowest-----PRIORITY-----highest---->					Power Supply	Internal Pull Resistor	
Package Pin	Pin	2nd Func.	3rd Func.	4th Func	5th Func		CTRL	Reset State
1	PJ6	KWJ6	SCK2	—	—	V_{DDX}	PERJ/PPSJ	Up
2	PJ5	KWJ5	MOSI2	—	—	V_{DDX}	PERJ/PPSJ	Up
3	PJ4	KWJ4	MISO2	—	—	V_{DDX}	PERJ/PPSJ	Up
4	RESET	—	—	—	—	V_{DDX}	PULLUP	
5	VDDX	—	—	—	—	—	—	—
6	VDDR	—	—	—	—	—	—	—
7	VSSX	—	—	—	—	—	—	—
8	PE0[1]	EXTAL	—	—	—	V_{DDX}	PUCR/PDPEE	Down
9	VSS	—	—	—	—	—	—	—
10	PE1[1]	XTAL	—	—	—	V_{DDX}	PUCR/PDPEE	Down
11	TEST	—	—	—	—	N.A.	$\overline{\text{RESET}}$ pin	Down
12	PJ0	KWJ0	MISO1	—	—	V_{DDX}	PERJ/PPSJ	Up
13	PJ1	KWJ1	MOSI1	—	—	V_{DDX}	PERJ/PPSJ	Up
14	PJ2	KWJ2	SCK1	—	—	V_{DDX}	PERJ/PPSJ	Up
15	PJ3	KWJ3	$\overline{\text{SS1}}$	—	—	V_{DDX}	PERJ/PPSJ	Up
16	BKGD	MODC	—	—	—	V_{DDX}	PUCR/BKPUE	Up
17	PP0	KWP0	ETRIG0	API_EXTCLK	PWM0	V_{DDX}	PERP/PPSP	Disabled
18	PP1	KWP1	ETRIG1	ECLKX2	PWM1	V_{DDX}	PERP/PPSP	Disabled
19	PP2	KWP2	ETRIG2	PWM2	—	V_{DDX}	PERP/PPSP	Disabled
20	PP3	KWP3	ETRIG3	PWM3	—	V_{DDX}	PERP/PPSP	Disabled
21	PP4	KWP4	PWM4	—	—	V_{DDX}	PERP/PPSP	Disabled
22	PP5	KWP5	PWM5	—	—	V_{DDX}	PERP/PPSP	Disabled
23	PP6	KWP6	PWM6	—	—	V_{DDX}	PERP/PPSP	Disabled
24	PP7	KWP7	PWM7	—	—	V_{DDX}	PERP/PPSP	Disabled
25	PT7	IOC7	—	—	—	V_{DDX}	PERT/PPST	Disabled
26	PT6	IOC6	—	—	—	V_{DDX}	PERT/PPST	Disabled
27	PT5	IOC5	—	—	—	V_{DDX}	PERT/PPST	Disabled

Table 1-21. 64-Pin LQFP Pinout for S12G96 and S12G128

	Function <----lowest-----PRIORITY-----highest---->					Power Supply	Internal Pull Resistor	
Package Pin	Pin	2nd Func.	3rd Func.	4th Func	5th Func		CTRL	Reset State
28	PT4	IOC4	—	—	—	V_{DDX}	PERT/PPST	Disabled
29	PT3	IOC3	—	—	—	V_{DDX}	PERT/PPST	Disabled
30	PT2	IOC2	—	—	—	V_{DDX}	PERT/PPST	Disabled
31	PT1	IOC1	$\overline{IRQ}$	—	—	V_{DDX}	PERT/PPST	Disabled
32	PT0	IOC0	$\overline{XIRQ}$	—	—	V_{DDX}	PERT/PPST	Disabled
33	PAD0	KWAD0	AN0	—	—	V_{DDA}	PER1AD/PPS1AD	Disabled
34	PAD8	KWAD8	AN8	—	—	V_{DDA}	PER0AD/PPS0AD	Disabled
35	PAD1	KWAD1	AN1	—	—	V_{DDA}	PER1AD/PPS1AD	Disabled
36	PAD9	KWAD9	AN9	—	—	V_{DDA}	PER0ADPPS0AD	Disabled
37	PAD2	KWAD2	AN2	—	—	V_{DDA}	PER1AD/PPS1AD	Disabled
38	PAD10	KWAD10	AN10	—	—	V_{DDA}	PER0AD/PPS0AD	Disabled
39	PAD3	KWAD3	AN3	—	—	V_{DDA}	PER1AD/PPS1AD	Disabled
40	PAD11	KWAD11	AN11	—	—	V_{DDA}	PER0AD/PPS0AD	Disabled
41	PAD4	KWAD4	AN4	—	—	V_{DDA}	PER1AD/PPS1AD	Disabled
42	PAD12	KWAD12		—	—	V_{DDA}	PER0AD/PPS0AD	Disabled
43	PAD5	KWAD5	AN5	—	—	V_{DDA}	PER1AD/PPS1AD	Disabled
44	PAD13	KWAD13		—	—	V_{DDA}	PER0AD/PPS0AD	Disabled
45	PAD6	KWAD6	AN6	—	—	V_{DDA}	PER1AD/PPS1AD	Disabled
46	PAD14	KWAD14		—	—	V_{DDA}	PER0AD/PPS0AD	Disabled
47	PAD7	KWAD7	AN7	—	—	V_{DDA}	PER1AD/PPS1AD	Disabled
48	PAD15	KWAD15		—	—	V_{DDA}	PER0AD/PPS0AD	Disabled
49	VRH	—	—	—	—	—	—	—
50	VDDA	—	—	—	—	—	—	—
51	VSSA	—	—	—	—	—	—	—
52	PS0	RXD0	—	—	—	V_{DDX}	PERS/PPSS	Up
53	PS1	TXD0	—	—	—	V_{DDX}	PERS/PPSS	Up
54	PS2	RXD1	—	—	—	V_{DDX}	PERS/PPSS	Up
55	PS3	TXD1	—	—	—	V_{DDX}	PERS/PPSS	Up
56	PS4	MISO0	—	—	—	V_{DDX}	PERS/PPSS	Up

Table 1-21. 64-Pin LQFP Pinout for S12G96 and S12G128

	Function <----lowest-----PRIORITY-----highest---->					Power Supply	Internal Pull Resistor	
Package Pin	**Pin**	**2nd Func.**	**3rd Func.**	**4th Func**	**5th Func**		**CTRL**	**Reset State**
57	PS5	MOSI0	—	—	—	V_{DDX}	PERS/PPSS	Up
58	PS6	SCK0	—	—	—	V_{DDX}	PERS/PPSS	Up
59	PS7	API_EXTCLK	ECLK	$\overline{SS0}$	—	V_{DDX}	PERS/PPSS	Up
60	PM0	RXCAN	—	—	—	V_{DDX}	PERM/PPSM	Disabled
61	PM1	TXCAN	—	—	—	V_{DDX}	PERM/PPSM	Disabled
62	PM2	RXD2	—	—	—	V_{DDX}	PERM/PPSM	Disabled
63	PM3	TXD2	—	—	—	V_{DDX}	PERM/PPSM	Disabled
64	PJ7	KWJ7	$\overline{SS2}$	—	—	V_{DDX}	PERJ/PPSJ	Up

[1] The regular I/O characteristics (see Section A.2, “I/O Characteristics”) apply if the EXTAL/XTAL function is disabled

1.8.6.3 Pinout 100-Pin LQFP

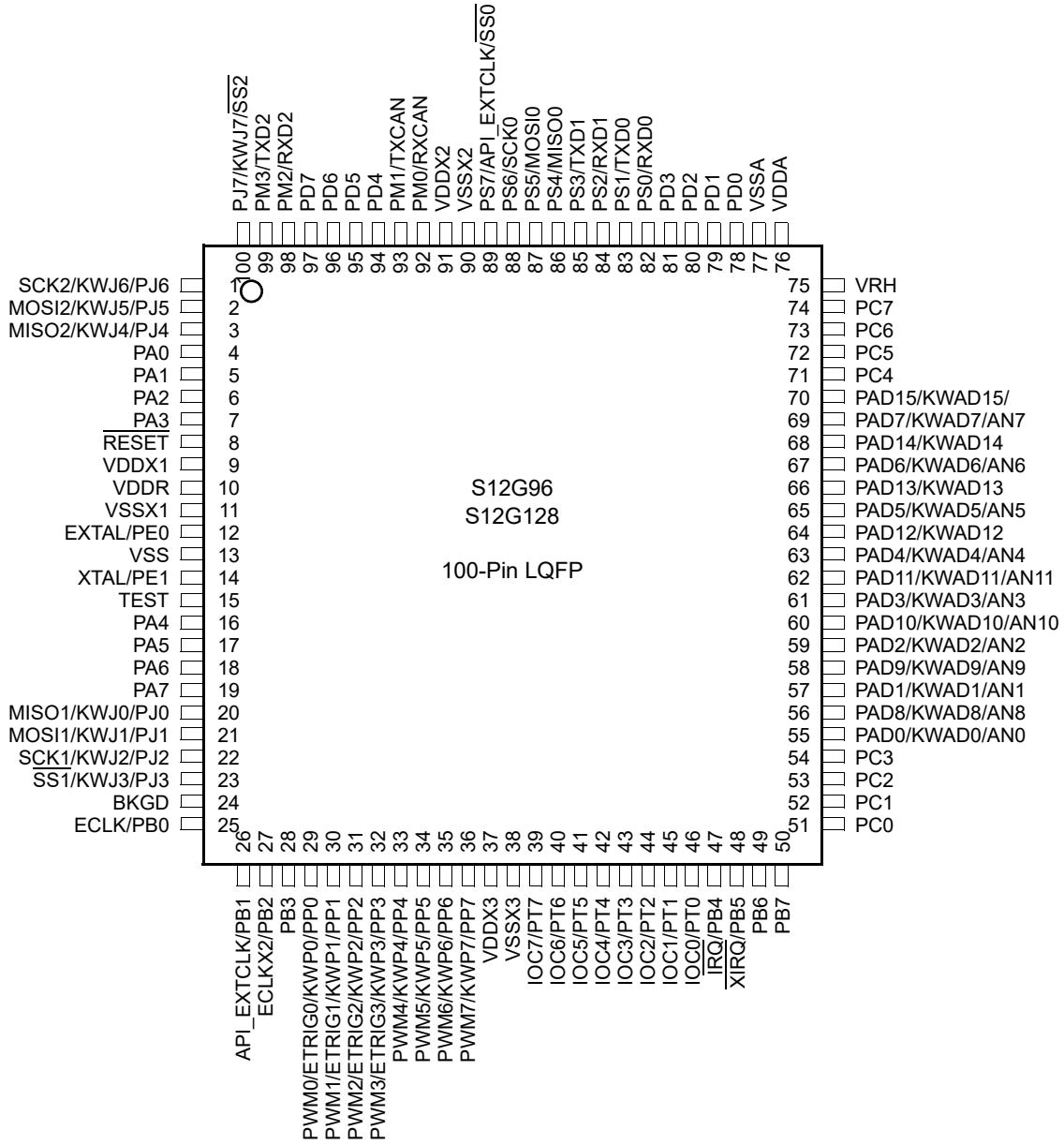

Figure 1-17. 100-Pin LQFP Pinout for S12G96 and S12G128

Table 1-22. 100-Pin LQFP Pinout for S12G96 and S12G128

	Function <----lowest-----PRIORITY-----highest---->				Power Supply	Internal Pull Resistor	
Package Pin	Pin	2nd Func.	3rd Func.	4th Func.		CTRL	Reset State
1	PJ6	KWJ6	SCK2	—	V_{DDX}	PERJ/PPSJ	Up
2	PJ5	KWJ5	MOSI2	—	V_{DDX}	PERJ/PPSJ	Up
3	PJ4	KWJ4	MISO2	—	V_{DDX}	PERJ/PPSJ	Up
4	PA0	—	—	—	V_{DDX}	PUCR/PUPAE	Disabled
5	PA1	—	—	—	V_{DDX}	PUCR/PUPAE	Disabled
6	PA2	—	—	—	V_{DDX}	PUCR/PUPAE	Disabled
7	PA3	—	—	—	V_{DDX}	PUCR/PUPAE	Disabled
8	RESET	—	—	—	V_{DDX}	PULLUP	
9	VDDX1	—	—	—	—	—	—
10	VDDR	—	—	—	—	—	—
11	VSSX1	—	—	—	—	—	—
12	PE0[1]	EXTAL	—	—	V_{DDX}	PUCR/PDPEE	Down
13	VSS	—	—	—	—	—	—
14	PE1[1]	XTAL	—	—	V_{DDX}	PUCR/PDPEE	Down
15	TEST	—	—	—	N.A.	$\overline{\text{RESET}}$ pin	Down
16	PA4	—	—	—	V_{DDX}	PUCR/PUPAE	Disabled
17	PA5	—	—	—	V_{DDX}	PUCR/PUPAE	Disabled
18	PA6	—	—	—	V_{DDX}	PUCR/PUPAE	Disabled
19	PA7	—	—	—	V_{DDX}	PUCR/PUPAE	Disabled
20	PJ0	KWJ0	MISO1	—	V_{DDX}	PERJ/PPSJ	Up
21	PJ1	KWJ1	MOSI1	—	V_{DDX}	PERJ/PPSJ	Up
22	PJ2	KWJ2	SCK1	—	V_{DDX}	PERJ/PPSJ	Up
23	PJ3	KWJ3	$\overline{\text{SS1}}$	—	V_{DDX}	PERJ/PPSJ	Up
24	BKGD	MODC	—	—	V_{DDX}	PUCR/BKPUE	Up
25	PB0	ECLK	—	—	V_{DDX}	PUCR/PUPBE	Disabled
26	PB1	API_EXTCLK	—	—	V_{DDX}	PUCR/PUPBE	Disabled
27	PB2	ECLKX2	—	—	V_{DDX}	PUCR/PUPBE	Disabled

Table 1-22. 100-Pin LQFP Pinout for S12G96 and S12G128

	Function <----lowest-----PRIORITY-----highest---->				Power Supply	Internal Pull Resistor	
Package Pin	Pin	2nd Func.	3rd Func.	4th Func.		CTRL	Reset State
28	PB3	—	—	—	V_{DDX}	PUCR/PUPBE	Disabled
29	PP0	KWP0	ETRIG0	PWM0	V_{DDX}	PERP/PPSP	Disabled
30	PP1	KWP1	ETRIG1	PWM1	V_{DDX}	PERP/PPSP	Disabled
31	PP2	KWP2	ETRIG2	PWM2	V_{DDX}	PERP/PPSP	Disabled
32	PP3	KWP3	ETRIG3	PWM3	V_{DDX}	PERP/PPSP	Disabled
33	PP4	KWP4	PWM4	—	V_{DDX}	PERP/PPSP	Disabled
34	PP5	KWP5	PWM5	—	V_{DDX}	PERP/PPSP	Disabled
35	PP6	KWP6	PWM6	—	V_{DDX}	PERP/PPSP	Disabled
36	PP7	KWP7	PWM7	—	V_{DDX}	PERP/PPSP	Disabled
37	VDDX3	—	—	—	—	—	—
38	VSSX3	—	—	—	—	—	—
39	PT7	IOC7	—	—	V_{DDX}	PERT/PPST	Disabled
40	PT6	IOC6	—	—	V_{DDX}	PERT/PPST	Disabled
41	PT5	IOC5	—	—	V_{DDX}	PERT/PPST	Disabled
42	PT4	IOC4	—	—	V_{DDX}	PERT/PPST	Disabled
43	PT3	IOC3	—	—	V_{DDX}	PERT/PPST	Disabled
44	PT2	IOC2	—	—	V_{DDX}	PERT/PPST	Disabled
45	PT1	IOC1	—	—	V_{DDX}	PERT/PPST	Disabled
46	PT0	IOC0	—	—	V_{DDX}	PERT/PPST	Disabled
47	PB4	$\overline{\text{IRQ}}$	—	—	V_{DDX}	PUCR/PUPBE	Disabled
48	PB5	$\overline{\text{XIRQ}}$	—	—	V_{DDX}	PUCR/PUPBE	Disabled
49	PB6	—	—	—	V_{DDX}	PUCR/PUPBE	Disabled
50	PB7	—	—	—	V_{DDX}	PUCR/PUPBE	Disabled
51	PC0	—	—	—	V_{DDA}	PUCR/PUPCE	Disabled
52	PC1	—	—	—	V_{DDA}	PUCR/PUPCE	Disabled
53	PC2	—	—	—	V_{DDA}	PUCR/PUPCE	Disabled
54	PC3	—	—	—	V_{DDA}	PUCR/PUPCE	Disabled
55	PAD0	KWAD0	AN0	—	V_{DDA}	PER1AD/PPS1AD	Disabled
56	PAD8	KWAD8	AN8	—	V_{DDA}	PER0AD/PPS0AD	Disabled

Table 1-22. 100-Pin LQFP Pinout for S12G96 and S12G128

	Function <----lowest-----PRIORITY-----highest---->				Power Supply	Internal Pull Resistor	
Package Pin	Pin	2nd Func.	3rd Func.	4th Func.		CTRL	Reset State
57	PAD1	KWAD1	AN1	—	V_{DDA}	PER1AD/PPS1AD	Disabled
58	PAD9	KWAD9	AN9	—	V_{DDA}	PER0AD/PPS0AD	Disabled
59	PAD2	KWAD2	AN2	—	V_{DDA}	PER1AD/PPS1AD	Disabled
60	PAD10	KWAD10	AN10	—	V_{DDA}	PER0AD/PPS0AD	Disabled
61	PAD3	KWAD3	AN3	—	V_{DDA}	PER1AD/PPS1AD	Disabled
62	PAD11	KWAD11	AN11	—	V_{DDA}	PER0AD/PPS0AD	Disabled
63	PAD4	KWAD4	AN4	—	V_{DDA}	PER1AD/PPS1AD	Disabled
64	PAD12	KWAD12	—	—	V_{DDA}	PER0AD/PPS0AD	Disabled
65	PAD5	KWAD5	AN5	—	V_{DDA}	PER1AD/PPS1AD	Disabled
66	PAD13	KWAD13	—	—	V_{DDA}	PER0AD/PPS0AD	Disabled
67	PAD6	KWAD6	AN6	—	V_{DDA}	PER1AD/PPS1AD	Disabled
68	PAD14	KWAD14	—	—	V_{DDA}	PER0AD/PPS0AD	Disabled
69	PAD7	KWAD7	AN7	—	V_{DDA}	PER1AD/PPS1AD	Disabled
70	PAD15	KWAD15	—	—	V_{DDA}	PER0AD/PPS0AD	Disabled
71	PC4	—	—	—	V_{DDA}	PUCR/PUPCE	Disabled
72	PC5		—	—	V_{DDA}	PUCR/PUPCE	Disabled
73	PC6		—	—	V_{DDA}	PUCR/PUPCE	Disabled
74	PC7		—	—	V_{DDA}	PUCR/PUPCE	Disabled
75	VRH	—	—	—	—	—	—
76	VDDA	—	—	—	—	—	—
77	VSSA	—	—	—	—	—	—
78	PD0	—	—	—	V_{DDX}	PUCR/PUPDE	Disabled
79	PD1	—	—	—	V_{DDX}	PUCR/PUPDE	Disabled
80	PD2	—	—	—	V_{DDX}	PUCR/PUPDE	Disabled
81	PD3	—	—	—	V_{DDX}	PUCR/PUPDE	Disabled
82	PS0	RXD0	—	—	V_{DDX}	PERS/PPSS	Up
83	PS1	TXD0	—	—	V_{DDX}	PERS/PPSS	Up
84	PS2	RXD1	—	—	V_{DDX}	PERS/PPSS	Up
85	PS3	TXD1	—	—	V_{DDX}	PERS/PPSS	Up

Table 1-22. 100-Pin LQFP Pinout for S12G96 and S12G128

	Function <----lowest-----PRIORITY-----highest---->				Power Supply	Internal Pull Resistor	
Package Pin	Pin	2nd Func.	3rd Func.	4th Func.		CTRL	Reset State
86	PS4	MISO0	—	—	V_{DDX}	PERS/PPSS	Up
87	PS5	MOSI0	—	—	V_{DDX}	PERS/PPSS	Up
88	PS6	SCK0	—	—	V_{DDX}	PERS/PPSS	Up
89	PS7	API_EXTCLK	$\overline{SS0}$	—	V_{DDX}	PERS/PPSS	Up
90	VSSX2	—	—	—	—	—	—
91	VDDX2	—	—	—	—	—	—
92	PM0	RXCAN	—	—	V_{DDX}	PERM/PPSM	Disabled
93	PM1	TXCAN	—	—	V_{DDX}	PERM/PPSM	Disabled
94	PD4	—	—	—	V_{DDX}	PUCR/PUPDE	Disabled
95	PD5	—	—	—	V_{DDX}	PUCR/PUPDE	Disabled
96	PD6	—	—	—	V_{DDX}	PUCR/PUPDE	Disabled
97	PD7	—	—	—	V_{DDX}	PUCR/PUPDE	Disabled
98	PM2	RXD2	—	—	V_{DDX}	PERM/PPSM	Disabled
99	PM3	TXD2	—	—	V_{DDX}	PERM/PPSM	Disabled
100	PJ7	KWJ7	$\overline{SS2}$	—	V_{DDX}	PERJ/PPSJ	Up

[1] The regular I/O characteristics (see Section A.2, “I/O Characteristics”) apply if the EXTAL/XTAL function is disabled

1.8.7 S12GA96 and S12GA128

1.8.7.1 Pinout 48-Pin LQFP

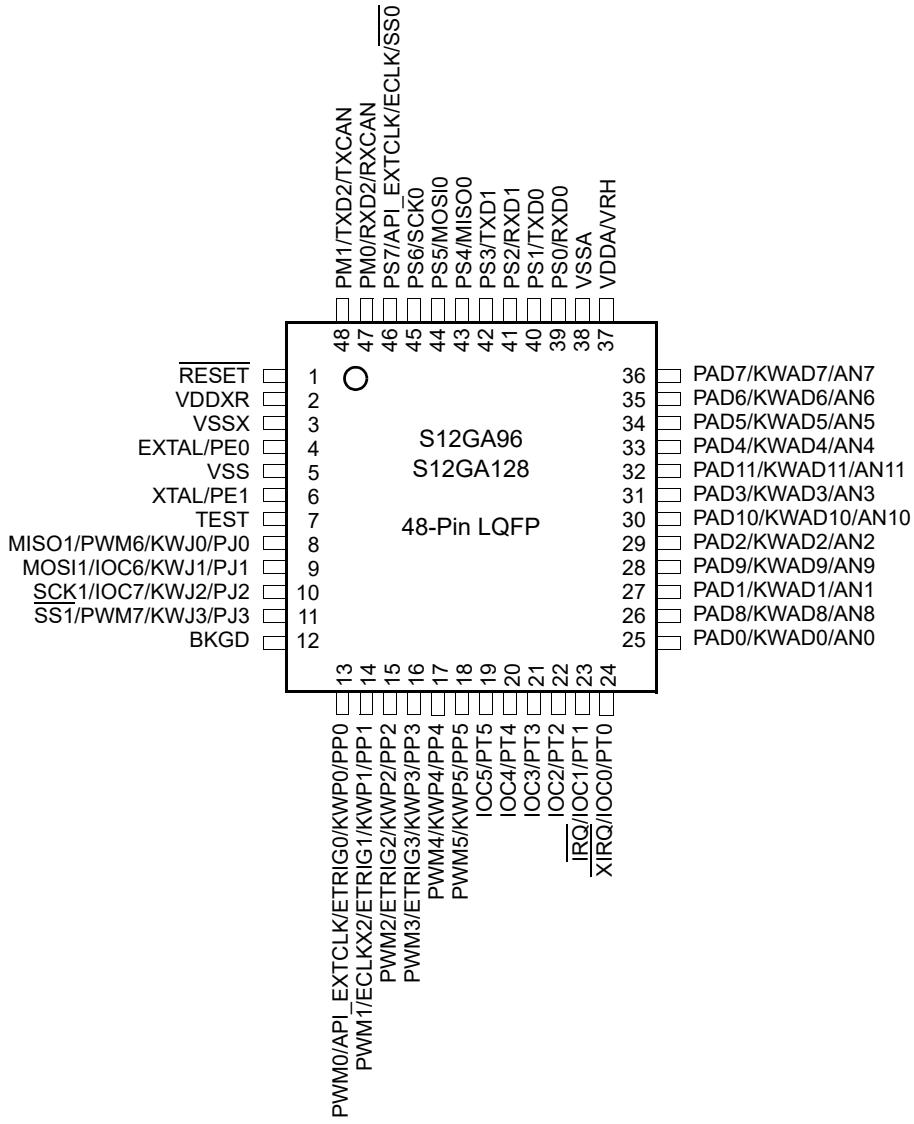

Figure 1-18. 48-Pin LQFP Pinout for S12GA96 and S12GA128

Table 1-23. 48-Pin LQFP Pinout for S12GA96 and S12GA128

	Function <----lowest-----PRIORITY-----highest---->					Power Supply	Internal Pull Resistor	
Package Pin	Pin	2nd Func.	3rd Func.	4th Func	5th Func		CTRL	Reset State
1	RESET	—	—	—	—	V_{DDX}	PULLUP	

Table 1-23. 48-Pin LQFP Pinout for S12GA96 and S12GA128

	Function <----lowest-----PRIORITY-----highest---->					Power Supply	Internal Pull Resistor	
Package Pin	Pin	2nd Func.	3rd Func.	4th Func	5th Func		CTRL	Reset State
2	VDDXR	—	—	—	—	—	—	—
3	VSSX	—	—	—	—	—	—	—
4	PE0[1]	EXTAL	—	—	—	V_{DDX}	PUCR/PDPEE	Down
5	VSS	—	—	—	—	—	—	—
6	PE1[1]	XTAL	—	—	—	V_{DDX}	PUCR/PDPEE	Down
7	TEST	—	—	—	—	N.A.	$\overline{\text{RESET}}$ pin	Down
8	PJ0	KWJ0	PWM6	MISO1	—	V_{DDX}	PERJ/PPSJ	Up
9	PJ1	KWJ1	IOC6	MOSI1	—	V_{DDX}	PERJ/PPSJ	Up
10	PJ2	KWJ2	IOC7	SCK1	—	V_{DDX}	PERJ/PPSJ	Up
11	PJ3	KWJ3	PWM7	$\overline{\text{SS1}}$	—	V_{DDX}	PERJ/PPSJ	Up
12	BKGD	MODC	—	—	—	V_{DDX}	PUCR/BKPUE	Up
13	PP0	KWP0	ETRIG0	API_EXTCLK	PWM0	V_{DDX}	PERP/PPSP	Disabled
14	PP1	KWP1	ETRIG1	ECLKX2	PWM1	V_{DDX}	PERP/PPSP	Disabled
15	PP2	KWP2	ETRIG2	PWM2	—	V_{DDX}	PERP/PPSP	Disabled
16	PP3	KWP3	ETRIG3	PWM3	—	V_{DDX}	PERP/PPSP	Disabled
17	PP4	KWP4	PWM4	—	—	V_{DDX}	PERP/PPSP	Disabled
18	PP5	KWP5	PWM5	—	—	V_{DDX}	PERP/PPSP	Disabled
19	PT5	IOC5	—	—	—	V_{DDX}	PERT/PPST	Disabled
20	PT4	IOC4	—	—	—	V_{DDX}	PERT/PPST	Disabled
21	PT3	IOC3	—	—	—	V_{DDX}	PERT/PPST	Disabled
22	PT2	IOC2	—	—	—	V_{DDX}	PERT/PPST	Disabled
23	PT1	IOC1	$\overline{\text{IRQ}}$	—	—	V_{DDX}	PERT/PPST	Disabled
24	PT0	IOC0	$\overline{\text{XIRQ}}$	—	—	V_{DDX}	PERT/PPST	Disabled
25	PAD0	KWAD0	AN0	—	—	V_{DDA}	PER1AD/PPS1AD	Disabled
26	PAD8	KWAD8	AN8	—	—	V_{DDA}	PER0AD/PPS0AD	Disabled
27	PAD1	KWAD1	AN1	—	—	V_{DDA}	PER1AD/PPS1AD	Disabled
28	PAD9	KWAD9	AN9		—	V_{DDA}	PER0AD/PPS0AD	Disabled
29	PAD2	KWAD2	AN2	—	—	V_{DDA}	PER1AD/PPS1AD	Disabled

Table 1-23. 48-Pin LQFP Pinout for S12GA96 and S12GA128

	Function <----lowest-----PRIORITY-----highest---->					Power Supply	Internal Pull Resistor	
Package Pin	Pin	2nd Func.	3rd Func.	4th Func	5th Func		CTRL	Reset State
30	PAD10	KWAD10	AN10			V_{DDA}	PER0AD/PPS0AD	Disabled
31	PAD3	KWAD3	AN3	—	—	V_{DDA}	PER1AD/PPS1AD	Disabled
32	PAD11	KWAD11	AN11	—	—	V_{DDA}	PER0AD/PPS0AD	Disabled
33	PAD4	KWAD4	AN4	—	—	V_{DDA}	PER1AD/PPS1AD	Disabled
34	PAD5	KWAD5	AN5	—	—	V_{DDA}	PER1AD/PPS0AD	Disabled
35	PAD6	KWAD6	AN6	—	—	V_{DDA}	PER1AD/PPS1AD	Disabled
36	PAD7	KWAD7	AN7	—	—	V_{DDA}	PER1AD/PPS1AD	Disabled
37	VDDA	VRH	—	—	—	—	—	—
38	VSSA	—	—	—	—	—	—	—
39	PS0	RXD0	—	—	—	V_{DDX}	PERS/PPSS	Up
40	PS1	TXD0	—	—	—	V_{DDX}	PERS/PPSS	Up
41	PS2	RXD1	—	—	—	V_{DDX}	PERS/PPSS	Up
42	PS3	TXD1	—	—	—	V_{DDX}	PERS/PPSS	Up
43	PS4	MISO0	—	—	—	V_{DDX}	PERS/PPSS	Up
44	PS5	MOSI0	—	—	—	V_{DDX}	PERS/PPSS	Up
45	PS6	SCK0	—	—	—	V_{DDX}	PERS/PPSS	Up
46	PS7	API_EXTCLK	ECLK	$\overline{SS0}$	—	V_{DDX}	PERS/PPSS	Up
47	PM0	RXD2	RXCAN	—	—	V_{DDX}	PERM/PPSM	Disabled
48	PM1	TXD2	TXCAN	—	—	V_{DDX}	PERM/PPSM	Disabled

[1] The regular I/O characteristics (see Section A.2, “I/O Characteristics”) apply if the EXTAL/XTAL function is disabled

1.8.7.2 Pinout 64-Pin LQFP

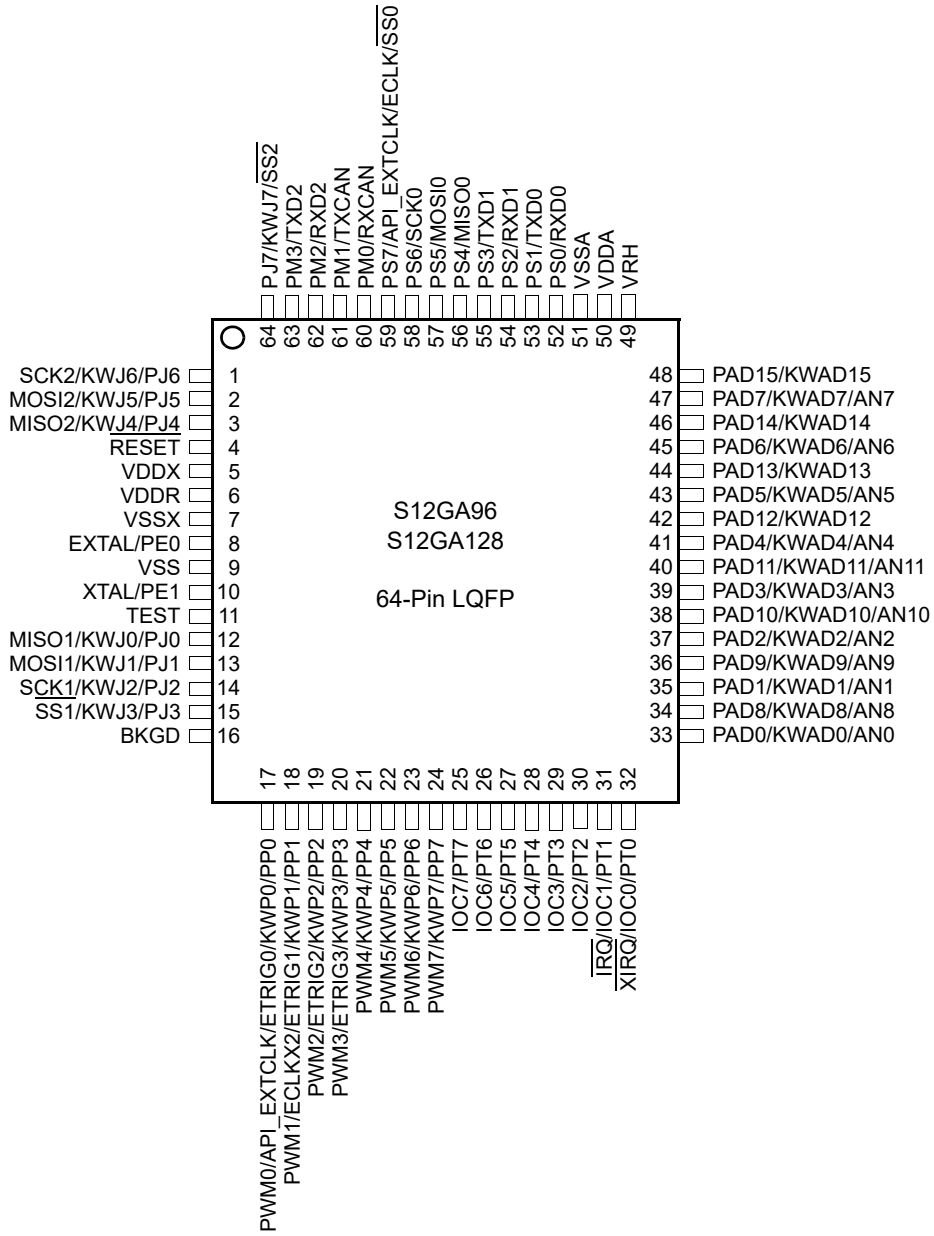

Figure 1-19. 64-Pin LQFP Pinout for S12GA96 and S12GA128

Table 1-24. 64-Pin LQFP Pinout for S12GA96 and S12GA128

	Function <----lowest-----PRIORITY-----highest---->					Power Supply	Internal Pull Resistor	
Package Pin	Pin	2nd Func.	3rd Func.	4th Func	5th Func		CTRL	Reset State
1	PJ6	KWJ6	SCK2	—	—	V_{DDX}	PERJ/PPSJ	Up
2	PJ5	KWJ5	MOSI2	—	—	V_{DDX}	PERJ/PPSJ	Up
3	PJ4	KWJ4	MISO2	—	—	V_{DDX}	PERJ/PPSJ	Up
4	RESET	—	—	—	—	V_{DDX}	PULLUP	
5	VDDX	—	—	—	—	—	—	—
6	VDDR	—	—	—	—	—	—	—
7	VSSX	—	—	—	—	—	—	—
8	PE0[1]	EXTAL	—	—	—	V_{DDX}	PUCR/PDPEE	Down
9	VSS	—	—	—	—	—	—	—
10	PE1[1]	XTAL	—	—	—	V_{DDX}	PUCR/PDPEE	Down
11	TEST	—	—	—	—	N.A.	$\overline{\text{RESET}}$ pin	Down
12	PJ0	KWJ0	MISO1	—	—	V_{DDX}	PERJ/PPSJ	Up
13	PJ1	KWJ1	MOSI1	—	—	V_{DDX}	PERJ/PPSJ	Up
14	PJ2	KWJ2	SCK1	—	—	V_{DDX}	PERJ/PPSJ	Up
15	PJ3	KWJ3	$\overline{\text{SS1}}$	—	—	V_{DDX}	PERJ/PPSJ	Up
16	BKGD	MODC	—	—	—	V_{DDX}	PUCR/BKPUE	Up
17	PP0	KWP0	ETRIG0	API_EXTCLK	PWM0	V_{DDX}	PERP/PPSP	Disabled
18	PP1	KWP1	ETRIG1	ECLKX2	PWM1	V_{DDX}	PERP/PPSP	Disabled
19	PP2	KWP2	ETRIG2	PWM2	—	V_{DDX}	PERP/PPSP	Disabled
20	PP3	KWP3	ETRIG3	PWM3	—	V_{DDX}	PERP/PPSP	Disabled
21	PP4	KWP4	PWM4	—	—	V_{DDX}	PERP/PPSP	Disabled
22	PP5	KWP5	PWM5	—	—	V_{DDX}	PERP/PPSP	Disabled
23	PP6	KWP6	PWM6	—	—	V_{DDX}	PERP/PPSP	Disabled
24	PP7	KWP7	PWM7	—	—	V_{DDX}	PERP/PPSP	Disabled
25	PT7	IOC7	—	—	—	V_{DDX}	PERT/PPST	Disabled
26	PT6	IOC6	—	—	—	V_{DDX}	PERT/PPST	Disabled
27	PT5	IOC5	—	—	—	V_{DDX}	PERT/PPST	Disabled

Table 1-24. 64-Pin LQFP Pinout for S12GA96 and S12GA128

	Function <----lowest-----PRIORITY-----highest---->					Power Supply	Internal Pull Resistor	
Package Pin	Pin	2nd Func.	3rd Func.	4th Func	5th Func		CTRL	Reset State
28	PT4	IOC4	—	—	—	V_{DDX}	PERT/PPST	Disabled
29	PT3	IOC3	—	—	—	V_{DDX}	PERT/PPST	Disabled
30	PT2	IOC2	—	—	—	V_{DDX}	PERT/PPST	Disabled
31	PT1	IOC1	$\overline{IRQ}$	—	—	V_{DDX}	PERT/PPST	Disabled
32	PT0	IOC0	$\overline{XIRQ}$	—	—	V_{DDX}	PERT/PPST	Disabled
33	PAD0	KWAD0	AN0	—	—	V_{DDA}	PER1AD/PPS1AD	Disabled
34	PAD8	KWAD8	AN8	—	—	V_{DDA}	PER0AD/PPS0AD	Disabled
35	PAD1	KWAD1	AN1	—	—	V_{DDA}	PER1AD/PPS1AD	Disabled
36	PAD9	KWAD9	AN9	—	—	V_{DDA}	PER0ADPPS0AD	Disabled
37	PAD2	KWAD2	AN2	—	—	V_{DDA}	PER1AD/PPS1AD	Disabled
38	PAD10	KWAD10	AN10	—	—	V_{DDA}	PER0AD/PPS0AD	Disabled
39	PAD3	KWAD3	AN3	—	—	V_{DDA}	PER1AD/PPS1AD	Disabled
40	PAD11	KWAD11	AN11	—	—	V_{DDA}	PER0AD/PPS0AD	Disabled
41	PAD4	KWAD4	AN4	—	—	V_{DDA}	PER1AD/PPS1AD	Disabled
42	PAD12	KWAD12		—	—	V_{DDA}	PER0AD/PPS0AD	Disabled
43	PAD5	KWAD5	AN5	—	—	V_{DDA}	PER1AD/PPS1AD	Disabled
44	PAD13	KWAD13		—	—	V_{DDA}	PER0AD/PPS0AD	Disabled
45	PAD6	KWAD6	AN6	—	—	V_{DDA}	PER1AD/PPS1AD	Disabled
46	PAD14	KWAD14		—	—	V_{DDA}	PER0AD/PPS0AD	Disabled
47	PAD7	KWAD7	AN7	—	—	V_{DDA}	PER1AD/PPS1AD	Disabled
48	PAD15	KWAD15		—	—	V_{DDA}	PER0AD/PPS0AD	Disabled
49	VRH	—	—	—	—	—	—	—
50	VDDA	—	—	—	—	—	—	—
51	VSSA	—	—	—	—	—	—	—
52	PS0	RXD0	—	—	—	V_{DDX}	PERS/PPSS	Up
53	PS1	TXD0	—	—	—	V_{DDX}	PERS/PPSS	Up
54	PS2	RXD1	—	—	—	V_{DDX}	PERS/PPSS	Up
55	PS3	TXD1	—	—	—	V_{DDX}	PERS/PPSS	Up
56	PS4	MISO0	—	—	—	V_{DDX}	PERS/PPSS	Up

Table 1-24. 64-Pin LQFP Pinout for S12GA96 and S12GA128

	Function <----lowest-----PRIORITY-----highest---->					Power Supply	Internal Pull Resistor	
Package Pin	**Pin**	**2nd Func.**	**3rd Func.**	**4th Func**	**5th Func**		**CTRL**	**Reset State**
57	PS5	MOSI0	—	—	—	V_{DDX}	PERS/PPSS	Up
58	PS6	SCK0	—	—	—	V_{DDX}	PERS/PPSS	Up
59	PS7	API_EXTCLK	ECLK	$\overline{SS0}$	—	V_{DDX}	PERS/PPSS	Up
60	PM0	RXCAN	—	—	—	V_{DDX}	PERM/PPSM	Disabled
61	PM1	TXCAN	—	—	—	V_{DDX}	PERM/PPSM	Disabled
62	PM2	RXD2	—	—	—	V_{DDX}	PERM/PPSM	Disabled
63	PM3	TXD2	—	—	—	V_{DDX}	PERM/PPSM	Disabled
64	PJ7	KWJ7	$\overline{SS2}$	—	—	V_{DDX}	PERJ/PPSJ	Up

[1] The regular I/O characteristics (see Section A.2, “I/O Characteristics”) apply if the EXTAL/XTAL function is disabled

1.8.7.3 Pinout 100-Pin LQFP

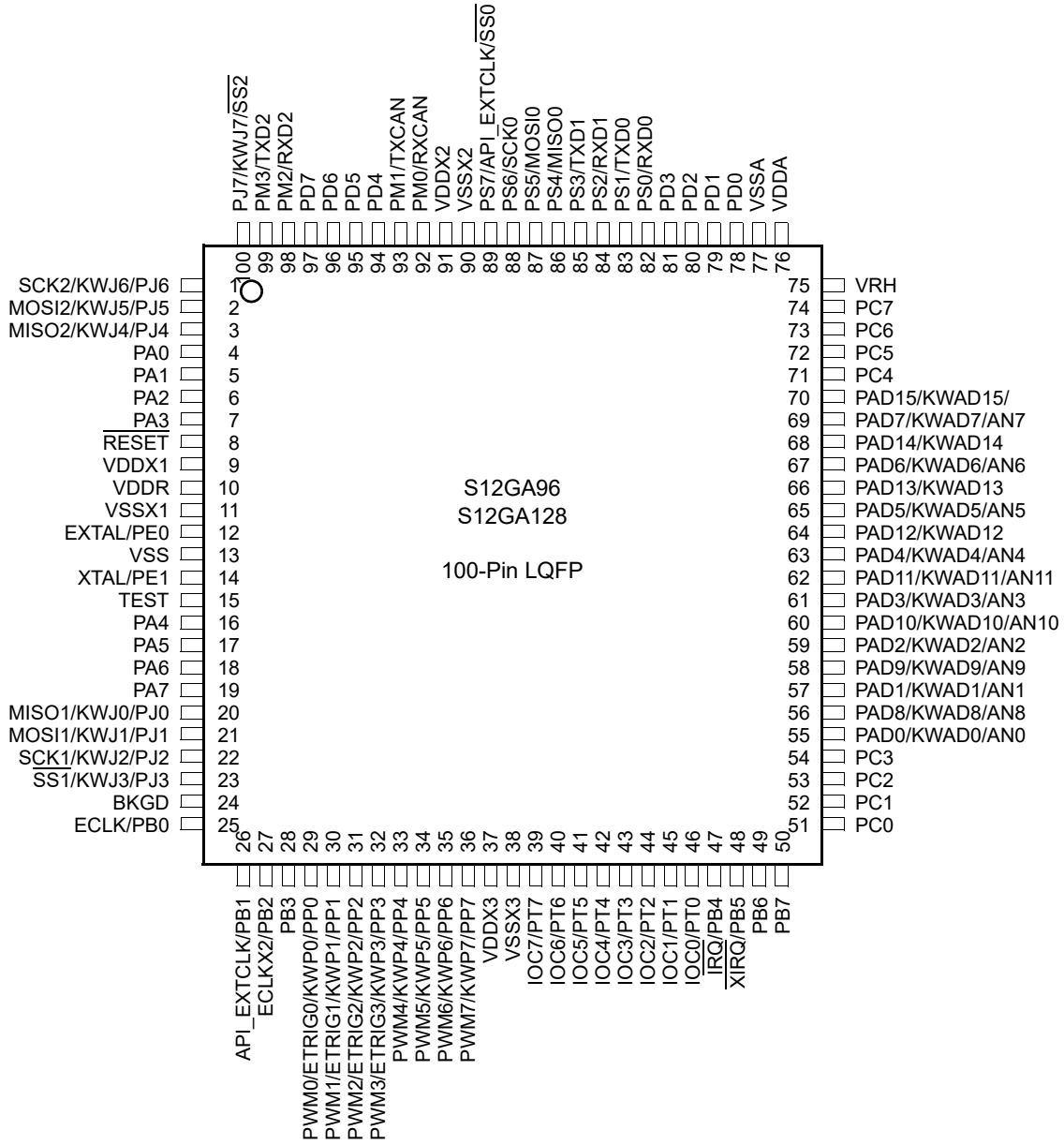

Figure 1-20. 100-Pin LQFP Pinout for S12GA96 and S12GA128

Table 1-25. 100-Pin LQFP Pinout for S12GA96 and S12GA128

	Function <----lowest-----PRIORITY-----highest---->				Power Supply	Internal Pull Resistor	
Package Pin	Pin	2nd Func.	3rd Func.	4th Func.		CTRL	Reset State
1	PJ6	KWJ6	SCK2	—	V_{DDX}	PERJ/PPSJ	Up
2	PJ5	KWJ5	MOSI2	—	V_{DDX}	PERJ/PPSJ	Up
3	PJ4	KWJ4	MISO2	—	V_{DDX}	PERJ/PPSJ	Up
4	PA0	—	—	—	V_{DDX}	PUCR/PUPAE	Disabled
5	PA1	—	—	—	V_{DDX}	PUCR/PUPAE	Disabled
6	PA2	—	—	—	V_{DDX}	PUCR/PUPAE	Disabled
7	PA3	—	—	—	V_{DDX}	PUCR/PUPAE	Disabled
8	RESET	—	—	—	V_{DDX}	PULLUP	
9	VDDX1	—	—	—	—	—	—
10	VDDR	—	—	—	—	—	—
11	VSSX1	—	—	—	—	—	—
12	PE0[1]	EXTAL	—	—	V_{DDX}	PUCR/PDPEE	Down
13	VSS	—	—	—	—	—	—
14	PE1[1]	XTAL	—	—	V_{DDX}	PUCR/PDPEE	Down
15	TEST	—	—	—	N.A.	$\overline{\text{RESET}}$ pin	Down
16	PA4	—	—	—	V_{DDX}	PUCR/PUPAE	Disabled
17	PA5	—	—	—	V_{DDX}	PUCR/PUPAE	Disabled
18	PA6	—	—	—	V_{DDX}	PUCR/PUPAE	Disabled
19	PA7	—	—	—	V_{DDX}	PUCR/PUPAE	Disabled
20	PJ0	KWJ0	MISO1	—	V_{DDX}	PERJ/PPSJ	Up
21	PJ1	KWJ1	MOSI1	—	V_{DDX}	PERJ/PPSJ	Up
22	PJ2	KWJ2	SCK1	—	V_{DDX}	PERJ/PPSJ	Up
23	PJ3	KWJ3	$\overline{\text{SS1}}$	—	V_{DDX}	PERJ/PPSJ	Up
24	BKGD	MODC	—	—	V_{DDX}	PUCR/BKPUE	Up
25	PB0	ECLK	—	—	V_{DDX}	PUCR/PUPBE	Disabled
26	PB1	API_EXTCLK	—	—	V_{DDX}	PUCR/PUPBE	Disabled
27	PB2	ECLKX2	—	—	V_{DDX}	PUCR/PUPBE	Disabled

Table 1-25. 100-Pin LQFP Pinout for S12GA96 and S12GA128

	Function <----lowest-----PRIORITY-----highest---->				Power Supply	Internal Pull Resistor	
Package Pin	Pin	2nd Func.	3rd Func.	4th Func.		CTRL	Reset State
28	PB3	—	—	—	V_{DDX}	PUCR/PUPBE	Disabled
29	PP0	KWP0	ETRIG0	PWM0	V_{DDX}	PERP/PPSP	Disabled
30	PP1	KWP1	ETRIG1	PWM1	V_{DDX}	PERP/PPSP	Disabled
31	PP2	KWP2	ETRIG2	PWM2	V_{DDX}	PERP/PPSP	Disabled
32	PP3	KWP3	ETRIG3	PWM3	V_{DDX}	PERP/PPSP	Disabled
33	PP4	KWP4	PWM4	—	V_{DDX}	PERP/PPSP	Disabled
34	PP5	KWP5	PWM5	—	V_{DDX}	PERP/PPSP	Disabled
35	PP6	KWP6	PWM6	—	V_{DDX}	PERP/PPSP	Disabled
36	PP7	KWP7	PWM7	—	V_{DDX}	PERP/PPSP	Disabled
37	VDDX3	—	—	—	—	—	—
38	VSSX3	—	—	—	—	—	—
39	PT7	IOC7	—	—	V_{DDX}	PERT/PPST	Disabled
40	PT6	IOC6	—	—	V_{DDX}	PERT/PPST	Disabled
41	PT5	IOC5	—	—	V_{DDX}	PERT/PPST	Disabled
42	PT4	IOC4	—	—	V_{DDX}	PERT/PPST	Disabled
43	PT3	IOC3	—	—	V_{DDX}	PERT/PPST	Disabled
44	PT2	IOC2	—	—	V_{DDX}	PERT/PPST	Disabled
45	PT1	IOC1	—	—	V_{DDX}	PERT/PPST	Disabled
46	PT0	IOC0	—	—	V_{DDX}	PERT/PPST	Disabled
47	PB4	$\overline{\text{IRQ}}$	—	—	V_{DDX}	PUCR/PUPBE	Disabled
48	PB5	$\overline{\text{XIRQ}}$	—	—	V_{DDX}	PUCR/PUPBE	Disabled
49	PB6	—	—	—	V_{DDX}	PUCR/PUPBE	Disabled
50	PB7	—	—	—	V_{DDX}	PUCR/PUPBE	Disabled
51	PC0	—	—	—	V_{DDA}	PUCR/PUPCE	Disabled
52	PC1	—	—	—	V_{DDA}	PUCR/PUPCE	Disabled
53	PC2	—	—	—	V_{DDA}	PUCR/PUPCE	Disabled
54	PC3	—	—	—	V_{DDA}	PUCR/PUPCE	Disabled
55	PAD0	KWAD0	AN0	—	V_{DDA}	PER1AD/PPS1AD	Disabled
56	PAD8	KWAD8	AN8	—	V_{DDA}	PER0AD/PPS0AD	Disabled

Table 1-25. 100-Pin LQFP Pinout for S12GA96 and S12GA128

	Function <----lowest-----PRIORITY-----highest---->				Power Supply	Internal Pull Resistor	
Package Pin	Pin	2nd Func.	3rd Func.	4th Func.		CTRL	Reset State
57	PAD1	KWAD1	AN1	—	V_{DDA}	PER1AD/PPS1AD	Disabled
58	PAD9	KWAD9	AN9	—	V_{DDA}	PER0AD/PPS0AD	Disabled
59	PAD2	KWAD2	AN2	—	V_{DDA}	PER1AD/PPS1AD	Disabled
60	PAD10	KWAD10	AN10	—	V_{DDA}	PER0AD/PPS0AD	Disabled
61	PAD3	KWAD3	AN3	—	V_{DDA}	PER1AD/PPS1AD	Disabled
62	PAD11	KWAD11	AN11	—	V_{DDA}	PER0AD/PPS0AD	Disabled
63	PAD4	KWAD4	AN4	—	V_{DDA}	PER1AD/PPS1AD	Disabled
64	PAD12	KWAD12	—	—	V_{DDA}	PER0AD/PPS0AD	Disabled
65	PAD5	KWAD5	AN5	—	V_{DDA}	PER1AD/PPS1AD	Disabled
66	PAD13	KWAD13	—	—	V_{DDA}	PER0AD/PPS0AD	Disabled
67	PAD6	KWAD6	AN6	—	V_{DDA}	PER1AD/PPS1AD	Disabled
68	PAD14	KWAD14	—	—	V_{DDA}	PER0AD/PPS0AD	Disabled
69	PAD7	KWAD7	AN7	—	V_{DDA}	PER1AD/PPS1AD	Disabled
70	PAD15	KWAD15	—	—	V_{DDA}	PER0AD/PPS0AD	Disabled
71	PC4	—	—	—	V_{DDA}	PUCR/PUPCE	Disabled
72	PC5		—	—	V_{DDA}	PUCR/PUPCE	Disabled
73	PC6		—	—	V_{DDA}	PUCR/PUPCE	Disabled
74	PC7		—	—	V_{DDA}	PUCR/PUPCE	Disabled
75	VRH	—	—	—	—	—	—
76	VDDA	—	—	—	—	—	—
77	VSSA	—	—	—	—	—	—
78	PD0	—	—	—	V_{DDX}	PUCR/PUPDE	Disabled
79	PD1	—	—	—	V_{DDX}	PUCR/PUPDE	Disabled
80	PD2	—	—	—	V_{DDX}	PUCR/PUPDE	Disabled
81	PD3	—	—	—	V_{DDX}	PUCR/PUPDE	Disabled
82	PS0	RXD0	—	—	V_{DDX}	PERS/PPSS	Up
83	PS1	TXD0	—	—	V_{DDX}	PERS/PPSS	Up
84	PS2	RXD1	—	—	V_{DDX}	PERS/PPSS	Up
85	PS3	TXD1	—	—	V_{DDX}	PERS/PPSS	Up

Table 1-25. 100-Pin LQFP Pinout for S12GA96 and S12GA128

	Function <----lowest-----PRIORITY-----highest---->				Power Supply	Internal Pull Resistor	
Package Pin	Pin	2nd Func.	3rd Func.	4th Func.		CTRL	Reset State
86	PS4	MISO0	—	—	V_{DDX}	PERS/PPSS	Up
87	PS5	MOSI0	—	—	V_{DDX}	PERS/PPSS	Up
88	PS6	SCK0	—	—	V_{DDX}	PERS/PPSS	Up
89	PS7	API_EXTCLK	$\overline{SS0}$	—	V_{DDX}	PERS/PPSS	Up
90	VSSX2	—	—	—	—	—	—
91	VDDX2	—	—	—	—	—	—
92	PM0	RXCAN	—	—	V_{DDX}	PERM/PPSM	Disabled
93	PM1	TXCAN	—	—	V_{DDX}	PERM/PPSM	Disabled
94	PD4	—	—	—	V_{DDX}	PUCR/PUPDE	Disabled
95	PD5	—	—	—	V_{DDX}	PUCR/PUPDE	Disabled
96	PD6	—	—	—	V_{DDX}	PUCR/PUPDE	Disabled
97	PD7	—	—	—	V_{DDX}	PUCR/PUPDE	Disabled
98	PM2	RXD2	—	—	V_{DDX}	PERM/PPSM	Disabled
99	PM3	TXD2	—	—	V_{DDX}	PERM/PPSM	Disabled
100	PJ7	KWJ7	$\overline{SS2}$	—	V_{DDX}	PERJ/PPSJ	Up

[1] The regular I/O characteristics (see Section A.2, “I/O Characteristics”) apply if the EXTAL/XTAL function is disabled

1.8.8 S12G192 and S12G240

1.8.8.1 Pinout 48-Pin LQFP

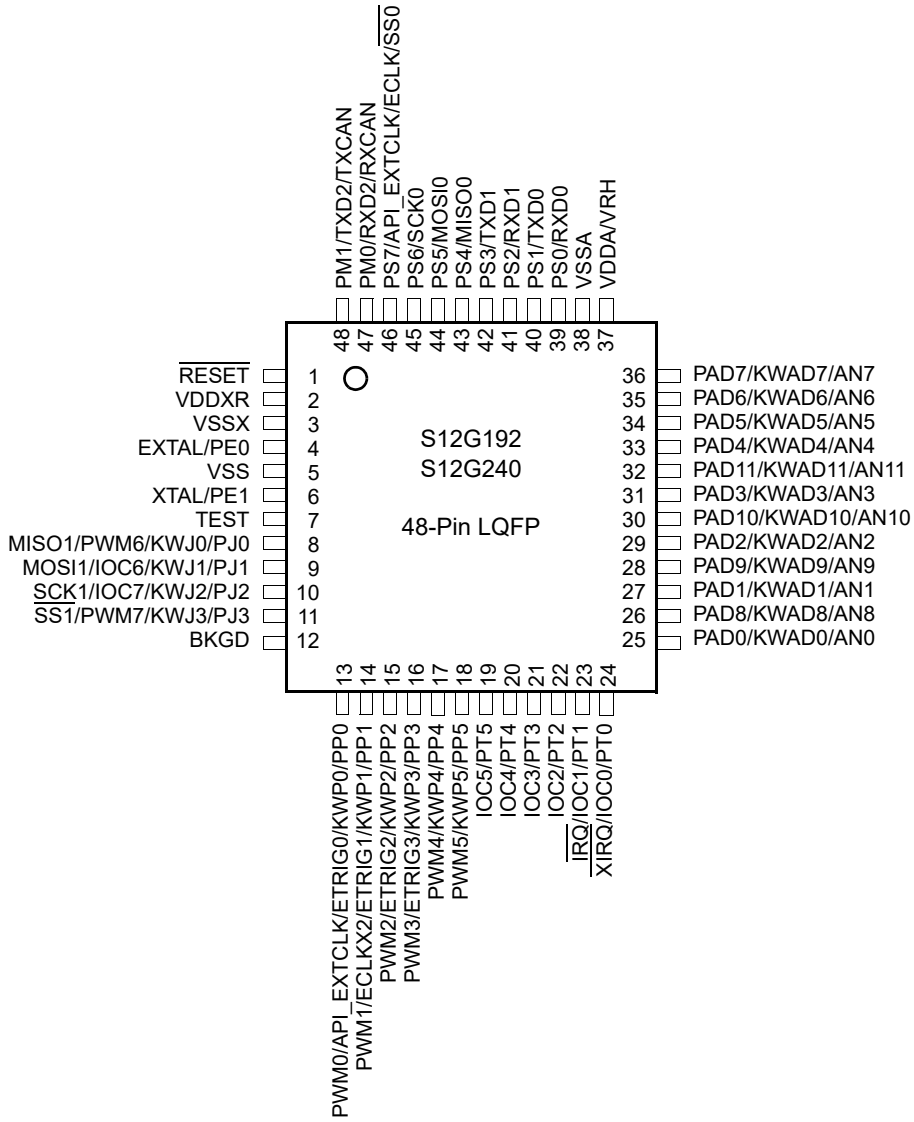

Figure 1-21. 48-Pin LQFP Pinout for S12G192 and S12G240

Table 1-26. 48-Pin LQFP Pinout for S12G192 and S12G240

	Function <----lowest-----PRIORITY-----highest---->					Power Supply	Internal Pull Resistor	
Package Pin	Pin	2nd Func.	3rd Func.	4th Func	5th Func		CTRL	Reset State
1	RESET	—	—	—	—	V_{DDX}	PULLUP	

Table 1-26. 48-Pin LQFP Pinout for S12G192 and S12G240

	Function <----lowest-----PRIORITY-----highest---->					Power Supply	Internal Pull Resistor	
Package Pin	Pin	2nd Func.	3rd Func.	4th Func	5th Func		CTRL	Reset State
2	VDDXR	—	—	—	—	—	—	—
3	VSSX	—	—	—	—	—	—	—
4	PE0[1]	EXTAL	—	—	—	V_{DDX}	PUCR/PDPEE	Down
5	VSS	—	—	—	—	—	—	—
6	PE1[1]	XTAL	—	—	—	V_{DDX}	PUCR/PDPEE	Down
7	TEST	—	—	—	—	N.A.	$\overline{\text{RESET}}$ pin	Down
8	PJ0	KWJ0	PWM6	MISO1	—	V_{DDX}	PERJ/PPSJ	Up
9	PJ1	KWJ1	IOC6	MOSI1	—	V_{DDX}	PERJ/PPSJ	Up
10	PJ2	KWJ2	IOC7	SCK1	—	V_{DDX}	PERJ/PPSJ	Up
11	PJ3	KWJ3	PWM7	$\overline{\text{SS1}}$	—	V_{DDX}	PERJ/PPSJ	Up
12	BKGD	MODC	—	—	—	V_{DDX}	PUCR/BKPUE	Up
13	PP0	KWP0	ETRIG0	API_EXTCLK	PWM0	V_{DDX}	PERP/PPSP	Disabled
14	PP1	KWP1	ETRIG1	ECLKX2	PWM1	V_{DDX}	PERP/PPSP	Disabled
15	PP2	KWP2	ETRIG2	PWM2	—	V_{DDX}	PERP/PPSP	Disabled
16	PP3	KWP3	ETRIG3	PWM3	—	V_{DDX}	PERP/PPSP	Disabled
17	PP4	KWP4	PWM4	—	—	V_{DDX}	PERP/PPSP	Disabled
18	PP5	KWP5	PWM5	—	—	V_{DDX}	PERP/PPSP	Disabled
19	PT5	IOC5	—	—	—	V_{DDX}	PERT/PPST	Disabled
20	PT4	IOC4	—	—	—	V_{DDX}	PERT/PPST	Disabled
21	PT3	IOC3	—	—	—	V_{DDX}	PERT/PPST	Disabled
22	PT2	IOC2	—	—	—	V_{DDX}	PERT/PPST	Disabled
23	PT1	IOC1	$\overline{\text{IRQ}}$	—	—	V_{DDX}	PERT/PPST	Disabled
24	PT0	IOC0	$\overline{\text{XIRQ}}$	—	—	V_{DDX}	PERT/PPST	Disabled
25	PAD0	KWAD0	AN0	—	—	V_{DDA}	PER1AD/PPS1AD	Disabled
26	PAD8	KWAD8	AN8	—	—	V_{DDA}	PER0AD/PPS0AD	Disabled
27	PAD1	KWAD1	AN1	—	—	V_{DDA}	PER1AD/PPS1AD	Disabled
28	PAD9	KWAD9	AN9	—	—	V_{DDA}	PER0AD/PPS0AD	Disabled
29	PAD2	KWAD2	AN2	—	—	V_{DDA}	PER1AD/PPS1AD	Disabled

Table 1-26. 48-Pin LQFP Pinout for S12G192 and S12G240

	Function <----lowest-----PRIORITY-----highest---->					Power Supply	Internal Pull Resistor	
Package Pin	Pin	2nd Func.	3rd Func.	4th Func	5th Func		CTRL	Reset State
30	PAD10	KWAD10	AN10	—	—	V_{DDA}	PER0AD/PPS0AD	Disabled
31	PAD3	KWAD3	AN3	—	—	V_{DDA}	PER1AD/PPS1AD	Disabled
32	PAD11	KWAD11	AN11	—	—	V_{DDA}	PER0AD/PPS0AD	Disabled
33	PAD4	KWAD4	AN4	—	—	V_{DDA}	PER1AD/PPS1AD	Disabled
34	PAD5	KWAD5	AN5	—	—	V_{DDA}	PER1AD/PPS0AD	Disabled
35	PAD6	KWAD6	AN6	—	—	V_{DDA}	PER1AD/PPS1AD	Disabled
36	PAD7	KWAD7	AN7	—	—	V_{DDA}	PER1AD/PPS1AD	Disabled
37	VDDA	VRH	—	—	—	—	—	—
38	VSSA	—	—	—	—	—	—	—
39	PS0	RXD0	—	—	—	V_{DDX}	PERS/PPSS	Up
40	PS1	TXD0	—	—	—	V_{DDX}	PERS/PPSS	Up
41	PS2	RXD1	—	—	—	V_{DDX}	PERS/PPSS	Up
42	PS3	TXD1	—	—	—	V_{DDX}	PERS/PPSS	Up
43	PS4	MISO0	—	—	—	V_{DDX}	PERS/PPSS	Up
44	PS5	MOSI0	—	—	—	V_{DDX}	PERS/PPSS	Up
45	PS6	SCK0	—	—	—	V_{DDX}	PERS/PPSS	Up
46	PS7	API_EXTCLK	ECLK	$\overline{SS0}$	—	V_{DDX}	PERS/PPSS	Up
47	PM0	RXD2	RXCAN	—	—	V_{DDX}	PERM/PPSM	Disabled
48	PM1	TXD2	TXCAN	—	—	V_{DDX}	PERM/PPSM	Disabled

[1] The regular I/O characteristics (see Section A.2, “I/O Characteristics”) apply if the EXTAL/XTAL function is disabled

1.8.8.2 Pinout 64-Pin LQFP

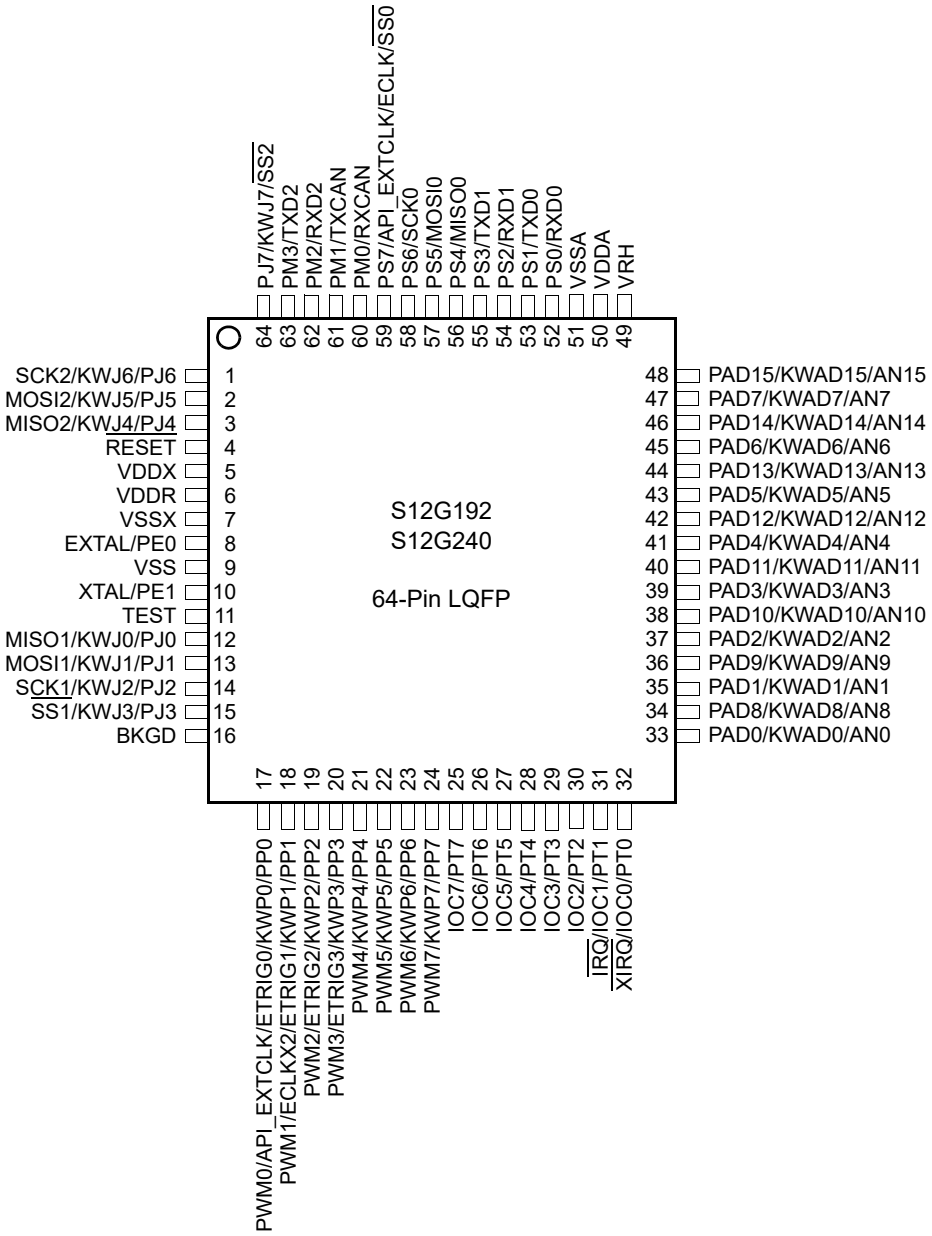

Figure 1-22. 64-Pin LQFP Pinout for S12G192 and S12G240

Table 1-27. 64-Pin LQFP Pinout for S12G192 and S12G240

	Function <----lowest-----PRIORITY-----highest---->					Power Supply	Internal Pull Resistor	
Package Pin	Pin	2nd Func.	3rd Func.	4th Func	5th Func		CTRL	Reset State
1	PJ6	KWJ6	SCK2	—	—	V_{DDX}	PERJ/PPSJ	Up
2	PJ5	KWJ5	MOSI2	—	—	V_{DDX}	PERJ/PPSJ	Up
3	PJ4	KWJ4	MISO2	—	—	V_{DDX}	PERJ/PPSJ	Up
4	RESET	—	—	—	—	V_{DDX}	PULLUP	
5	VDDX	—	—	—	—	—	—	—
6	VDDR	—	—	—	—	—	—	—
7	VSSX	—	—	—	—	—	—	—
8	PE0[1]	EXTAL	—	—	—	V_{DDX}	PUCR/PDPEE	Down
9	VSS	—	—	—	—	—	—	—
10	PE1[1]	XTAL	—	—	—	V_{DDX}	PUCR/PDPEE	Down
11	TEST	—	—	—	—	N.A.	$\overline{\text{RESET}}$ pin	Down
12	PJ0	KWJ0	MISO1	—	—	V_{DDX}	PERJ/PPSJ	Up
13	PJ1	KWJ1	MOSI1	—	—	V_{DDX}	PERJ/PPSJ	Up
14	PJ2	KWJ2	SCK1	—	—	V_{DDX}	PERJ/PPSJ	Up
15	PJ3	KWJ3	$\overline{\text{SS1}}$	—	—	V_{DDX}	PERJ/PPSJ	Up
16	BKGD	MODC	—	—	—	V_{DDX}	PUCR/BKPUE	Up
17	PP0	KWP0	ETRIG0	API_EXTCLK	PWM0	V_{DDX}	PERP/PPSP	Disabled
18	PP1	KWP1	ETRIG1	ECLKX2	PWM1	V_{DDX}	PERP/PPSP	Disabled
19	PP2	KWP2	ETRIG2	PWM2	—	V_{DDX}	PERP/PPSP	Disabled
20	PP3	KWP3	ETRIG3	PWM3	—	V_{DDX}	PERP/PPSP	Disabled
21	PP4	KWP4	PWM4	—	—	V_{DDX}	PERP/PPSP	Disabled
22	PP5	KWP5	PWM5	—	—	V_{DDX}	PERP/PPSP	Disabled
23	PP6	KWP6	PWM6	—	—	V_{DDX}	PERP/PPSP	Disabled
24	PP7	KWP7	PWM7	—	—	V_{DDX}	PERP/PPSP	Disabled
25	PT7	IOC7	—	—	—	V_{DDX}	PERT/PPST	Disabled
26	PT6	IOC6	—	—	—	V_{DDX}	PERT/PPST	Disabled
27	PT5	IOC5	—	—	—	V_{DDX}	PERT/PPST	Disabled

Table 1-27. 64-Pin LQFP Pinout for S12G192 and S12G240

	Function <----lowest-----PRIORITY-----highest---->					Power Supply	Internal Pull Resistor	
Package Pin	Pin	2nd Func.	3rd Func.	4th Func	5th Func		CTRL	Reset State
28	PT4	IOC4	—	—	—	V_{DDX}	PERT/PPST	Disabled
29	PT3	IOC3	—	—	—	V_{DDX}	PERT/PPST	Disabled
30	PT2	IOC2	—	—	—	V_{DDX}	PERT/PPST	Disabled
31	PT1	IOC1	$\overline{IRQ}$	—	—	V_{DDX}	PERT/PPST	Disabled
32	PT0	IOC0	$\overline{XIRQ}$	—	—	V_{DDX}	PERT/PPST	Disabled
33	PAD0	KWAD0	AN0	—	—	V_{DDA}	PER1AD/PPS1AD	Disabled
34	PAD8	KWAD8	AN8	—	—	V_{DDA}	PER0AD/PPS0AD	Disabled
35	PAD1	KWAD1	AN1	—	—	V_{DDA}	PER1AD/PPS1AD	Disabled
36	PAD9	KWAD9	AN9	—	—	V_{DDA}	PER0ADPPS0AD	Disabled
37	PAD2	KWAD2	AN2	—	—	V_{DDA}	PER1AD/PPS1AD	Disabled
38	PAD10	KWAD10	AN10	—	—	V_{DDA}	PER0AD/PPS0AD	Disabled
39	PAD3	KWAD3	AN3	—	—	V_{DDA}	PER1AD/PPS1AD	Disabled
40	PAD11	KWAD11	AN11	—	—	V_{DDA}	PER0AD/PPS0AD	Disabled
41	PAD4	KWAD4	AN4	—	—	V_{DDA}	PER1AD/PPS1AD	Disabled
42	PAD12	KWAD12	AN12	—	—	V_{DDA}	PER0AD/PPS0AD	Disabled
43	PAD5	KWAD5	AN5	—	—	V_{DDA}	PER1AD/PPS1AD	Disabled
44	PAD13	KWAD13	AN13	—	—	V_{DDA}	PER0AD/PPS0AD	Disabled
45	PAD6	KWAD6	AN6	—	—	V_{DDA}	PER1AD/PPS1AD	Disabled
46	PAD14	KWAD14	AN14	—	—	V_{DDA}	PER0AD/PPS0AD	Disabled
47	PAD7	KWAD7	AN7	—	—	V_{DDA}	PER1AD/PPS1AD	Disabled
48	PAD15	KWAD15	AN15	—	—	V_{DDA}	PER0AD/PPS0AD	Disabled
49	VRH	—	—	—	—	—	—	—
50	VDDA	—	—	—	—	—	—	—
51	VSSA	—	—	—	—	—	—	—
52	PS0	RXD0	—	—	—	V_{DDX}	PERS/PPSS	Up
53	PS1	TXD0	—	—	—	V_{DDX}	PERS/PPSS	Up
54	PS2	RXD1	—	—	—	V_{DDX}	PERS/PPSS	Up
55	PS3	TXD1	—	—	—	V_{DDX}	PERS/PPSS	Up
56	PS4	MISO0	—	—	—	V_{DDX}	PERS/PPSS	Up

Table 1-27. 64-Pin LQFP Pinout for S12G192 and S12G240

	Function <----lowest-----PRIORITY-----highest---->					Power Supply	Internal Pull Resistor	
Package Pin	**Pin**	**2nd Func.**	**3rd Func.**	**4th Func**	**5th Func**		**CTRL**	**Reset State**
57	PS5	MOSI0	—	—	—	V_{DDX}	PERS/PPSS	Up
58	PS6	SCK0	—	—	—	V_{DDX}	PERS/PPSS	Up
59	PS7	API_EXTCLK	ECLK	$\overline{SS0}$	—	V_{DDX}	PERS/PPSS	Up
60	PM0	RXCAN	—	—	—	V_{DDX}	PERM/PPSM	Disabled
61	PM1	TXCAN	—	—	—	V_{DDX}	PERM/PPSM	Disabled
62	PM2	RXD2	—	—	—	V_{DDX}	PERM/PPSM	Disabled
63	PM3	TXD2	—	—	—	V_{DDX}	PERM/PPSM	Disabled
64	PJ7	KWJ7	$\overline{SS2}$	—	—	V_{DDX}	PERJ/PPSJ	Up

[1] The regular I/O characteristics (see Section A.2, “I/O Characteristics”) apply if the EXTAL/XTAL function is disabled

1.8.8.3 Pinout 100-Pin LQFP

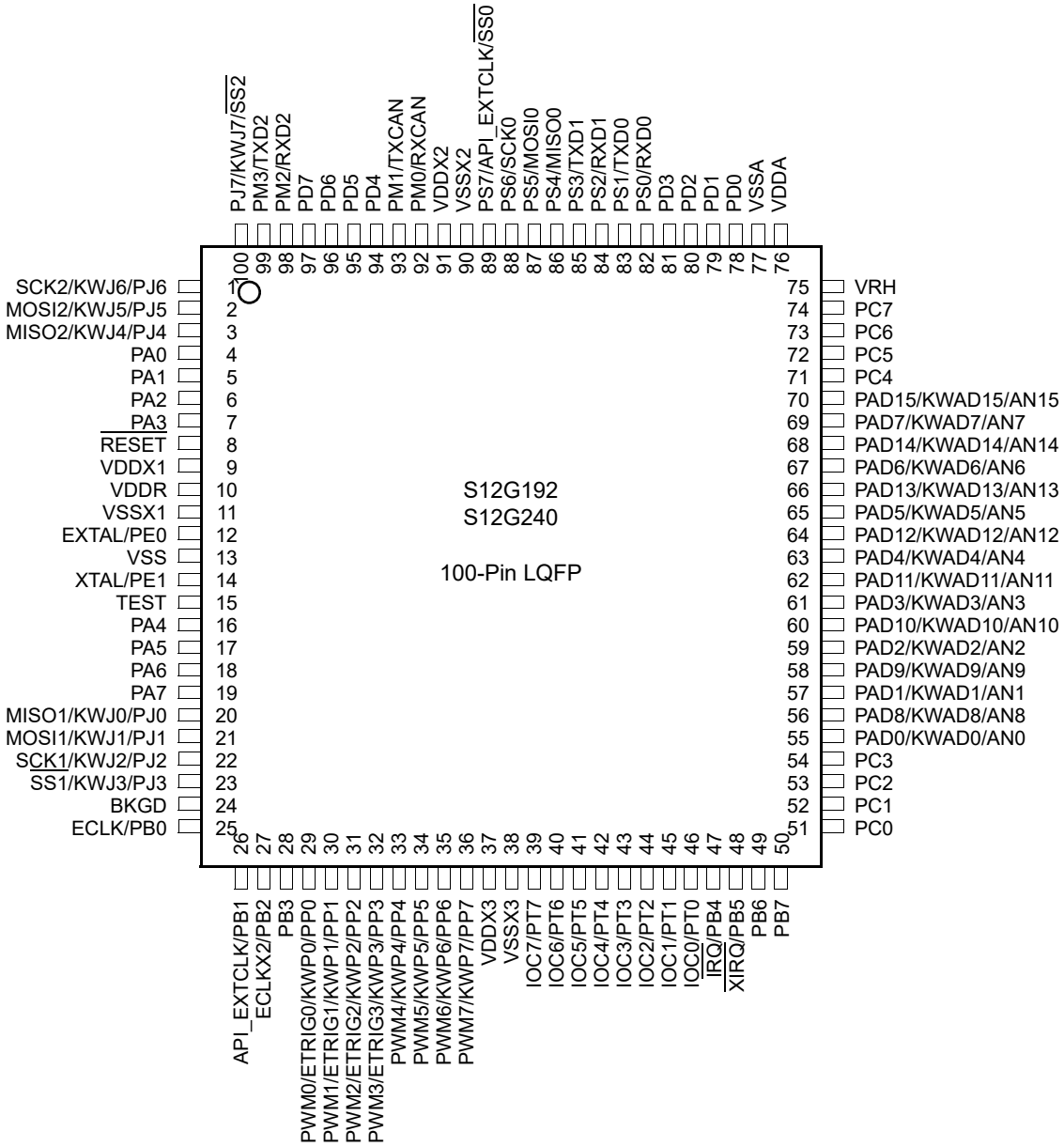

Figure 1-23. 100-Pin LQFP Pinout for S12G192 and S12G240

Table 1-28. 100-Pin LQFP Pinout for S12G192 and S12G240

	Function <----lowest-----PRIORITY-----highest---->				Power Supply	Internal Pull Resistor	
Package Pin	Pin	2nd Func.	3rd Func.	4th Func.		CTRL	Reset State
1	PJ6	KWJ6	SCK2	—	V_{DDX}	PERJ/PPSJ	Up
2	PJ5	KWJ5	MOSI2	—	V_{DDX}	PERJ/PPSJ	Up
3	PJ4	KWJ4	MISO2	—	V_{DDX}	PERJ/PPSJ	Up
4	PA0	—	—	—	V_{DDX}	PUCR/PUPAE	Disabled
5	PA1	—	—	—	V_{DDX}	PUCR/PUPAE	Disabled
6	PA2	—	—	—	V_{DDX}	PUCR/PUPAE	Disabled
7	PA3	—	—	—	V_{DDX}	PUCR/PUPAE	Disabled
8	RESET	—	—	—	V_{DDX}	PULLUP	
9	VDDX1	—	—	—	—	—	—
10	VDDR	—	—	—	—	—	—
11	VSSX1	—	—	—	—	—	—
12	PE0[1]	EXTAL	—	—	V_{DDX}	PUCR/PDPEE	Down
13	VSS	—	—	—	—	—	—
14	PE1[1]	XTAL	—	—	V_{DDX}	PUCR/PDPEE	Down
15	TEST	—	—	—	N.A.	$\overline{\text{RESET}}$ pin	Down
16	PA4	—	—	—	V_{DDX}	PUCR/PUPAE	Disabled
17	PA5	—	—	—	V_{DDX}	PUCR/PUPAE	Disabled
18	PA6	—	—	—	V_{DDX}	PUCR/PUPAE	Disabled
19	PA7	—	—	—	V_{DDX}	PUCR/PUPAE	Disabled
20	PJ0	KWJ0	MISO1	—	V_{DDX}	PERJ/PPSJ	Up
21	PJ1	KWJ1	MOSI1	—	V_{DDX}	PERJ/PPSJ	Up
22	PJ2	KWJ2	SCK1	—	V_{DDX}	PERJ/PPSJ	Up
23	PJ3	KWJ3	$\overline{\text{SS1}}$	—	V_{DDX}	PERJ/PPSJ	Up
24	BKGD	MODC	—	—	V_{DDX}	PUCR/BKPUE	Up
25	PB0	ECLK	—	—	V_{DDX}	PUCR/PUPBE	Disabled
26	PB1	API_EXTCLK	—	—	V_{DDX}	PUCR/PUPBE	Disabled
27	PB2	ECLKX2	—	—	V_{DDX}	PUCR/PUPBE	Disabled

Table 1-28. 100-Pin LQFP Pinout for S12G192 and S12G240

	Function <----lowest-----PRIORITY-----highest---->				Power Supply	Internal Pull Resistor	
Package Pin	Pin	2nd Func.	3rd Func.	4th Func.		CTRL	Reset State
28	PB3	—	—	—	V_{DDX}	PUCR/PUPBE	Disabled
29	PP0	KWP0	ETRIG0	PWM0	V_{DDX}	PERP/PPSP	Disabled
30	PP1	KWP1	ETRIG1	PWM1	V_{DDX}	PERP/PPSP	Disabled
31	PP2	KWP2	ETRIG2	PWM2	V_{DDX}	PERP/PPSP	Disabled
32	PP3	KWP3	ETRIG3	PWM3	V_{DDX}	PERP/PPSP	Disabled
33	PP4	KWP4	PWM4	—	V_{DDX}	PERP/PPSP	Disabled
34	PP5	KWP5	PWM5	—	V_{DDX}	PERP/PPSP	Disabled
35	PP6	KWP6	PWM6	—	V_{DDX}	PERP/PPSP	Disabled
36	PP7	KWP7	PWM7	—	V_{DDX}	PERP/PPSP	Disabled
37	VDDX3	—	—	—	—	—	—
38	VSSX3	—	—	—	—	—	—
39	PT7	IOC7	—	—	V_{DDX}	PERT/PPST	Disabled
40	PT6	IOC6	—	—	V_{DDX}	PERT/PPST	Disabled
41	PT5	IOC5	—	—	V_{DDX}	PERT/PPST	Disabled
42	PT4	IOC4	—	—	V_{DDX}	PERT/PPST	Disabled
43	PT3	IOC3	—	—	V_{DDX}	PERT/PPST	Disabled
44	PT2	IOC2	—	—	V_{DDX}	PERT/PPST	Disabled
45	PT1	IOC1	—	—	V_{DDX}	PERT/PPST	Disabled
46	PT0	IOC0	—	—	V_{DDX}	PERT/PPST	Disabled
47	PB4	$\overline{\text{IRQ}}$	—	—	V_{DDX}	PUCR/PUPBE	Disabled
48	PB5	$\overline{\text{XIRQ}}$	—	—	V_{DDX}	PUCR/PUPBE	Disabled
49	PB6	—	—	—	V_{DDX}	PUCR/PUPBE	Disabled
50	PB7	—	—	—	V_{DDX}	PUCR/PUPBE	Disabled
51	PC0	—	—	—	V_{DDA}	PUCR/PUPCE	Disabled
52	PC1	—	—	—	V_{DDA}	PUCR/PUPCE	Disabled
53	PC2	—	—	—	V_{DDA}	PUCR/PUPCE	Disabled
54	PC3	—	—	—	V_{DDA}	PUCR/PUPCE	Disabled
55	PAD0	KWAD0	AN0	—	V_{DDA}	PER1AD/PPS1AD	Disabled
56	PAD8	KWAD8	AN8	—	V_{DDA}	PER0AD/PPS0AD	Disabled

Table 1-28. 100-Pin LQFP Pinout for S12G192 and S12G240

	Function <----lowest-----PRIORITY-----highest---->				Power Supply	Internal Pull Resistor	
Package Pin	Pin	2nd Func.	3rd Func.	4th Func.		CTRL	Reset State
57	PAD1	KWAD1	AN1	—	V_{DDA}	PER1AD/PPS1AD	Disabled
58	PAD9	KWAD9	AN9	—	V_{DDA}	PER0AD/PPS0AD	Disabled
59	PAD2	KWAD2	AN2	—	V_{DDA}	PER1AD/PPS1AD	Disabled
60	PAD10	KWAD10	AN10	—	V_{DDA}	PER0AD/PPS0AD	Disabled
61	PAD3	KWAD3	AN3	—	V_{DDA}	PER1AD/PPS1AD	Disabled
62	PAD11	KWAD11	AN11	—	V_{DDA}	PER0AD/PPS0AD	Disabled
63	PAD4	KWAD4	AN4	—	V_{DDA}	PER1AD/PPS1AD	Disabled
64	PAD12	KWAD12	AN12	—	V_{DDA}	PER0AD/PPS0AD	Disabled
65	PAD5	KWAD5	AN5	—	V_{DDA}	PER1AD/PPS1AD	Disabled
66	PAD13	KWAD13	AN13	—	V_{DDA}	PER0AD/PPS0AD	Disabled
67	PAD6	KWAD6	AN6	—	V_{DDA}	PER1AD/PPS1AD	Disabled
68	PAD14	KWAD14	AN14	—	V_{DDA}	PER0AD/PPS0AD	Disabled
69	PAD7	KWAD7	AN7	—	V_{DDA}	PER1AD/PPS1AD	Disabled
70	PAD15	KWAD15	AN15	—	V_{DDA}	PER0AD/PPS0AD	Disabled
71	PC4	—	—	—	V_{DDA}	PUCR/PUPCE	Disabled
72	PC5	—	—	—	V_{DDA}	PUCR/PUPCE	Disabled
73	PC6	—	—	—	V_{DDA}	PUCR/PUPCE	Disabled
74	PC7	—	—	—	V_{DDA}	PUCR/PUPCE	Disabled
75	VRH	—	—	—	—	—	—
76	VDDA	—	—	—	—	—	—
77	VSSA	—	—	—	—	—	—
78	PD0	—	—	—	V_{DDX}	PUCR/PUPDE	Disabled
79	PD1	—	—	—	V_{DDX}	PUCR/PUPDE	Disabled
80	PD2	—	—	—	V_{DDX}	PUCR/PUPDE	Disabled
81	PD3	—	—	—	V_{DDX}	PUCR/PUPDE	Disabled
82	PS0	RXD0	—	—	V_{DDX}	PERS/PPSS	Up
83	PS1	TXD0	—	—	V_{DDX}	PERS/PPSS	Up
84	PS2	RXD1	—	—	V_{DDX}	PERS/PPSS	Up
85	PS3	TXD1	—	—	V_{DDX}	PERS/PPSS	Up

Table 1-28. 100-Pin LQFP Pinout for S12G192 and S12G240

	Function <----lowest-----PRIORITY-----highest---->				Power Supply	Internal Pull Resistor	
Package Pin	Pin	2nd Func.	3rd Func.	4th Func.		CTRL	Reset State
86	PS4	MISO0	—	—	V_{DDX}	PERS/PPSS	Up
87	PS5	MOSI0	—	—	V_{DDX}	PERS/PPSS	Up
88	PS6	SCK0	—	—	V_{DDX}	PERS/PPSS	Up
89	PS7	API_EXTCLK	$\overline{SS0}$	—	V_{DDX}	PERS/PPSS	Up
90	VSSX2	—	—	—	—	—	—
91	VDDX2	—	—	—	—	—	—
92	PM0	RXCAN	—	—	V_{DDX}	PERM/PPSM	Disabled
93	PM1	TXCAN	—	—	V_{DDX}	PERM/PPSM	Disabled
94	PD4	—	—	—	V_{DDX}	PUCR/PUPDE	Disabled
95	PD5	—	—	—	V_{DDX}	PUCR/PUPDE	Disabled
96	PD6	—	—	—	V_{DDX}	PUCR/PUPDE	Disabled
97	PD7	—	—	—	V_{DDX}	PUCR/PUPDE	Disabled
98	PM2	RXD2	—	—	V_{DDX}	PERM/PPSM	Disabled
99	PM3	TXD2	—	—	V_{DDX}	PERM/PPSM	Disabled
100	PJ7	KWJ7	$\overline{SS2}$	—	V_{DDX}	PERJ/PPSJ	Up

[1] The regular I/O characteristics (see Section A.2, “I/O Characteristics”) apply if the EXTAL/XTAL function is disabled

1.8.9 S12GA192 and S12GA240

1.8.9.1 Pinout 48-Pin LQFP

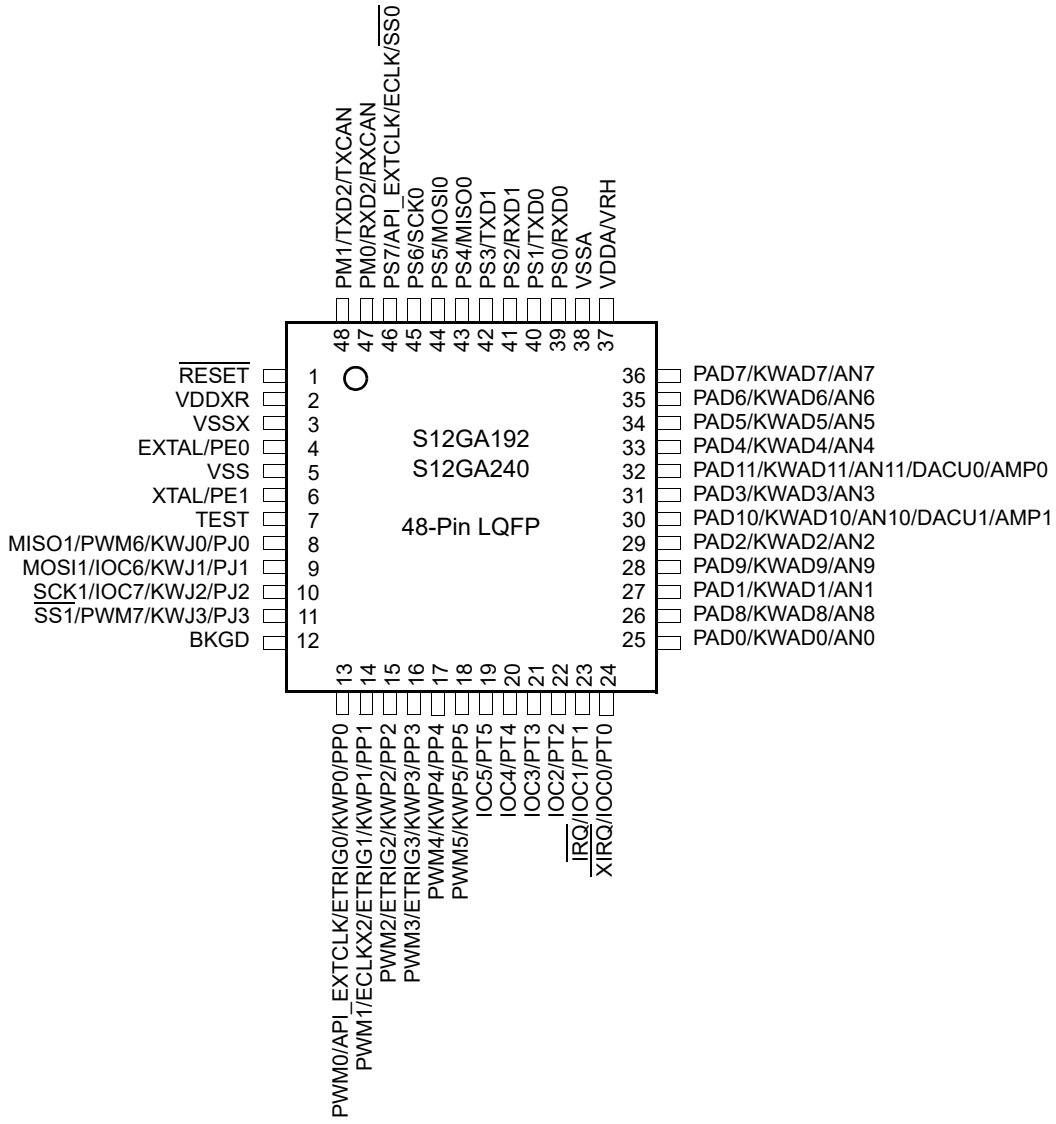

Figure 1-24. 48-Pin LQFP Pinout for S12GA192 and S12GA240

Table 1-29. 48-Pin LQFP Pinout for S12GA192 and S12GA240

	Function <----lowest-----PRIORITY-----highest---->					Power Supply	Internal Pull Resistor	
Package Pin	Pin	2nd Func.	3rd Func.	4th Func	5th Func		CTRL	Reset State
1	RESET	—	—	—	—	V_{DDX}	PULLUP	

Table 1-29. 48-Pin LQFP Pinout for S12GA192 and S12GA240

	Function <----lowest-----PRIORITY-----highest---->					Power Supply	Internal Pull Resistor	
Package Pin	Pin	2nd Func.	3rd Func.	4th Func	5th Func		CTRL	Reset State
2	VDDXR	—	—	—	—	—	—	—
3	VSSX	—	—	—	—	—	—	—
4	PE0[1]	EXTAL	—	—	—	V_{DDX}	PUCR/PDPEE	Down
5	VSS	—	—	—	—	—	—	—
6	PE1[1]	XTAL	—	—	—	V_{DDX}	PUCR/PDPEE	Down
7	TEST	—	—	—	—	N.A.	$\overline{\text{RESET}}$ pin	Down
8	PJ0	KWJ0	PWM6	MISO1	—	V_{DDX}	PERJ/PPSJ	Up
9	PJ1	KWJ1	IOC6	MOSI1	—	V_{DDX}	PERJ/PPSJ	Up
10	PJ2	KWJ2	IOC7	SCK1	—	V_{DDX}	PERJ/PPSJ	Up
11	PJ3	KWJ3	PWM7	$\overline{\text{SS1}}$	—	V_{DDX}	PERJ/PPSJ	Up
12	BKGD	MODC	—	—	—	V_{DDX}	PUCR/BKPUE	Up
13	PP0	KWP0	ETRIG0	API_EXTCLK	PWM0	V_{DDX}	PERP/PPSP	Disabled
14	PP1	KWP1	ETRIG1	ECLKX2	PWM1	V_{DDX}	PERP/PPSP	Disabled
15	PP2	KWP2	ETRIG2	PWM2	—	V_{DDX}	PERP/PPSP	Disabled
16	PP3	KWP3	ETRIG3	PWM3	—	V_{DDX}	PERP/PPSP	Disabled
17	PP4	KWP4	PWM4	—	—	V_{DDX}	PERP/PPSP	Disabled
18	PP5	KWP5	PWM5	—	—	V_{DDX}	PERP/PPSP	Disabled
19	PT5	IOC5	—	—	—	V_{DDX}	PERT/PPST	Disabled
20	PT4	IOC4	—	—	—	V_{DDX}	PERT/PPST	Disabled
21	PT3	IOC3	—	—	—	V_{DDX}	PERT/PPST	Disabled
22	PT2	IOC2	—	—	—	V_{DDX}	PERT/PPST	Disabled
23	PT1	IOC1	$\overline{\text{IRQ}}$	—	—	V_{DDX}	PERT/PPST	Disabled
24	PT0	IOC0	$\overline{\text{XIRQ}}$	—	—	V_{DDX}	PERT/PPST	Disabled
25	PAD0	KWAD0	AN0	—	—	V_{DDA}	PER1AD/PPS1AD	Disabled
26	PAD8	KWAD8	AN8	—	—	V_{DDA}	PER0AD/PPS0AD	Disabled
27	PAD1	KWAD1	AN1	—	—	V_{DDA}	PER1AD/PPS1AD	Disabled
28	PAD9	KWAD9	AN9		—	V_{DDA}	PER0AD/PPS0AD	Disabled
29	PAD2	KWAD2	AN2	—	—	V_{DDA}	PER1AD/PPS1AD	Disabled

Table 1-29. 48-Pin LQFP Pinout for S12GA192 and S12GA240

	Function <----lowest-----PRIORITY-----highest---->					Power Supply	Internal Pull Resistor	
Package Pin	Pin	2nd Func.	3rd Func.	4th Func	5th Func		CTRL	Reset State
30	PAD10	KWAD10	AN10	DACU1	AMP1	V_{DDA}	PER0AD/PPS0AD	Disabled
31	PAD3	KWAD3	AN3	—	—	V_{DDA}	PER1AD/PPS1AD	Disabled
32	PAD11	KWAD11	AN11	DACU0	AMP0	V_{DDA}	PER0AD/PPS0AD	Disabled
33	PAD4	KWAD4	AN4	—	—	V_{DDA}	PER1AD/PPS1AD	Disabled
34	PAD5	KWAD5	AN5	—	—	V_{DDA}	PER1AD/PPS0AD	Disabled
35	PAD6	KWAD6	AN6	—	—	V_{DDA}	PER1AD/PPS1AD	Disabled
36	PAD7	KWAD7	AN7	—	—	V_{DDA}	PER1AD/PPS1AD	Disabled
37	VDDA	VRH	—	—	—	—	—	—
38	VSSA	—	—	—	—	—	—	—
39	PS0	RXD0	—	—	—	V_{DDX}	PERS/PPSS	Up
40	PS1	TXD0	—	—	—	V_{DDX}	PERS/PPSS	Up
41	PS2	RXD1	—	—	—	V_{DDX}	PERS/PPSS	Up
42	PS3	TXD1	—	—	—	V_{DDX}	PERS/PPSS	Up
43	PS4	MISO0	—	—	—	V_{DDX}	PERS/PPSS	Up
44	PS5	MOSI0	—	—	—	V_{DDX}	PERS/PPSS	Up
45	PS6	SCK0	—	—	—	V_{DDX}	PERS/PPSS	Up
46	PS7	API_EXTCLK	ECLK	$\overline{SS0}$	—	V_{DDX}	PERS/PPSS	Up
47	PM0	RXD2	RXCAN	—	—	V_{DDX}	PERM/PPSM	Disabled
48	PM1	TXD2	TXCAN	—	—	V_{DDX}	PERM/PPSM	Disabled

[1] The regular I/O characteristics (see Section A.2, “I/O Characteristics”) apply if the EXTAL/XTAL function is disabled

1.8.9.2 Pinout 64-Pin LQFP

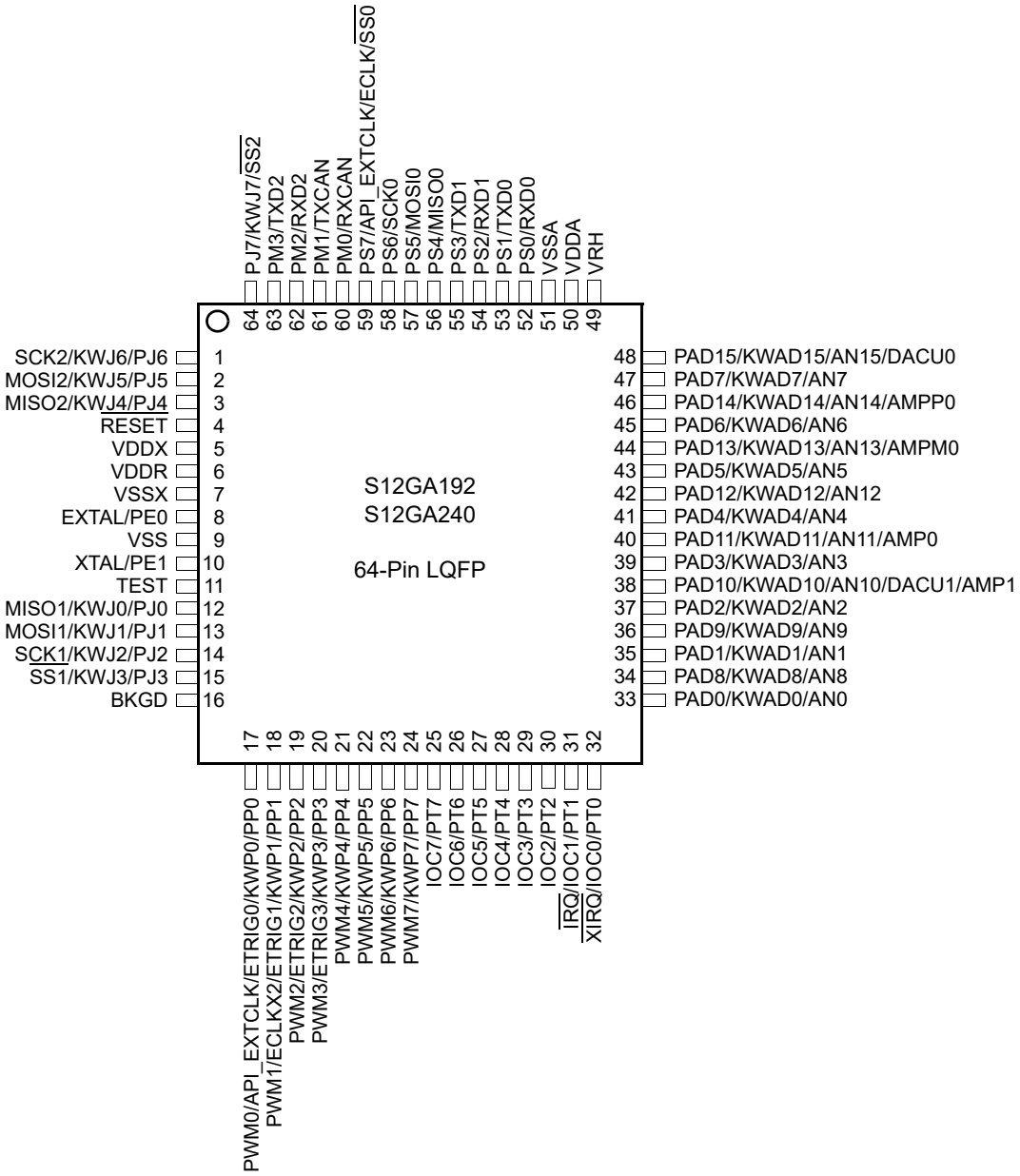

Figure 1-25. 64-Pin LQFP Pinout for S12GA192 and S12GA240

Table 1-30. 64-Pin LQFP Pinout for S12GA192 and S12GA240

	Function <----lowest-----PRIORITY-----highest---->					Power Supply	Internal Pull Resistor	
Package Pin	Pin	2nd Func.	3rd Func.	4th Func	5th Func		CTRL	Reset State
1	PJ6	KWJ6	SCK2	—	—	V_{DDX}	PERJ/PPSJ	Up
2	PJ5	KWJ5	MOSI2	—	—	V_{DDX}	PERJ/PPSJ	Up
3	PJ4	KWJ4	MISO2	—	—	V_{DDX}	PERJ/PPSJ	Up
4	RESET	—	—	—	—	V_{DDX}	PULLUP	
5	VDDX	—	—	—	—	—	—	—
6	VDDR	—	—	—	—	—	—	—
7	VSSX	—	—	—	—	—	—	—
8	PE0[1]	EXTAL	—	—	—	V_{DDX}	PUCR/PDPEE	Down
9	VSS	—	—	—	—	—	—	—
10	PE1[1]	XTAL	—	—	—	V_{DDX}	PUCR/PDPEE	Down
11	TEST	—	—	—	—	N.A.	$\overline{\text{RESET}}$ pin	Down
12	PJ0	KWJ0	MISO1	—	—	V_{DDX}	PERJ/PPSJ	Up
13	PJ1	KWJ1	MOSI1	—	—	V_{DDX}	PERJ/PPSJ	Up
14	PJ2	KWJ2	SCK1	—	—	V_{DDX}	PERJ/PPSJ	Up
15	PJ3	KWJ3	$\overline{\text{SS1}}$	—	—	V_{DDX}	PERJ/PPSJ	Up
16	BKGD	MODC	—	—	—	V_{DDX}	PUCR/BKPUE	Up
17	PP0	KWP0	ETRIG0	API_EXTCLK	PWM0	V_{DDX}	PERP/PPSP	Disabled
18	PP1	KWP1	ETRIG1	ECLKX2	PWM1	V_{DDX}	PERP/PPSP	Disabled
19	PP2	KWP2	ETRIG2	PWM2	—	V_{DDX}	PERP/PPSP	Disabled
20	PP3	KWP3	ETRIG3	PWM3	—	V_{DDX}	PERP/PPSP	Disabled
21	PP4	KWP4	PWM4	—	—	V_{DDX}	PERP/PPSP	Disabled
22	PP5	KWP5	PWM5	—	—	V_{DDX}	PERP/PPSP	Disabled
23	PP6	KWP6	PWM6	—	—	V_{DDX}	PERP/PPSP	Disabled
24	PP7	KWP7	PWM7	—	—	V_{DDX}	PERP/PPSP	Disabled
25	PT7	IOC7	—	—	—	V_{DDX}	PERT/PPST	Disabled
26	PT6	IOC6	—	—	—	V_{DDX}	PERT/PPST	Disabled
27	PT5	IOC5	—	—	—	V_{DDX}	PERT/PPST	Disabled

Table 1-30. 64-Pin LQFP Pinout for S12GA192 and S12GA240

	Function <----lowest-----PRIORITY-----highest---->					Power Supply	Internal Pull Resistor	
Package Pin	Pin	2nd Func.	3rd Func.	4th Func	5th Func		CTRL	Reset State
28	PT4	IOC4	—	—	—	V_{DDX}	PERT/PPST	Disabled
29	PT3	IOC3	—	—	—	V_{DDX}	PERT/PPST	Disabled
30	PT2	IOC2	—	—	—	V_{DDX}	PERT/PPST	Disabled
31	PT1	IOC1	$\overline{IRQ}$	—	—	V_{DDX}	PERT/PPST	Disabled
32	PT0	IOC0	$\overline{XIRQ}$	—	—	V_{DDX}	PERT/PPST	Disabled
33	PAD0	KWAD0	AN0	—	—	V_{DDA}	PER1AD/PPS1AD	Disabled
34	PAD8	KWAD8	AN8	—	—	V_{DDA}	PER0AD/PPS0AD	Disabled
35	PAD1	KWAD1	AN1	—	—	V_{DDA}	PER1AD/PPS1AD	Disabled
36	PAD9	KWAD9	AN9		—	V_{DDA}	PER0ADPPS0AD	Disabled
37	PAD2	KWAD2	AN2	—	—	V_{DDA}	PER1AD/PPS1AD	Disabled
38	PAD10	KWAD10	AN10	DACU1	AMP1	V_{DDA}	PER0AD/PPS0AD	Disabled
39	PAD3	KWAD3	AN3	—	—	V_{DDA}	PER1AD/PPS1AD	Disabled
40	PAD11	KWAD11	AN11	AMP0	—	V_{DDA}	PER0AD/PPS0AD	Disabled
41	PAD4	KWAD4	AN4	—	—	V_{DDA}	PER1AD/PPS1AD	Disabled
42	PAD12	KWAD12	AN12	—	—	V_{DDA}	PER0AD/PPS0AD	Disabled
43	PAD5	KWAD5	AN5	—	—	V_{DDA}	PER1AD/PPS1AD	Disabled
44	PAD13	KWAD13	AN13	AMPM0	—	V_{DDA}	PER0AD/PPS0AD	Disabled
45	PAD6	KWAD6	AN6	—	—	V_{DDA}	PER1AD/PPS1AD	Disabled
46	PAD14	KWAD14	AN14	AMPP0	—	V_{DDA}	PER0AD/PPS0AD	Disabled
47	PAD7	KWAD7	AN7	—	—	V_{DDA}	PER1AD/PPS1AD	Disabled
48	PAD15	KWAD15	AN15	DACU0	—	V_{DDA}	PER0AD/PPS0AD	Disabled
49	VRH	—	—	—	—	—	—	—
50	VDDA	—	—	—	—	—	—	—
51	VSSA	—	—	—	—	—	—	—
52	PS0	RXD0	—	—	—	V_{DDX}	PERS/PPSS	Up
53	PS1	TXD0	—	—	—	V_{DDX}	PERS/PPSS	Up
54	PS2	RXD1	—	—	—	V_{DDX}	PERS/PPSS	Up
55	PS3	TXD1	—	—	—	V_{DDX}	PERS/PPSS	Up
56	PS4	MISO0	—	—	—	V_{DDX}	PERS/PPSS	Up

Table 1-30. 64-Pin LQFP Pinout for S12GA192 and S12GA240

	Function <----lowest-----PRIORITY-----highest---->					Power Supply	Internal Pull Resistor	
Package Pin	**Pin**	**2nd Func.**	**3rd Func.**	**4th Func**	**5th Func**		**CTRL**	**Reset State**
57	PS5	MOSI0	—	—	—	V_{DDX}	PERS/PPSS	Up
58	PS6	SCK0	—	—	—	V_{DDX}	PERS/PPSS	Up
59	PS7	API_EXTCLK	ECLK	$\overline{SS0}$	—	V_{DDX}	PERS/PPSS	Up
60	PM0	RXCAN	—	—	—	V_{DDX}	PERM/PPSM	Disabled
61	PM1	TXCAN	—	—	—	V_{DDX}	PERM/PPSM	Disabled
62	PM2	RXD2	—	—	—	V_{DDX}	PERM/PPSM	Disabled
63	PM3	TXD2	—	—	—	V_{DDX}	PERM/PPSM	Disabled
64	PJ7	KWJ7	$\overline{SS2}$	—	—	V_{DDX}	PERJ/PPSJ	Up

[1] The regular I/O characteristics (see Section A.2, “I/O Characteristics”) apply if the EXTAL/XTAL function is disabled

1.8.9.3 Pinout 100-Pin LQFP

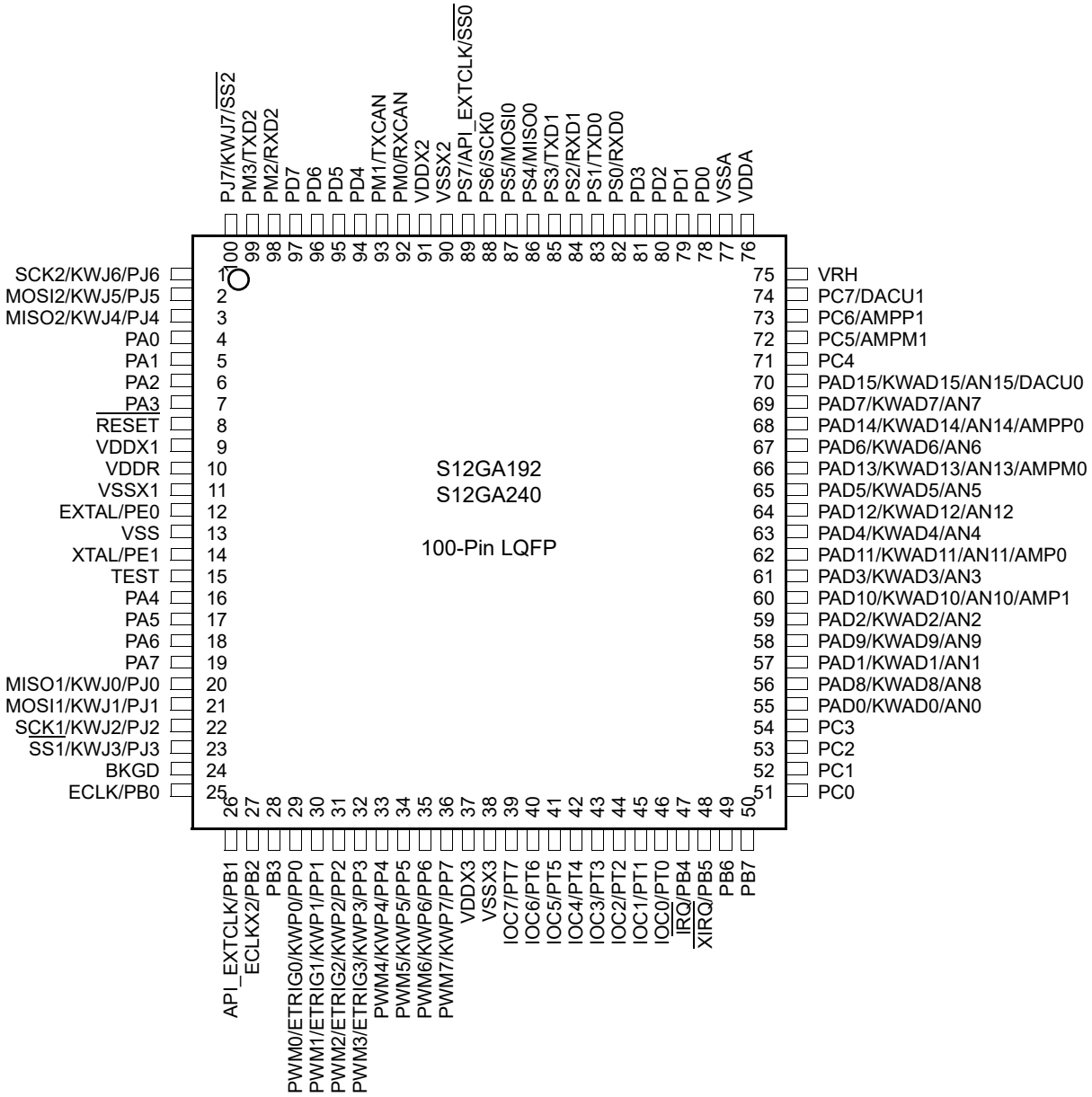

Figure 1-26. 100-Pin LQFP Pinout for S12GA192 and S12GA240

Table 1-31. 100-Pin LQFP Pinout for S12GA192 and S12GA240

	Function <----lowest-----PRIORITY-----highest---->				Power Supply	Internal Pull Resistor	
Package Pin	Pin	2nd Func.	3rd Func.	4th Func.		CTRL	Reset State
1	PJ6	KWJ6	SCK2	—	V_{DDX}	PERJ/PPSJ	Up
2	PJ5	KWJ5	MOSI2	—	V_{DDX}	PERJ/PPSJ	Up
3	PJ4	KWJ4	MISO2	—	V_{DDX}	PERJ/PPSJ	Up
4	PA0	—	—	—	V_{DDX}	PUCR/PUPAE	Disabled
5	PA1	—	—	—	V_{DDX}	PUCR/PUPAE	Disabled
6	PA2	—	—	—	V_{DDX}	PUCR/PUPAE	Disabled
7	PA3	—	—	—	V_{DDX}	PUCR/PUPAE	Disabled
8	RESET	—	—	—	V_{DDX}	PULLUP	
9	VDDX1	—	—	—	—	—	—
10	VDDR	—	—	—	—	—	—
11	VSSX1	—	—	—	—	—	—
12	PE0[1]	EXTAL	—	—	V_{DDX}	PUCR/PDPEE	Down
13	VSS	—	—	—	—	—	—
14	PE1[1]	XTAL	—	—	V_{DDX}	PUCR/PDPEE	Down
15	TEST	—	—	—	N.A.	$\overline{\text{RESET}}$ pin	Down
16	PA4	—	—	—	V_{DDX}	PUCR/PUPAE	Disabled
17	PA5	—	—	—	V_{DDX}	PUCR/PUPAE	Disabled
18	PA6	—	—	—	V_{DDX}	PUCR/PUPAE	Disabled
19	PA7	—	—	—	V_{DDX}	PUCR/PUPAE	Disabled
20	PJ0	KWJ0	MISO1	—	V_{DDX}	PERJ/PPSJ	Up
21	PJ1	KWJ1	MOSI1	—	V_{DDX}	PERJ/PPSJ	Up
22	PJ2	KWJ2	SCK1	—	V_{DDX}	PERJ/PPSJ	Up
23	PJ3	KWJ3	$\overline{\text{SS1}}$	—	V_{DDX}	PERJ/PPSJ	Up
24	BKGD	MODC	—	—	V_{DDX}	PUCR/BKPUE	Up
25	PB0	ECLK	—	—	V_{DDX}	PUCR/PUPBE	Disabled
26	PB1	API_EXTCLK	—	—	V_{DDX}	PUCR/PUPBE	Disabled
27	PB2	ECLKX2	—	—	V_{DDX}	PUCR/PUPBE	Disabled

Table 1-31. 100-Pin LQFP Pinout for S12GA192 and S12GA240

	Function <----lowest-----PRIORITY-----highest---->				Power Supply	Internal Pull Resistor	
Package Pin	Pin	2nd Func.	3rd Func.	4th Func.		CTRL	Reset State
28	PB3	—	—	—	V_{DDX}	PUCR/PUPBE	Disabled
29	PP0	KWP0	ETRIG0	PWM0	V_{DDX}	PERP/PPSP	Disabled
30	PP1	KWP1	ETRIG1	PWM1	V_{DDX}	PERP/PPSP	Disabled
31	PP2	KWP2	ETRIG2	PWM2	V_{DDX}	PERP/PPSP	Disabled
32	PP3	KWP3	ETRIG3	PWM3	V_{DDX}	PERP/PPSP	Disabled
33	PP4	KWP4	PWM4	—	V_{DDX}	PERP/PPSP	Disabled
34	PP5	KWP5	PWM5	—	V_{DDX}	PERP/PPSP	Disabled
35	PP6	KWP6	PWM6	—	V_{DDX}	PERP/PPSP	Disabled
36	PP7	KWP7	PWM7	—	V_{DDX}	PERP/PPSP	Disabled
37	VDDX3	—	—	—	—	—	—
38	VSSX3	—	—	—	—	—	—
39	PT7	IOC7	—	—	V_{DDX}	PERT/PPST	Disabled
40	PT6	IOC6	—	—	V_{DDX}	PERT/PPST	Disabled
41	PT5	IOC5	—	—	V_{DDX}	PERT/PPST	Disabled
42	PT4	IOC4	—	—	V_{DDX}	PERT/PPST	Disabled
43	PT3	IOC3	—	—	V_{DDX}	PERT/PPST	Disabled
44	PT2	IOC2	—	—	V_{DDX}	PERT/PPST	Disabled
45	PT1	IOC1	—	—	V_{DDX}	PERT/PPST	Disabled
46	PT0	IOC0	—	—	V_{DDX}	PERT/PPST	Disabled
47	PB4	$\overline{\text{IRQ}}$	—	—	V_{DDX}	PUCR/PUPBE	Disabled
48	PB5	$\overline{\text{XIRQ}}$	—	—	V_{DDX}	PUCR/PUPBE	Disabled
49	PB6	—	—	—	V_{DDX}	PUCR/PUPBE	Disabled
50	PB7	—	—	—	V_{DDX}	PUCR/PUPBE	Disabled
51	PC0	—	—	—	V_{DDA}	PUCR/PUPCE	Disabled
52	PC1	—	—	—	V_{DDA}	PUCR/PUPCE	Disabled
53	PC2	—	—	—	V_{DDA}	PUCR/PUPCE	Disabled
54	PC3	—	—	—	V_{DDA}	PUCR/PUPCE	Disabled
55	PAD0	KWAD0	AN0	—	V_{DDA}	PER1AD/PPS1AD	Disabled
56	PAD8	KWAD8	AN8	—	V_{DDA}	PER0AD/PPS0AD	Disabled

Table 1-31. 100-Pin LQFP Pinout for S12GA192 and S12GA240

	Function <----lowest-----PRIORITY-----highest---->				Power Supply	Internal Pull Resistor	
Package Pin	Pin	2nd Func.	3rd Func.	4th Func.		CTRL	Reset State
57	PAD1	KWAD1	AN1	—	V_{DDA}	PER1AD/PPS1AD	Disabled
58	PAD9	KWAD9	AN9	—	V_{DDA}	PER0AD/PPS0AD	Disabled
59	PAD2	KWAD2	AN2	—	V_{DDA}	PER1AD/PPS1AD	Disabled
60	PAD10	KWAD10	AN10	AMP1	V_{DDA}	PER0AD/PPS0AD	Disabled
61	PAD3	KWAD3	AN3	—	V_{DDA}	PER1AD/PPS1AD	Disabled
62	PAD11	KWAD11	AN11	AMP0	V_{DDA}	PER0AD/PPS0AD	Disabled
63	PAD4	KWAD4	AN4	—	V_{DDA}	PER1AD/PPS1AD	Disabled
64	PAD12	KWAD12	AN12	—	V_{DDA}	PER0AD/PPS0AD	Disabled
65	PAD5	KWAD5	AN5	—	V_{DDA}	PER1AD/PPS1AD	Disabled
66	PAD13	KWAD13	AN13	AMPM0	V_{DDA}	PER0AD/PPS0AD	Disabled
67	PAD6	KWAD6	AN6	—	V_{DDA}	PER1AD/PPS1AD	Disabled
68	PAD14	KWAD14	AN14	AMPP0	V_{DDA}	PER0AD/PPS0AD	Disabled
69	PAD7	KWAD7	AN7	—	V_{DDA}	PER1AD/PPS1AD	Disabled
70	PAD15	KWAD15	AN15	DACU0	V_{DDA}	PER0AD/PPS0AD	Disabled
71	PC4	—	—	—	V_{DDA}	PUCR/PUPCE	Disabled
72	PC5	AMPM1	—	—	V_{DDA}	PUCR/PUPCE	Disabled
73	PC6	AMPP1	—	—	V_{DDA}	PUCR/PUPCE	Disabled
74	PC7	DACU1	—	—	V_{DDA}	PUCR/PUPCE	Disabled
75	VRH	—	—	—	—	—	—
76	VDDA	—	—	—	—	—	—
77	VSSA	—	—	—	—	—	—
78	PD0	—	—	—	V_{DDX}	PUCR/PUPDE	Disabled
79	PD1	—	—	—	V_{DDX}	PUCR/PUPDE	Disabled
80	PD2	—	—	—	V_{DDX}	PUCR/PUPDE	Disabled
81	PD3	—	—	—	V_{DDX}	PUCR/PUPDE	Disabled
82	PS0	RXD0	—	—	V_{DDX}	PERS/PPSS	Up
83	PS1	TXD0	—	—	V_{DDX}	PERS/PPSS	Up
84	PS2	RXD1	—	—	V_{DDX}	PERS/PPSS	Up
85	PS3	TXD1	—	—	V_{DDX}	PERS/PPSS	Up

Table 1-31. 100-Pin LQFP Pinout for S12GA192 and S12GA240

	Function <----lowest-----PRIORITY-----highest---->				Power Supply	Internal Pull Resistor	
Package Pin	Pin	2nd Func.	3rd Func.	4th Func.		CTRL	Reset State
86	PS4	MISO0	—	—	V_{DDX}	PERS/PPSS	Up
87	PS5	MOSI0	—	—	V_{DDX}	PERS/PPSS	Up
88	PS6	SCK0	—	—	V_{DDX}	PERS/PPSS	Up
89	PS7	API_EXTCLK	$\overline{SS0}$	—	V_{DDX}	PERS/PPSS	Up
90	VSSX2	—	—	—	—	—	—
91	VDDX2	—	—	—	—	—	—
92	PM0	RXCAN	—	—	V_{DDX}	PERM/PPSM	Disabled
93	PM1	TXCAN	—	—	V_{DDX}	PERM/PPSM	Disabled
94	PD4	—	—	—	V_{DDX}	PUCR/PUPDE	Disabled
95	PD5	—	—	—	V_{DDX}	PUCR/PUPDE	Disabled
96	PD6	—	—	—	V_{DDX}	PUCR/PUPDE	Disabled
97	PD7	—	—	—	V_{DDX}	PUCR/PUPDE	Disabled
98	PM2	RXD2	—	—	V_{DDX}	PERM/PPSM	Disabled
99	PM3	TXD2	—	—	V_{DDX}	PERM/PPSM	Disabled
100	PJ7	KWJ7	$\overline{SS2}$	—	V_{DDX}	PERJ/PPSJ	Up

[1] The regular I/O characteristics (see Section A.2, “I/O Characteristics”) apply if the EXTAL/XTAL function is disabled

1.8.9.4 Known Good Die Option (KGD)

Table 1-32. KGD Option for S12GA192 and S12GA240

	Function <----lowest-----PRIORITY-----highest---->				Power Supply	Internal Pull Resistor	
Wire Bond Die Pad	Pin	2nd Func.	3rd Func.	4th Func.		CTRL	Reset State
1	PJ6	KWJ6	SCK2	—	V_{DDX}	PERJ/PPSJ	Up
2	PJ5	KWJ5	MOSI2	—	V_{DDX}	PERJ/PPSJ	Up
3	PJ4	KWJ4	MISO2	—	V_{DDX}	PERJ/PPSJ	Up
4	PA0	—	—	—	V_{DDX}	PUCR/PUPAE	Disabled
5	PA1	—	—	—	V_{DDX}	PUCR/PUPAE	Disabled
6	PA2	—	—	—	V_{DDX}	PUCR/PUPAE	Disabled
7	PA3	—	—	—	V_{DDX}	PUCR/PUPAE	Disabled
8	RESET	—	—	—	V_{DDX}	PULLUP	
9	VDDX1	—	—	—	—	—	—
10	VDDR	—	—	—	—	—	—
11	VSSX1	—	—	—	—	—	—
12	PE0[1]	EXTAL	—	—	V_{DDX}	PUCR/PDPEE	Down
13	VSS	—	—	—	—	—	—
14	PE1[1]	XTAL	—	—	V_{DDX}	PUCR/PDPEE	Down
15	TEST	—	—	—	N.A.	$\overline{\text{RESET}}$ pin	Down
16	PA4	—	—	—	V_{DDX}	PUCR/PUPAE	Disabled
17	PA5	—	—	—	V_{DDX}	PUCR/PUPAE	Disabled
18	PA6	—	—	—	V_{DDX}	PUCR/PUPAE	Disabled
19	PA7	—	—	—	V_{DDX}	PUCR/PUPAE	Disabled
20	PJ0	KWJ0	MISO1	—	V_{DDX}	PERJ/PPSJ	Up
21	PJ1	KWJ1	MOSI1	—	V_{DDX}	PERJ/PPSJ	Up
22	PJ2	KWJ2	SCK1	—	V_{DDX}	PERJ/PPSJ	Up
23	PJ3	KWJ3	$\overline{\text{SS1}}$	—	V_{DDX}	PERJ/PPSJ	Up
24	BKGD	MODC	—	—	V_{DDX}	PUCR/BKPUE	Up
25	PB0	ECLK	—	—	V_{DDX}	PUCR/PUPBE	Disabled
26	PB1	API_EXTCLK	—	—	V_{DDX}	PUCR/PUPBE	Disabled

Table 1-32. KGD Option for S12GA192 and S12GA240

	Function <----lowest-----PRIORITY-----highest---->				Power Supply	Internal Pull Resistor	
Wire Bond Die Pad	Pin	2nd Func.	3rd Func.	4th Func.		CTRL	Reset State
27	PB2	ECLKX2	—	—	V_{DDX}	PUCR/PUPBE	Disabled
28	PB3	—	—	—	V_{DDX}	PUCR/PUPBE	Disabled
29	PP0	KWP0	ETRIG0	PWM0	V_{DDX}	PERP/PPSP	Disabled
30	PP1	KWP1	ETRIG1	PWM1	V_{DDX}	PERP/PPSP	Disabled
31	PP2	KWP2	ETRIG2	PWM2	V_{DDX}	PERP/PPSP	Disabled
32	PP3	KWP3	ETRIG3	PWM3	V_{DDX}	PERP/PPSP	Disabled
33	PP4	KWP4	PWM4	—	V_{DDX}	PERP/PPSP	Disabled
34	PP5	KWP5	PWM5	—	V_{DDX}	PERP/PPSP	Disabled
35	PP6	KWP6	PWM6	—	V_{DDX}	PERP/PPSP	Disabled
36	PP7	KWP7	PWM7	—	V_{DDX}	PERP/PPSP	Disabled
37	VDDX3	—	—	—	—	—	—
38	VSSX3	—	—	—	—	—	—
39	PT7	IOC7	—	—	V_{DDX}	PERT/PPST	Disabled
40	PT6	IOC6	—	—	V_{DDX}	PERT/PPST	Disabled
41	PT5	IOC5	—	—	V_{DDX}	PERT/PPST	Disabled
42	PT4	IOC4	—	—	V_{DDX}	PERT/PPST	Disabled
43	PT3	IOC3	—	—	V_{DDX}	PERT/PPST	Disabled
44	PT2	IOC2	—	—	V_{DDX}	PERT/PPST	Disabled
45	PT1	IOC1	—	—	V_{DDX}	PERT/PPST	Disabled
46	PT0	IOC0	—	—	V_{DDX}	PERT/PPST	Disabled
47	PB4	$\overline{\text{IRQ}}$	—	—	V_{DDX}	PUCR/PUPBE	Disabled
48	PB5	$\overline{\text{XIRQ}}$	—	—	V_{DDX}	PUCR/PUPBE	Disabled
49	PB6	—	—	—	V_{DDX}	PUCR/PUPBE	Disabled
50	PB7	—	—	—	V_{DDX}	PUCR/PUPBE	Disabled
51	PC0	—	—	—	V_{DDA}	PUCR/PUPCE	Disabled
52	PC1	—	—	—	V_{DDA}	PUCR/PUPCE	Disabled
53	PC2	—	—	—	V_{DDA}	PUCR/PUPCE	Disabled
54	PC3	—	—	—	V_{DDA}	PUCR/PUPCE	Disabled
55	PAD0	KWAD0	AN0	—	V_{DDA}	PER1AD/PPS1AD	Disabled

Table 1-32. KGD Option for S12GA192 and S12GA240

	Function <----lowest-----PRIORITY-----highest---->				Power Supply	Internal Pull Resistor	
Wire Bond Die Pad	Pin	2nd Func.	3rd Func.	4th Func.		CTRL	Reset State
56	PAD8	KWAD8	AN8	—	V_{DDA}	PER0AD/PPS0AD	Disabled
57	PAD1	KWAD1	AN1	—	V_{DDA}	PER1AD/PPS1AD	Disabled
58	PAD9	KWAD9	AN9	—	V_{DDA}	PER0AD/PPS0AD	Disabled
59	PAD2	KWAD2	AN2	—	V_{DDA}	PER1AD/PPS1AD	Disabled
60	PAD10	KWAD10	AN10	AMP1	V_{DDA}	PER0AD/PPS0AD	Disabled
61	PAD3	KWAD3	AN3	—	V_{DDA}	PER1AD/PPS1AD	Disabled
62	PAD11	KWAD11	AN11	AMP0	V_{DDA}	PER0AD/PPS0AD	Disabled
63	PAD4	KWAD4	AN4	—	V_{DDA}	PER1AD/PPS1AD	Disabled
64	PAD12	KWAD12	AN12	—	V_{DDA}	PER0AD/PPS0AD	Disabled
65	PAD5	KWAD5	AN5	—	V_{DDA}	PER1AD/PPS1AD	Disabled
66	PAD13	KWAD13	AN13	AMPM0	V_{DDA}	PER0AD/PPS0AD	Disabled
67	PAD6	KWAD6	AN6	—	V_{DDA}	PER1AD/PPS1AD	Disabled
68	PAD14	KWAD14	AN14	AMPP0	V_{DDA}	PER0AD/PPS0AD	Disabled
69	PAD7	KWAD7	AN7	—	V_{DDA}	PER1AD/PPS1AD	Disabled
70	PAD15	KWAD15	AN15	DACU0	V_{DDA}	PER0AD/PPS0AD	Disabled
71	PC4	—	—	—	V_{DDA}	PUCR/PUPCE	Disabled
72	PC5	AMPM1	—	—	V_{DDA}	PUCR/PUPCE	Disabled
73	PC6	AMPP1	—	—	V_{DDA}	PUCR/PUPCE	Disabled
74	PC7	DACU1	—	—	V_{DDA}	PUCR/PUPCE	Disabled
75	VRH	—	—	—	—	—	—
76	VDDA	—	—	—	—	—	—
77	VSSA	—	—	—	—	—	—
78	PD0	—	—	—	V_{DDX}	PUCR/PUPDE	Disabled
79	PD1	—	—	—	V_{DDX}	PUCR/PUPDE	Disabled
80	PD2	—	—	—	V_{DDX}	PUCR/PUPDE	Disabled
81	PD3	—	—	—	V_{DDX}	PUCR/PUPDE	Disabled
82	PS0	RXD0	—	—	V_{DDX}	PERS/PPSS	Up
83	PS1	TXD0	—	—	V_{DDX}	PERS/PPSS	Up
84	PS2	RXD1	—	—	V_{DDX}	PERS/PPSS	Up

Table 1-32. KGD Option for S12GA192 and S12GA240

	Function <----lowest-----PRIORITY-----highest---->				Power Supply	Internal Pull Resistor	
Wire Bond Die Pad	Pin	2nd Func.	3rd Func.	4th Func.		CTRL	Reset State
85	PS3	TXD1	—	—	V_{DDX}	PERS/PPSS	Up
86	PS4	MISO0	—	—	V_{DDX}	PERS/PPSS	Up
87	PS5	MOSI0	—	—	V_{DDX}	PERS/PPSS	Up
88	PS6	SCK0	—	—	V_{DDX}	PERS/PPSS	Up
89	PS7	API_EXTCLK	$\overline{SS0}$	—	V_{DDX}	PERS/PPSS	Up
90	VSSX2	—	—	—	—	—	—
91	VDDX2	—	—	—	—	—	—
92	PM0	RXCAN	—	—	V_{DDX}	PERM/PPSM	Disabled
93	PM1	TXCAN	—	—	V_{DDX}	PERM/PPSM	Disabled
94	PD4	—	—	—	V_{DDX}	PUCR/PUPDE	Disabled
95	PD5	—	—	—	V_{DDX}	PUCR/PUPDE	Disabled
96	PD6	—	—	—	V_{DDX}	PUCR/PUPDE	Disabled
97	PD7	—	—	—	V_{DDX}	PUCR/PUPDE	Disabled
98	PM2	RXD2	—	—	V_{DDX}	PERM/PPSM	Disabled
99	PM3	TXD2	—	—	V_{DDX}	PERM/PPSM	Disabled
100	PJ7	KWJ7	$\overline{SS2}$	—	V_{DDX}	PERJ/PPSJ	Up

[1] The regular I/O characteristics (see Section A.2, “I/O Characteristics”) apply if the EXTAL/XTAL function is disabled

1.9 System Clock Description

For the system clock description please refer to chapter Chapter 1, “Device Overview MC9S12G-Family”.

1.10 Modes of Operation

The MCU can operate in different modes. These are described in 1.10.1 Chip Configuration Summary.

The MCU can operate in different power modes to facilitate power saving when full system performance is not required. These are described in 1.10.2 Low Power Operation.

Some modules feature a software programmable option to freeze the module status whilst the background debug module is active to facilitate debugging.

1.10.1 Chip Configuration Summary

The different modes and the security state of the MCU affect the debug features (enabled or disabled).

The operating mode out of reset is determined by the state of the MODC signal during reset (see Table 1-33). The MODC bit in the MODE register shows the current operating mode and provides limited mode switching during operation. The state of the MODC signal is latched into this bit on the rising edge of $\overline{\text{RESET}}$.

Table 1-33. Chip Modes

Chip Modes	MODC
Normal single chip	1
Special single chip	0

1.10.1.1 Normal Single-Chip Mode

This mode is intended for normal device operation. The opcode from the on-chip memory is being executed after reset (requires the reset vector to be programmed correctly). The processor program is executed from internal memory.

1.10.1.2 Special Single-Chip Mode

This mode is used for debugging single-chip operation, boot-strapping, or security related operations. The background debug module BDM is active in this mode. The CPU executes a monitor program located in an on-chip ROM. BDM firmware waits for additional serial commands through the BKGD pin.

1.10.2 Low Power Operation

The MC9S12G has two static low-power modes Pseudo Stop and Stop Mode. For a detailed description refer to S12CPMU section.

1.11 Security

The MCU security mechanism prevents unauthorized access to the Flash memory. Refer to Chapter 9, “Security (S12XS9SECV2)”, Section 7.4.1, “Security”, and Section 29.5, “Security”.

1.12 Resets and Interrupts

Consult the S12 CPU manual and the S12SINT section for information on exception processing.

1.12.1 Resets

Table 1-34. lists all Reset sources and the vector locations. Resets are explained in detail in the Chapter 10, “S12 Clock, Reset and Power Management Unit (S12CPMU)”.

Table 1-34. Reset Sources and Vector Locations

Vector Address	Reset Source	CCR Mask	Local Enable
$FFFE	Power-On Reset (POR)	None	None
$FFFE	Low Voltage Reset (LVR)	None	None
$FFFE	External pin $\overline{\text{RESET}}$	None	None
$FFFE	Illegal Address Reset	None	None
$FFFC	Clock monitor reset	None	OSCE Bit in CPMUOSC register
$FFFA	COP watchdog reset	None	CR[2:0] in CPMUCOP register

1.12.2 Interrupt Vectors

Table 1-35 lists all interrupt sources and vectors in the default order of priority. The interrupt module (see Chapter 6, "Interrupt Module (S12SINTV1)") provides an interrupt vector base register (IVBR) to relocate the vectors.

Table 1-35. Interrupt Vector Locations (Sheet 1 of 2)

Vector Address[1]	Interrupt Source	CCR Mask	Local Enable	Wake up from STOP	Wakeup from WAIT
Vector base + $F8	Unimplemented instruction trap	None	None	-	-
Vector base+ $F6	SWI	None	None	-	-
Vector base+ $F4	$\overline{\text{XIRQ}}$	X Bit	None	Yes	Yes
Vector base+ $F2	$\overline{\text{IRQ}}$	I bit	IRQCR (IRQEN)	Yes	Yes
Vector base+ $F0	RTI time-out interrupt	I bit	CPMUINT (RTIE)	10.6 Interrupts	
Vector base+ $EE	TIM timer channel 0	I bit	TIE (C0I)	No	Yes
Vector base + $EC	TIM timer channel 1	I bit	TIE (C1I)	No	Yes
Vector base+ $EA	TIM timer channel 2	I bit	TIE (C2I)	No	Yes
Vector base+ $E8	TIM timer channel 3	I bit	TIE (C3I)	No	Yes
Vector base+ $E6	TIM timer channel 4	I bit	TIE (C4I)	No	Yes
Vector base+ $E4	TIM timer channel 5	I bit	TIE (C5I)	No	Yes
Vector base + $E2	TIM timer channel 6	I bit	TIE (C6I)	No	Yes
Vector base+ $E0	TIM timer channel 7	I bit	TIE (C7I)	No	Yes
Vector base+ $DE	TIM timer overflow	I bit	TSCR2 (TOI)	No	Yes
Vector base+ $DC	TIM Pulse accumulator A overflow[2]	I bit	PACTL (PAOVI)	No	Yes
Vector base + $DA	TIM Pulse accumulator input edge[3]	I bit	PACTL (PAI)	No	Yes
Vector base + $D8	SPI0	I bit	SPI0CR1 (SPIE, SPTIE)	No	Yes
Vector base+ $D6	SCI0	I bit	SCI0CR2 (TIE, TCIE, RIE, ILIE)	Yes	Yes
Vector base + $D4	SCI1	I bit	SCI1CR2 (TIE, TCIE, RIE, ILIE)	Yes	Yes

Table 1-35. Interrupt Vector Locations (Sheet 2 of 2)

Vector Address[1]	Interrupt Source	CCR Mask	Local Enable	Wake up from STOP	Wakeup from WAIT
Vector base + $D2	ADC	I bit	ATDCTL2 (ASCIE)	No	Yes
Vector base + $D0	Reserved				
Vector base + $CE	Port J	I bit	PIEJ (PIEJ7-PIEJ0)	Yes	Yes
Vector base + $CC	ACMP	I bit	ACMPC (ACIE)	No	Yes
Vector base + $CA	Reserved				
Vector base + $C8	Oscillator status interrupt	I bit	CPMUINT (OSCIE)	No	Yes
Vector base + $C6	PLL lock interrupt	I bit	CPMUINT (LOCKIE)	No	Yes
Vector base + $C4	Reserved				
Vector base + $C2	SCI2	I bit	SCI2CR2 (TIE, TCIE, RIE, ILIE)	Yes	Yes
Vector base + $C0	Reserved				
Vector base + $BE	SPI1	I bit	SPI1CR1 (SPIE, SPTIE)	No	Yes
Vector base + $BC	SPI2	I bit	SPI2CR1 (SPIE, SPTIE)	No	Yes
Vector base + $BA	FLASH error	I bit	FERCNFG (SFDIE, DFDIE)	No	No
Vector base + $B8	FLASH command	I bit	FCNFG (CCIE)	No	Yes
Vector base + $B6	CAN wake-up	I bit	CANRIER (WUPIE)	Yes	Yes
Vector base + $B4	CAN errors	I bit	CANRIER (CSCIE, OVRIE)	No	Yes
Vector base + $B2	CAN receive	I bit	CANRIER (RXFIE)	No	Yes
Vector base + $B0	CAN transmit	I bit	CANTIER (TXEIE[2:0])	No	Yes
Vector base + $AE to Vector base + $90	Reserved				
Vector base + $8E	Port P interrupt	I bit	PIEP (PIEP7-PIEP0)	Yes	Yes
Vector base+ $8C	Reserved				
Vector base + $8A	Low-voltage interrupt (LVI)	I bit	CPMUCTRL (LVIE)	No	Yes
Vector base + $88	Autonomous periodical interrupt (API)	I bit	CPMUAPICTRL (APIE)	Yes	Yes
Vector base + $86	Reserved				
Vector base + $84	ADC compare interrupt	I bit	ATDCTL2 (ACMPIE)	No	Yes
Vector base + $82	Port AD interrupt	I bit	PIE1AD(PIE1AD7-PIE1AD0) PIE0AD(PIE0AD7-PIE0AD0)	Yes	Yes
Vector base + $80	Spurious interrupt	—	None	-	-

[1]16 bits vector address based
[2]Only available if the 8 channel timer module is instantiated on the device
[3]Only available if the 8 channel timer module is instantiated on the device

1.12.3 Effects of Reset

When a reset occurs, MCU registers and control bits are initialized. Refer to the respective block sections for register reset states.

On each reset, the Flash module executes a reset sequence to load Flash configuration registers.

1.12.3.1 Flash Configuration Reset Sequence Phase

On each reset, the Flash module holds CPU activity while loading Flash module registers from the Flash memory. If double faults are detected in the reset phase, Flash module protection and security may be active on leaving reset. This is explained in more detail in the Flash module Section 29.1, “Introduction”.

1.12.3.2 Reset While Flash Command Active

If a reset occurs while any Flash command is in progress, that command will be immediately aborted. The state of the word being programmed or the sector/block being erased is not guaranteed.

1.12.3.3 I/O Pins

Refer to the PIM section for reset configurations of all peripheral module ports.

1.12.3.4 RAM

The RAM arrays are not initialized out of reset.

1.13 COP Configuration

The COP time-out rate bits CR[2:0] and the WCOP bit in the CPMUCOP register at address 0x003C are loaded from the Flash register FOPT. See Table 1-36 and Table 1-37 for coding. The FOPT register is loaded from the Flash configuration field byte at global address 0x3_FF0E during the reset sequence.

Table 1-36. Initial COP Rate Configuration

NV[2:0] in FOPT Register	CR[2:0] in CPMUCOP Register
000	111
001	110
010	101
011	100
100	011
101	010
110	001
111	000

Table 1-37. Initial WCOP Configuration

NV[3] in FOPT Register	WCOP in CPMUCOP Register
1	0
0	1

1.14 Autonomous Clock (ACLK) Configuration

The autonomous clock[1] (ACLK) is not factory trimmed. The reset value of the autonomous clock trimming register[2] (CPMUACLKTR) is 0xFC.

1.15 ADC External Trigger Input Connection

The ADC module includes external trigger inputs ETRIG0, ETRIG1, ETRIG2, and ETRIG3. The external trigger allows the user to synchronize ADC conversion to external trigger events. Chapter 2, “Port Integration Module (S12GPIMV1)” describes the connection of the external trigger inputs. Consult the ADC section for information about the analog-to-digital converter module. References to freeze mode are equivalent to active BDM mode.

1.16 ADC Special Conversion Channels

Whenever the ADC’s Special Channel Conversion Bit (SC) is set, it is capable of running conversion on a number of internal channels (see Table 13-15). Table 1-38 lists the internal reference voltages which are connected to these special conversion channels.

Table 1-38. Usage of ADC Special Conversion Channels

ADC Channel	Usage
Internal_0	V_{DDF}[1]
Internal_1	unused
Internal_2	unused
Internal_3	unused
Internal_4	unused
Internal_5	unused
Internal_6	unused
	Temperature sense of ADC hardmacro[2]
Internal_7	unused

1 See Section 1.17, “ADC Result Reference”.

2 The ADC temperature sensor is only available on S12GA192 and S12GA240 devices.

1. See Chapter 10, “S12 Clock, Reset and Power Management Unit (S12CPMU)”
2. See Section 10.3.2.15, “Autonomous Clock Trimming Register (CPMUACLKTR)”

1.17 ADC Result Reference

MCUs of the S12G-Family are able to measure the internal reference voltage V_{DDF} (see Table 1-38). V_{DDF} is a constant voltage with a narrow distribution over temperature and external voltage supply (see Table A-48).
A 12-bit left justified[1] ADC conversion result of V_{DDF} is provided at address 0x0_4022/0x0_4023 in the NVM's IFR for reference.The measurement conditions of the reference conversion are listed in Section A.16, "ADC Conversion Result Reference". By measuring the voltage V_{DDF} (see Table 1-38) and comparing the result to the reference value in the IFR, it is possible to determine the ADC's reference voltage V_{RH} in the application environment:

$$V_{RH} = \frac{\text{StoredReference}}{\text{ConvertedReference}} \bullet 5V$$

The exact absolute value of an analog conversion can be determined as follows:

$$\text{Result} = \text{ConvertedADInput} \bullet \frac{\text{StoredReference} \bullet 5V}{\text{ConvertedReference} \bullet 2^n}$$

With:

ConvertedADInput:	Result of the analog to digital conversion of the desired pin
ConvertedReference:	Result of channel "Internal_0" conversion
StoredReference:	Value in IFR locatio 0x0_4022/0x0_4023
n:	ADC resolution (10 bit)

CAUTION

To assure high accuracy of the V_{DDF} reference conversion, the NVMs must not be programmed, erased, or read while the conversion takes place. This implies that code must be executed from RAM. The "ConvertedReference" value must be the average of eight consecutive conversions.

CAUTION

The ADC's reference voltage V_{RH} must remain at a constant level throughout the conversion process.

1.18 ADC VRH/VRL Signal Connection

On all S12G devices except for the S12GA192 and the S12GA240 the external VRH signal is directly connected to the ADC's VRH signal input. The ADC's VRL input is connected to VSSA. (see Figure 1-27).

1. The format of the stored V_{DDF} reference value is still subject to change.

The S12GA192 and the S12GA240 contain a Reference Voltage Attenuator (RVA) module. The connection of the ADC's VRH/VRL inputs on these devices is shown in Figure 1-27.

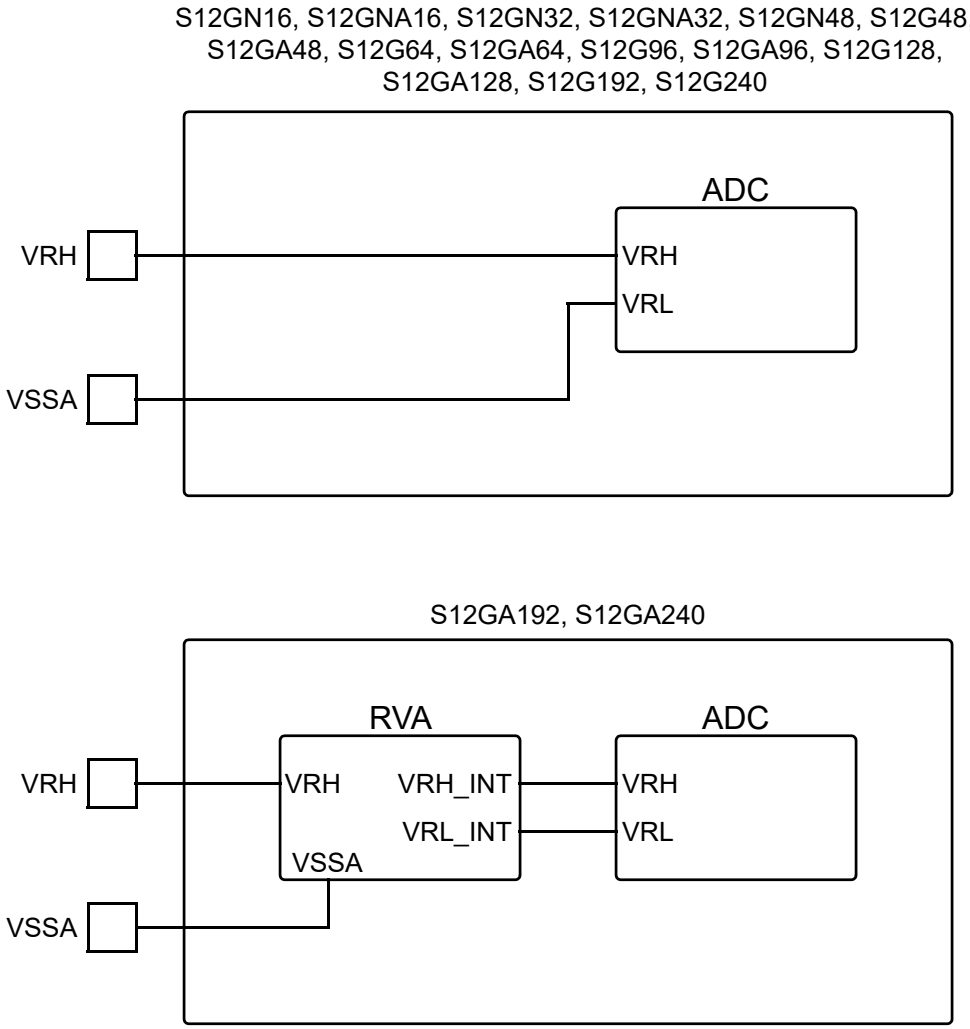

Figure 1-27. ADC VRH/VRL Signal Connection

1.19 BDM Clock Source Connectivity

The BDM clock is mapped to the VCO clock divided by 8.

Chapter 2
Port Integration Module (S12GPIMV1)

Revision History

Rev. No. (Item No.)	Date (Submitted By)	Sections Affected	Substantial Change(s)
V01.01	01 Dec 2010	Table 2-4 Table 2-5 Table 2-8 Table 2-16 Table 2-17	• Removed TXD2 and RXD2 from PM1 and PM0 for G64 • Simplified input buffer control description on port C and AD • Corrected DAC signal priorities on pins PAD10 and PAD11 with shared AMP and DACU output functions
V01.02	30 Aug 2011	2.4.3.40/2-224 2.4.3.48/2-230 2.4.3.63/2-239 2.4.3.64/2-240	• Corrected PIFx descriptions
V01.03	15 Mar 2012	Table 2-2./2-150 Table 2-4./2-154	• Added GA and GNA derivatives

2.1 Introduction

This section describes the S12G-family port integration module (PIM) in its configurations depending on the family devices in their available package options.

It is split up into two parts, firstly determining the routing of the various signals to the available package pins (“PIM Routing”) and secondly describing the general-purpose port related logic (“PIM Ports”).

2.1.1 Glossary

Table 2-1. Glossary Of Terms

Term	Definition
Pin	Package terminal with a unique number defined in the device pinout section
Signal	Input or output line of a peripheral module or general-purpose I/O function arbitrating for a dedicated pin
Port	Group of general-purpose I/O pins sharing peripheral signals

2.1.2 Overview

The PIM establishes the interface between the peripheral modules and the I/O pins. It controls the electrical pin properties as well as the signal prioritization and multiplexing on shared pins.

The family devices share same sets of package options (refer to device overview section) determining the availability of pins and the related PIM memory maps. The corresponding devices are referenced throughout this section by their group name as shown in Table 2-2.

Table 2-2. Device Groups

Group	Devices with same set of package options
G1 (100/64/48)	S12G240, S12GA240 S12G192, S12GA192 S12G128, S12GA128 S12G96, S12GA96
G2 (64/48/32)	S12G64, S12GA64[1], S12G48, S12GA48[1],S12GN48
G3 (48/32/20)	S12GN32, S12GNA32[1,2] S12GN16, S12GNA16[1,2]

[1] No 32 pin

[2] No 20 pin

2.1.3 Features

The PIM includes these distinctive registers:

- Data registers and data direction registers for ports A, B, C, D, E, T, S, M, P, J and AD when used as general-purpose I/O
- Control registers to enable/disable pull devices and select pullups/pulldowns on ports T, S, M, P, J and AD on per-pin basis
- Single control register to enable/disable pull devices on ports A, B, C, D and E, on per-port basis and on BKGD pin
- Control registers to enable/disable open-drain (wired-or) mode on ports S and M
- Interrupt flag register for pin interrupts on ports P, J and AD
- Control register to configure $\overline{\text{IRQ}}$ pin operation
- Routing register to support programmable signal redirection in 20 TSSOP only
- Routing register to support programmable signal redirection in 100 LQFP package only
- Package code register preset by factory related to package in use, writable once after reset. Also includes bit to reprogram routing of API_EXTCLK in all packages.
- Control register for free-running clock outputs

A standard port pin has the following minimum features:

- Input/output selection

- 3.15 V - 5 V digital and analog input
- Input with selectable pullup or pulldown device

Optional features supported on dedicated pins:

- Open drain for wired-or connections
- Key-wakeup feature: External pin interrupt with glitch filtering, which can also be used for wakeup from stop mode.

2.1.4 Block Diagram

Figure 2-1. Block Diagram

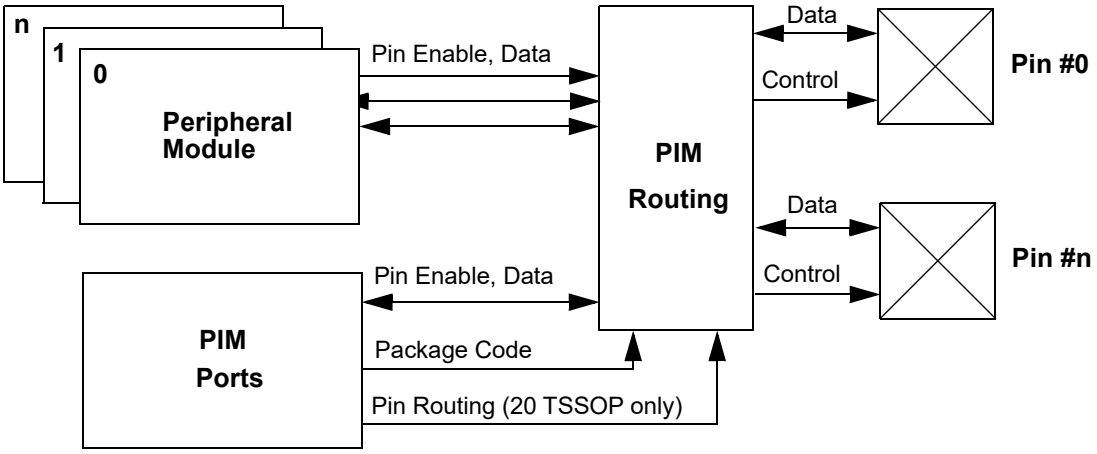

2.2 PIM Routing - External Signal Description

This section lists and describes the signals that do connect off-chip.

Table 2-3 shows the availability of I/O port pins for each group in the largest offered package option.

Table 2-3. Port Pin Availability (in largest package) per Device

Port	Device Group		
	G1 (100 pin)	G2 (64 pin)	G3 (48 pin)
A	7-0	-	-
B	7-0	-	-
C	7-0	-	-
D	7-0	-	-
E	1-0	1-0	1-0
T	7-0	7-0	5-0
S	7-0	7-0	7-0

Table 2-3. Port Pin Availability (in largest package) per Device

Port	Device Group		
	G1 (100 pin)	G2 (64 pin)	G3 (48 pin)
M	3-0	3-0	1-0
P	7-0	7-0	5-0
J	7-0	7-0	3-0
AD	15-0	15-0	11-0

2.2.1 Package Code

The availability of pins and the related peripheral signals are determined by a package code (Section 2.4.3.33, “Package Code Register (PKGCR)”). The related value is loaded from a factory programmed non-volatile memory location into the register during the reset sequence.

Based on the package code all non-bonded pins will have the input buffer disabled to avoid shoot-through current resulting in excess current in stop mode.

2.2.2 Prioritization

If more than one output signal is attempted to be enabled on a specific pin, a priority scheme determines the signal taking effect.

General rules:

- The peripheral with the highest amount of pins has priority on the related pins when it is enabled.
- If a peripheral can selectively disable a function, the freed up pin is used with the next enabled peripheral signal.
- The general-purpose output function takes control if no peripheral function is enabled.

Input signals are not prioritized. Therefore the input function remains active (for example timer input capture) even if a pin is used with the output signal of another peripheral or general-purpose output.

2.2.3 Signals and Priorities

Table 2-4 shows all pins with their related signals per device and package that are controlled by the PIM.

A signal name in squared brackets denotes the port register bit related to the digital I/O function of the pin (port register PORT/PT not listed). It is a representative for any other port related register bit with the same index in PTI, DDR, PER, PPS, and where applicable in PIE, PIF or WOM (see Section 2.4, “PIM Ports - Memory Map and Register Definition”). For example pin PAD15: Signal [PT0AD7] is bit 7 of register PT0AD; other related register bits of this pin are PTI0AD7, DDR0AD7, PER0AD7, PPS0AD7, PIE0AD7 and PIF0AD7.

NOTE

If there is more than one signal associated with a pin, the priority is indicated by the position in the table from top (highest priority) to bottom (lowest priority).

2.3 PIM Routing - Functional description

Table 2-4. Signals and Priorities

Port	Pin	Signal	Signals per Device and Package (signal priority on pin from top to bottom)																				I/O	Description
			GA240 / GA192	G240 / G192	G128 / GA128 / G96 / GA96	GA240 / GA192	G240 / G192	G128 / GA128 / G96 / GA96	G64 / GA64 / G48 / GA48	GN48	GA240 / GA192	G240 / G192	G128 / GA128 / G96 / GA96	G64 / GA64 / G48 / GA48	GN48	GN32 / GNA32	GN16 / GNA16	G64 / G48	GN48	GN32	GN16	GN32	GN16		
			100			64					48							32				20			
-	BKGD	MODC	■	■	■	■	■	■	■	■	■	■	■	■	■	■	■	■	■	■	■	■	I	MODC input during RESET
		BKGD	■	■	■	■	■	■	■	■	■	■	■	■	■	■	■	■	■	■	■	■	I/O	BDM communication
A	PA7-PA0	[PA7:PA0]	■	■	■																		I/O	GPIO
B	PB7-PB6	[PB7:PB6]	■	■	■																		I/O	GPIO
	PB5	$\overline{\text{XIRQ}}$	■	■	■																		I	Non-maskable level-sensitive interrupt
		[PB5]	■	■	■																		I/O	GPIO
	PB4	$\overline{\text{IRQ}}$	■	■	■																		I	Maskable level- or falling-edge sensitive interrupt
		[PB4]	■	■	■																		I/O	GPIO
	PB3	[PB3]	■	■	■																		I/O	GPIO
	PB2	ECLKX2	■	■	■																		O	Free-running clock (ECLK x 2)
		[PB2]	■	■	■																		I/O	GPIO
	PB1	API_EXTCLK	□	□	□																		O	API Clock
		[PB1]	■	■	■																		I/O	GPIO
	PB0	ECLK	■	■	■																		O	Free-running clock
		[PB0]	■	■	■																		I/O	GPIO
C	PC7	DACU1	■																				O	DAC1 output unbuffered
		[PC7]	■	■	■																		I/O	GPIO
	PC6	AMPP1	■																				I	DAC1 non-inv. input (+)
		[PC6]	■	■	■																		I/O	GPIO
	PC5	AMPM1	■																				I	DAC1 inverting input (-)
		[PC5]	■	■	■																		I/O	GPIO
	PC4-PC2	AN15-AN13	❍	❍																			I	ADC analog
		[PC4:PC2]	■	■	■																		I/O	GPIO
	PC1-PC0	AN11-AN10	❍	❍																			I	ADC analog
		[PC1:PC0]	■	■	■																		I/O	GPIO
D	PD7-PD0	[PD7:PD0]	■	■	■																		I/O	GPIO

Legend	
■	Signal available on pin
❍	Routing option on pin
□	Routing reset location
	Not available on pin

Table 2-4. Signals and Priorities

Port	Pin	Signal	Signals per Device and Package (signal priority on pin from top to bottom)																				I/O	Description
			GA240 / GA192	G240 / G192	G128 / GA128 / G96 / GA96	GA240 / GA192	G240 / G192	G128 / GA128 / G96 / GA96	G64 / GA64 / G48 / GA48	GN48	GA240 / GA192	G240 / G192	G128 / GA128 / G96 / GA96	G64 / GA64 / G48 / GA48	GN48	GN32 / GNA32	GN16 / GNA16	G64 / G48	GN48	GN32	GN16	GN32	GN16		
			100			64					48							32				20			
E	PE1	XTAL	■	■	■	■	■	■	■	■	■	■	■	■	■	■	■	■	■	■	■	■	■	-	CPMU OSC signal
		TXD0																				□	□	I/O	SCI transmit
		IOC3																				❍	❍	I/O	Timer channel
		PWM1																				■	■	O	PWM channel
		ETRIG1																				■	■	I	ADC external trigger
		[PE1]	■	■	■	■	■	■	■	■	■	■	■	■	■	■	■	■	■	■	■	■	■	I/O	GPIO
	PE0	EXTAL	■	■	■	■	■	■	■	■	■	■	■	■	■	■	■	■	■	■	■	■	■	-	CPMU OSC signal
		RXD0																				□	□	I	SCI receive
		IOC2																				❍	❍	I/O	Timer channel
		PWM0																				■	■	O	PWM channel
		ETRIG0																				■	■	I	ADC external trigger
		[PE0]	■	■	■	■	■	■	■	■	■	■	■	■	■	■	■	■	■	■	■	■	■	I/O	GPIO
T	PT7-PT6	IOC7-IOC6	■	■	■	■	■	■																I/O	Timer channel
		[PTT7:PTT6]	■	■	■	■	■	■	■	■														I/O	GPIO
	PT5-PT4	IOC5-IOC4	■	■	■	■	■	■	■	■	■	■	■	■	■	■	■							I/O	Timer channel
		[PTT5:PTT4]	■	■	■	■	■	■	■	■	■	■	■	■	■	■	■							I/O	GPIO
	PT3-PT2	IOC3-IOC2	■	■	■	■	■	■	■	■	■	■	■	■	■	■	■	■	■	■	■			I/O	Timer channel
		[PTT3:PTT2]	■	■	■	■	■	■	■	■	■	■	■	■	■	■	■	■	■	■	■			I/O	GPIO
	PT1	$\overline{\text{IRQ}}$				■	■	■	■	■	■	■	■	■	■	■	■	■	■	■	■	■	■	I	Maskable level- or falling-edge sensitive interrupt
		IOC1	■	■	■	■	■	■	■	■	■	■	■	■	■	■	■	■	■	■	■	■	■	I/O	Timer channel
		[PTT1]	■	■	■	■	■	■	■	■	■	■	■	■	■	■	■	■	■	■	■	■	■	I/O	GPIO
	PT0	$\overline{\text{XIRQ}}$				■	■	■	■	■	■	■	■	■	■	■	■	■	■	■	■	■	■	I	Non-maskable level-sensitive interrupt
		IOC0	■	■	■	■	■	■	■	■	■	■	■	■	■	■	■	■	■	■	■	■	■	I/O	Timer channel
		[PTT0]	■	■	■	■	■	■	■	■	■	■	■	■	■	■	■	■	■	■	■	■	■	I/O	GPIO

Legend	
■	Signal available on pin
❍	Routing option on pin
□	Routing reset location
	Not available on pin

Table 2-4. Signals and Priorities

Port	Pin	Signal	Signals per Device and Package (signal priority on pin from top to bottom)																				I/O	Description
			GA240 / GA192	G240 / G192	G128 / GA128 / G96 / GA96	GA240 / GA192	G240 / G192	G128 / GA128 / G96 / GA96	G64 / GA64 / G48 / GA48	GN48	GA240 / GA192	G240 / G192	G128 / GA128 / G96 / GA96	G64 / GA64 / G48 / GA48	GN48	GN32 / GNA32	GN16 / GNA16	G64 / G48	GN48	GN32	GN16	GN32	GN16		
			100			64					48							32				20			
S	PS7	$\overline{SS0}$	■	■	■	■	■	■	■	■	■	■	■	■	■	■	■	■	■	■	■	■	■	I/O	SPI slave select
		TXD0																				❍	❍	I/O	SCI transmit
		PWM5																■	■	■	■			O	PWM channel
		PWM3																				□	□	O	PWM channel
		ECLK				■	■	■	■	■	■	■	■	■	■	■	■	■	■	■	■	■	■	O	Free-running clock
		API_EXTCLK	❍	❍	❍	❍	❍	❍	❍	❍	❍	❍	❍	❍	❍	❍	❍	❍	❍	❍	❍	❍	❍	O	API Clock
		ETRIG3																				□	□	I	ADC external trigger
		[PTS7]	■	■	■	■	■	■	■	■	■	■	■	■	■	■	■	■	■	■	■	■	■	I/O	GPIO
	PS6	SCK0	■	■	■	■	■	■	■	■	■	■	■	■	■	■	■	■	■	■	■	■	■	I/O	SPI serial clock
		IOC5																■	■	■	■			I/O	Timer channel
		IOC3																				□	□	I/O	Timer channel
		[PTS6]	■	■	■	■	■	■	■	■	■	■	■	■	■	■	■	■	■	■	■	■	■	I/O	GPIO
	PS5	MOSI0	■	■	■	■	■	■	■	■	■	■	■	■	■	■	■	■	■	■	■	■	■	I/O	SPI master out/slave in
		IOC4																■	■	■	■			I/O	Timer channel
		IOC2																				□	□	I/O	Timer channel
		[PTS5]	■	■	■	■	■	■	■	■	■	■	■	■	■	■	■	■	■	■	■	■	■	I/O	GPIO
	PS4	MISO0	■	■	■	■	■	■	■	■	■	■	■	■	■	■	■	■	■	■	■	■	■	I/O	SPI master in/slave out
		RXD0																				❍	❍	I	SCI receive pin
		PWM4																■	■	■	■			O	PWM channel
		PWM2																				□	□	O	PWM channel
		ETRIG2																				□	□	I	ADC external trigger
		[PTS4]	■	■	■	■	■	■	■	■	■	■	■	■	■	■	■	■	■	■	■	■	■	I/O	GPIO
	PS3	TXD1	■	■	■	■	■	■	■	■	■	■	■	■	■									I/O	SCI transmit
		[PTS3]	■	■	■	■	■	■	■	■	■	■	■	■	■	■	■							I/O	GPIO
	PS2	RXD1	■	■	■	■	■	■	■	■	■	■	■	■	■									I	SCI receive
		[PTS2]	■	■	■	■	■	■	■	■	■	■	■	■	■	■	■							I/O	GPIO
	PS1	TXD0	■	■	■	■	■	■	■	■	■	■	■	■	■	■	■	■	■	■	■			I/O	SCI transmit
		[PTS1]	■	■	■	■	■	■	■	■	■	■	■	■	■	■	■	■	■	■	■			I/O	GPIO
	PS0	RXD0	■	■	■	■	■	■	■	■	■	■	■	■	■	■	■	■	■	■	■			I	SCI receive
		[PTS0]	■	■	■	■	■	■	■	■	■	■	■	■	■	■	■	■	■	■	■			I/O	GPIO

Legend

■	Signal available on pin
❍	Routing option on pin
□	Routing reset location
	Not available on pin

Table 2-4. Signals and Priorities

Port	Pin	Signal	Signals per Device and Package (signal priority on pin from top to bottom)																						I/O	Description
			GA240 / GA192	G240 / G192	G128 / GA128 / G96 / GA96	GA240 / GA192	G240 / G192	G128 / GA128 / G96 / GA96	G64 / GA64 / G48 / GA48	GN48	GA240 / GA192	G240 / G192	G128 / GA128 / G96 / GA96	G64 / GA64 / G48 / GA48	GN48	GN32 / GNA32	GN16 / GNA16	G64 / G48	GN48	GN32	GN16	GN32	GN16		
			100			64					48							32				20			
M	PM3	TXD2	■	■	■	■	■	■																I/O	SCI transmit
		[PTM3]	■	■	■	■	■	■	■	■														I/O	GPIO
	PM2	RXD2	■	■	■	■	■	■																I	SCI receive
		[PTM2]	■	■	■	■	■	■	■	■														I/O	GPIO
	PM1	TXCAN	■	■	■	■	■	■	■		■	■	■	■				■						O	MSCAN transmit
		TXD2									■	■	■											I/O	SCI transmit
		TXD1																■	■					I/O	SCI transmit
		[PTM1]	■	■	■	■	■	■	■	■	■	■	■	■	■	■	■	■	■	■	■			I/O	GPIO
	PM0	RXCAN	■	■	■	■	■	■	■		■	■	■	■				■						I	MSCAN receive
		RXD2									■	■	■											I	SCI receive
		RXD1																■	■					I	SCI receive
		[PTM0]	■	■	■	■	■	■	■	■	■	■	■	■	■	■	■	■	■	■	■			I/O	GPIO

Legend

■	Signal available on pin
❍	Routing option on pin
☐	Routing reset location
	Not available on pin

Table 2-4. Signals and Priorities

Port	Pin	Signal	Signals per Device and Package (signal priority on pin from top to bottom)																				I/O	Description
			GA240 / GA192	G240 / G192	G128 / GA128 / G96 / GA96	GA240 / GA192	G240 / G192	G128 / GA128 / G96 / GA96	G64 / GA64 / G48 / GA48	GN48	GA240 / GA192	G240 / G192	G128 / GA128 / G96 / GA96	G64 / GA64 / G48 / GA48	GN48	GN32 / GNA32	GN16 / GNA16	G64 / G48	GN48	GN32	GN16	GN32	GN16		
			100			64					48							32				20			
P	PP7-PP6	PWM7-PWM6	■	■	■	■	■	■																O	PWM channel
		[PTP7:PTP6]/ KWP7-KWP6	■	■	■	■	■	■	■	■														I/O	GPIO with interrupt
	PP5-PP4	PWM5-PWM4	■	■	■	■	■	■	■	■	■	■	■	■	■	■	■							O	PWM channel
		[PTP5:PTP4]/ KWP5-KWP4	■	■	■	■	■	■	■	■	■	■	■	■	■	■	■							I/O	GPIO with interrupt
	PP3-PP2	PWM3-PWM2	■	■	■	■	■	■	■	■	■	■	■	■	■	■	■	■	■	■	■			O	PWM channel
		ETRIG3-ETRIG2	■	■	■	■	■	■	■	■	■	■	■	■	■	■	■	■	■	■	■			I	ADC external trigger
		[PTP3:PTP2]/ KWP3-KWP2	■	■	■	■	■	■	■	■	■	■	■	■	■	■	■	■	■	■	■			I/O	GPIO with interrupt
	PP1	PWM1	■	■	■	■	■	■	■	■	■	■	■	■	■	■	■	■	■	■	■			O	PWM channel
		ECLKX2				■	■	■	■	■	■	■	■	■	■	■	■	■	■	■	■			O	Free-running clock (ECLK x 2)
		ETRIG1	■	■	■	■	■	■	■	■	■	■	■	■	■	■	■	■	■	■	■			I	ADC external trigger
		[PTP1]/ KWP1	■	■	■	■	■	■	■	■	■	■	■	■	■	■	■	■	■	■	■			I/O	GPIO with interrupt
	PP0	PWM0	■	■	■	■	■	■	■	■	■	■	■	■	■	■	■	■	■	■	■			O	PWM channel
		API_EXTCLK				□	□	□	□	□	□	□	□	□	□	□	□	□	□	□	□			O	API Clock
		ETRIG0	■	■	■	■	■	■	■	■	■	■	■	■	■	■	■	■	■	■	■			I	ADC external trigger
		[PTP0]/ KWP0	■	■	■	■	■	■	■	■	■	■	■	■	■	■	■	■	■	■	■			I/O	GPIO with interrupt

Legend

■	Signal available on pin
❍	Routing option on pin
□	Routing reset location
	Not available on pin

Table 2-4. Signals and Priorities

Port	Pin	Signal	Signals per Device and Package (signal priority on pin from top to bottom)																				I/O	Description
			GA240 / GA192	G240 / G192	G128 / GA128 / G96 / GA96	GA240 / GA192	G240 / G192	G128 / GA128 / G96 / GA96	G64 / GA64 / G48 / GA48	GN48	GA240 / GA192	G240 / G192	G128 / GA128 / G96 / GA96	G64 / GA64 / G48 / GA48	GN48	GN32 / GNA32	GN16 / GNA16	G64 / G48	GN48	GN32	GN16	GN32	GN16		
			100			64					48							32				20			
J	PJ7	$\overline{SS2}$	■	■	■	■	■	■																I/O	SPI slave select
		[PTJ7]/ KWJ7	■	■	■	■	■	■	■	■														I/O	GPIO with interrupt
	PJ6	SCK2	■	■	■	■	■	■																I/O	SPI serial clock
		[PTJ6]/ KWJ6	■	■	■	■	■	■	■	■														I/O	GPIO with interrupt
	PJ5	MOSI2	■	■	■	■	■	■																I/O	SPI master out/slave in
		[PTJ5]/ KWJ5	■	■	■	■	■	■	■	■														I/O	GPIO with interrupt
	PJ4	MISO2	■	■	■	■	■	■																I/O	SPI master in/slave out
		[PTJ4]/ KWJ4	■	■	■	■	■	■	■	■														I/O	GPIO with interrupt
	PJ3	$\overline{SS1}$	■	■	■	■	■	■	■	■	■	■	■	■	■									I/O	SPI slave select
		PWM7									■	■	■											O	PWM channel
		[PTJ3]/ KWJ3	■	■	■	■	■	■	■	■	■	■	■	■	■	■	■							I/O	GPIO with interrupt
	PJ2	SCK1	■	■	■	■	■	■	■	■	■	■	■	■	■									I/O	SPI serial clock
		IOC7									■	■	■											I/O	Timer channel
		[PTJ2]/ KWJ2	■	■	■	■	■	■	■	■	■	■	■	■	■	■	■							I/O	GPIO with interrupt
	PJ1	MOSI1	■	■	■	■	■	■	■	■	■	■	■	■	■									I/O	SPI master out/slave in
		IOC6									■	■	■											I/O	Timer channel
		[PTJ1]/ KWJ1	■	■	■	■	■	■	■	■	■	■	■	■	■	■	■							I/O	GPIO with interrupt
	PJ0	MISO1	■	■	■	■	■	■	■	■	■	■	■	■	■									I/O	SPI master in/slave out
		PWM6									■	■	■											I/O	Timer channel
		[PTJ0]/ KWJ0	■	■	■	■	■	■	■	■	■	■	■	■	■	■	■							I/O	GPIO with interrupt

Legend

■	Signal available on pin
❍	Routing option on pin
□	Routing reset location
	Not available on pin

Table 2-4. Signals and Priorities

Port	Pin	Signal	Signals per Device and Package (signal priority on pin from top to bottom)																				I/O	Description
			GA240 / GA192	G240 / G192	G128 / GA128 / G96 / GA96	GA240 / GA192	G240 / G192	G128 / GA128 / G96 / GA96	G64 / GA64 / G48 / GA48	GN48	GA240 / GA192	G240 / G192	G128 / GA128 / G96 / GA96	G64 / GA64 / G48 / GA48	GN48	GN32 / GNA32	GN16 / GNA16	G64 / G48	GN48	GN32	GN16	GN32	GN16		
			100			64					48							32				20			
AD	PAD15	DACU0	■			■																		O	DAC0 output unbuffered
		AN15	□	□		■	■																	I	ADC analog
		[PT0AD7]/ KWAD15	■	■	■	■	■	■	■	■														I/O	GPIO with interrupt
	PAD14	AMPP0	■			■																		I	DAC0 non-inv. input (+)
		AN14	□	□		■	■																	I	ADC analog
		[PT0AD6]/ KWAD14	■	■	■	■	■	■	■	■														I/O	GPIO with interrupt
	PAD13	AMPM0	■			■																		I	DAC0 inverting input (-)
		AN13	□	□		■	■																	I	ADC analog
		[PT0AD5]/ KWAD13	■	■	■	■	■	■	■	■														I/O	GPIO with interrupt
	PAD12	AN12	■	■		■	■																	I	ADC analog
		[PT0AD4]/ KWAD12	■	■	■	■	■	■	■	■														I/O	GPIO with interrupt
	PAD11	AMP0	■			■					■													O	DAC0 output buffered
		DACU0									■													O	DAC0 output unbuffered
		ACMPM							■	■				■	■	■	■							I	ACMP inverting input (-)
		AN11	□	□	■	■	■	■	■	■	■	■	■	■	■									I	ADC analog
		[PT0AD3]/ KWAD11	■	■	■	■	■	■	■	■	■	■	■	■	■	■	■							I/O	GPIO with interrupt
	PAD10	AMP1	■			■					■													O	DAC1 output buffered
		DACU1				■					■													O	DAC1 output unbuffered
		ACMPP							■	■				■	■	■	■							I	ACMP non-inv. input (+)
		AN10	□	□	■	■	■	■	■	■	■	■	■	■	■									I	ADC analog
		[PT0AD2]/ KWAD10	■	■	■	■	■	■	■	■	■	■	■	■	■	■	■							I/O	GPIO with interrupt
	PAD9	ACMPO							■	■				■	■	■	■							O	ACMP unsync. dig. out
		AN9	■	■	■	■	■	■	■	■	■	■	■	■	■									I	ADC analog
		[PT0AD1]/ KWAD9	■	■	■	■	■	■	■	■	■	■	■	■	■	■	■							I/O	GPIO with interrupt
	PAD8	AN8	■	■	■	■	■	■	■	■	■	■	■	■	■									I	ADC analog

Legend

■	Signal available on pin
❍	Routing option on pin
□	Routing reset location
	Not available on pin

Table 2-4. Signals and Priorities

Port	Pin	Signal	Signals per Device and Package (signal priority on pin from top to bottom)																				I/O	Description
			GA240 / GA192	G240 / G192	G128 / GA128 / G96 / GA96	GA240 / GA192	G240 / G192	G128 / GA128 / G96 / GA96	G64 / GA64 / G48 / GA48	GN48	GA240 / GA192	G240 / G192	G128 / GA128 / G96 / GA96	G64 / GA64 / G48 / GA48	GN48	GN32 / GNA32	GN16 / GNA16	G64 / G48	GN48	GN32	GN16	GN32	GN16		
			100			64					48							32				20			
AD	PAD7	ACMPM																■	■	■	■			I	ACMP inverting input (-)
		AN7	■	■	■	■	■	■	■	■	■	■	■	■	■	■	■	■	■	■	■			I	ADC analog
		[PT1AD7]/ KWAD7	■	■	■	■	■	■	■	■	■	■	■	■	■	■	■	■	■	■	■			I/O	GPIO with interrupt
	PAD6	ACMPP																■	■	■	■			I	ACMP non-inv. input (+)
		AN6	■	■	■	■	■	■	■	■	■	■	■	■	■	■	■	■	■	■	■			I	ADC analog
		[PT1AD6]/ KWAD6	■	■	■	■	■	■	■	■	■	■	■	■	■	■	■	■	■	■	■			I/O	GPIO with interrupt
	PAD5	ACMPO																■	■	■	■			O	ACMP unsync. dig. out
		ACMPM																				■	■	I	ACMP inverting input (-)
		AN5	■	■	■	■	■	■	■	■	■	■	■	■	■	■	■	■	■	■	■	■	■	I	ADC analog
		TXD0																				❍	❍	I/O	SCI transmit
		IOC3																				❍	❍	I/O	Timer channel
		PWM3																				❍	❍	O	PWM channel
		ETRIG3																				❍	❍	I	ADC external trigger
		[PT1AD5]/ KWAD5	■	■	■	■	■	■	■	■	■	■	■	■	■	■	■	■	■	■	■	■	■	I/O	GPIO with interrupt
	PAD4	ACMPP																				■	■	I	ACMP non-inv. input (+)
		AN4	■	■	■	■	■	■	■	■	■	■	■	■	■	■	■	■	■	■	■	■	■	I	ADC analog
		RXD0																				❍	❍	I	SCI receive
		IOC2																				❍	❍	I/O	Timer channel
		PWM2																				❍	❍	O	PWM channel
		ETRIG2																				❍	❍	I	ADC external trigger
		[PT1AD4]/ KWAD4	■	■	■	■	■	■	■	■	■	■	■	■	■	■	■	■	■	■	■	■	■	I/O	GPIO with interrupt
	PAD3	ACMPO																				■	■	O	ACMP unsync. dig. out
		AN3	■	■	■	■	■	■	■	■	■	■	■	■	■	■	■	■	■	■	■	■	■	I	ADC analog
		[PT1AD3]/ KWAD3	■	■	■	■	■	■	■	■	■	■	■	■	■	■	■	■	■	■	■	■	■	I/O	GPIO with interrupt
	PAD2-PAD0	AN2-AN0	■	■	■	■	■	■	■	■	■	■	■	■	■	■	■	■	■	■	■	■	■	I	ADC analog
		[PT1AD2: PT1AD0]/ KWAD2-KWAD0	■	■	■	■	■	■	■	■	■	■	■	■	■	■	■	■	■	■	■	■	■	I/O	GPIO with interrupt

Legend

■	Signal available on pin
❍	Routing option on pin
□	Routing reset location
	Not available on pin

This section describes the signals available on each pin.

Although trying to enable multiple signals on a shared pin is not a proper use case in most applications, the resulting pin function will be determined by a predefined priority scheme as defined in 2.2.2 and 2.2.3.

Only enabled signals arbitrate for the pin and the highest priority defines its data direction and output value if used as output. Signals with programmable routing options are assumed to select the appropriate target pin to participate in the arbitration.

The priority is represented for each pin with shared signals from highest to lowest in the following format:

```
SignalA > SignalB > GPO
```

Here SignalA has priority over SignalB and general-purpose output function (GPO; represented by related port data register bit). The general-purpose output is always of lowest priority if no other signal is enabled.

Peripheral input signals on shared pins are always connected monitoring the pin level independent of their use.

2.3.1 Pin BKGD

Table 2-5. Pin BKGD

BKGD	• The BKGD pin is associated with the BDM module in all packages. During reset, the BKGD pin is used as MODC input.

2.3.2 Pins PA7-0

Table 2-6. Port A Pins PA7-0

PA7-PA0	• These pins feature general-purpose I/O functionality only.

2.3.3 Pins PB7-0

Table 2-7. Port B Pins PB7-0

PB7-PB6	• These pins feature general-purpose I/O functionality only.
PB5	• 100 LQFP: The $\overline{\text{XIRQ}}$ signal is mapped to this pin when used with the XIRQ interrupt function. The interrupt is enabled by clearing the X mask bit in the CPU Condition Code register. The I/O state of the pin is forced to input level upon the first clearing of the X bit and held in this state even if the bit is set again. A STOP or WAIT recovery with the X bit set (refer to CPU12/CPU12X Reference Manual) is not available. • Signal priority: 100 LQFP: $\overline{\text{XIRQ}}$ > GPO
PB4	• 100 LQFP: The $\overline{\text{IRQ}}$ signal is mapped to this pin when used with the IRQ interrupt function. If enabled (IRQEN=1) the I/O state of the pin is forced to be an input. • Signal priority: 100 LQFP: $\overline{\text{IRQ}}$ > GPO
PB3	• This pin features general-purpose I/O functionality only.
PB2	• 100 LQFP: The ECLKX2 signal is mapped to this pin when used with the external clock function. The enabled ECLKX2 signal forces the I/O state to an output. • Signal priority: 100 LQFP: ECLKX2 > GPO
PB1	• 100 LQFP: The API_EXTCLK signal is mapped to this pin when used with the external clock function. If the Autonomous Periodic Interrupt clock is enabled and routed here the I/O state is forced to output. • Signal priority: 100 LQFP: API_EXTCLK > GPO
PB0	• 100 LQFP: The ECLK signal is mapped to this pin when used with the external clock function. The enabled ECLK signal forces the I/O state to an output. • Signal priority: 100 LQFP: ECLK > GPO

2.3.4 Pins PC7-0

NOTE

- When using AMPM1, AMPP1 or DACU1 please refer to section 2.6.1, “Initialization”.

- When routing of ADC channels to PC4-PC0 is selected (PRR1[PRR1AN]=1) the related bit in the ADC Digital Input Enable Register (ATDDIEN) must be set to 1 to activate the digital input function on those pins not used as ADC inputs. If the external trigger source is one of the ADC channels, the digital input buffer of this channel is automatically enabled.

Table 2-8. Port C Pins PC7-0

PC7	• 100 LQFP: The unbuffered analog output signal DACU1 of the DAC1 module is mapped to this pin if the DAC is operating in “unbuffered DAC” mode. If this pin is used with the DAC then the digital I/O function and pull device are disabled. • Signal priority: 100 LQFP: DACU1 > GPO
PC6	• 100 LQFP: The non-inverting analog input signal AMPP1 of the DAC1 module is mapped to this pin if the DAC is operating in “unbuffered DAC with operational amplifier” or “operational amplifier only” mode. If this pin is used with the DAC then the digital input buffer is disabled. • Signal priority: 100 LQFP: GPO
PC5	• 100 LQFP: The inverting analog input signal AMPM1 of the DAC1 module is mapped to this pin if the DAC is operating in “unbuffered DAC with operational amplifier” or “operational amplifier only” mode. If this pin is used with the DAC then the digital input buffer is disabled. • Signal priority: 100 LQFP: GPO
PC4-PC2	• 100 LQFP: If routing is active (PRR1[PRR1AN]=1) the ADC analog input channel signals AN15-13 and their related digital trigger inputs are mapped to these pins. The routed ADC function has no effect on the output state. Refer to NOTE/2-163 for input buffer control. • Signal priority: 100 LQFP: GPO
PC1-PC0	• 100 LQFP: If routing is active (PRR1[PRR1AN]=1) the ADC analog input channel signals AN11-10 and their related digital trigger inputs are mapped to these pins. The routed ADC function has no effect on the output state. Refer to NOTE/2-163 for input buffer control. • Signal priority: 100 LQFP: GPO

2.3.5 Pins PD7-0

Table 2-9. Port D Pins PD7-0

PD7-PD0	• These pins feature general-purpose I/O functionality only.

2.3.6 Pins PE1-0

Table 2-10. Port E Pins PE1-0

PE1	• If the CPMU OSC function is active this pin is used as XTAL signal and the pulldown device is disabled. • 20 TSSOP: The SCI0 TXD signal is mapped to this pin when used with the SCI function. If the SCI0 TXD signal is enabled and routed here the I/O state will depend on the SCI0 configuration. • 20 TSSOP: The TIM channel 3 signal is mapped to this pin when used with the timer function. The TIM forces the I/O state to be an output for a timer port associated with an enabled output compare. • 20 TSSOP: The PWM channel 1 signal is mapped to this pin when used with the PWM function. The enabled PWM channel forces the I/O state to be an output. • 20 TSSOP: The ADC ETRIG1 signal is mapped to this pin when used with the ADC function. The enabled external trigger function has no effect on the I/O state. Refer to Section 2.6.4, “ADC External Triggers ETRIG3-0”. • Signal priority: 20 TSSOP: XTAL > TXD0 > IOC3 > PWM1 > GPO Others: XTAL > GPO
PE0	• If the CPMU OSC function is active this pin is used as EXTAL signal and the pulldown device is disabled. • 20 TSSOP: The SCI0 RXD signal is mapped to this pin when used with the SCI function. If the SCI0 RXD signal is enabled and routed here the I/O state will be forced to input. • 20 TSSOP: The TIM channel 2 signal is mapped to this pin when used with the timer function. The TIM forces the I/O state to be an output for a timer port associated with an enabled output compare. • 20 TSSOP: The PWM channel 0 signal is mapped to this pin when used with the PWM function. The enabled PWM channel forces the I/O state to be an output. • 20 TSSOP: The ADC ETRIG0 signal is mapped to this pin when used with the ADC function. The enabled external trigger function has no effect on the I/O state. Refer to Section 2.6.4, “ADC External Triggers ETRIG3-0”. • Signal priority: 20 TSSOP: EXTAL > RXD0 > IOC2 > PWM0 > GPO Others: EXTAL > GPO

2.3.7 Pins PT7-0

Table 2-11. Port T Pins PT7-0

PT7-PT6	• 64/100 LQFP: The TIM channels 7 and 6 signal are mapped to these pins when used with the timer function. The TIM forces the I/O state to be an output for a timer port associated with an enabled output compare. • Signal priority: 64/100 LQFP: IOC7-6 > GPO
PT5	• 48/64/100 LQFP: The TIM channel 5 signal is mapped to this pin when used with the timer function. The TIM forces the I/O state to be an output for a timer port associated with an enabled output compare. If the ACMP timer link is enabled this pin is disconnected from the timer input so that it can still be used as general-purpose I/O or as timer output. The use case for the ACMP timer link requires the timer input capture function to be enabled. • Signal priority: 48/64/100 LQFP: IOC5 > GPO

Table 2-11. Port T Pins PT7-0 (continued)

PT4	• 48/64/100 LQFP: The TIM channel 4 signal is mapped to this pin when used with the timer function. The TIM forces the I/O state to be an output for a timer port associated with an enabled output compare. • Signal priority: 48/64/100 LQFP: IOC4 > GPO
PT3-PT2	• Except 20 TSSOP: The TIM channels 3 and 2 signal are mapped to these pins when used with the timer function. The TIM forces the I/O state to be an output for a timer port associated with an enabled output compare. • Signal priority: Except 20 TSSOP: IOC3-2 > GPO
PT1	• Except 100 LQFP: The $\overline{\text{IRQ}}$ signal is mapped to this pin when used with the IRQ interrupt function. If enabled (IRQCR[IRQEN]=1) the I/O state of the pin is forced to be an input. • The TIM channel 1 signal is mapped to this pin when used with the timer function. The TIM forces the I/O state to be an output for a timer port associated with an enabled output compare. • Signal priority: 100 LQFP: IOC1 > GPO Others: $\overline{\text{IRQ}}$ > IOC1 > GPO
PT0	• Except 100 LQFP: The $\overline{\text{XIRQ}}$ signal is mapped to this pin when used with the XIRQ interrupt function.The interrupt is enabled by clearing the X mask bit in the CPU Condition Code register. The I/O state of the pin is forced to input level upon the first clearing of the X bit and held in this state even if the bit is set again. A STOP or WAIT recovery with the X bit set (refer to CPU12/CPU12X Reference Manual) is not available. • The TIM channel 0 signal is mapped to this pin when used with the timer function. The TIM forces the I/O state to be an output for a timer port associated with an enabled output compare. • Signal priority: 100 LQFP: IOC0 > GPO Others: $\overline{\text{XIRQ}}$ > IOC0 > GPO

2.3.8 Pins PS7-0

Table 2-12. Port S Pins PS7-0

PS7	• The SPI0 $\overline{SS}$ signal is mapped to this pin when used with the SPI function. Depending on the configuration of the enabled SPI0 the I/O state is forced to be input or output. • 20 TSSOP: The SCI0 TXD signal is mapped to this pin when used with the SCI function. If the SCI0 TXD signal is enabled and routed here the I/O state will depend on the SCI0 configuration. • 20 TSSOP: The PWM channel 3 signal is mapped to this pin when used with the PWM function. If the PWM channel is enabled and routed here the I/O state is forced to output.The enabled PWM channel forces the I/O state to be an output. • 32 LQFP: The PWM channel 5 signal is mapped to this pin when used with the PWM function. The enabled PWM channel forces the I/O state to be an output. • 64/48/32/20 LQFP: The ECLK signal is mapped to this pin when used with the external clock function. If the ECLK output is enabled the I/O state will be forced to output. • The API_EXTCLK signal is mapped to this pin when used with the external clock function. If the Autonomous Periodic Interrupt clock is enabled and routed here the I/O state is forced to output. • 20 TSSOP: The ADC ETRIG3 signal is mapped to this pin if PWM channel 3 is routed here. The enabled external trigger function has no effect on the I/O state. Refer to Section 2.6.4, “ADC External Triggers ETRIG3-0”. • Signal priority: 20 TSSOP: $\overline{SS0}$ > TXD0 > PWM3 > ECLK > API_EXTCLK > GPO 32 LQFP: $\overline{SS0}$ > PWM5 > ECLK > API_EXTCLK > GPO 48/64 LQFP: $\overline{SS0}$ > ECLK > API_EXTCLK > GPO 100 LQFP: $\overline{SS0}$ > API_EXTCLK > GPO
PS6	• The SPI0 SCK signal is mapped to this pin when used with the SPI function. Depending on the configuration of the enabled SPI0 the I/O state is forced to be input or output. • 20 TSSOP: The TIM channel 3 signal is mapped to this pin when used with the timer function. If the TIM output compare signal is enabled and routed here the I/O state will be forced to output. • 32 LQFP: The TIM channel 5 signal is mapped to this pin when used with the timer function. If the TIM output compare signal is enabled and routed here the I/O state will be forced to output. If the ACMP timer link is enabled this pin is disconnected from the timer input so that it can still be used as general-purpose I/O or as timer output. The use case for the ACMP timer link requires the timer input capture function to be enabled. • Signal priority: 20 TSSOP: SCK0 > IOC3 > GPO 32 LQFP: SCK0 > IOC5 > GPO Others: SCK0 > GPO
PS5	• The SPI0 MOSI signal is mapped to this pin when used with the SPI function. Depending on the configuration of the enabled SPI0 the I/O state is forced to be input or output. • 20 TSSOP: The TIM channel 2 signal is mapped to this pin when used with the timer function. If the TIM output compare signal is enabled and routed here the I/O state will be forced to output. • 32 LQFP: The TIM channel 4 signal is mapped to this pin when used with the timer function. If the TIM output compare signal is enabled and routed here the I/O state will be forced to output. • Signal priority: 20 TSSOP: MOSI0 > IOC2 > GPO 32 LQFP: MOSI0 > IOC4 > GPO Others: MOSI0 > GPO

Table 2-12. Port S Pins PS7-0 (continued)

PS4	• The SPI0 MISO signal is mapped to this pin when used with the SPI function. Depending on the configuration of the enabled SPI0 the I/O state is forced to be input or output. • 20 TSSOP: The SCI0 RXD signal is mapped to this pin when used with the SCI function. If the SCI0 RXD signal is enabled and routed here the I/O state will be forced to input. • 20 TSSOP: The PWM channel 2 signal is mapped to this pin when used with the PWM function. If the PWM channel is enabled and routed here the I/O state is forced to output. • 32 LQFP: The PWM channel 4 signal is mapped to this pin when used with the PWM function. The enabled PWM channel forces the I/O state to be an output. • 20 TSSOP: The ADC ETRIG2 signal is mapped to this pin if PWM channel 2 is routed here. The enabled external trigger function has no effect on the I/O state. Refer to Section 2.6.4, “ADC External Triggers ETRIG3-0”. • Signal priority: 20 TSSOP: MISO0 > RXD0 > PWM2 > GPO 32 LQFP: MISO0 > PWM4 > GPO Others: MISO0 > GPO
PS3	• Except 20 TSSOP and 32 LQFP: The SCI1 TXD signal is mapped to this pin when used with the SCI function. If the SCI1 TXD signal is enabled the I/O state will depend on the SCI1 configuration. • Signal priority: 48/64/100 LQFP: TXD1 > GPO
PS2	• Except 20 TSSOP and 32 LQFP: The SCI1 RXD signal is mapped to this pin when used with the SCI function. If the SCI1 RXD signal is enabled the I/O state will be forced to be input. • Signal priority: 20 TSSOP and 32 LQFP: GPO Others: RXD1 > GPO
PS1	• Except 20 TSSOP: The SCI0 TXD signal is mapped to this pin when used with the SCI function. If the SCI0 TXD signal is enabled the I/O state will depend on the SCI0 configuration. • Signal priority: Except 20 TSSOP: TXD0 > GPO
PS0	• Except 20 TSSOP: The SCI0 RXD signal is mapped to this pin when used with the SCI function. If the SCI0 RXD signal is enabled the I/O state will be forced to be input. • Signal priority: 20 TSSOP: GPO Others: RXD0 > GPO

2.3.9 Pins PM3-0

Table 2-13. Port M Pins PM3-0

PM3	• 64/100 LQFP: The SCI2 TXD signal is mapped to this pin when used with the SCI function. If the SCI2 TXD signal is enabled the I/O state will depend on the SCI2 configuration. • Signal priority: 64/100 LQFP: TXD2 > GPO
PM2	• 64/100 LQFP: The SCI2 RXD signal is mapped to this pin when used with the SCI function. If the SCI2 RXD signal is enabled the I/O state will be forced to be input. • Signal priority: 64/100 LQFP: RXD2 > GPO
PM1	• Except 20 TSSOP: The TXCAN signal is mapped to this pin when used with the CAN function. The enabled CAN forces the I/O state to be an output. • 32 LQFP: The SCI1 TXD signal is mapped to this pin when used with the SCI function. If the SCI1 TXD signal is enabled the I/O state will depend on the SCI1 configuration. • 48 LQFP: The SCI2 TXD signal is mapped to this pin when used with the SCI function. If the SCI2 TXD signal is enabled the I/O state will depend on the SCI2 configuration. • Signal priority: 32 LQFP: TXCAN > TXD1 > GPO 48 LQFP: TXCAN > TXD2 > GPO 64/100 LQFP: TXCAN > GPO
PM0	• Except 20 TSSOP: The RXCAN signal is mapped to this pin when used with the CAN function. The enabled CAN forces the I/O state to be an input. If CAN is active the selection of a pulldown device on the RXCAN input has no effect. • 32 LQFP: The SCI1 RXD signal is mapped to this pin when used with the SCI function. The enabled SCI1 RXD signal forces the I/O state to an input. • 48 LQFP: The SCI2 RXD signal is mapped to this pin when used with the SCI function. The enabled SCI2 RXD signal forces the I/O state to an input. • Signal priority: 32 LQFP: RXCAN > RXD1 > GPO 48 LQFP: RXCAN > RXD2 > GPO 64/100 LQFP: RXCAN > GPO

2.3.10 Pins PP7-0

Table 2-14. Port P Pins PP7-0

PP7-PP6	• 64/100 LQFP: The PWM channels 7 and 6 signal are mapped to these pins when used with the PWM function. The enabled PWM channel forces the I/O state to be an output. • 64/100 LQFP: Pin interrupts can be generated if enabled in input or output mode. • Signal priority: 64/100 LQFP: PWM > GPO
PP5-PP4	• 48/64/100 LQFP: The PWM channels 5 and 4 signal are mapped to these pins when used with the PWM function. The enabled PWM channel forces the I/O state to be an output. • 48/64/100 LQFP: Pin interrupts can be generated if enabled in input or output mode. • Signal priority: 48/64/100 LQFP: PWM > GPO

Table 2-14. Port P Pins PP7-0 (continued)

PP3-PP2	• Except 20 TSSOP: The PWM channels 3 and 2 signal are mapped to these pins when used with the PWM function. The enabled PWM channel forces the I/O state to be an output. • Except 20 TSSOP: The ADC ETRIG 3 and 2 signal are mapped to these pins when used with the ADC function. The enabled external trigger function has no effect on the I/O state. Refer to Section 2.6.4, “ADC External Triggers ETRIG3-0”. • Except 20 TSSOP: Pin interrupts can be generated if enabled in input or output mode. • Signal priority: Except 20 TSSOP: PWM > GPO
PP1	• Except 20 TSSOP: The PWM channel 1 signal is mapped to this pin when used with the PWM function. The enabled PWM channel forces the I/O state to be an output. • Except 100 LQFP and 20 TSSOP: The ECLKX2 signal is mapped to this pin when used with the external clock function. The enabled ECLKX2 forces the I/O state to an output. • Except 20 TSSOP: The ADC ETRIG1 signal is mapped to this pin when used with the ADC function. The enabled external trigger function has no effect on the I/O state. Refer to Section 2.6.4, “ADC External Triggers ETRIG3-0”. • Except 20 TSSOP: Pin interrupts can be generated if enabled in input or output mode. • Signal priority: Except 100 LQFP and 20 TSSOP: PWM1 > ECLKX2 > GPO 100 LQFP: PWM1 > GPO
PP0	• Except 20 TSSOP: The PWM channel 0 signal is mapped to this pin when used with the PWM function. The enabled PWM channel forces the I/O state to be an output. • Except 100 LQFP and 20 TSSOP: The API_EXTCLK signal is mapped to this pin when used with the external clock function. If the Autonomous Periodic Interrupt clock is enabled and routed here the I/O state is forced to output. • Except 20 TSSOP: The ADC ETRIG0 signal is mapped to this pin when used with the ADC function. The enabled external trigger function has no effect on the I/O state. Refer to Section 2.6.4, “ADC External Triggers ETRIG3-0”. • Except 20 TSSOP: Pin interrupts can be generated if enabled in input or output mode. • Signal priority: Except 100 LQFP and 20 TSSOP: PWM0 > API_EXTCLK > GPO 100 LQFP: PWM0 > GPO

2.3.11 Pins PJ7-0

Table 2-15. Port J Pins PJ7-0

PJ7	• 64/100 LQFP: The SPI2 $\overline{SS}$ signal is mapped to this pin when used with the SPI function. Depending on the configuration of the enabled SPI2 the I/O state is forced to be input or output. • 64/100 LQFP: Pin interrupts can be generated if enabled in input or output mode. • Signal priority: 64/100 LQFP: $\overline{SS2}$ > GPO
PJ6	• 64/100 LQFP: The SPI2 SCK signal is mapped to this pin when used with the SPI function. Depending on the configuration of the enabled SPI2 the I/O state is forced to be input or output. • 64/100 LQFP: Pin interrupts can be generated if enabled in input or output mode. • Signal priority: 64/100 LQFP: SCK2 > GPO
PJ5	• 64/100 LQFP: The SPI2 MOSI signal is mapped to this pin when used with the SPI function. Depending on the configuration of the enabled SPI2 the I/O state is forced to be input or output. • 64/100 LQFP: Pin interrupts can be generated if enabled in input or output mode. • Signal priority: 64/100 LQFP: MOSI2 > GPO
PJ4	• 64/100 LQFP: The SPI2 MISO signal is mapped to this pin when used with the SPI function.Depending on the configuration of the enabled SPI2 the I/O state is forced to be input or output. • 64/100 LQFP: Pin interrupts can be generated if enabled in input or output mode. • Signal priority: 64/100 LQFP: MISO2 > GPO
PJ3	• Except 20 TSSOP and 32 LQFP: The SPI1 $\overline{SS}$ signal is mapped to this pin when used with the SPI function. Depending on the configuration of the enabled SPI1 the I/O state is forced to be input or output. • 48 LQFP: The PWM channel 7 signal is mapped to this pin when used with the PWM function. The enabled PWM channel forces the I/O state to be an output. • Except 20 TSSOP and 32 LQFP: Pin interrupts can be generated if enabled in input or output mode. • Signal priority: 48 LQFP: $\overline{SS1}$ > PWM7 > GPO 64/100 LQFP: $\overline{SS1}$ > GPO
PJ2	• Except 20 TSSOP and 32 LQFP: The SPI1 SCK signal is mapped to this pin when used with the SPI function. Depending on the configuration of the enabled SPI1 the I/O state is forced to be input or output. • 48 LQFP: The TIM channel 7 signal is mapped to this pin when used with the TIM function. The TIM forces the I/O state to be an output for a timer port associated with an enabled output. • Except 20 TSSOP and 32 LQFP: Pin interrupts can be generated if enabled in input or output mode. • Signal priority: 48 LQFP: SCK1 > IOC7 > GPO 64/100 LQFP: SCK1 > GPO

Table 2-15. Port J Pins PJ7-0 (continued)

PJ1	• Except 20 TSSOP and 32 LQFP: The SPI1 MOSI signal is mapped to this pin when used with the SPI function. Depending on the configuration of the enabled SPI1 the I/O state is forced to be input or output. • 48 LQFP: The TIM channel 6 signal is mapped to this pin when used with the timer function. The TIM forces the I/O state to be an output for a timer port associated with an enabled output. • Except 20 TSSOP and 32 LQFP: Pin interrupts can be generated if enabled in input or output mode. • Signal priority: 48 LQFP: MOSI1 > IOC6 > GPO 64/100 LQFP: MOSI1 > GPO
PJ0	• Except 20 TSSOP and 32 LQFP: The SPI1 MISO signal is mapped to this pin when used with the SPI function. Depending on the configuration of the enabled SPI1 the I/O state is forced to be input or output. • 48 LQFP: The PWM channel 6 signal is mapped to this pin when used with the PWM function. The enabled PWM channel forces the I/O state to be an output. • Except 20 TSSOP and 32 LQFP: Pin interrupts can be generated if enabled in input or output mode. • Signal priority: 48 LQFP: MISO1 > PWM6 > GPO 64/100 LQFP: MISO1 > GPO

2.3.12 Pins AD15-0

NOTE

The following sources contribute to enable the input buffers on port AD:

- Digital input enable register bits set for each individual pin in ADC
- External trigger function of ADC enabled on ADC channel
- ADC channels routed to port C freeing up pins
- Digital input enable register set bit in and ACMP

Taking the availability of the different sources on each pin into account the following logic equation must be true to activate the digital input buffer for general-purpose input use:

IBEx = ((ATDDIENH/L[IENx]=1) OR (ATDCTL1[ETRIGSEL]=0 AND ATDCTL2[ETRIGE]=1) OR (PRR1[PRR1AN]=1)) AND (ACDIEN=1) ***Eqn. 2-1***

Table 2-16. Port AD Pins AD15-8

PAD15	• 64/100 LQFP: The unbuffered analog output signal DACU0 of the DAC0 module is mapped to this pin if the DAC is operating in “unbuffered DAC” mode. If this pin is used with the DAC then the digital I/O function and pull device are disabled. • 64/100 LQFP: If routing is inactive (PRR1[PRR1AN]=0) the ADC analog input channel signal AN15 and the related digital trigger input are mapped to this pin. The ADC function has no effect on the output state. Refer to NOTE/2-172 for input buffer control. • 64/100 LQFP: Pin interrupts can be generated if enabled in digital input or output mode. • Signal priority: 64/100 LQFP: DACU0 > GPO
PAD14	• 64/100 LQFP: The non-inverting analog input signal AMPP0 of the DAC0 module is mapped to this pin if the DAC is operating in “unbuffered DAC with operational amplifier” or “operational amplifier only” mode. If this pin is used with the DAC then the digital input buffer is disabled. • 64/100 LQFP: If routing is inactive (PRR1[PRR1AN]=0) the ADC analog input channel signal AN14 and the related digital trigger input are mapped to this pin. The ADC function has no effect on the output state. Refer to NOTE/2-172 for input buffer control. • 64/100 LQFP: Pin interrupts can be generated if enabled in digital input or output mode. • Signal priority: 64/100 LQFP: GPO
PAD13	• 64/100 LQFP: The inverting analog input signal AMPM0 of the DAC0 module is mapped to this pin if the DAC is operating in “unbuffered DAC with operational amplifier” or “operational amplifier only” mode. If this pin is used with the DAC then the digital input buffer is disabled. • 64/100 LQFP: If routing is inactive (PRR1[PRR1AN]=0) the ADC analog input channel signal AN13 and the related digital trigger input are mapped to this pin. The ADC function has no effect on the output state. Refer to NOTE/2-172 for input buffer control. • 64/100 LQFP: Pin interrupts can be generated if enabled in digital input or output mode. • Signal priority: 64/100 LQFP: GPO
PAD12	• 64/100 LQFP: The ADC analog input channel signal AN12 and the related digital trigger input are mapped to this pin. The ADC function has no effect on the output state. Refer to NOTE/2-172 for input buffer control. • 64/100 LQFP: Pin interrupts can be generated if enabled in digital input or output mode. • Signal priority: 64/100 LQFP: GPO

Table 2-16. Port AD Pins AD15-8

PAD11	• 64/100 LQFP: The buffered analog output signal AMP0 of the DAC0 module is mapped to this pin if the DAC is operating in “buffered DAC”, “unbuffered DAC with operational amplifier” or “operational amplifier only” mode. If this pin is used with the DAC then the digital I/O function and pull device are disabled. • 48 LQFP: The buffered analog output signal AMP0 of the DAC0 module is mapped to this pin if the DAC is operating in “buffered DAC”, “unbuffered DAC with operational amplifier”[1] or “operational amplifier only” mode. If this pin is used with the DAC then the digital I/O function and pull device are disabled. • 48 LQFP: The unbuffered analog output signal DACU0 of the DAC0 module is mapped to this pin if the DAC is operating in “unbuffered DAC” mode. If this pin is used with the DAC then the digital output function and pull device are disabled. • 48/64 LQFP: The inverting input signal ACMPM of the analog comparator is mapped to this pin when used with the ACMP function. The ACMP function has no effect on the output state. Refer to NOTE/2-172 for input buffer control. • 48/64/100 LQFP: If routing is inactive (PRR1[PRR1AN]=0) the ADC analog input channel signal AN11 and the related digital trigger input are mapped to this pin. The ADC function has no effect on the output state. Refer to NOTE/2-172 for input buffer control. • 48/64/100 LQFP: Pin interrupts can be generated if enabled in digital input or output mode. • Signal priority: 48 LQFP: AMP0 > DACU0 > GPO 64/100 LQFP: AMP0 > GPO
PAD10	• 100 LQFP: The buffered analog output signal AMP1 of the DAC1 module is mapped to this pin if the DAC is operating in “buffered DAC”, “unbuffered DAC with operational amplifier” or “operational amplifier only” mode. If this pin is used with the DAC then the digital I/O function and pull device are disabled. • 48/64 LQFP: The buffered analog output signal AMP1 of the DAC1 module is mapped to this pin if the DAC is operating in “buffered DAC”, “unbuffered DAC with operational amplifier”[1] or “operational amplifier only” mode. If this pin is used with the DAC then the digital output function and pull device are disabled. • 48/64 LQFP: The unbuffered analog output signal DACU1 of the DAC1 module is mapped to this pin if the DAC is operating in “unbuffered DAC” mode. If this pin is used with the DAC then the digital output function and pull device are disabled. • 48/64 LQFP: The non-inverting input signal ACMPP of the analog comparator is mapped to this pin when used with the ACMP function. The ACMP function has no effect on the output state. Refer to NOTE/2-172 for input buffer control. • 48/64/100 LQFP: If routing is inactive (PRR1[PRR1AN]=0) the ADC analog input channel signal AN10 and the related digital trigger input are mapped to this pin. The ADC function has no effect on the output state. Refer to NOTE/2-172 for input buffer control. • 48/64/100 LQFP: Pin interrupts can be generated if enabled in digital input or output mode. • Signal priority: 48/64 LQFP: AMP1 > DACU1 > GPO 100 LQFP: AMP1 > GPO

Table 2-16. Port AD Pins AD15-8

PAD9	• 48/64 LQFP: The ACMPO signal of the analog comparator is mapped to this pin when used with the ACMP function. If the ACMP output is enabled (ACMPC[ACOPE]=1) the I/O state will be forced to output. • 48/64/100 LQFP: The ADC analog input channel signal AN9 and the related digital trigger input are mapped to this pin. The ADC function has no effect on the output state. Refer to NOTE/2-172 for input buffer control. • 48/64/100 LQFP: Pin interrupts can be generated if enabled in digital input or output mode. • Signal priority: 48 LQFP: ACMPO > GPO 64/100 LQFP: GPO
PAD8	• 48/64/100 LQFP: The ADC analog input channel signal AN8 and the related digital trigger input are mapped to this pin. The ADC function has no effect on the output state. Refer to NOTE/2-172 for input buffer control. • 48/64/100 LQFP: Pin interrupts can be generated if enabled in digital input or output mode. • Signal priority: 48/64/100 LQFP: GPO

1 AMP output takes precedence over DACU output on shared pin.

Table 2-17. Port AD Pins AD7-0

PAD7	• 32 LQFP: The inverting input signal ACMPM of the analog comparator is mapped to this pin when used with the ACMP function. The ACMP function has no effect on the output state. Refer to NOTE/2-172 for input buffer control. • Except 20 TSSOP: The ADC analog input channel signal AN7 and the related digital trigger input are mapped to this pin. The ADC function has no effect on the output state. Refer to NOTE/2-172 for input buffer control. • Except 20 TSSOP: Pin interrupts can be generated if enabled in digital input or output mode. • Signal priority: Except 20 TSSOP: GPO
PAD6	• 32 LQFP: The non-inverting input signal ACMPP of the analog comparator is mapped to this pin when used with the ACMP function. The ACMP function has no effect on the output state. Refer to NOTE/2-172 for input buffer control. • Except 20 TSSOP: The ADC analog input channel signal AN6 and the related digital trigger input are mapped to this pin. The ADC function has no effect on the output state. Refer to NOTE/2-172 for input buffer control. • Except 20 TSSOP: Pin interrupts can be generated if enabled in digital input or output mode. • Signal priority: Except 20 TSSOP: GPO

Table 2-17. Port AD Pins AD7-0 (continued)

PAD5	• 32 LQFP: The ACMPO signal of the analog comparator is mapped to this pin when used with the ACMP function. If the ACMP output is enabled (ACMPC[ACOPE]=1) the I/O state will be forced to output. • 20 TSSOP: The inverting input signal ACMPM of the analog comparator is mapped to this pin when used with the ACMP function. The ACMP function has no effect on the output state. Refer to NOTE/2-172 for input buffer control. • The ADC analog input channel signal AN5 and the related digital trigger input are mapped to this pin. The ADC function has no effect on the output state. Refer to NOTE/2-172 for input buffer control. • 20 TSSOP: The SCI0 TXD signal is mapped to this pin. If the SCI0 TXD signal is enabled the I/O state will depend on the SCI0 configuration. • 20 TSSOP: The TIM channel 3 signal is mapped to this pin. The TIM forces the I/O state to be an output for a timer port associated with an enabled output compare. • 20 TSSOP: The PWM channel 3 signal is mapped to this pin. If the PWM channel is enabled and routed here the I/O state is forced to output. • 20 TSSOP: The ADC ETRIG3 signal is mapped to this pin if PWM channel 3 is routed here. The enabled external trigger function has no effect on the I/O state. Refer to Section 2.6.4, “ADC External Triggers ETRIG3-0”. • Pin interrupts can be generated if enabled in digital input or output mode. • Signal priority: 32 LQFP: ACMPO > GPO 20 TSSOP: TXD0 > IOC3 > PWM3 > GPO Others: GPO
PAD4	• 20 TSSOP: The non-inverting input signal ACMPP of the analog comparator is mapped to this pin when used with the ACMP function. The ACMP function has no effect on the output state. Refer to NOTE/2-172 for input buffer control. • The ADC analog input channel signal AN4 and the related digital trigger input are mapped to this pin. The ADC function has no effect on the output state. Refer to NOTE/2-172 for input buffer control. • 20 TSSOP: The SCI0 RXD signal is mapped to this pin. If the SCI0 RXD signal is enabled and routed here the I/O state will be forced to input. • 20 TSSOP: The TIM channel 2 signal is mapped to this pin. The TIM forces the I/O state to be an output for a timer port associated with an enabled output compare. • 20 TSSOP: The PWM channel 2 signal is mapped to this pin. If the PWM channel is enabled and routed here the I/O state is forced to output. • 20 TSSOP: The ADC ETRIG2 signal is mapped to this pin if PWM channel 2 is routed here. The enabled external trigger function has no effect on the I/O state. Refer to Section 2.6.4, “ADC External Triggers ETRIG3-0”. • Pin interrupts can be generated if enabled in digital input or output mode. • Signal priority: 20 TSSOP: RXD0 > IOC2 > PWM2 > GPO Others: GPO

Table 2-17. Port AD Pins AD7-0 (continued)

PAD3	• 20 TSSOP: The ACMPO signal of the analog comparator is mapped to this pin when used with the ACMP function. If the ACMP output is enabled (ACMPC[ACOPE]=1) the I/O state will be forced to output. • The ADC analog input channel signal AN3 and the related digital trigger input are mapped to this pin. The ADC function has no effect on the output state. Refer to NOTE/2-172 for input buffer control. • Pin interrupts can be generated if enabled in digital input or output mode. • Signal priority: 20 TSSOP: ACMPO > GPO Others: GPO
PAD2-PAD0	• The ADC analog input channel signals AN2-0 and their related digital trigger inputs are mapped to this pin. The ADC function has no effect on the output state. Refer to NOTE/2-172 for input buffer control. • Pin interrupts can be generated if enabled in digital input or output mode. • Signal priority: GPO

2.4 PIM Ports - Memory Map and Register Definition

This section provides a detailed description of all PIM registers.

2.4.1 Memory Map

Table 2-18 shows the memory maps of all groups (for definitions see Table 2-2). Addresses 0x0000 to 0x0007 are only implemented in group G1 otherwise reserved.

Table 2-18. Block Memory Map (0x0000-0x027F)

Port	Global Address	Register	Access	Reset Value	Section/Page
(A) (B)	0x0000	PORTA—Port A Data Register[1]	R/W	0x00	2.4.3.1/2-197
	0x0001	PORTB—Port B Data Register[1]	R/W	0x00	2.4.3.2/2-197
	0x0002	DDRA—Port A Data Direction Register[1]	R/W	0x00	2.4.3.3/2-198
	0x0003	DDRB—Port B Data Direction Register[1]	R/W	0x00	2.4.3.4/2-199
(C) (D)	0x0004	PORTC—Port C Data Register[1]	R/W	0x00	2.4.3.5/2-199
	0x0005	PORTD—Port D Data Register[1]	R/W	0x00	2.4.3.6/2-200
	0x0006	DDRC—Port C Data Direction Register[1]	R/W	0x00	2.4.3.7/2-201
	0x0007	DDRD—Port D Data Direction Register[1]	R/W	0x00	2.4.3.8/2-201
E	0x0008	PORTE—Port E Data Register	R/W	0x00	
	0x0009	DDRE—Port E Data Direction Register	R/W	0x00	
	0x000A : 0x000B	Non-PIM address range[2]	-	-	-
(A) (B) (C) (D) E	0x000C	PUCR—Pull Control Register	R/W	0x50	2.4.3.11/2-203
	0x000D	Reserved	R	0x00	
	0x000E : 0x001B	Non-PIM address range[2]	-	-	-
	0x001C	ECLKCTL—ECLK Control Register	R/W	0xC0	2.4.3.12/2-205
	0x001D	Reserved	R	0x00	
	0x001E	IRQCR—IRQ Control Register	R/W	0x00	2.4.3.13/2-205
	0x001F	Reserved	R	0x00	
	0x0020 : 0x023F	Non-PIM address range[2]	-	-	-

Table 2-18. Block Memory Map (0x0000-0x027F) (continued)

Port	Global Address	Register	Access	Reset Value	Section/Page
T	0x0240	PTT—Port T Data Register	R/W	0x00	2.4.3.15/2-207
	0x0241	PTIT—Port T Input Register	R	[3]	2.4.3.16/2-207
	0x0242	DDRT—Port T Data Direction Register	R/W	0x00	2.4.3.17/2-208
	0x0243	Reserved	R	0x00	
	0x0244	PERT—Port T Pull Device Enable Register	R/W	0x00	2.4.3.18/2-209
	0x0245	PPST—Port T Polarity Select Register	R/W	0x00	2.4.3.19/2-210
	0x0246	Reserved	R	0x00	
	0x0247	Reserved	R	0x00	
S	0x0248	PTS—Port S Data Register	R/W	0x00	2.4.3.20/2-210
	0x0249	PTIS—Port S Input Register	R	[3]	2.4.3.21/2-211
	0x024A	DDRS—Port S Data Direction Register	R/W	0x00	2.4.3.22/2-211
	0x024B	Reserved	R	0x00	
	0x024C	PERS—Port S Pull Device Enable Register	R/W	0xFF	2.4.3.23/2-212
	0x024D	PPSS—Port S Polarity Select Register	R/W	0x00	2.4.3.24/2-212
	0x024E	WOMS—Port S Wired-Or Mode Register	R/W	0x00	2.4.3.25/2-213
	0x024F	PRR0—Pin Routing Register 0[4]	R/W	0x00	2.4.3.26/2-213
M	0x0250	PTM—Port M Data Register	R/W	0x00	2.4.3.27/2-215
	0x0251	PTIM—Port M Input Register	R	[3]	2.4.3.29/2-216
	0x0252	DDRM—Port M Data Direction Register	R/W	0x00	2.4.3.29/2-216
	0x0253	Reserved	R	0x00	
	0x0254	PERM—Port M Pull Device Enable Register	R/W	0x00	2.4.3.30/2-217
	0x0255	PPSM—Port M Polarity Select Register	R/W	0x00	2.4.3.31/2-218
	0x0256	WOMM—Port M Wired-Or Mode Register	R/W	0x00	2.4.3.32/2-218
	0x0257	PKGCR—Package Code Register	R/W	[5]	2.4.3.33/2-219
P	0x0258	PTP—Port P Data Register	R/W	0x00	2.4.3.34/2-220
	0x0259	PTIP—Port P Input Register	R	[3]	2.4.3.35/2-221
	0x025A	DDRP—Port P Data Direction Register	R/W	0x00	2.4.3.36/2-222
	0x025B	Reserved	R	0x00	
	0x025C	PERP—Port P Pull Device Enable Register	R/W	0x00	2.4.3.37/2-222
	0x025D	PPSP—Port P Polarity Select Register	R/W	0x00	2.4.3.38/2-223
	0x025E	PIEP—Port P Interrupt Enable Register	R/W	0x00	2.4.3.39/2-224
	0x025F	PIFP—Port P Interrupt Flag Register	R/W	0x00	2.4.3.40/2-224

Table 2-18. Block Memory Map (0x0000-0x027F) (continued)

Port	Global Address	Register	Access	Reset Value	Section/Page
	0x0260	Reserved for ACMP available in group G2 and G3	R(/W)	0x00	(ACMP)
	0x0261		R(/W)	0x00	(ACMP)
	0x0262 : 0x0266	Reserved	R	0x00	
J	0x0268	PTJ—Port J Data Register	R/W	0x00	2.4.3.42/2-226
	0x0269	PTIJ—Port J Input Register	R	[3]	2.4.3.43/2-227
	0x026A	DDRJ—Port J Data Direction Register	R/W	0x00	2.4.3.44/2-227
	0x026B	Reserved	R	0x00	
	0x026C	PERJ—Port J Pull Device Enable Register	R/W	0xFF (G1,G2) 0x0F (G3)	2.4.3.45/2-228
	0x026D	PPSJ—Port J Polarity Select Register	R/W	0x00	2.4.3.46/2-229
	0x026E	PIEJ—Port J Interrupt Enable Register	R/W	0x00	2.4.3.47/2-229
	0x026F	PIFJ—Port J Interrupt Flag Register	R/W	0x00	2.4.3.48/2-230
AD	0x0270	PT0AD—Port AD Data Register	R/W	0x00	2.4.3.49/2-231
	0x0271	PT1AD—Port AD Data Register	R/W	0x00	2.4.3.50/2-231
	0x0272	PTI0AD—Port AD Input Register	R	[3]	2.4.3.51/2-232
	0x0273	PTI1AD—Port AD Input Register	R	[3]	2.4.3.54/2-233
	0x0274	DDR0AD—Port AD Data Direction Register	R/W	0x00	2.4.3.53/2-233
	0x0275	DDR1AD—Port AD Data Direction Register	R/W	0x00	2.4.3.54/2-233
	0x0276	Reserved for RVACTL on G(A)240 and G(A)192 only	R(/W)	0x00	(RVA)
	0x0277	PRR1—Pin Routing Register 1[6]	R/W	0x00	2.4.3.56/2-234
	0x0278	PER0AD—Port AD Pull Device Enable Register	R/W	0x00	2.4.3.57/2-235
	0x0279	PER1AD—Port AD Pull Device Enable Register	R/W	0x00	2.4.3.58/2-236
	0x027A	PPS0AD—Port AD Polarity Select Register	R/W	0x00	2.4.3.59/2-236
	0x027B	PPS1AD—Port AD Polarity Select Register	R/W	0x00	2.4.3.60/2-237
	0x027C	PIE0AD—Port AD Interrupt Enable Register	R/W	0x00	2.4.3.61/2-238
	0x027D	PIE1AD—Port AD Interrupt Enable Register	R/W	0x00	2.4.3.62/2-238
	0x027E	PIF0AD—Port AD Interrupt Flag Register	R/W	0x00	2.4.3.63/2-239
	0x027F	PIF1AD—Port AD Interrupt Flag Register	R/W	0x00	2.4.3.64/2-240

1 Available in group G1 only. In any other case this address is reserved.

2 Refer to device memory map to determine related module.

3 Read always returns logic level on pins.

4 Routing takes only effect if the PKGCR is set to 20 TSSOP.

[5] Preset by factory.

[6] Routing register only available on G(A)240 and G(A)192 only. Takes only effect if the PKGCR is set to 100 LQFP.

2.4.2 Register Map

The following tables show the individual register maps of groups G1 (Table 2-19), G2 (Table 2-20) and G3 (Table 2-21).

NOTE

To maintain SW compatibility write data to unimplemented register bits must be zero.

2.4.2.1 Block Register Map (G1)

Table 2-19. Block Register Map (G1)

Global Address Register Name		Bit 7	6	5	4	3	2	1	Bit 0
0x0000 PORTA	R	PA7	PA6	PA5	PA4	PA3	PA2	PA1	PA0
	W								
0x0001 PORTB	R	PB7	PB6	PB5	PB4	PB3	PB2	PB1	PB0
	W								
0x0002 DDRA	R	DDRA7	DDRA6	DDRA5	DDRA4	DDRA3	DDRA2	DDRA1	DDRA0
	W								
0x0003 DDRB	R	DDRB7	DDRB6	DDRB5	DDRB4	DDRB3	DDRB2	DDRB1	DDRB0
	W								
0x0004 PORTC	R	PC7	PC6	PC5	PC4	PC3	PC2	PC1	PC0
	W								
0x0005 PORTD	R	PD7	PD6	PD5	PD4	PD3	PD2	PD1	PD0
	W								
0x0006 DDRC	R	DDRC7	DDRC6	DDRC5	DDRC4	DDRC3	DDRC2	DDRC1	DDRC0
	W								
0x0007 DDRD	R	DDRD7	DDRD6	DDRD5	DDRD4	DDRD3	DDRD2	DDRD1	DDRD0
	W								
0x0008 PORTE	R	0	0	0	0	0	0	PE1	PE0
	W								
0x0009 DDRE	R	0	0	0	0	0	0	DDRE1	DDRE0
	W								

= Unimplemented or Reserved

Table 2-19. Block Register Map (G1) (continued)

Global Address Register Name		Bit 7	6	5	4	3	2	1	Bit 0
0x000A–0x000B Non-PIM Address Range	R	Non-PIM Address Range							
	W								
0x000C PUCR	R	0	BKPUE	0	PDPEE	PUPDE	PUPCE	PUPBE	PUPAE
	W								
0x000D Reserved	R	0	0	0	0	0	0	0	0
	W								
0x000E–0x001B Non-PIM Address Range	R	Non-PIM Address Range							
	W								
0x001C ECLKCTL	R	NECLK	NCLKX2	DIV16	EDIV4	EDIV3	EDIV2	EDIV1	EDIV0
	W								
0x001D Reserved	R	0	0	0	0	0	0	0	0
	W								
0x001E IRQCR	R	IRQE	IRQEN	0	0	0	0	0	0
	W								
0x001F Reserved	R	Reserved	Reserved	Reserved	Reserved	Reserved	Reserved	Reserved	Reserved
	W								
0x0020–0x023F Non-PIM Address Range	R	Non-PIM Address Range							
	W								
0x0240 PTT	R	PTT7	PTT6	PTT5	PTT4	PTT3	PTT2	PTT1	PTT0
	W								
0x0241 PTIT	R	PTIT7	PTIT6	PTIT5	PTIT4	PTIT3	PTIT2	PTIT1	PTIT0
	W								
0x0242 DDRT	R	DDRT7	DDRT6	DDRT5	DDRT4	DDRT3	DDRT2	DDRT1	DDRT0
	W								
0x0243 Reserved	R	0	0	0	0	0	0	0	0
	W								
0x0244 PERT	R	PERT7	PERT6	PERT5	PERT4	PERT3	PERT2	PERT1	PERT0
	W								
0x0245 PPST	R	PPST7	PPST6	PPST5	PPST4	PPST3	PPST2	PPST1	PPST0
	W								

= Unimplemented or Reserved

Table 2-19. Block Register Map (G1) (continued)

Global Address Register Name		Bit 7	6	5	4	3	2	1	Bit 0
0x0246 Reserved	R	0	0	0	0	0	0	0	0
	W								
0x0247 Reserved	R	0	0	0	0	0	0	0	0
	W								
0x0248 PTS	R	PTS7	PTS6	PTS5	PTS4	PTS3	PTS2	PTS1	PTS0
	W								
0x0249 PTIS	R	PTIS7	PTIS6	PTIS5	PTIS4	PTIS3	PTIS2	PTIS1	PTIS0
	W								
0x024A DDRS	R	DDRS7	DDRS6	DDRS5	DDRS4	DDRS3	DDRS2	DDRS1	DDRS0
	W								
0x024B Reserved	R	0	0	0	0	0	0	0	0
	W								
0x024C PERS	R	PERS7	PERS6	PERS5	PERS4	PERS3	PERS2	PERS1	PERS0
	W								
0x024D PPSS	R	PPSS7	PPSS6	PPSS5	PPSS4	PPSS3	PPSS2	PPSS1	PPSS0
	W								
0x024E WOMS	R	WOMS7	WOMS6	WOMS5	WOMS4	WOMS3	WOMS2	WOMS1	WOMS0
	W								
0x024F PRR0	R	PRR0P3	PRR0P2	PRR0T31	PRR0T30	PRR0T21	PRR0T20	PRR0S1	PRR0S0
	W								
0x0250 PTM	R	0	0	0	0	PTM3	PTM2	PTM1	PTM0
	W								
0x0251 PTIM	R	0	0	0	0	PTIM3	PTIM2	PTIM1	PTIM0
	W								
0x0252 DDRM	R	0	0	0	0	DDRM3	DDRM2	DDRM1	DDRM0
	W								
0x0253 Reserved	R	0	0	0	0	0	0	0	0
	W								
0x0254 PERM	R	0	0	0	0	PERM3	PERM2	PERM1	PERM0
	W								

= Unimplemented or Reserved

Table 2-19. Block Register Map (G1) (continued)

Global Address Register Name		Bit 7	6	5	4	3	2	1	Bit 0
0x0255 PPSM	R	0	0	0	0	PPSM3	PPSM2	PPSM1	PPSM0
	W								
0x0256 WOMM	R	0	0	0	0	WOMM3	WOMM2	WOMM1	WOMM0
	W								
0x0257 PKGCR	R	APICLKS7	0	0	0	0	PKGCR2	PKGCR1	PKGCR0
	W								
0x0258 PTP	R	PTP7	PTP6	PTP5	PTP4	PTP3	PTP2	PTP1	PTP0
	W								
0x0259 PTIP	R	PTIP7	PTIP6	PTIP5	PTIP4	PTIP3	PTIP2	PTIP1	PTIP0
	W								
0x025A DDRP	R	DDRP7	DDRP6	DDRP5	DDRP4	DDRP3	DDRP2	DDRP1	DDRP0
	W								
0x025B Reserved	R	0	0	0	0	0	0	0	0
	W								
0x025C PERP	R	PERP7	PERP6	PERP5	PERP4	PERP3	PERP2	PERP1	PERP0
	W								
0x025D PPSP	R	PPSP7	PPSP6	PPSP5	PPSP4	PPSP3	PPSP2	PPSP1	PPSP0
	W								
0x025E PIEP	R	PIEP7	PIEP6	PIEP5	PIEP4	PIEP3	PIEP2	PIEP1	PIEP0
	W								
0x025F PIFP	R	PIFP7	PIFP6	PIFP5	PIFP4	PIFP3	PIFP2	PIFP1	PIFP0
	W								
0x0260–0x0267 Reserved	R	0	0	0	0	0	0	0	0
	W								
0x0268 PTJ	R	PTJ7	PTJ6	PTJ5	PTJ4	PTJ3	PTJ2	PTJ1	PTJ0
	W								
0x0269 PTIJ	R	PTIJ7	PTIJ6	PTIJ5	PTIJ4	PTIJ3	PTIJ2	PTIJ1	PTIJ0
	W								
0x026A DDRJ	R	DDRJ7	DDRJ6	DDRJ5	DDRJ4	DDRJ3	DDRJ2	DDRJ1	DDRJ0
	W								

= Unimplemented or Reserved

Table 2-19. Block Register Map (G1) (continued)

Global Address Register Name		Bit 7	6	5	4	3	2	1	Bit 0
0x026B Reserved	R	0	0	0	0	0	0	0	0
	W								
0x026C PERJ	R	PERJ7	PERJ6	PERJ5	PERJ4	PERJ3	PERJ2	PERJ1	PERJ0
	W								
0x026D PPSJ	R	PPSJ7	PPSJ6	PPSJ5	PPSJ4	PPSJ3	PPSJ2	PPSJ1	PPSJ0
	W								
0x026E PIEJ	R	PIEJ7	PIEJ6	PIEJ5	PIEJ4	PIEJ3	PIEJ2	PIEJ1	PIEJ0
	W								
0x026F PIFJ	R	PIFJ7	PIFJ6	PIFJ5	PIFJ4	PIFJ3	PIFJ2	PIFJ1	PIFJ0
	W								
0x0270 PT0AD	R	PT0AD7	PT0AD6	PT0AD5	PT0AD4	PT0AD3	PT0AD2	PT0AD1	PT0AD0
	W								
0x0271 PT1AD	R	PT1AD7	PT1AD6	PT1AD5	PT1AD4	PT1AD3	PT1AD2	PT1AD1	PT1AD0
	W								
0x0272 PTI0AD	R	PTI0AD7	PTI0AD6	PTI0AD5	PTI0AD4	PTI0AD3	PTI0AD2	PTI0AD1	PTI0AD0
	W								
0x0273 PTI1AD	R	PTI1AD7	PTI1AD6	PTI1AD5	PTI1AD4	PTI1AD3	PTI1AD2	PTI1AD1	PTI1AD0
	W								
0x0274 DDR0AD	R	DDR0AD7	DDR0AD6	DDR0AD5	DDR0AD4	DDR0AD3	DDR0AD2	DDR0AD1	DDR0AD0
	W								
0x0275 DDR1AD	R	DDR1AD7	DDR1AD6	DDR1AD5	DDR1AD4	DDR1AD3	DDR1AD2	DDR1AD1	DDR1AD0
	W								
0x0276 Reserved	R	Reserved for RVACTL on G(A)240 and G(A)192							
	W								
0x0277 PRR1	R	0	0	0	0	0	0	0	PRR1AN
	W								
0x0278 PER0AD	R	PER0AD7	PER0AD6	PER0AD5	PER0AD4	PER0AD3	PER0AD2	PER0AD1	PER0AD0
	W								
0x0279 PER1AD	R	PER1AD7	PER1AD6	PER1AD5	PER1AD4	PER1AD3	PER1AD2	PER1AD1	PER1AD0
	W								

= Unimplemented or Reserved

Table 2-19. Block Register Map (G1) (continued)

Global Address Register Name		Bit 7	6	5	4	3	2	1	Bit 0
0x027A PPS0AD	R	PPS0AD7	PPS0AD6	PPS0AD5	PPS0AD4	PPS0AD3	PPS0AD2	PPS0AD1	PPS0AD0
	W								
0x027B PPS1AD	R	PPS1AD7	PPS1AD6	PPS1AD5	PPS1AD4	PPS1AD3	PPS1AD2	PPS1AD1	PPS1AD0
	W								
0x027C PIE0AD	R	PIE0AD7	PIE0AD6	PIE0AD5	PIE0AD4	PIE0AD3	PIE0AD2	PIE0AD1	PIE0AD0
	W								
0x027D PIE1AD	R	PIE1AD7	PIE1AD6	PIE1AD5	PIE1AD4	PIE1AD3	PIE1AD2	PIE1AD1	PIE1AD0
	W								
0x027E PIF0AD	R	PIF0AD7	PIF0AD6	PIF0AD5	PIF0AD4	PIF0AD3	PIF0AD2	PIF0AD1	PIF0AD0
	W								
0x027F PIF1AD	R	PIF1AD7	PIF1AD6	PIF1AD5	PIF1AD4	PIF1AD3	PIF1AD2	PIF1AD1	PIF1AD0
	W								

= Unimplemented or Reserved

2.4.2.2 Block Register Map (G2)

Table 2-20. Block Register Map (G2)

Global Address Register Name		Bit 7	6	5	4	3	2	1	Bit 0
0x0000–0x0007 Reserved	R	0	0	0	0	0	0	0	0
	W								
0x0008 PORTE	R	0	0	0	0	0	0	PE1	PE0
	W								
0x0009 DDRE	R	0	0	0	0	0	0	DDRE1	DDRE0
	W								
0x000A–0x000B Non-PIM Address Range	R	Non-PIM Address Range							
	W								
0x000C PUCR	R	0	BKPUE	0	PDPEE	0	0	0	0
	W								
0x000D Reserved	R	0	0	0	0	0	0	0	0
	W								

= Unimplemented or Reserved

Table 2-20. Block Register Map (G2) (continued)

Global Address Register Name		Bit 7	6	5	4	3	2	1	Bit 0
0x000E–0x001B Non-PIM Address Range	R	Non-PIM Address Range							
	W								
0x001C ECLKCTL	R	NECLK	NCLKX2	DIV16	EDIV4	EDIV3	EDIV2	EDIV1	EDIV0
	W								
0x001D Reserved	R	0	0	0	0	0	0	0	0
	W								
0x001E IRQCR	R	IRQE	IRQEN	0	0	0	0	0	0
	W								
0x001F Reserved	R	Reserved	Reserved	Reserved	Reserved	Reserved	Reserved	Reserved	Reserved
	W								
0x0020–0x023F Non-PIM Address Range	R	Non-PIM Address Range							
	W								
0x0240 PTT	R	PTT7	PTT6	PTT5	PTT4	PTT3	PTT2	PTT1	PTT0
	W								
0x0241 PTIT	R	PTIT7	PTIT6	PTIT5	PTIT4	PTIT3	PTIT2	PTIT1	PTIT0
	W								
0x0242 DDRT	R	DDRT7	DDRT6	DDRT5	DDRT4	DDRT3	DDRT2	DDRT1	DDRT0
	W								
0x0243 Reserved	R	0	0	0	0	0	0	0	0
	W								
0x0244 PERT	R	PERT7	PERT6	PERT5	PERT4	PERT3	PERT2	PERT1	PERT0
	W								
0x0245 PPST	R	PPST7	PPST6	PPST5	PPST4	PPST3	PPST2	PPST1	PPST0
	W								
0x0246 Reserved	R	0	0	0	0	0	0	0	0
	W								
0x0247 Reserved	R	0	0	0	0	0	0	0	0
	W								
0x0248 PTS	R	PTS7	PTS6	PTS5	PTS4	PTS3	PTS2	PTS1	PTS0
	W								

= Unimplemented or Reserved

Table 2-20. Block Register Map (G2) (continued)

Global Address Register Name		Bit 7	6	5	4	3	2	1	Bit 0
0x0249 PTIS	R	PTIS7	PTIS6	PTIS5	PTIS4	PTIS3	PTIS2	PTIS1	PTIS0
	W								
0x024A DDRS	R	DDRS7	DDRS6	DDRS5	DDRS4	DDRS3	DDRS2	DDRS1	DDRS0
	W								
0x024B Reserved	R	0	0	0	0	0	0	0	0
	W								
0x024C PERS	R	PERS7	PERS6	PERS5	PERS4	PERS3	PERS2	PERS1	PERS0
	W								
0x024D PPSS	R	PPSS7	PPSS6	PPSS5	PPSS4	PPSS3	PPSS2	PPSS1	PPSS0
	W								
0x024E WOMS	R	WOMS7	WOMS6	WOMS5	WOMS4	WOMS3	WOMS2	WOMS1	WOMS0
	W								
0x024F PRR0	R	PRR0P3	PRR0P2	PRR0T31	PRR0T30	PRR0T21	PRR0T20	PRR0S1	PRR0S0
	W								
0x0250 PTM	R	0	0	0	0	PTM3	PTM2	PTM1	PTM0
	W								
0x0251 PTIM	R	0	0	0	0	PTIM3	PTIM2	PTIM1	PTIM0
	W								
0x0252 DDRM	R	0	0	0	0	DDRM3	DDRM2	DDRM1	DDRM0
	W								
0x0253 Reserved	R	0	0	0	0	0	0	0	0
	W								
0x0254 PERM	R	0	0	0	0	PERM3	PERM2	PERM1	PERM0
	W								
0x0255 PPSM	R	0	0	0	0	PPSM3	PPSM2	PPSM1	PPSM0
	W								
0x0256 WOMM	R	0	0	0	0	WOMM3	WOMM2	WOMM1	WOMM0
	W								
0x0257 PKGCR	R	APICLKS7	0	0	0	0	PKGCR2	PKGCR1	PKGCR0
	W								

= Unimplemented or Reserved

Table 2-20. Block Register Map (G2) (continued)

Global Address Register Name		Bit 7	6	5	4	3	2	1	Bit 0
0x0258 PTP	R	PTP7	PTP6	PTP5	PTP4	PTP3	PTP2	PTP1	PTP0
	W								
0x0259 PTIP	R	PTIP7	PTIP6	PTIP5	PTIP4	PTIP3	PTIP2	PTIP1	PTIP0
	W								
0x025A DDRP	R	DDRP7	DDRP6	DDRP5	DDRP4	DDRP3	DDRP2	DDRP1	DDRP0
	W								
0x025B Reserved	R	0	0	0	0	0	0	0	0
	W								
0x025C PERP	R	PERP7	PERP6	PERP5	PERP4	PERP3	PERP2	PERP1	PERP0
	W								
0x025D PPSP	R	PPSP7	PPSP6	PPSP5	PPSP4	PPSP3	PPSP2	PPSP1	PPSP0
	W								
0x025E PIEP	R	PIEP7	PIEP6	PIEP5	PIEP4	PIEP3	PIEP2	PIEP1	PIEP0
	W								
0x025F PIFP	R	PIFP7	PIFP6	PIFP5	PIFP4	PIFP3	PIFP2	PIFP1	PIFP0
	W								
0x0260–0x0261 Reserved	R	Reserved for ACMP							
	W								
0x0262–0x0266 Reserved	R	0	0	0	0	0	0	0	0
	W								
0x0267 Reserved	R	Reserved	Reserved	0	0	0	0	0	Reserved
	W								
0x0268 PTJ	R	PTJ7	PTJ6	PTJ5	PTJ4	PTJ3	PTJ2	PTJ1	PTJ0
	W								
0x0269 PTIJ	R	PTIJ7	PTIJ6	PTIJ5	PTIJ4	PTIJ3	PTIJ2	PTIJ1	PTIJ0
	W								
0x026A DDRJ	R	DDRJ7	DDRJ6	DDRJ5	DDRJ4	DDRJ3	DDRJ2	DDRJ1	DDRJ0
	W								
0x026B Reserved	R	0	0	0	0	0	0	0	0
	W								

= Unimplemented or Reserved

Table 2-20. Block Register Map (G2) (continued)

Global Address Register Name		Bit 7	6	5	4	3	2	1	Bit 0
0x026C PERJ	R	PERJ7	PERJ6	PERJ5	PERJ4	PERJ3	PERJ2	PERJ1	PERJ0
	W								
0x026D PPSJ	R	PPSJ7	PPSJ6	PPSJ5	PPSJ4	PPSJ3	PPSJ2	PPSJ1	PPSJ0
	W								
0x026E PIEJ	R	PIEJ7	PIEJ6	PIEJ5	PIEJ4	PIEJ3	PIEJ2	PIEJ1	PIEJ0
	W								
0x026F PIFJ	R	PIFJ7	PIFJ6	PIFJ5	PIFJ4	PIFJ3	PIFJ2	PIFJ1	PIFJ0
	W								
0x0270 PT0AD	R	PT0AD7	PT0AD6	PT0AD5	PT0AD4	PT0AD3	PT0AD2	PT0AD1	PT0AD0
	W								
0x0271 PT1AD	R	PT1AD7	PT1AD6	PT1AD5	PT1AD4	PT1AD3	PT1AD2	PT1AD1	PT1AD0
	W								
0x0272 PTI0AD	R	PTI0AD7	PTI0AD6	PTI0AD5	PTI0AD4	PTI0AD3	PTI0AD2	PTI0AD1	PTI0AD0
	W								
0x0273 PTI1AD	R	PTI1AD7	PTI1AD6	PTI1AD5	PTI1AD4	PTI1AD3	PTI1AD2	PTI1AD1	PTI1AD0
	W								
0x0274 DDR0AD	R	DDR0AD7	DDR0AD6	DDR0AD5	DDR0AD4	DDR0AD3	DDR0AD2	DDR0AD1	DDR0AD0
	W								
0x0275 DDR1AD	R	DDR1AD7	DDR1AD6	DDR1AD5	DDR1AD4	DDR1AD3	DDR1AD2	DDR1AD1	DDR1AD0
	W								
0x0276 Reserved	R	0	0	0	0	0	0	0	0
	W								
0x0277 Reserved	R	0	0	0	0	0	0	0	0
	W								
0x0278 PER0AD	R	PER0AD7	PER0AD6	PER0AD5	PER0AD4	PER0AD3	PER0AD2	PER0AD1	PER0AD0
	W								
0x0279 PER1AD	R	PER1AD7	PER1AD6	PER1AD5	PER1AD4	PER1AD3	PER1AD2	PER1AD1	PER1AD0
	W								
0x027A PPS0AD	R	PPS0AD7	PPS0AD6	PPS0AD5	PPS0AD4	PPS0AD3	PPS0AD2	PPS0AD1	PPS0AD0
	W								

= Unimplemented or Reserved

Table 2-20. Block Register Map (G2) (continued)

Global Address Register Name		Bit 7	6	5	4	3	2	1	Bit 0
0x027B PPS1AD	R	PPS1AD7	PPS1AD6	PPS1AD5	PPS1AD4	PPS1AD3	PPS1AD2	PPS1AD1	PPS1AD0
	W								
0x027C PIE0AD	R	PIE0AD7	PIE0AD6	PIE0AD5	PIE0AD4	PIE0AD3	PIE0AD2	PIE0AD1	PIE0AD0
	W								
0x027D PIE1AD	R	PIE1AD7	PIE1AD6	PIE1AD5	PIE1AD4	PIE1AD3	PIE1AD2	PIE1AD1	PIE1AD0
	W								
0x027E PIF0AD	R	PIF0AD7	PIF0AD6	PIF0AD5	PIF0AD4	PIF0AD3	PIF0AD2	PIF0AD1	PIF0AD0
	W								
0x027F PIF1AD	R	PIF1AD7	PIF1AD6	PIF1AD5	PIF1AD4	PIF1AD3	PIF1AD2	PIF1AD1	PIF1AD0
	W								

= Unimplemented or Reserved

2.4.2.3 Block Register Map (G3)

Table 2-21. Block Register Map (G3)

Global Address Register Name		Bit 7	6	5	4	3	2	1	Bit 0
0x0000–0x0007 Reserved	R	0	0	0	0	0	0	0	0
	W								
0x0008 PORTE	R	0	0	0	0	0	0	PE1	PE0
	W								
0x0009 DDRE	R	0	0	0	0	0	0	DDRE1	DDRE0
	W								
0x000A–0x000B Non-PIM Address Range	R	Non-PIM Address Range							
	W								
0x000C PUCR	R	0	BKPUE	0	PDPEE	0	0	0	0
	W								
0x000D Reserved	R	0	0	0	0	0	0	0	0
	W								

= Unimplemented or Reserved

Table 2-21. Block Register Map (G3) (continued)

Global Address Register Name		Bit 7	6	5	4	3	2	1	Bit 0
0x000E–0x001B Non-PIM Address Range	R W	Non-PIM Address Range							
0x001C ECLKCTL	R	NECLK	NCLKX2	DIV16	EDIV4	EDIV3	EDIV2	EDIV1	EDIV0
	W								
0x001D Reserved	R	0	0	0	0	0	0	0	0
	W								
0x001E IRQCR	R	IRQE	IRQEN	0	0	0	0	0	0
	W								
0x001F Reserved	R	Reserved	Reserved	Reserved	Reserved	Reserved	Reserved	Reserved	Reserved
	W								
0x0020–0x023F Non-PIM Address Range	R W	Non-PIM Address Range							
0x0240 PTT	R	0	0	PTT5	PTT4	PTT3	PTT2	PTT1	PTT0
	W								
0x0241 PTIT	R	0	0	PTIT5	PTIT4	PTIT3	PTIT2	PTIT1	PTIT0
	W								
0x0242 DDRT	R	0	0	DDRT5	DDRT4	DDRT3	DDRT2	DDRT1	DDRT0
	W								
0x0243 Reserved	R	0	0	0	0	0	0	0	0
	W								
0x0244 PERT	R	0	0	PERT5	PERT4	PERT3	PERT2	PERT1	PERT0
	W								
0x0245 PPST	R	0	0	PPST5	PPST4	PPST3	PPST2	PPST1	PPST0
	W								
0x0246 Reserved	R	0	0	0	0	0	0	0	0
	W								
0x0247 Reserved	R	0	0	0	0	0	0	0	0
	W								
0x0248 PTS	R	PTS7	PTS6	PTS5	PTS4	PTS3	PTS2	PTS1	PTS0
	W								

= Unimplemented or Reserved

Table 2-21. Block Register Map (G3) (continued)

Global Address Register Name		Bit 7	6	5	4	3	2	1	Bit 0
0x0249 PTIS	R	PTIS7	PTIS6	PTIS5	PTIS4	PTIS3	PTIS2	PTIS1	PTIS0
	W								
0x024A DDRS	R	DDRS7	DDRS6	DDRS5	DDRS4	DDRS3	DDRS2	DDRS1	DDRS0
	W								
0x024B Reserved	R	0	0	0	0	0	0	0	0
	W								
0x024C PERS	R	PERS7	PERS6	PERS5	PERS4	PERS3	PERS2	PERS1	PERS0
	W								
0x024D PPSS	R	PPSS7	PPSS6	PPSS5	PPSS4	PPSS3	PPSS2	PPSS1	PPSS0
	W								
0x024E WOMS	R	WOMS7	WOMS6	WOMS5	WOMS4	WOMS3	WOMS2	WOMS1	WOMS0
	W								
0x024F PRR0	R	PRR0P3	PRR0P2	PRR0T31	PRR0T30	PRR0T21	PRR0T20	PRR0S1	PRR0S0
	W								
0x0250 PTM	R	0	0	0	0	0	0	PTM1	PTM0
	W								
0x0251 PTIM	R	0	0	0	0	0	0	PTIM1	PTIM0
	W								
0x0252 DDRM	R	0	0	0	0	0	0	DDRM1	DDRM0
	W								
0x0253 Reserved	R	0	0	0	0	0	0	0	0
	W								
0x0254 PERM	R	0	0	0	0	0	0	PERM1	PERM0
	W								
0x0255 PPSM	R	0	0	0	0	0	0	PPSM1	PPSM0
	W								
0x0256 WOMM	R	0	0	0	0	0	0	WOMM1	WOMM0
	W								
0x0257 PKGCR	R	APICLKS7	0	0	0	0	PKGCR2	PKGCR1	PKGCR0
	W								

= Unimplemented or Reserved

Table 2-21. Block Register Map (G3) (continued)

Global Address Register Name		Bit 7	6	5	4	3	2	1	Bit 0
0x0258 PTP	R	0	0	PTP5	PTP4	PTP3	PTP2	PTP1	PTP0
	W								
0x0259 PTIP	R	0	0	PTIP5	PTIP4	PTIP3	PTIP2	PTIP1	PTIP0
	W								
0x025A DDRP	R	0	0	DDRP5	DDRP4	DDRP3	DDRP2	DDRP1	DDRP0
	W								
0x025B Reserved	R	0	0	0	0	0	0	0	0
	W								
0x025C PERP	R	0	0	PERP5	PERP4	PERP3	PERP2	PERP1	PERP0
	W								
0x025D PPSP	R	0	0	PPSP5	PPSP4	PPSP3	PPSP2	PPSP1	PPSP0
	W								
0x025E PIEP	R	0	0	PIEP5	PIEP4	PIEP3	PIEP2	PIEP1	PIEP0
	W								
0x025F PIFP	R	0	0	PIFP5	PIFP4	PIFP3	PIFP2	PIFP1	PIFP0
	W								
0x0260–0x0261 Reserved	R	Reserved for ACMP							
	W								
0x0262–0x0267 Reserved	R	0	0	0	0	0	0	0	0
	W								
0x0268 PTJ	R	0	0	0	0	PTJ3	PTJ2	PTJ1	PTJ0
	W								
0x0269 PTIJ	R	0	0	0	0	PTIJ3	PTIJ2	PTIJ1	PTIJ0
	W								
0x026A DDRJ	R	0	0	0	0	DDRJ3	DDRJ2	DDRJ1	DDRJ0
	W								
0x026B Reserved	R	0	0	0	0	0	0	0	0
	W								
0x026C PERJ	R	0	0	0	0	PERJ3	PERJ2	PERJ1	PERJ0
	W								

= Unimplemented or Reserved

Table 2-21. Block Register Map (G3) (continued)

Global Address Register Name		Bit 7	6	5	4	3	2	1	Bit 0
0x026D PPSJ	R	0	0	0	0	PPSJ3	PPSJ2	PPSJ1	PPSJ0
	W								
0x026E PIEJ	R	0	0	0	0	PIEJ3	PIEJ2	PIEJ1	PIEJ0
	W								
0x026F PIFJ	R	0	0	0	0	PIFJ3	PIFJ2	PIFJ1	PIFJ0
	W								
0x0270 PT0AD	R	0	0	0	0	PT0AD3	PT0AD2	PT0AD1	PT0AD0
	W								
0x0271 PT1AD	R	PT1AD7	PT1AD6	PT1AD5	PT1AD4	PT1AD3	PT1AD2	PT1AD1	PT1AD0
	W								
0x0272 PTI0AD	R	0	0	0	0	PTI0AD3	PTI0AD2	PTI0AD1	PTI0AD0
	W								
0x0273 PTI1AD	R	PTI1AD7	PTI1AD6	PTI1AD5	PTI1AD4	PTI1AD3	PTI1AD2	PTI1AD1	PTI1AD0
	W								
0x0274 DDR0AD	R	0	0	0	0	DDR0AD3	DDR0AD2	DDR0AD1	DDR0AD0
	W								
0x0275 DDR1AD	R	DDR1AD7	DDR1AD6	DDR1AD5	DDR1AD4	DDR1AD3	DDR1AD2	DDR1AD1	DDR1AD0
	W								
0x0276 Reserved	R	0	0	0	0	0	0	0	0
	W								
0x0277 Reserved	R	0	0	0	0	0	0	0	0
	W								
0x0278 PER0AD	R	0	0	0	0	PER0AD3	PER0AD2	PER0AD1	PER0AD0
	W								
0x0279 PER1AD	R	PER1AD7	PER1AD6	PER1AD5	PER1AD4	PER1AD3	PER1AD2	PER1AD1	PER1AD0
	W								
0x027A PPS0AD	R	0	0	0	0	PPS0AD3	PPS0AD2	PPS0AD1	PPS0AD0
	W								
0x027B PPS1AD	R	PPS1AD7	PPS1AD6	PPS1AD5	PPS1AD4	PPS1AD3	PPS1AD2	PPS1AD1	PPS1AD0
	W								

= Unimplemented or Reserved

Table 2-21. Block Register Map (G3) (continued)

Global Address Register Name		Bit 7	6	5	4	3	2	1	Bit 0
0x027C PIE0AD	R	0	0	0	0	PIE0AD3	PIE0AD2	PIE0AD1	PIE0AD0
	W								
0x027D PIE1AD	R	PIE1AD7	PIE1AD6	PIE1AD5	PIE1AD4	PIE1AD3	PIE1AD2	PIE1AD1	PIE1AD0
	W								
0x027E PIF0AD	R	0	0	0	0	PIF0AD3	PIF0AD2	PIF0AD1	PIF0AD0
	W								
0x027F PIF1AD	R	PIF1AD7	PIF1AD6	PIF1AD5	PIF1AD4	PIF1AD3	PIF1AD2	PIF1AD1	PIF1AD0
	W								

= Unimplemented or Reserved

2.4.3 Register Descriptions

This section describes the details of all configuration registers. Every register has the same functionality in all groups if not specified separately. Refer to the register figures for reserved locations. If not stated differently, writing to reserved bits has not effect and read returns zero.

NOTE

- All register read accesses are synchronous to internal clocks
- General-purpose data output availability depends on prioritization; input data registers always reflect the pin status independent of the use
- Pull-device availability, pull-device polarity, wired-or mode, key-wakeup functionality are independent of the prioritization unless noted differently in section Section 2.3, “PIM Routing - Functional description”.

2.4.3.1 Port A Data Register (PORTA)

Address 0x0000 (G1) Access: User read/write[1]

	7	6	5	4	3	2	1	0
R W	PA7	PA6	PA5	PA4	PA3	PA2	PA1	PA0
Reset	0	0	0	0	0	0	0	0

Address 0x0000 (G2, G3) Access: User read only

	7	6	5	4	3	2	1	0
R	0	0	0	0	0	0	0	0
W								
Reset	0	0	0	0	0	0	0	0

Figure 2-2. Port A Data Register (PORTA)

[1] Read: Anytime. The data source is depending on the data direction value.
Write: Anytime

Table 2-22. PORTA Register Field Descriptions

Field	Description
7-0 PA	**Port A general-purpose input/output data**—Data Register The associated pin can be used as general-purpose I/O. In general-purpose output mode the port data register bit value is driven to the pin. If the associated data direction bit is set to 1, a read returns the value of the port data register bit, otherwise the buffered pin input state is read.

2.4.3.2 Port B Data Register (PORTB)

Address 0x0001 (G1) Access: User read/write[1]

	7	6	5	4	3	2	1	0
R W	PB7	PB6	PB5	PB4	PB3	PB2	PB1	PB0
Reset	0	0	0	0	0	0	0	0

Address 0x0001 (G2, G3) Access: User read only

	7	6	5	4	3	2	1	0
R	0	0	0	0	0	0	0	0
W								
Reset	0	0	0	0	0	0	0	0

Figure 2-3. Port B Data Register (PORTB)

1 Read: Anytime. The data source is depending on the data direction value.
Write: Anytime

Table 2-23. PORTB Register Field Descriptions

Field	Description
7-0 PB	**Port B general-purpose input/output data**—Data Register The associated pin can be used as general-purpose I/O. In general-purpose output mode the port data register bit value is driven to the pin. If the associated data direction bit is set to 1, a read returns the value of the port data register bit, otherwise the buffered pin input state is read.

2.4.3.3 Port A Data Direction Register (DDRA)

Address 0x0002 (G1) Access: User read/write[1]

	7	6	5	4	3	2	1	0
R W	DDRA7	DDRA6	DDRA5	DDRA4	DDRA3	DDRA2	DDRA1	DDRA0
Reset	0	0	0	0	0	0	0	0

Address 0x0002 (G2, G3) Access: User read only

	7	6	5	4	3	2	1	0
R	0	0	0	0	0	0	0	0
W								
Reset	0	0	0	0	0	0	0	0

Figure 2-4. Port A Data Direction Register (DDRA)

1 Read: Anytime
Write: Anytime

Table 2-24. DDRA Register Field Descriptions

Field	Description
7-0 DDRA	**Port A Data Direction**— This bit determines whether the associated pin is an input or output. 1 Associated pin configured as output 0 Associated pin configured as input

2.4.3.4 Port B Data Direction Register (DDRB)

Address 0x0003 (G1) Access: User read/write[1]

	7	6	5	4	3	2	1	0
R W	DDRB7	DDRB6	DDRB5	DDRB4	DDRB3	DDRB2	DDRB1	DDRB0
Reset	0	0	0	0	0	0	0	0

Address 0x0003 (G2, G3) Access: User read only

	7	6	5	4	3	2	1	0
R	0	0	0	0	0	0	0	0
W								
Reset	0	0	0	0	0	0	0	0

Figure 2-5. Port B Data Direction Register (DDRB)

[1] Read: Anytime
Write: Anytime

Table 2-25. DDRB Register Field Descriptions

Field	Description
7-0 DDRB	**Port B Data Direction**— This bit determines whether the associated pin is an input or output. 1 Associated pin configured as output 0 Associated pin configured as input

2.4.3.5 Port C Data Register (PORTC)

Address 0x0004 (G1) Access: User read/write[1]

	7	6	5	4	3	2	1	0
R W	PC7	PC6	PC5	PC4	PC3	PC2	PC1	PC0
Reset	0	0	0	0	0	0	0	0

Address 0x0004 (G2, G3) Access: User read only

	7	6	5	4	3	2	1	0
R	0	0	0	0	0	0	0	0
W								
Reset	0	0	0	0	0	0	0	0

Figure 2-6. Port C Data Register (PORTC)

[1] Read: Anytime. The data source is depending on the data direction value.
Write: Anytime

Table 2-26. PORTC Register Field Descriptions

Field	Description
7-0 PC	**Port C general-purpose input/output data**—Data Register The associated pin can be used as general-purpose I/O. In general-purpose output mode the port data register bit value is driven to the pin. If the associated data direction bit is set to 1, a read returns the value of the port data register bit, otherwise the buffered pin input state is read.

2.4.3.6 Port D Data Register (PORTD)

Address 0x0005 (G1) Access: User read/write[1]

	7	6	5	4	3	2	1	0
R W	PD7	PD6	PD5	PD4	PD3	PD2	PD1	PD0
Reset	0	0	0	0	0	0	0	0

Address 0x0005 (G2, G3) Access: User read only

	7	6	5	4	3	2	1	0
R	0	0	0	0	0	0	0	0
W								
Reset	0	0	0	0	0	0	0	0

Figure 2-7. Port D Data Register (PORTD)

[1] Read: Anytime. The data source is depending on the data direction value.
Write: Anytime

Table 2-27. PORTD Register Field Descriptions

Field	Description
7-0 PD	**Port D general-purpose input/output data**—Data Register The associated pin can be used as general-purpose I/O. In general-purpose output mode the port data register bit value is driven to the pin. If the associated data direction bit is set to 1, a read returns the value of the port data register bit, otherwise the buffered pin input state is read.

2.4.3.7 Port C Data Direction Register (DDRC)

Address 0x0006 (G1) Access: User read/write[1]

	7	6	5	4	3	2	1	0
R W	DDRC7	DDRC6	DDRC5	DDRA4	DDRC3	DDRC2	DDRC1	DDRC0
Reset	0	0	0	0	0	0	0	0

Address 0x0006 (G2, G3) Access: User read only

	7	6	5	4	3	2	1	0
R	0	0	0	0	0	0	0	0
W								
Reset	0	0	0	0	0	0	0	0

Figure 2-8. Port C Data Direction Register (DDRC)

[1] Read: Anytime
Write: Anytime

Table 2-28. DDRC Register Field Descriptions

Field	Description
7-0 DDRC	**Port C Data Direction**— This bit determines whether the associated pin is an input or output. 1 Associated pin configured as output 0 Associated pin configured as input

2.4.3.8 Port D Data Direction Register (DDRD)

Address 0x0007 (G1) Access: User read/write[1]

	7	6	5	4	3	2	1	0
R W	DDRD7	DDRD6	DDRD5	DDRD4	DDRD3	DDRD2	DDRD1	DDRD0
Reset	0	0	0	0	0	0	0	0

Address 0x0007 (G2, G3) Access: User read only

	7	6	5	4	3	2	1	0
R	0	0	0	0	0	0	0	0
W								
Reset	0	0	0	0	0	0	0	0

Figure 2-9. Port D Data Direction Register (DDRD)

[1] Read: Anytime
Write: Anytime

Table 2-29. DDRD Register Field Descriptions

Field	Description
7-0 DDRD	**Port D Data Direction**— This bit determines whether the associated pin is an input or output. 1 Associated pin configured as output 0 Associated pin configured as input

2.4.3.9 Port E Data Register (PORTE)

Address 0x0008 Access: User read/write[1]

	7	6	5	4	3	2	1	0
R	0	0	0	0	0	0	PE1	PE0
W								
Reset	0	0	0	0	0	0	0	0

Figure 2-10. Port E Data Register (PORTE)

[1] Read: Anytime. The data source is depending on the data direction value.
Write: Anytime

Table 2-30. PORTE Register Field Descriptions

Field	Description
1-0 PE	**Port E general-purpose input/output data**—Data Register When not used with an alternative signal, this pin can be used as general-purpose I/O. In general-purpose output mode the port data register bit is driven to the pin. If the associated data direction bit of this pin is set to 1, a read returns the value of the port register, otherwise the buffered pin input state is read.

2.4.3.10 Port E Data Direction Register (DDRE)

Address 0x0009 Access: User read/write[1]

	7	6	5	4	3	2	1	0
R	0	0	0	0	0	0	DDRE1	DDRE0
W								
Reset	0	0	0	0	0	0	0	0

Figure 2-11. Port E Data Direction Register (DDRE)

[1] Read: Anytime
Write: Anytime

Table 2-31. DDRE Register Field Descriptions

Field	Description
1-0 DDRE	**Port E Data Direction**— This bit determines whether the associated pin is an input or output. 1 Associated pin configured as output 0 Associated pin configured as input

2.4.3.11 Ports A, B, C, D, E, BKGD pin Pull Control Register (PUCR)

Address 0x000C (G1) Access: User read/write[1]

	7	6	5	4	3	2	1	0
R	0	BKPUE	0	PDPEE	PUPDE	PUPCE	PUPBE	PUPAE
W								
Reset	0	1	0	1	0	0	0	0

Address 0x000C (G2, G3) Access: User read/write

	7	6	5	4	3	2	1	0
R	0	BKPUE	0	PDPEE	0	0	0	0
W								
Reset	0	1	0	1	0	0	0	0

Figure 2-12. Ports A, B, C, D, E, BKGD pin Pullup Control Register (PUCR)

[1] Read:Anytime in normal mode.
Write:Anytime, except BKPUE, which is writable in special mode only.

Table 2-32. PUCR Register Field Descriptions

Field	Description
6 BKPUE	**BKGD pin Pullup Enable**—Enable pullup device on pin This bit configures whether a pullup device is activated, if the pin is used as input. If a pin is used as output this bit has no effect. Out of reset the pullup device is enabled. 1 Pullup device enabled 0 Pullup device disabled
4 PDPEE	**Port E Pulldown Enable**—Enable pulldown devices on all port input pins This bit configures whether a pulldown device is activated on all associated port input pins. If a pin is used as output or used with the CPMU OSC function this bit has no effect. Out of reset the pulldown devices are enabled. 1 Pulldown devices enabled 0 Pulldown devices disabled
3 PUPDE	**Port D Pullup Enable**—Enable pullup devices on all port input pins This bit configures whether a pullup device is activated on all associated port input pins. If a pin is used as output this bit has no effect. 1 Pullup devices enabled 0 Pullup devices disabled

Table 2-32. PUCR Register Field Descriptions (continued)

Field	Description
2 PUPCE	**Port C Pullup Enable**—Enable pullup devices on all port input pins This bit configures whether a pullup device is activated on all associated port input pins. If a pin is used as output this bit has no effect. 1 Pullup devices enabled 0 Pullup devices disabled
1 PUPBE	**Port B Pullup Enable**—Enable pullup devices on all port input pins This bit configures whether a pullup device is activated on all associated port input pins. If a pin is used as output this bit has no effect. 1 Pullup devices enabled 0 Pullup devices disabled
0 PUPAE	**Port A Pullup Enable**—Enable pullup devices on all port input pins This bit configures whether a pullup device is activated on all associated port input pins. If a pin is used as output this bit has no effect. 1 Pullup devices enabled 0 Pullup devices disabled

2.4.3.12 ECLK Control Register (ECLKCTL)

Address 0x001C Access: User read/write[1]

	7	6	5	4	3	2	1	0
R W	NECLK	NCLKX2	DIV16	EDIV4	EDIV3	EDIV2	EDIV1	EDIV0
Reset:	1	1	0	0	0	0	0	0

Figure 2-13. ECLK Control Register (ECLKCTL)

[1] Read: Anytime
Write: Anytime

Table 2-33. ECLKCTL Register Field Descriptions

Field	Description
7 NECLK	**No ECLK**—Disable ECLK output This bit controls the availability of a free-running clock on the ECLK pin. This clock has a fixed rate equivalent to the internal bus clock. 1 ECLK disabled 0 ECLK enabled
6 NCLKX2	**No ECLKX2**—Disable ECLKX2 output This bit controls the availability of a free-running clock on the ECLKX2 pin. This clock has a fixed rate of twice the internal bus clock. 1 ECLKX2 disabled 0 ECLKX2 enabled
5 DIV16	**Free-running ECLK predivider**—Divide by 16 This bit enables a divide-by-16 stage on the selected EDIV rate. 1 Divider enabled: ECLK rate = EDIV rate divided by 16 0 Divider disabled: ECLK rate = EDIV rate
4-0 EDIV	**Free-running ECLK Divider**—Configure ECLK rate These bits determine the rate of the free-running clock on the ECLK pin. 00000 ECLK rate = bus clock rate 00001 ECLK rate = bus clock rate divided by 2 00010 ECLK rate = bus clock rate divided by 3,... 11111 ECLK rate = bus clock rate divided by 32

2.4.3.13 IRQ Control Register (IRQCR)

Address 0x001E Access: User read/write[1]

	7	6	5	4	3	2	1	0
R	IRQE	IRQEN	0	0	0	0	0	0
W								
Reset	0	0	0	0	0	0	0	0

Figure 2-14. IRQ Control Register (IRQCR)

[1] Read: Anytime
Write:
IRQE: Once in normal mode, anytime in special mode
IRQEN: Anytime

Table 2-34. IRQCR Register Field Descriptions

Field	Description
7 IRQE	**IRQ select edge sensitive only**— 1 $\overline{\text{IRQ}}$ pin configured to respond only to falling edges. Falling edges on the $\overline{\text{IRQ}}$ pin are detected anytime when IRQE=1 and will be cleared only upon a reset or the servicing of the IRQ interrupt. 0 $\overline{\text{IRQ}}$ pin configured for low level recognition
6 IRQEN	**IRQ enable**— 1 $\overline{\text{IRQ}}$ pin is connected to interrupt logic 0 $\overline{\text{IRQ}}$ pin is disconnected from interrupt logic

NOTE

If the input is driven to active level ($\overline{\text{IRQ}}$=0) a write access to set either IRQCR[IRQEN] and IRQCR[IRQE] to 1 simultaneously or to set IRQCR[IRQEN] to 1 when IRQCR[IRQE]=1 causes an IRQ interrupt to be generated if the I-bit is cleared. Refer to Section 2.6.3, “Enabling IRQ edge-sensitive mode”.

2.4.3.14 Reserved Register

Address 0x001F — Access: User read/write[1]

	7	6	5	4	3	2	1	0
R W	Reserved	Reserved	Reserved	Reserved	Reserved	Reserved	Reserved	Reserved
Reset	x	x	x	x	x	x	x	x

Figure 2-15. Reserved Register

[1] Read: Anytime
Write: Only in special mode

These reserved registers are designed for factory test purposes only and are not intended for general user access. Writing to these registers when in special mode can alter the module’s functionality.

2.4.3.15 Port T Data Register (PTT)

Address 0x0240 (G1, G2) Access: User read/write[1]

	7	6	5	4	3	2	1	0
R	PTT7	PTT6	PTT5	PTT4	PTT3	PTT2	PTT1	PTT0
W								
Reset	0	0	0	0	0	0	0	0

Address 0x0240 (G3) Access: User read/write[1]

	7	6	5	4	3	2	1	0
R	0	0	PTT5	PTT4	PTT3	PTT2	PTT1	PTT0
W								
Reset	0	0	0	0	0	0	0	0

Figure 2-16. Port T Data Register (PTT)

[1] Read: Anytime. The data source is depending on the data direction value.
Write: Anytime

Table 2-35. PTT Register Field Descriptions

Field	Description
7-0 PTT	**Port T general-purpose input/output data**—Data Register When not used with an alternative signal, the associated pin can be used as general-purpose I/O. In general-purpose output mode the port data register bit value is driven to the pin. If the associated data direction bit is set to 1, a read returns the value of the port data register bit, otherwise the buffered pin input state is read.

2.4.3.16 Port T Input Register (PTIT)

Address 0x0241 (G1, G2) Access: User read only[1]

	7	6	5	4	3	2	1	0
R	PTIT7	PTIT6	PTIT5	PTIT4	PTIT3	PTIT2	PTIT1	PTIT0
W								
Reset	0	0	0	0	0	0	0	0

Address 0x0241 (G3) Access: User read only[1]

	7	6	5	4	3	2	1	0
R	0	0	PTIT5	PTIT4	PTIT3	PTIT2	PTIT1	PTIT0
W								
Reset	0	0	0	0	0	0	0	0

Figure 2-17. Port T Input Register (PTIT)

[1] Read: Anytime
Write:Never

Table 2-36. PTIT Register Field Descriptions

Field	Description
7-0 PTIT	**Port T input data**— A read always returns the buffered input state of the associated pin. It can be used to detect overload or short circuit conditions on output pins.

2.4.3.17 Port T Data Direction Register (DDRT)

Address 0x0242 (G1, G2) Access: User read/write[1]

	7	6	5	4	3	2	1	0
R W	DDRT7	DDRT6	DDRT5	DDRT4	DDRT3	DDRT2	DDRT1	DDRT0
Reset	0	0	0	0	0	0	0	0

Address 0x0242 (G3) Access: User read/write[1]

	7	6	5	4	3	2	1	0
R	0	0	DDRT5	DDRT4	DDRT3	DDRT2	DDRT1	DDRT0
W								
Reset	0	0	0	0	0	0	0	0

Figure 2-18. Port T Data Direction Register (DDRT)

[1] Read: Anytime
Write: Anytime

Table 2-37. DDRT Register Field Descriptions

Field	Description
7-0 DDRT	**Port T data direction**— This bit determines whether the pin is a general-purpose input or output. 1 Associated pin configured as output 0 Associated pin configured as input

2.4.3.18 Port T Pull Device Enable Register (PERT)

Address 0x0244 (G1, G2) Access: User read/write[1]

	7	6	5	4	3	2	1	0
R W	PERT7	PERT6	PERT5	PERT4	PERT3	PERT2	PERT1	PERT0
Reset	0	0	0	0	0	0	0	0

Address 0x0244 (G3) Access: User read/write[1]

	7	6	5	4	3	2	1	0
R	0	0	PERT5	PERT4	PERT3	PERT2	PERT1	PERT0
W								
Reset	0	0	0	0	0	0	0	0

Figure 2-19. Port T Pull Device Enable Register (PERT)

[1] Read: Anytime
Write: Anytime

Table 2-38. PERT Register Field Descriptions

Field	Description
7-2 PERT	**Port T pull device enable**—Enable pull device on input pin This bit controls whether a pull device on the associated port input pin is active. If a pin is used as output this bit has no effect. The polarity is selected by the related polarity select register bit. 1 Pull device enabled 0 Pull device disabled
1 PERT	**Port T pull device enable**—Enable pull device on input pin This bit controls whether a pull device on the associated port input pin is active. The polarity is selected by the related polarity select register bit. If this pin is used as IRQ only a pullup device can be enabled. 1 Pull device enabled 0 Pull device disabled
0 PERT	**Port T pull device enable**—Enable pull device on input pin This bit controls whether a pull device on the associated port input pin is active. The polarity is selected by the related polarity select register bit. If this pin is used as XIRQ only a pullup device can be enabled. 1 Pull device enabled 0 Pull device disabled

2.4.3.19 Port T Polarity Select Register (PPST)

Address 0x0245 (G1, G2) Access: User read/write[1]

	7	6	5	4	3	2	1	0
R W	PPST7	PPST6	PPST5	PPST4	PPST3	PPST2	PPST1	PPST0
Reset	0	0	0	0	0	0	0	0

Address 0x0245 (G3) Access: User read/write[1]

	7	6	5	4	3	2	1	0
R	0	0	PPST5	PPST4	PPST3	PPST2	PPST1	PPST0
W								
Reset	0	0	0	0	0	0	0	0

Figure 2-20. Port T Polarity Select Register (PPST)

[1] Read: Anytime
Write: Anytime

Table 2-39. PPST Register Field Descriptions

Field	Description
7-0 PPST	**Port T pull device select**—Configure pull device polarity on input pin This bit selects a pullup or a pulldown device if enabled on the associated port input pin. 1 Pulldown device selected 0 Pullup device selected

2.4.3.20 Port S Data Register (PTS)

Address 0x0248 Access: User read/write[1]

	7	6	5	4	3	2	1	0
R W	PTS7	PTS6	PTS5	PTS4	PTS3	PTS2	PTS1	PTS0
	0	0	0	0	0	0	0	0

Figure 2-21. Port S Data Register (PTS)

[1] Read: Anytime. The data source is depending on the data direction value.
Write: Anytime

Table 2-40. PTS Register Field Descriptions

Field	Description
7-0 PTS	**Port S general-purpose input/output data**—Data Register When not used with an alternative signal, the associated pin can be used as general-purpose I/O. In general-purpose output mode the port data register bit value is driven to the pin. If the associated data direction bit is set to 1, a read returns the value of the port data register bit, otherwise the buffered pin input state is read.

2.4.3.21 Port S Input Register (PTIS)

Address 0x0249 Access: User read only[1]

	7	6	5	4	3	2	1	0
R	PTIS7	PTIS6	PTIS5	PTIS4	PTIS3	PTIS2	PTIS1	PTIS0
W								
Reset	0	0	0	0	0	0	0	0

Figure 2-22. Port S Input Register (PTIS)

1 Read: Anytime
Write:Never

Table 2-41. PTIS Register Field Descriptions

Field	Description
7-0 PTIS	**Port S input data**— A read always returns the buffered input state of the associated pin. It can be used to detect overload or short circuit conditions on output pins.

2.4.3.22 Port S Data Direction Register (DDRS)

Address 0x024A Access: User read/write[1]

	7	6	5	4	3	2	1	0
R W	DDRS7	DDRS6	DDRS5	DDRS4	DDRS3	DDRS2	DDRS1	DDRS0
Reset	0	0	0	0	0	0	0	0

Figure 2-23. Port S Data Direction Register (DDRS)

1 Read: Anytime
Write: Anytime

Table 2-42. DDRS Register Field Descriptions

Field	Description
7-0 DDRS	**Port S data direction**— This bit determines whether the associated pin is a general-purpose input or output. 1 Associated pin configured as output 0 Associated pin configured as input

2.4.3.23 Port S Pull Device Enable Register (PERS)

Address 0x024C Access: User read/write[1]

	7	6	5	4	3	2	1	0
R W	PERS7	PERS6	PERS5	PERS4	PERS3	PERS2	PERS1	PERS0
Reset	1	1	1	1	1	1	1	1

Figure 2-24. Port S Pull Device Enable Register (PERS)

[1] Read: Anytime
Write: Anytime

Table 2-43. PERS Register Field Descriptions

Field	Description
7-0 PERS	**Port S pull device enable**—Enable pull device on input pin or wired-or output pin This bit controls whether a pull device on the associated port input pin is active. The polarity is selected by the related polarity select register bit. If a pin is used as output this bit has only effect if used in wired-or mode with a pullup device. 1 Pull device enabled 0 Pull device disabled

2.4.3.24 Port S Polarity Select Register (PPSS)

Address 0x024D Access: User read/write[1]

	7	6	5	4	3	2	1	0
R W	PPSS7	PPSS6	PPSS5	PPSS4	PPSS3	PPSS2	PPSS1	PPSS0
Reset	0	0	0	0	0	0	0	0

Figure 2-25. Port S Polarity Select Register (PPSS)

[1] Read: Anytime
Write: Anytime

Table 2-44. PPSS Register Field Descriptions

Field	Description
7-0 PPSS	**Port S pull device select**—Configure pull device polarity on input pin This bit selects a pullup or a pulldown device if enabled on the associated port input pin. 1 Pulldown device selected 0 Pullup device selected

2.4.3.25 Port S Wired-Or Mode Register (WOMS)

Address 0x024E Access: User read/write[1]

	7	6	5	4	3	2	1	0
R W	WOMS7	WOMS6	WOMS5	WOMS4	WOMS3	WOMS2	WOMS1	WOMS0
Reset	0	0	0	0	0	0	0	0

Figure 2-26. Port S Wired-Or Mode Register (WOMS)

[1] Read: Anytime
Write: Anytime

Table 2-45. WOMS Register Field Descriptions

Field	Description
7-0 WOMS	**Port S wired-or mode**—Enable open-drain functionality on output pin This bit configures an output pin as wired-or (open-drain) or push-pull. In wired-or mode a logic “0” is driven active-low while a logic “1” remains undriven. This allows a multipoint connection of several serial modules. The bit has no influence on pins used as input. 1 Output buffer operates as open-drain output. 0 Output buffer operates as push-pull output.

2.4.3.26 Pin Routing Register 0 (PRR0)

NOTE

Routing takes only effect if PKGCR is set to select the 20 TSSOP package.

Address 0x024F Access: User read/write[1]

	7	6	5	4	3	2	1	0
R W	PRR0P3	PRR0P2	PRR0T31	PRR0T30	PRR0T21	PRR0T20	PRR0S1	PRR0S0
Reset	0	0	0	0	0	0	0	0

Figure 2-27. Pin Routing Register (PRR0)

[1] Read: Anytime
Write: Anytime

Table 2-46. PRR0 Register Field Descriptions

Field	Description
7 PRR0P3	**Pin Routing Register PWM3** —Select alternative routing of PWM3 output, ETRIG3 input This bit programs the routing of the PWM3 channel and the ETRIG3 input to a different external pin in 20 TSSOP. See Table 2-47 for more details.
6 PRR0P2	**Pin Routing Register PWM2** —Select alternative routing of PWM2 output, ETRIG2 input This bit programs the routing of the PWM2 channel and the ETRIG2 input to a different external pin in 20 TSSOP. See Table 2-48 for more details.
5 PRR0T31	**Pin Routing Register IOC3** —Select alternative routing of IOC3 output and input Those two bits program the routing of the timer IOC3 channel to different external pins in 20 TSSOP. See Table 2-49 for more details.
4 PRR0T30	
3 PRR0T21	**Pin Routing Register IOC2** —Select alternative routing of IOC2 output and input Those two bits program the routing of the timer IOC2 channel to different external pins in 20 TSSOP. See Table 2-50 for more details.
2 PRR0T20	
1 PRR0S1	**Pin Routing Register Serial Module** —Select alternative routing of SCI0 pins Those bits program the routing of the SCI0 module pins to different external pins in 20 TSSOP. See Table 2-51 for more details.
0 PRR0S0	

Table 2-47. PWM3/ETRIG3 Routing Options

PRR0P3	PWM3/ETRIG3 Associated Pin
0	PS7 - PWM3, ETRIG3
1	PAD5 - PWM3, ETRIG3

Table 2-48. PWM2/ETRIG2 Routing Options

PRR0P2	PWM2/ETRIG2 Associated Pin
0	PS4 - PWM2, ETRIG2
1	PAD4 - PWM2, ETRIG2

Table 2-49. IOC3 Routing Options

PRR0T31	PRR0T30	IOC3 Associated Pin
0	0	PS6 - IOC3
0	1	PE1 - IOC3
1	0	PAD5 - IOC3
1	1	Reserved

Table 2-50. IOC2 Routing Options

PRR0T21	PRR0T20	IOC2 Associated Pin
0	0	PS5 - IOC2
0	1	PE0 - IOC2
1	0	PAD4 - IOC2
1	1	Reserved

Table 2-51. SCI0 Routing Options

PRR0S1	PRR0S0	SCI0 Associated Pin
0	0	PE0 - RXD, PE1 - TXD
0	1	PS4 - RXD, PS7 - TXD
1	0	PAD4 - RXD, PAD5 - TXD
1	1	Reserved

2.4.3.27 Port M Data Register (PTM)

Address 0x0250 (G1, G2) Access: User read/write[1]

	7	6	5	4	3	2	1	0
R	0	0	0	0	PTM3	PTM2	PTM1	PTM0
W								
Reset	0	0	0	0	0	0	0	0

Address 0x0250 (G3) Access: User read/write[1]

	7	6	5	4	3	2	1	0
R	0	0	0	0	0	0	PTM1	PTM0
W								
Reset	0	0	0	0	0	0	0	0

Figure 2-28. Port M Data Register (PTM)

[1] Read: Anytime. The data source is depending on the data direction value.
Write: Anytime

Table 2-52. PTM Register Field Descriptions

Field	Description
3-0 PTM	**Port M general-purpose input/output data**—Data Register When not used with an alternative signal, the associated pin can be used as general-purpose I/O. In general-purpose output mode the port data register bit value is driven to the pin. If the associated data direction bit is set to 1, a read returns the value of the port data register bit, otherwise the buffered pin input state is read.

2.4.3.28 Port M Input Register (PTIM)

Address 0x0251 (G1, G2) Access: User read only[1]

	7	6	5	4	3	2	1	0
R	0	0	0	0	PTIM3	PTIM2	PTIM1	PTIM0
W								
Reset	0	0	0	0	0	0	0	0

Address 0x0251 (G3) Access: User read only[1]

	7	6	5	4	3	2	1	0
R	0	0	0	0	0	0	PTIM1	PTIM0
W								
Reset	0	0	0	0	0	0	0	0

Figure 2-29. Port M Input Register (PTIM)

[1] Read: Anytime
Write:Never

Table 2-53. PTIM Register Field Descriptions

Field	Description
3-0 PTIM	**Port M input data**— A read always returns the buffered input state of the associated pin. It can be used to detect overload or short circuit conditions on output pins.

2.4.3.29 Port M Data Direction Register (DDRM)

Address 0x0252 (G1, G2) Access: User read/write[1]

	7	6	5	4	3	2	1	0
R	0	0	0	0	DDRM3	DDRM2	DDRM1	DDRM0
W								
Reset	0	0	0	0	0	0	0	0

Address 0x0252 (G3) Access: User read/write[1]

	7	6	5	4	3	2	1	0
R	0	0	0	0	0	0	DDRM1	DDRM0
W								
Reset	0	0	0	0	0	0	0	0

Figure 2-30. Port M Data Direction Register (DDRM)

[1] Read: Anytime
Write: Anytime

Table 2-54. DDRM Register Field Descriptions

Field	Description
3-0 DDRM	**Port M data direction**— This bit determines whether the associated pin is a general-purpose input or output. 1 Associated pin configured as output 0 Associated pin configured as input

2.4.3.30 Port M Pull Device Enable Register (PERM)

Address 0x0254 (G1, G2) Access: User read/write[1]

	7	6	5	4	3	2	1	0
R	0	0	0	0	PERM3	PERM2	PERM1	PERM0
W								
Reset	0	0	0	0	0	0	0	0

Address 0x0254 (G3) Access: User read/write[1]

	7	6	5	4	3	2	1	0
R	0	0	0	0	0	0	PERM1	PERM0
W								
Reset	0	0	0	0	0	0	0	0

Figure 2-31. Port M Pull Device Enable Register (PERM)

[1] Read: Anytime
Write: Anytime

Table 2-55. PERM Register Field Descriptions

Field	Description
3-1 PERM	**Port M pull device enable**—Enable pull device on input pin or wired-or output pin This bit controls whether a pull device on the associated port input pin is active. The polarity is selected by the related polarity select register bit. If a pin is used as output this bit has only effect if used in wired-or mode with a pullup device. 1 Pull device enabled 0 Pull device disabled
0 PERM	**Port M pull device enable**—Enable pull device on input pin or wired-or output pin This bit controls whether a pull device on the associated port input pin is active. The polarity is selected by the related polarity select register bit. If a pin is used as output this bit has only effect if used in wired-or mode with a pullup device. If CAN is active the selection of a pulldown device on the RXCAN input will have no effect. 1 Pull device enabled 0 Pull device disabled

2.4.3.31 Port M Polarity Select Register (PPSM)

Address 0x0255 (G1, G2) Access: User read/write[1]

	7	6	5	4	3	2	1	0
R	0	0	0	0	PPSM3	PPSM2	PPSM1	PPSM0
W								
Reset	0	0	0	0	0	0	0	0

Address 0x0255 (G3) Access: User read/write[1]

	7	6	5	4	3	2	1	0
R	0	0	0	0	0	0	PPSM1	PPSM0
W								
Reset	0	0	0	0	0	0	0	0

Figure 2-32. Port M Polarity Select Register (PPSM)

[1] Read: Anytime
Write: Anytime

Table 2-56. PPSM Register Field Descriptions

Field	Description
3-0 PPSM	**Port M pull device select**—Configure pull device polarity on input pin This bit selects a pullup or a pulldown device if enabled on the associated port input pin. 1 Pulldown device selected 0 Pullup device selected

2.4.3.32 Port M Wired-Or Mode Register (WOMM)

Address 0x0256 (G1, G2) Access: User read/write[1]

	7	6	5	4	3	2	1	0
R	0	0	0	0	WOMM3	WOMM2	WOMM1	WOMM0
W								
Reset	0	0	0	0	0	0	0	0

Address 0x0256 (G3) Access: User read/write[1]

	7	6	5	4	3	2	1	0
R	0	0	0	0	0	0	WOMM1	WOMM0
W								
Reset	0	0	0	0	0	0	0	0

Figure 2-33. Port M Wired-Or Mode Register (WOMM)

[1] Read: Anytime
Write: Anytime

Table 2-57. WOMM Register Field Descriptions

Field	Description
3-0 WOMM	**Port M wired-or mode**—Enable open-drain functionality on output pin This bit configures an output pin as wired-or (open-drain) or push-pull. In wired-or mode a logic “0” is driven active-low while a logic “1” remains undriven. This allows a multipoint connection of several serial modules. The bit has no influence on pins used as input. 1 Output buffer operates as open-drain output. 0 Output buffer operates as push-pull output.

2.4.3.33 Package Code Register (PKGCR)

Address 0x0257 Access: User read/write[1]

	7	6	5	4	3	2	1	0
R	APICLKS7	0	0	0	0	PKGCR2	PKGCR1	PKGCR0
W								
Reset	0	0	0	0	0	F	F	F

After deassert of system reset the values are automatically loaded from the Flash memory. See device specification for details.

Figure 2-34. Package Code Register (PKGCR)

[1] Read: Anytime
Write:
APICLKS7: Anytime
PKGCR2-0: Once in normal mode, anytime in special mode

Table 2-58. PKGCR Register Field Descriptions

Field	Description
7 APICLKS7	**Pin Routing Register API_EXTCLK** —Select PS7 as API_EXTCLK output When set to 1 the API_EXTCLK output will be routed to PS7. The default pin will be disconnected in all packages except 20 TSSOP, which has no default location for API_EXTCLK. See Table 2-59 for more details.
2-0 PKGCR	**Package Code Register** —Select package in use Those bits are preset by factory and reflect the package in use. See Table 2-60 for code definition. The bits can be modified once after reset to allow software development for a different package. In any other application it is recommended to re-write the actual package code once after reset to lock the register from inadvertent changes during operation. Writing reserved codes or codes of larger packages than the given device is offered in are illegal. In these cases the code will be converted to PKGCR[2:0]=0b111 and select the maximum available package option for the given device. Codes writes of smaller packages than the given device is offered in are not restricted. Depending on the package selection the input buffers of non-bonded pins are disabled to avoid shoot-through current. Also a predefined signal routing will take effect. Refer also to Section 2.6.5, “Emulation of Smaller Packages”.

Table 2-59. API_EXTCLK Routing Options

APICLKS7	API_EXTCLK Associated Pin
0	PB1 (100 LQFP) PP0 (64/48/32 LQFP) N.C. (20TSSOP)
1	PS7

Table 2-60. Package Options

PKGCR2	PKGCR1	PKGCR0	Selected Package
1	1	1	Reserved[1]
1	1	0	100 LQFP
1	0	1	Reserved
1	0	0	64 LQFP
0	1	1	48 LQFP
0	1	0	Reserved
0	0	1	32 LQFP
0	0	0	20 TSSOP

1 Reading this value indicates an illegal code write or uninitialized factory programming.

2.4.3.34 Port P Data Register (PTP)

Address 0x0258 (G1, G2) Access: User read/write[1]

	7	6	5	4	3	2	1	0
R W	PTP7	PTP6	PTP5	PTP4	PTP3	PTP2	PTP1	PTP0
Reset	0	0	0	0	0	0	0	0

Address 0x0258 (G3) Access: User read/write[1]

	7	6	5	4	3	2	1	0
R	0	0	PTP5	PTP4	PTP3	PTP2	PTP1	PTP0
W								
Reset	0	0	0	0	0	0	0	0

Figure 2-35. Port P Data Register (PTP)

1 Read: Anytime. The data source is depending on the data direction value.
Write: Anytime

Table 2-61. PTP Register Field Descriptions

Field	Description
7-0 PTP	**Port P general-purpose input/output data**—Data Register When not used with an alternative signal, the associated pin can be used as general-purpose I/O. In general-purpose output mode the port data register bit value is driven to the pin. If the associated data direction bit is set to 1, a read returns the value of the port data register bit, otherwise the buffered pin input state is read.

2.4.3.35 Port P Input Register (PTIP)

Address 0x0259 (G1, G2) Access: User read only[1]

	7	6	5	4	3	2	1	0
R	PTIP7	PTIP6	PTIP5	PTIP4	PTIP3	PTIP2	PTIP1	PTIP0
W								
Reset	0	0	0	0	0	0	0	0

Address 0x0259 (G3) Access: User read only[1]

	7	6	5	4	3	2	1	0
R	0	0	PTIP5	PTIP4	PTIP3	PTIP2	PTIP1	PTIP0
W								
Reset	0	0	0	0	0	0	0	0

Figure 2-36. Port P Input Register (PTIP)

[1] Read: Anytime
Write:Never

Table 2-62. PTIP Register Field Descriptions

Field	Description
7-0 PTIP	**Port P input data**— A read always returns the buffered input state of the associated pin. It can be used to detect overload or short circuit conditions on output pins.

2.4.3.36 Port P Data Direction Register (DDRP)

Address 0x025A (G1, G2) Access: User read/write[1]

	7	6	5	4	3	2	1	0
R W	DDRP7	DDRP6	DDRP5	DDRP4	DDRP3	DDRP2	DDRP1	DDRP0
Reset	0	0	0	0	0	0	0	0

Address 0x025A (G3) Access: User read/write[1]

	7	6	5	4	3	2	1	0
R	0	0	DDRP5	DDRP4	DDRP3	DDRP2	DDRP1	DDRP0
W								
Reset	0	0	0	0	0	0	0	0

Figure 2-37. Port P Data Direction Register (DDRP)

[1] Read: Anytime
Write: Anytime

Table 2-63. DDRP Register Field Descriptions

Field	Description
7-0 DDRP	**Port P data direction**— This bit determines whether the associated pin is an input or output. 1 Associated pin configured as output 0 Associated pin configured as input

2.4.3.37 Port P Pull Device Enable Register (PERP)

Address 0x025C (G1, G2) Access: User read/write[1]

	7	6	5	4	3	2	1	0
R W	PERP7	PERP6	PERP5	PERP4	PERP3	PERP2	PERP1	PERP0
Reset	0	0	0	0	0	0	0	0

Address 0x025C (G3) Access: User read/write[1]

	7	6	5	4	3	2	1	0
R	0	0	PERP5	PERP4	PERP3	PERP2	PERP1	PERP0
W								
Reset	0	0	0	0	0	0	0	0

Figure 2-38. Port P Pull Device Enable Register (PERP)

[1] Read: Anytime
Write: Anytime

Table 2-64. PERP Register Field Descriptions

Field	Description
7-0 PERP	**Port P pull device enable**—Enable pull device on input pin This bit controls whether a pull device on the associated port input pin is active. If a pin is used as output this bit has no effect. The polarity is selected by the related polarity select register bit. 1 Pull device enabled 0 Pull device disabled

2.4.3.38 Port P Polarity Select Register (PPSP)

Address 0x025D (G1, G2) Access: User read/write[1]

	7	6	5	4	3	2	1	0
R W	PPSP7	PPSP6	PPSP5	PPSP4	PPSP3	PPSP2	PPSP1	PPSP0
Reset	0	0	0	0	0	0	0	0

Address 0x025D (G3) Access: User read/write[1]

	7	6	5	4	3	2	1	0
R	0	0	PPSP5	PPSP4	PPSP3	PPSP2	PPSP1	PPSP0
W								
Reset	0	0	0	0	0	0	0	0

Figure 2-39. Port P Polarity Select Register (PPSP)

[1] Read: Anytime
Write: Anytime

Table 2-65. PPSP Register Field Descriptions

Field	Description
7-0 PPSP	**Port P pull device select**—Configure pull device and pin interrupt edge polarity on input pin This bit selects a pullup or a pulldown device if enabled on the associated port input pin. This bit also selects the polarity of the active pin interrupt edge. 1 Pulldown device selected; rising edge selected 0 Pullup device selected; falling edge selected

2.4.3.39 Port P Interrupt Enable Register (PIEP)

Address 0x025E (G1, G2) Access: User read/write[1]

	7	6	5	4	3	2	1	0
R W	PIEP7	PIEP6	PIEP5	PIEP4	PIEP3	PIEP2	PIEP1	PIEP0
Reset	0	0	0	0	0	0	0	0

Address 0x025E (G3) Access: User read/write[1]

	7	6	5	4	3	2	1	0
R	0	0	PIEP5	PIEP4	PIEP3	PIEP2	PIEP1	PIEP0
W								
Reset	0	0	0	0	0	0	0	0

Figure 2-40. Port P Interrupt Enable Register (PIEP)

[1] Read: Anytime
Write: Anytime

Table 2-66. PIEP Register Field Descriptions

Field	Description
7-0 PIEP	**Port P interrupt enable**— This bit enables or disables the edge sensitive pin interrupt on the associated pin. An interrupt can be generated if the pin is operating in input or output mode when in use with the general-purpose or related peripheral function. 1 Interrupt is enabled 0 Interrupt is disabled (interrupt flag masked)

2.4.3.40 Port P Interrupt Flag Register (PIFP)

Address 0x025F (G1, G2) Access: User read/write[1]

	7	6	5	4	3	2	1	0
R W	PIFP7	PIFP6	PIFP5	PIFP4	PIFP3	PIFP2	PIFP1	PIFP0
Reset	0	0	0	0	0	0	0	0

Address 0x025F (G3) Access: User read/write[1]

	7	6	5	4	3	2	1	0
R	0	0	PIFP5	PIFP4	PIFP3	PIFP2	PIFP1	PIFP0
W								
Reset	0	0	0	0	0	0	0	0

Figure 2-41. Port P Interrupt Flag Register (PIFP)

[1] Read: Anytime
Write: Anytime, write 1 to clear

Table 2-67. PIFP Register Field Descriptions

Field	Description
7-0 PIFP	**Port P interrupt flag**— This flag asserts after a valid active edge was detected on the related pin (see Section 2.5.4.2, “Pin Interrupts and Wakeup”). This can be a rising or a falling edge based on the state of the polarity select register. An interrupt will occur if the associated interrupt enable bit is set. Writing a logic “1” to the corresponding bit field clears the flag. 1 Active edge on the associated bit has occurred 0 No active edge occurred

2.4.3.41 Reserved Registers

NOTE

Addresses 0x0260-0x0261 are reserved for ACMP registers in G2 and G3 only. Refer to ACMP section "ACMP Control Register (ACMPC)" and "ACMP Status Register (ACMPS)".

2.4.3.42 Port J Data Register (PTJ)

Address 0x0268 (G1, G2) Access: User read/write[1]

	7	6	5	4	3	2	1	0
R	PTJ7	PTJ6	PTJ5	PTJ4	PTJ3	PTJ2	PTJ1	PTJ0
W								
Reset	0	0	0	0	0	0	0	0

Address 0x0268 (G3) Access: User read/write[1]

	7	6	5	4	3	2	1	0
R	0	0	0	0	PTJ3	PTJ2	PTJ1	PTJ0
W								
Reset	0	0	0	0	0	0	0	0

Figure 2-42. Port J Data Register (PTJ)

[1] Read: Anytime. The data source is depending on the data direction value.
Write: Anytime

Table 2-68. PTJ Register Field Descriptions

Field	Description
7-0 PTJ	**Port J general-purpose input/output data**—Data Register When not used with an alternative signal, the associated pin can be used as general-purpose I/O. In general-purpose output mode the port data register bit value is driven to the pin. If the associated data direction bit is set to 1, a read returns the value of the port data register bit, otherwise the buffered pin input state is read.

2.4.3.43 Port J Input Register (PTIJ)

Address 0x0269 (G1, G2) Access: User read only[1]

	7	6	5	4	3	2	1	0
R	PTIJ7	PTIJ6	PTIJ5	PTIJ4	PTIJ3	PTIJ2	PTIJ1	PTIJ0
W								
Reset	0	0	0	0	0	0	0	0

Address 0x0269 (G3) Access: User read only[1]

	7	6	5	4	3	2	1	0
R	0	0	0	0	PTIJ3	PTIJ2	PTIJ1	PTIJ0
W								
Reset	0	0	0	0	0	0	0	0

Figure 2-43. Port J Input Register (PTIJ)

[1] Read: Anytime
Write:Never

Table 2-69. PTIJ Register Field Descriptions

Field	Description
7-0 PTIJ	**Port J input data**— A read always returns the buffered input state of the associated pin. It can be used to detect overload or short circuit conditions on output pins.

2.4.3.44 Port J Data Direction Register (DDRJ)

Address 0x026A (G1, G2) Access: User read/write[1]

	7	6	5	4	3	2	1	0
R W	DDRJ7	DDRJ6	DDRJ5	DDRJ4	DDRJ3	DDRJ2	DDRJ1	DDRJ0
Reset	0	0	0	0	0	0	0	0

Address 0x026A (G3) Access: User read/write[1]

	7	6	5	4	3	2	1	0
R	0	0	0	0	DDRJ3	DDRJ2	DDRJ1	DDRJ0
W								
Reset	0	0	0	0	0	0	0	0

Figure 2-44. Port J Data Direction Register (DDRJ)

[1] Read: Anytime
Write: Anytime

Table 2-70. DDRJ Register Field Descriptions

Field	Description
7-0 DDRJ	**Port J data direction**— This bit determines whether the associated pin is an input or output. 1 Associated pin configured as output 0 Associated pin configured as input

2.4.3.45 Port J Pull Device Enable Register (PERJ)

Address 0x026C (G1, G2) Access: User read/write[1]

	7	6	5	4	3	2	1	0
R W	PERJ7	PERJ6	PERJ5	PERJ4	PERJ3	PERJ2	PERJ1	PERJ0
Reset	1	1	1	1	1	1	1	1

Address 0x026C (G3) Access: User read/write[1]

	7	6	5	4	3	2	1	0
R	0	0	0	0	PERJ3	PERJ2	PERJ1	PERJ0
W								
Reset	0	0	0	0	1	1	1	1

Figure 2-45. Port J Pull Device Enable Register (PERJ)

[1] Read: Anytime
Write: Anytime

Table 2-71. PERJ Register Field Descriptions

Field	Description
7-0 PERJ	**Port J pull device enable**—Enable pull device on input pin This bit controls whether a pull device on the associated port input pin is active. If a pin is used as output this bit has no effect. The polarity is selected by the related polarity select register bit. 1 Pull device enabled 0 Pull device disabled

2.4.3.46 Port J Polarity Select Register (PPSJ)

Address 0x026D (G1, G2) Access: User read/write[1]

	7	6	5	4	3	2	1	0
R W	PPSJ7	PPSJ6	PPSJ5	PPSJ4	PPSJ3	PPSJ2	PPSJ1	PPSJ0
Reset	0	0	0	0	0	0	0	0

Address 0x026D (G3) Access: User read/write[1]

	7	6	5	4	3	2	1	0
R	0	0	0	0	PPSJ3	PPSJ2	PPSJ1	PPSJ0
W								
Reset	0	0	0	0	0	0	0	0

Figure 2-46. Port J Polarity Select Register (PPSJ)

[1] Read: Anytime
Write: Anytime

Table 2-72. PPSJ Register Field Descriptions

Field	Description
7-0 PPSJ	**Port J pull device select**—Configure pull device and pin interrupt edge polarity on input pin This bit selects a pullup or a pulldown device if enabled on the associated port input pin. This bit also selects the polarity of the active pin interrupt edge. 1 Pulldown device selected; rising edge selected 0 Pullup device selected; falling edge selected

2.4.3.47 Port J Interrupt Enable Register (PIEJ)

Address 0x026E (G1, G2) Access: User read/write[1]

	7	6	5	4	3	2	1	0
R W	PIEJ7	PIEJ6	PIEJ5	PIEJ4	PIEJ3	PIEJ2	PIEJ1	PIEJ0
Reset	0	0	0	0	0	0	0	0

Address 0x026E (G3) Access: User read/write[1]

	7	6	5	4	3	2	1	0
R	0	0	0	0	PIEJ3	PIEJ2	PIEJ1	PIEJ0
W								
Reset	0	0	0	0	0	0	0	0

Figure 2-47. Port J Interrupt Enable Register (PIEJ)

[1] Read: Anytime
Write: Anytime

Table 2-73. PIEJ Register Field Descriptions

Field	Description
7-0 PIEJ	**Port J interrupt enable**— This bit enables or disables the edge sensitive pin interrupt on the associated pin. An interrupt can be generated if the pin is operating in input or output mode when in use with the general-purpose or related peripheral function. 1 Interrupt is enabled 0 Interrupt is disabled (interrupt flag masked)

2.4.3.48 Port J Interrupt Flag Register (PIFJ)

Address 0x026F (G1, G2) Access: User read/write[1]

	7	6	5	4	3	2	1	0
R W	PIFJ7	PIFJ6	PIFJ5	PIFJ4	PIFJ3	PIFJ2	PIFJ1	PIFJ0
Reset	0	0	0	0	0	0	0	0

Address 0x026F (G3) Access: User read/write[1]

	7	6	5	4	3	2	1	0
R	0	0	0	0	PIFJ3	PIFJ2	PIFJ1	PIFJ0
W								
Reset	0	0	0	0	0	0	0	0

Figure 2-48. Port J Interrupt Flag Register (PIFJ)

[1] Read: Anytime
Write: Anytime, write 1 to clear

Table 2-74. PIFJ Register Field Descriptions

Field	Description
7-0 PIFJ	**Port J interrupt flag**— This flag asserts after a valid active edge was detected on the related pin (see Section 2.5.4.2, “Pin Interrupts and Wakeup”). This can be a rising or a falling edge based on the state of the polarity select register. An interrupt will occur if the associated interrupt enable bit is set. Writing a logic “1” to the corresponding bit field clears the flag. 1 Active edge on the associated bit has occurred 0 No active edge occurred

2.4.3.49 Port AD Data Register (PT0AD)

Address 0x0270 (G1, G2) Access: User read/write[1]

	7	6	5	4	3	2	1	0
R W	PT0AD7	PT0AD6	PT0AD5	PT0AD4	PT0AD3	PT0AD2	PT0AD1	PT0AD0
Reset	0	0	0	0	0	0	0	0

Address 0x0270 (G3) Access: User read/write[1]

	7	6	5	4	3	2	1	0
R	0	0	0	0	PT0AD3	PT0AD2	PT0AD1	PT0AD0
W								
Reset	0	0	0	0	0	0	0	0

Figure 2-49. Port AD Data Register (PT0AD)

1 Read: Anytime. The data source is depending on the data direction value.
Write: Anytime

Table 2-75. PT0AD Register Field Descriptions

Field	Description
7-0 PT0AD	**Port AD general-purpose input/output data**—Data Register When not used with an alternative signal, the associated pin can be used as general-purpose I/O. In general-purpose output mode the port data register bit value is driven to the pin. If the associated data direction bit is set to 1, a read returns the value of the port data register bit, otherwise the buffered pin input state is read if the digital input buffers are enabled (Section 2.3.12, “Pins AD15-0”).

2.4.3.50 Port AD Data Register (PT1AD)

Address 0x0271 Access: User read/write[1]

	7	6	5	4	3	2	1	0
R W	PT1AD7	PT1AD6	PT1AD5	PT1AD4	PT1AD3	PT1AD2	PT1AD1	PT1AD0
Reset	0	0	0	0	0	0	0	0

Figure 2-50. Port AD Data Register (PT1AD)

1 Read: Anytime. The data source is depending on the data direction value.
Write: Anytime

Table 2-76. PT1AD Register Field Descriptions

Field	Description
7-0 PT1AD	**Port AD general-purpose input/output data**—Data Register When not used with an alternative signal, the associated pin can be used as general-purpose I/O. In general-purpose output mode the port data register bit value is driven to the pin. If the associated data direction bit is set to 1, a read returns the value of the port data register bit, otherwise the buffered pin input state is read if the digital input buffers are enabled (Section 2.3.12, “Pins AD15-0”).

2.4.3.51 Port AD Input Register (PTI0AD)

Address 0x0272 (G1, G2) Access: User read only[1]

	7	6	5	4	3	2	1	0
R	PTI0AD7	PTI0AD6	PTI0AD5	PTI0AD4	PTI0AD3	PTI0AD2	PTI0AD1	PTI0AD0
W								
Reset	0	0	0	0	0	0	0	0

Address 0x0272 (G3) Access: User read only[1]

	7	6	5	4	3	2	1	0
R	0	0	0	0	PTI0AD3	PTI0AD2	PTI0AD1	PTI0AD0
W								
Reset	0	0	0	0	0	0	0	0

Figure 2-51. Port AD Input Register (PTI0AD)

[1] Read: Anytime
Write: Never

Table 2-77. PTI0AD Register Field Descriptions

Field	Description
7-0 PTI0AD	**Port AD input data**— A read always returns the buffered input state of the associated pin. It can be used to detect overload or short circuit conditions on output pins.

2.4.3.52 Port AD Input Register (PTI1AD)

Address 0x0273 Access: User read only[1]

	7	6	5	4	3	2	1	0
R	PTI1AD7	PTI1AD6	PTI1AD5	PTI1AD4	PTI1AD3	PTI1AD2	PTI1AD1	PTI1AD0
W								
Reset	0	0	0	0	0	0	0	0

Figure 2-52. Port AD Input Register (PTI1AD)

[1] Read: Anytime
Write: Never

Table 2-78. PTI1AD Register Field Descriptions

Field	Description
7-0 PTI1AD	**Port AD input data**— A read always returns the buffered input state of the associated pin. It can be used to detect overload or short circuit conditions on output pins.

2.4.3.53 Port AD Data Direction Register (DDR0AD)

Address 0x0274 (G1, G2) Access: User read/write[1]

	7	6	5	4	3	2	1	0
R W	DDR0AD7	DDR0AD6	DDR0AD5	DDR0AD4	DDR0AD3	DDR0AD2	DDR0AD1	DDR0AD0
Reset	0	0	0	0	0	0	0	0

Address 0x0274 (G3) Access: User read/write[1]

	7	6	5	4	3	2	1	0
R	0	0	0	0	DDR0AD3	DDR0AD2	DDR0AD1	DDR0AD0
W								
Reset	0	0	0	0	0	0	0	0

Figure 2-53. Port AD Data Direction Register (DDR0AD)

[1] Read: Anytime
Write: Anytime

Table 2-79. DDR0AD Register Field Descriptions

Field	Description
7-0 DDR0AD	**Port AD data direction**— This bit determines whether the associated pin is an input or output. 1 Associated pin configured as output 0 Associated pin configured as input

2.4.3.54 Port AD Data Direction Register (DDR1AD)

Address 0x0275 Access: User read/write[1]

	7	6	5	4	3	2	1	0
R W	DDR1AD7	DDR1AD6	DDR1AD5	DDR1AD4	DDR1AD3	DDR1AD2	DDR1AD1	DDR1AD0
Reset	0	0	0	0	0	0	0	0

Figure 2-54. Port AD Data Direction Register (DDR1AD)

[1] Read: Anytime
Write: Anytime

Table 2-80. DDR1AD Register Field Descriptions

Field	Description
7-0 DDR1AD	**Port AD data direction**— This bit determines whether the associated pin is an input or output. 1 Associated pin configured as output 0 Associated pin configured as input

2.4.3.55 Reserved Register

NOTE

Address 0x0276 is reserved for RVA on G(A)240 and G(A)192 only. Refer to RVA section “RVA Control Register (RVACTL)”.

2.4.3.56 Pin Routing Register 1 (PRR1)

NOTE

Routing takes only effect if PKGCR is set to select the 100 LQFP package.

Address 0x0277 (G(A)240 and G(A)192 only) Access: User read/write[1]

	7	6	5	4	3	2	1	0
R	0	0	0	0	0	0	0	PRR1AN
W								
Reset	0	0	0	0	0	0	0	0

Address 0x0277 (non G(A)240 and G(A)192) Access: User read/write

	7	6	5	4	3	2	1	0
R	0	0	0	0	0	0	0	0
W								
Reset	0	0	0	0	0	0	0	0

Figure 2-55. Pin Routing Register (PRR1)

[1] Read: Anytime
Write: Anytime

Table 2-81. PRR1 Register Field Descriptions

Field	Description
0 PRR1AN	**Pin Routing Register ADC channels** — Select alternative routing for AN15/14/13/11/10 pins to port C This bit programs the routing of the specific ADC channels to alternative external pins in 100 LQFP. See Table 2-82. The routing affects the analog signals and digital input trigger paths to the ADC. Refer to the related pin descriptions in Section 2.3.4, “Pins PC7-0” and Section 2.3.12, “Pins AD15-0”. 1 AN inputs on port C 0 AN inputs on port AD

Table 2-82. AN Routing Options

PRR1AN	Associated Pins
0	AN10 - PAD10 AN11 - PAD11 AN13 - PAD13 AN14 - PAD14 AN15 - PAD15
1	AN10 - PC0 AN11 - PC1 AN13 - PC2 AN14 - PC3 AN15 - PC4

2.4.3.57 Port AD Pull Enable Register (PER0AD)

Address 0x0278 (G1, G2) Access: User read/write[1]

	7	6	5	4	3	2	1	0
R W	PER0AD7	PER0AD6	PER0AD5	PER0AD4	PER0AD3	PER0AD2	PER0AD1	PER0AD0
Reset	0	0	0	0	0	0	0	0

Address 0x0278 (G3) Access: User read/write[1]

	7	6	5	4	3	2	1	0
R	0	0	0	0	PER0AD3	PER0AD2	PER0AD1	PER0AD0
W								
Reset	0	0	0	0	0	0	0	0

Figure 2-56. Port AD Pullup Enable Register (PER0AD)

[1] Read: Anytime
Write: Anytime

Table 2-83. PER0AD Register Field Descriptions

Field	Description
7-0 PER0AD	**Port AD pull enable**—Enable pull device on input pin This bit controls whether a pull device on the associated port input pin is active. If a pin is used as output this bit has no effect. The polarity is selected by the related polarity select register bit. 1 Pull device enabled 0 Pull device disabled

2.4.3.58 Port AD Pull Enable Register (PER1AD)

Address 0x0279 Access: User read/write[1]

	7	6	5	4	3	2	1	0
R W	PER1AD7	PER1AD6	PER1AD5	PER1AD4	PER1AD3	PER1AD2	PER1AD1	PER1AD0
Reset	0	0	0	0	0	0	0	0

Figure 2-57. Port AD Pullup Enable Register (PER1AD)

[1] Read: Anytime
Write: Anytime

Table 2-84. PER1AD Register Field Descriptions

Field	Description
7-0 PER1AD	**Port AD pull enable**—Enable pull device on input pin This bit controls whether a pull device on the associated port input pin is active. If a pin is used as output this bit has no effect. The polarity is selected by the related polarity select register bit. 1 Pull device enabled 0 Pull device disabled

2.4.3.59 Port AD Polarity Select Register (PPS0AD)

Address 0x027A (G1, G2) Access: User read/write[1]

	7	6	5	4	3	2	1	0
R W	PPS0AD7	PPS0AD6	PPS0AD5	PPS0AD4	PPS0AD3	PPS0AD2	PPS0AD1	PPS0AD0
Reset	0	0	0	0	0	0	0	0

Address 0x027A (G3) Access: User read/write[1]

	7	6	5	4	3	2	1	0
R	0	0	0	0	PPS0AD3	PPS0AD2	PPS0AD1	PPS0AD0
W								
Reset	0	0	0	0	0	0	0	0

Figure 2-58. Port AD Polarity Select Register (PPS0AD)

[1] Read: Anytime
Write: Anytime

Table 2-85. PPS0AD Register Field Descriptions

Field	Description
7-0 PPS0AD	**Port AD pull device select**—Configure pull device and pin interrupt edge polarity on input pin This bit selects a pullup or a pulldown device if enabled on the associated port input pin. This bit also selects the polarity of the active pin interrupt edge. 1 Pulldown device selected; rising edge selected 0 Pullup device selected; falling edge selected

2.4.3.60 Port AD Polarity Select Register (PPS1AD)

Address 0x027B Access: User read/write[1]

	7	6	5	4	3	2	1	0
R W	PPS1AD7	PPS1AD6	PPS1AD5	PPS1AD4	PPS1AD3	PPS1AD2	PPS1AD1	PPS1AD0
Reset	0	0	0	0	0	0	0	0

Figure 2-59. Port AD Polarity Select Register (PPS1AD)

[1] Read: Anytime
Write: Anytime

Table 2-86. PPS1AD Register Field Descriptions

Field	Description
7-0 PPS1AD	**Port AD pull device select**—Configure pull device and pin interrupt edge polarity on input pin This bit selects a pullup or a pulldown device if enabled on the associated port input pin. This bit also selects the polarity of the active pin interrupt edge. 1 Pulldown device selected; rising edge selected 0 Pullup device selected; falling edge selected

2.4.3.61 Port AD Interrupt Enable Register (PIE0AD)

Read: Anytime

Address 0x027C (G1, G2) Access: User read/write[1]

	7	6	5	4	3	2	1	0
R W	PIE0AD7	PIE0AD6	PIE0AD5	PIE0AD4	PIE0AD3	PIE0AD2	PIE0AD1	PIE0AD0
Reset	0	0	0	0	0	0	0	0

Address 0x027C (G3) Access: User read/write[1]

	7	6	5	4	3	2	1	0
R	0	0	0	0	PIE0AD3	PIE0AD2	PIE0AD1	PIE0AD0
W								
Reset	0	0	0	0	0	0	0	0

Figure 2-60. Port AD Interrupt Enable Register (PIE0AD)

1 Read: Anytime
Write: Anytime

Table 2-87. PIE0AD Register Field Descriptions

Field	Description
7-0 PIE0AD	**Port AD interrupt enable**— This bit enables or disables the edge sensitive pin interrupt on the associated pin. An interrupt can be generated if the pin is operating in input or output mode when in use with the general-purpose or related peripheral function. 1 Interrupt is enabled 0 Interrupt is disabled (interrupt flag masked)

2.4.3.62 Port AD Interrupt Enable Register (PIE1AD)

Read: Anytime

Address 0x027D Access: User read/write[1]

	7	6	5	4	3	2	1	0
R W	PIE1AD7	PIE1AD6	PIE1AD5	PIE1AD4	PIE1AD3	PIE1AD2	PIE1AD1	PIE1AD0
Reset	0	0	0	0	0	0	0	0

Figure 2-61. Port AD Interrupt Enable Register (PIE1AD)

1 Read: Anytime
Write: Anytime

Table 2-88. PIE1AD Register Field Descriptions

Field	Description
7-0 PIE1AD	**Port AD interrupt enable**— This bit enables or disables the edge sensitive pin interrupt on the associated pin. An interrupt can be generated if the pin is operating in input or output mode when in use with the general-purpose or related peripheral function. 1 Interrupt is enabled 0 Interrupt is disabled (interrupt flag masked)

2.4.3.63 Port AD Interrupt Flag Register (PIF0AD)

Address 0x027E (G1, G2) Access: User read/write[1]

	7	6	5	4	3	2	1	0
R W	PIF0AD7	PIF0AD6	PIF0AD5	PIF0AD4	PIF0AD3	PIF0AD2	PIF0AD1	PIF0AD0
Reset	0	0	0	0	0	0	0	0

Address 0x027E (G3) Access: User read/write[1]

	7	6	5	4	3	2	1	0
R	0	0	0	0	PIF0AD3	PIF0AD2	PIF0AD1	PIF0AD0
W								
Reset	0	0	0	0	0	0	0	0

Figure 2-62. Port AD Interrupt Flag Register (PIF0AD)

[1] Read: Anytime
Write: Anytime, write 1 to clear

Table 2-89. PIF0AD Register Field Descriptions

Field	Description
7-0 PIF0AD	**Port AD interrupt flag**— This flag asserts after a valid active edge was detected on the related pin (see Section 2.5.4.2, “Pin Interrupts and Wakeup”). This can be a rising or a falling edge based on the state of the polarity select register. An interrupt will occur if the associated interrupt enable bit is set. Writing a logic “1” to the corresponding bit field clears the flag. 1 Active edge on the associated bit has occurred 0 No active edge occurred

2.4.3.64 Port AD Interrupt Flag Register (PIF1AD)

Address 0x027F Access: User read/write[1]

	7	6	5	4	3	2	1	0
R W	PIF1AD7	PIF1AD6	PIF1AD5	PIF1AD4	PIF1AD3	PIF1AD2	PIF1AD1	PIF1AD0
Reset	0	0	0	0	0	0	0	0

Figure 2-63. Port AD Interrupt Flag Register (PIF1AD)

[1] Read: Anytime
Write: Anytime

Table 2-90. PIF1AD Register Field Descriptions

Field	Description
7-0 PIF1AD	**Port AD interrupt flag**— This flag asserts after a valid active edge was detected on the related pin (see Section 2.5.4.2, “Pin Interrupts and Wakeup”). This can be a rising or a falling edge based on the state of the polarity select register. An interrupt will occur if the associated interrupt enable bit is set. Writing a logic “1” to the corresponding bit field clears the flag. 1 Active edge on the associated bit has occurred 0 No active edge occurred

2.5 PIM Ports - Functional Description

2.5.1 General

Each pin except BKGD can act as general-purpose I/O. In addition most pins can act as an output or input of a peripheral module.

2.5.2 Registers

A set of configuration registers is common to all ports with exception of the ADC port (Table 2-91). All registers can be written at any time, however a specific configuration might not become active.

Example: Selecting a pullup device. This device does not become active while the port is used as a push-pull output.

Table 2-91. Register availability per port[1]

Port	Data (Portx, PTx)	Input (PTIx)	Data Direction (DDRx)	Pull Enable (PERx)	Polarity Select (PPSx)	Wired-Or Mode (WOMx)	Interrupt Enable (PIEx)	Interrupt Flag (PIFx)
A	yes	-	yes	yes	-	-	-	-
B	yes	-	yes		-	-	-	-
C	yes	-	yes		-	-	-	-
D	yes	-	yes		-	-	-	-
E	yes	-	yes		-	-	-	-
T	yes	yes	yes	yes	yes	-	-	-
S	yes	yes	yes	yes	yes	yes	-	-
M	yes	yes	yes	yes	yes	yes	-	-
P	yes	yes	yes	yes	yes	-	yes	yes
J	yes	yes	yes	yes	yes	-	yes	yes
AD	yes	yes	yes	yes	yes	-	yes	yes

[1] Each cell represents one register with individual configuration bits

2.5.2.1 Data Register (PORTx, PTx)

This register holds the value driven out to the pin if the pin is used as a general-purpose I/O.

Writing to this register has only an effect on the pin if the pin is used as general-purpose output. When reading this address, the buffered state of the pin is returned if the associated data direction register bit is set to 0.

If the data direction register bits are set to 1, the contents of the data register is returned. This is independent of any other configuration (Figure 2-64).

2.5.2.2 Input Register (PTIx)

This register is read-only and always returns the buffered state of the pin (Figure 2-64).

2.5.2.3 Data Direction Register (DDRx)

This register defines whether the pin is used as an general-purpose input or an output.

If a peripheral module controls the pin the contents of the data direction register is ignored (Figure 2-64).

Independent of the pin usage with a peripheral module this register determines the source of data when reading the associated data register address (2.5.2.1/2-241).

NOTE

Due to internal synchronization circuits, it can take up to 2 bus clock cycles until the correct value is read on port data or port input registers, when changing the data direction register.

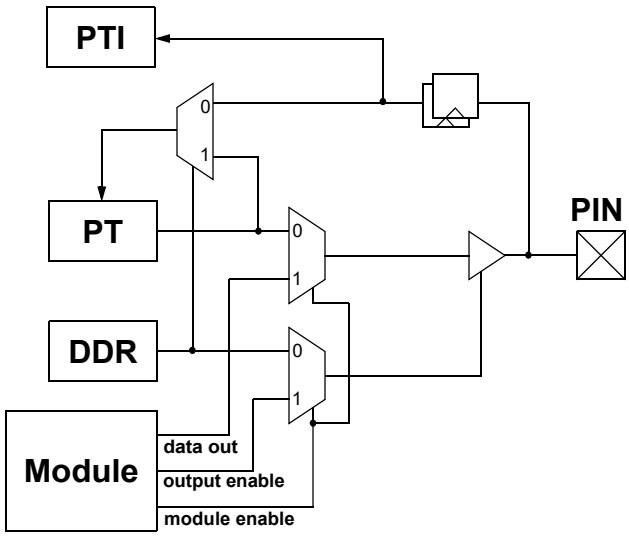

Figure 2-64. Illustration of I/O pin functionality

2.5.2.4 Pull Device Enable Register (PERx)

This register turns on a pullup or pulldown device on the related pins determined by the associated polarity select register (2.5.2.5/2-242).

The pull device becomes active only if the pin is used as an input or as a wired-or output. Some peripheral module only allow certain configurations of pull devices to become active. Refer to Section 2.3, “PIM Routing - Functional description”.

2.5.2.5 Pin Polarity Select Register (PPSx)

This register selects either a pullup or pulldown device if enabled.

It becomes only active if the pin is used as an input. A pullup device can be activated if the pin is used as a wired-or output.

2.5.2.6 Wired-Or Mode Register (WOMx)

If the pin is used as an output this register turns off the active-high drive. This allows wired-or type connections of outputs.

2.5.2.7 Interrupt Enable Register (PIEx)

If the pin is used as an interrupt input this register serves as a mask to the interrupt flag to enable/disable the interrupt.

2.5.2.8 Interrupt Flag Register (PIFx)

If the pin is used as an interrupt input this register holds the interrupt flag after a valid pin event.

2.5.2.9 Pin Routing Register (PRRx)

This register allows software re-configuration of the pinouts for specific peripherals in the 20 TSSOP package only.

2.5.2.10 Package Code Register (PKGCR)

This register determines the package in use. Pre programmed by factory.

2.5.3 Pin Configuration Summary

The following table summarizes the effect of the various configuration bits, that is data direction (DDR), output level (IO), pull enable (PE), pull select (PS) on the pin function and pull device [1].

The configuration bit PS is used for two purposes:

1. Configure the sensitive interrupt edge (rising or falling), if interrupt is enabled.
2. Select either a pullup or pulldown device if PE is active.

1.

Table 2-92. Pin Configuration Summary

DDR	IO	PE	PS[1]	IE[2]	Function	Pull Device	Interrupt
0	x	0	x	0	Input[3]	Disabled	Disabled
0	x	1	0	0	Input[3]	Pullup	Disabled
0	x	1	1	0	Input[3]	Pulldown	Disabled
0	x	0	0	1	Input[3]	Disabled	Falling edge
0	x	0	1	1	Input[3]	Disabled	Rising edge
0	x	1	0	1	Input[3]	Pullup	Falling edge
0	x	1	1	1	Input[3]	Pulldown	Rising edge
1	0	x	x	0	Output, drive to 0	Disabled	Disabled
1	1	x	x	0	Output, drive to 1	Disabled	Disabled
1	0	x	0	1	Output, drive to 0	Disabled	Falling edge
1	1	x	1	1	Output, drive to 1	Disabled	Rising edge

1 Always “0” on port A, B, C, D, BKGD. Always “1” on port E

2 Applicable only on port P, J and AD.

3 Port AD: Assuming digital input buffer enabled in ADC module (ATDDIEN) and ACMP module (ACDIEN)

2.5.4 Interrupts

This section describes the interrupts generated by the PIM and their individual sources. Vector addresses and interrupt priorities are defined at MCU level.

Table 2-93. PIM Interrupt Sources

Module Interrupt Sources	Local Enable
$\overline{\text{XIRQ}}$	None
$\overline{\text{IRQ}}$	IRQCR[IRQEN]
Port P pin interrupt	PIEP[PIEP7-PIEP0]
Port J pin interrupt	PIEJ[PIEJ7-PIEJ0]
Port AD pin interrupt	PIE0AD[PIE0AD7-PIE0AD0] PIE1AD[PIE1AD7-PIE1AD0]

2.5.4.1 XIRQ, IRQ Interrupts

The $\overline{\text{XIRQ}}$ pin allows requesting non-maskable interrupts after reset initialization. During reset, the X bit in the condition code register is set and any interrupts are masked until software enables them.

The $\overline{\text{IRQ}}$ pin allows requesting asynchronous interrupts. The interrupt input is disabled out of reset. To enable the interrupt the IRQCR[IRQEN] bit must be set and the I bit cleared in the condition code register. The interrupt can be configured for level-sensitive or falling-edge-sensitive triggering. If IRQCR[IRQEN] is cleared while an interrupt is pending, the request will deassert.

Both interrupts are capable to wake-up the device from stop mode. Means for glitch filtering are not provided on these pins.

2.5.4.2 Pin Interrupts and Wakeup

Ports P, J and AD offer pin interrupt capability. The related interrupt enable (PIE) as well as the sensitivity to rising or falling edges (PPS) can be individually configured on per-pin basis. All bits/pins in a port share the same interrupt vector. Interrupts can be used with the pins configured as inputs or outputs.

An interrupt is generated when a port interrupt flag (PIF) and its corresponding port interrupt enable (PIE) are both set. The pin interrupt feature is also capable to wake up the CPU when it is in stop or wait mode.

A digital filter on each pin prevents short pulses from generating an interrupt. A valid edge on an input is detected if 4 consecutive samples of a passive level are followed by 4 consecutive samples of an active level. Else the sampling logic is restarted.

In run and wait mode the filters are continuously clocked by the bus clock. Pulses with a duration of $t_{PULSE} < n_{P_MASK}/f_{bus}$ are assuredly filtered out while pulses with a duration of $t_{PULSE} > n_{P_PASS}/f_{bus}$ guarantee a pin interrupt.

In stop mode the clock is generated by an RC-oscillator. The minimum pulse length varies over process conditions, temperature and voltage (Figure 2-65). Pulses with a duration of $t_{PULSE} < t_{P_MASK}$ are assuredly filtered out while pulses with a duration of $t_{PULSE} > t_{P_PASS}$ guarantee a wakeup event.

Please refer to the appendix table “Pin Interrupt Characteristics” for pulse length limits.

To maximize current saving the RC oscillator is active only if the following condition is true on any individual pin:

Sample count <= 4 (at active or passive level) and interrupt enabled (PIE=1) and interrupt flag not set (PIF=0).

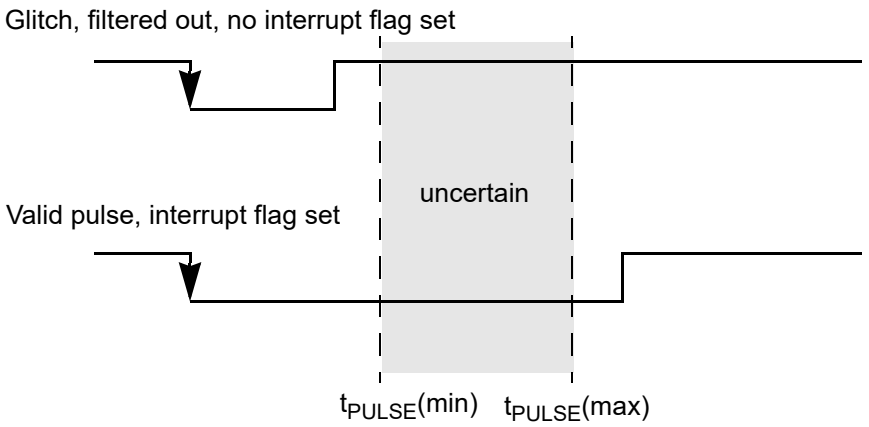

Figure 2-65. Interrupt Glitch Filter (here: active low level selected)

2.6 Initialization/Application Information

2.6.1 Initialization

After a system reset, software should:

1. Read the PKGCR and write to it with its preset content to engage the write lock on PKGCR[PKGCR2:PKGCR0] bits protecting the device from inadvertent changes to the pin layout in normal applications.
2. Write to PRR0 in 20 TSSOP to define the module routing and to PKGCR[APICLKS7] bit in any package for API_EXTCLK.

GA240 / GA192 devices only:

3. In applications using the analog functions on port C pins shared with AMPM1, AMPP1 or DACU1 the input buffers should be disabled early after reset by enabling the related mode of the DAC1 module. This shortens the time of potentially increased power consumption caused by the digital input buffers operating in the linear region.

2.6.2 Port Data and Data Direction Register writes

It is not recommended to write PORTx/PTx and DDRx in a word access. When changing the register pins from inputs to outputs, the data may have extra transitions during the write access. Initialize the port data register before enabling the outputs.

2.6.3 Enabling IRQ edge-sensitive mode

To avoid unintended IRQ interrupts resulting from writing to IRQCR while the IRQ pin is driven to active level ($\overline{IRQ}$=0) the following initialization sequence is recommended:

1. Mask I-bit
2. Set IRQCR[IRQEN]
3. Set IRQCR[IRQE]
4. Clear I-bit

2.6.4 ADC External Triggers ETRIG3-0

The ADC external trigger inputs ETRIG3-0 allow the synchronization of conversions to external trigger events if selected as trigger source (for details refer to ATDCTL1[ETRIGSEL] and ATDCTL1[ETRIGCH] configuration bits in ADC section). These signals are related to PWM channels 3-0 to support periodic trigger applications with the ADC. Other pin functions can also be used as triggers.

If a PWM channel is routed to an alternative pin, the ETRIG input function will follow the relocation accordingly.

If the related PWM channel is enabled, the PWM signal as seen on the pin will drive the ETRIG input. If another signal of higher priority takes control of the pin or if on a port AD pin the input buffer is disabled,

the ETRIG will be driven by the PWM internally. If the related PWM channel is not enabled, the ETRIG function will be triggered by other functions on the pin including general-purpose input.

Table 2-94 illustrates the resulting trigger sources and their dependencies. Shaded fields apply to 20 TSSOP with shared ACMP analog input functions on port AD pins only.

Table 2-94. ETRIG Sources

Port AD Input Buffer Enable[1]	PWM Enable	Peripheral Enable[2]	ETRIG Source	Comment
0	0	0	Const. 1	Forced High
0	0	1	Const. 1	Forced High
0	1	0	PWM	Internal Link
0	1	1	PWM	Internal Link
1	0	0	Pin	Driven by General-Purpose Function
1	0	1	Pin	Driven by Peripheral
1	1	0	Pin	Driven by PWM
1	1	1	PWM	Internal Link

1 Refer to NOTE/2-172 for enable condition

2 With higher priority than PWM on pin including ACMP enable (ACMPC[ACE]=1)

2.6.5 Emulation of Smaller Packages

The Package Code Register (PKGCR) allows the emulation of smaller packages to support software development and debugging without need to have the actual target package at hand. Cross-device programming for the shared functions is also supported because smaller package sizes than the given device is offered in can be selected[1].

The PKGCR can be written in normal mode once after reset to overwrite the factory pre-programmed value, which determines the actual package. Further attempts are blocked to avoid inadvertent changes (blocking released in special mode). Trying to select a package larger than the given device is offered in will be ignored and result in the “illegal” code being written.

When a smaller package is selected the pin availability and pin functionality changes according to the target package specification. The input buffers of unused pins are disabled however the output functions of unused pins are not disabled. Therefore these pins should be don’t-cared.

Depending on the different feature sets of the G-family derivatives the input buffers of specific pins, which are shared with analog functions need to be explicitly enabled before they can be used with digital input functions. For example devices featuring an ACMP module contain a control register for the related input buffers, which is not available on other family members. Also larger devices in general feature more ADC channels with individual input buffer enable bits, which are not present on smaller ones. These differences need to be accounted for when developing cross-functional code.

1. Except G(A)128/G(A)96 in 20 TSSOP: Internal routing of PWM to ETRIG is not available.

Chapter 3
5V Analog Comparator (ACMPV1)

Revision History

Rev. No. (Item No.)	Date (Submitted By)	Sections Affected	Substantial Change(s)
V00.08	13 Aug 2010		• Added register name to every bitfield reference
V00.09	10 Sep 2010		• Internal updates •
V01.00	18 Oct 2010		• Initial version •

3.1 Introduction

The analog comparator (ACMP) provides a circuit for comparing two analog input voltages. Refer to the device overview section for availability on a specific device.

3.2 Features

The ACMP has the following features:

- Low offset, low long-term offset drift
- Selectable interrupt on rising, falling, or rising and falling edges of comparator output
- Option to output comparator signal on an external pin ACMPO
- Option to trigger timer input capture events

3.3 Block Diagram

The block diagram of the ACMP is shown below.

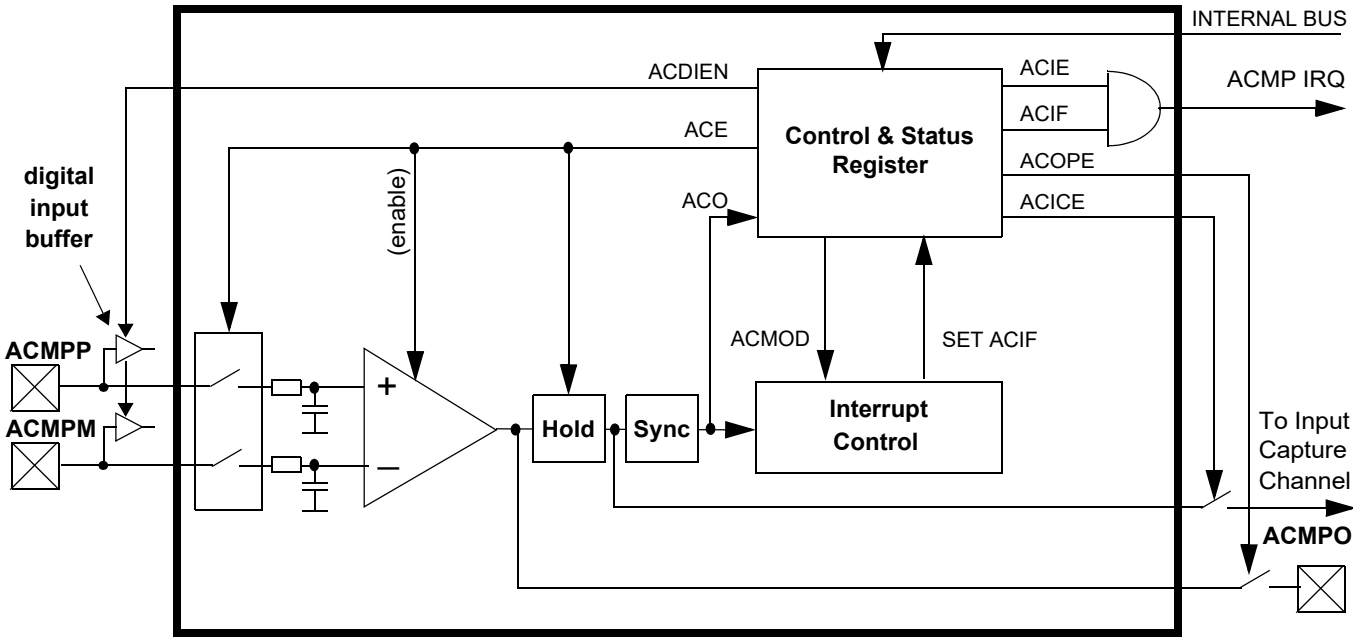

Figure 3-1. ACMP Block Diagram

Figure 3-2.

3.4 External Signals

The ACMP has two analog input signals, ACMPP and ACMPM, and one digital output, ACMPO. The associated pins are defined by the package option.

The ACMPP signal is connected to the non-inverting input of the comparator. The ACMPM signal is connected to the inverting input of the comparator. Each of these signals can accept an input voltage that varies across the full 5V operating voltage range. The module monitors the voltage on these inputs independent of any other functions in use (GPIO, ADC).

The raw comparator output signal can optionally be driven on an external pin.

3.5 Modes of Operation

1. Normal Mode
   The ACMP is operating when enabled and not in STOP mode.
2. Shutdown Mode
   The ACMP is held in shutdown mode either when disabled or during STOP mode. In this case the supply of the analog block is disconnected for power saving. ACMPO drives zero in shutdown mode.

3.6 Memory Map and Register Definition

3.6.1 Register Map

Table 3-1 shows the ACMP register map.

Table 3-1. ACMP Register Map

Global Address Register Name		Bit 7	6	5	4	3	2	1	Bit 0
0x0260 ACMPC	R	ACIE	ACOPE	ACICE	ACDIEN	ACMOD1	ACMOD0	0	ACE
	W								
0x0261 ACMPS	R	ACIF	ACO	0	0	0	0	0	0
	W								

= Unimplemented or Reserved

3.6.2 Register Descriptions

3.6.2.1 ACMP Control Register (ACMPC)

Address 0x0260 Access: User read/write[1]

	7	6	5	4	3	2	1	0
R	ACIE	ACOPE	ACICE	ACDIEN	ACMOD1	ACMOD0	0	ACE
W								
Reset	0	0	0	0	0	0	0	0

Figure 3-3. ACMP Control Register (ACMPC)

[1] Read: Anytime
Write: Anytime

Table 3-2. ACMPC Register Field Descriptions

Field	Description
7 ACIE	ACMP Interrupt Enable— Enables the ACMP interrupt. 0 Interrupt disabled 1 Interrupt enabled
6 ACOPE	ACMP Output Pin Enable— Enables raw comparator output on external ACMPO pin. 0 ACMP output not available 1 ACMP output is driven out on ACMPO

Table 3-2. ACMPC Register Field Descriptions (continued)

Field	Description
5 ACICE	ACMP Input Capture Enable— Establishes internal link to a timer input capture channel. When enabled, the associated timer pin is disconnected from the timer input. Refer to ACE description to account for initialization delay on this path. 0 Timer link disabled 1 ACMP output connected to input capture channel 5
4 ACDIEN	ACMP Digital Input Buffer Enable— Enables the input buffers on ACMPP and ACMPM for the pins to be used with digital functions. **Note:** If this bit is set while simultaneously using the pin as an analog port, there is potentially increased power consumption because the digital input buffer may be in the linear region. 0 Input buffers disabled on ACMPP and ACMPM 1 Input buffers enabled on ACMPP and ACMPM
3-2 ACMOD [1:0]	ACMP Mode— Selects the type of compare event setting ACIF. 00 Flag setting disabled 01 Comparator output rising edge 10 Comparator output falling edge 11 Comparator output rising or falling edge
0 ACE	ACMP Enable— This bit enables the ACMP module and takes it into normal mode (see Section 3.5, “Modes of Operation”). This bit also connects the related input pins with the module’s low pass input filters. When the module is not enabled, it remains in low power shutdown mode. **Note:** After setting ACE=1 an initialization delay of 63 bus clock cycles must be accounted for. During this time the comparator output path to all subsequent logic (ACO, ACIF, timer link, excl. ACMPO) is held at its current state. When resetting ACE to 0 the current state of the comparator will be maintained. 0 ACMP disabled 1 ACMP enabled

3.6.2.2 ACMP Status Register (ACMPS)

Address 0x0261 Access: User read/write[1]

	7	6	5	4	3	2	1	0
R	ACIF	ACO	0	0	0	0	0	0
W								
Reset	0	0	0	0	0	0	0	0

Figure 3-4. ACMP Status Register (ACMPS)

[1] Read: Anytime
Write:
ACIF: Anytime, write 1 to clear
ACO: Never

Table 3-3. ACMPS Register Field Descriptions

Field	Description
7 ACIF	ACMP Interrupt Flag— ACIF is set when a compare event occurs. Compare events are defined by ACMOD[1:0]. Writing a logic “1” to the bit field clears the flag. 0 Compare event has not occurred 1 Compare event has occurred
6 ACO	ACMP Output— Reading ACO returns the current value of the synchronized ACMP output. Refer to ACE description to account for initialization delay on this path.

3.7 Functional Description

The ACMP compares two analog input voltages applied to ACMPM and ACMPP. The comparator output is high when the voltage at the non-inverting input is greater than the voltage at the inverting input, and is low when the non-inverting input voltage is lower than the inverting input voltage.

The ACMP is enabled with register bit ACMPC[ACE]. When ACMPC[ACE] is set, the input pins are connected to low-pass filters. The comparator output is disconnected from the subsequent logic, which is held at its state for 63 bus clock cycles after setting ACMPC[ACE] to “1” to mask potential glitches. This initialization delay must be accounted for before the first comparison result can be expected.

The initial hold state after reset is zero, thus if input voltages are set to result in “true” result ($V_{ACMPP} > V_{ACMPM}$) before the initialization delay has passed, a flag will be set immediately after this.

Similarly the flag will also be set when disabling the ACMP, then re-enabling it with the inputs changing to produce an opposite result to the hold state before the end of the initialization delay.

By setting the ACMPC[ACICE] bit the gated comparator output can be connected to the synchronized timer input capture channel 5 (see Figure 3-1). This feature can be used to generate time stamps and timer interrupts on ACMP events.

The comparator output signal synchronized to the bus clock is used to read the comparator output status (ACMPS[ACO]) and to set the interrupt flag (ACMPS[ACIF]).

The condition causing the interrupt flag (ACMPS[ACIF]) to assert is selected with register bits ACMPC[ACMOD1:ACMOD0]. This includes any edge configuration, that is rising, or falling, or rising and falling (toggle) edges of the comparator output. Also flag setting can be disabled.

An interrupt will be generated if the interrupt enable bit (ACMPC[ACIE]) and the interrupt flag (ACMPS[ACIF]) are both set. ACMPS[ACIF] is cleared by writing a 1.

The raw comparator output signal ACMPO can be driven out on an external pin by setting the ACMPC[ACOPE] bit.

Chapter 4
Reference Voltage Attenuator (RVAV1)

Revision History

Rev. No. (Item No.)	Date (Submitted By)	Sections Affected	Substantial Change(s)
V00.05	09 Jun 2010		• Added appendix title in note to reference reduced ADC clock • Orthographical corrections aligned to Freescale Publications Style Guide
V00.06	01 Jul 2010		• Aligned to S12 register guidelines
V01.00	18 Oct 2010		• Initial version

4.1 Introduction

The reference voltage attenuator (RVA) provides a circuit for reduction of the ADC reference voltage difference VRH-VSSA to gain more ADC resolution.

4.2 Features

The RVA has the following features:

- Attenuation of ADC reference voltage with low long-term drift

4.3 Block Diagram

The block diagram of the RVA module is shown below.

Refer to device overview section “ADC VRH/VRL Signal Connection” for connection of RVA to pins and ADC module.

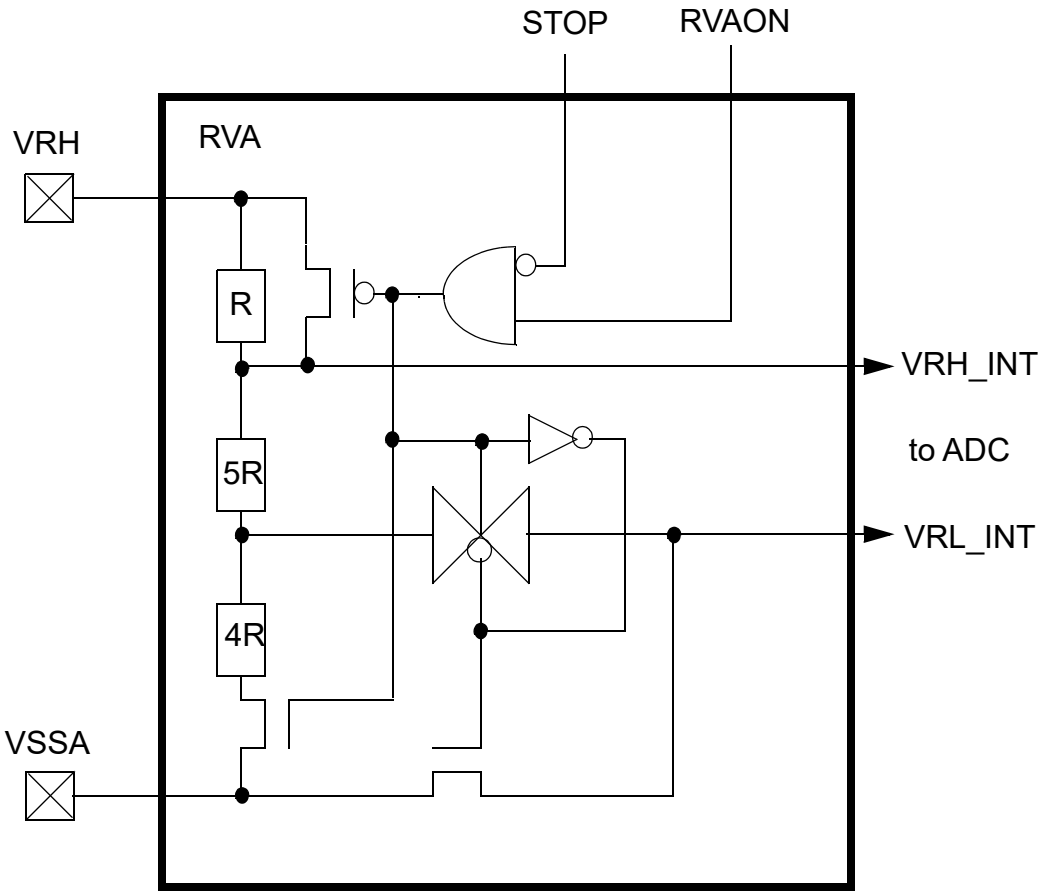

Figure 4-1. RVA Module Block Diagram

4.4 External Signals

The RVA has two external input signals, VRH and VSSA.

4.5 Modes of Operation

1. Attenuation Mode
   The RVA is attenuating the reference voltage when enabled by the register control bit and the MCU not being in STOP mode.
2. Bypass Mode
   The RVA is in bypass mode either when disabled or during STOP mode. In these cases the resistor ladder of the RVA is disconnected for power saving.

4.6 Memory Map and Register Definition

4.6.1 Register Map

Table 4-1 shows the RVA register map.

Table 4-1. RVA Register Map

Global Address Register Name		Bit 7	6	5	4	3	2	1	Bit 0
0x0276 RVACTL	R	0	0	0	0	0	0	0	RVAON
	W								

= Unimplemented or Reserved

4.6.2 Register Descriptions

4.6.2.1 RVA Control Register (RVACTL)

Address 0x0276 Access: User read/write[1]

	7	6	5	4	3	2	1	0
R	0	0	0	0	0	0	0	RVAON
W								
Reset	0	0	0	0	0	0	0	0

Figure 4-2. RVA Control Register (RVACTL)

[1] Read: Anytime
Write: Anytime

Table 4-2. RVACTL Register Field Descriptions

Field	Description
0 RVAON	RVA On — This bit turns on the reference voltage attenuation. 0 RVA in bypass mode 1 RVA in attenuation mode

4.7 Functional Description

The RVA is a prescaler for the ADC reference voltage. If the attenuation is turned off the resistive divider is disconnected from VSSA, VRH_INT is connected to VRH and VRL_INT is connected to VSSA. In this mode the attenuation is bypassed and the resistive divider does not draw current.

If the attenuation is turned on the resistive divider is connected to VSSA, VRH_INT and VRL_INT are connected to intermediate voltage levels:

$$VRH_INT = 0.9 * (VRH - VSSA) + VSSA \qquad \textit{Eqn. 4-1}$$

$$VRL_INT = 0.4 * (VRH - VSSA) + VSSA \qquad \textit{Eqn. 4-2}$$

The attenuated reference voltage difference (VRH_INT - VRL_INT) equals 50% of the input reference voltage difference (VRH - VSSA). With reference voltage attenuation the resolution of the ADC is improved by a factor of 2.

NOTE

In attenuation mode the maximum ADC clock is reduced. Please refer to the conditions in appendix A “ATD Accuracy”, table “ATD Conversion Performance 5V range, RVA enabled”.

Chapter 5
S12G Memory Map Controller (S12GMMCV1)

Table 5-1. Revision History Table

Rev. No. (Item No.)	Date (Submitted By)	Sections Affected	Substantial Change(s)
01.02	20-May 2010		Updates for S12VR48 and S12VR64

5.1 Introduction

The S12GMMC module controls the access to all internal memories and peripherals for the CPU12 and S12SBDM module. It regulates access priorities and determines the address mapping of the on-chip resources. Figure 5-1 shows a block diagram of the S12GMMC module.

5.1.1 Glossary

Table 5-2. Glossary Of Terms

Term	Definition
Local Addresses	Address within the CPU12's Local Address Map (Figure 5-11)
Global Address	Address within the Global Address Map (Figure 5-11)
Aligned Bus Access	Bus access to an even address.
Misaligned Bus Access	Bus access to an odd address.
NS	Normal Single-Chip Mode
SS	Special Single-Chip Mode
Unimplemented Address Ranges	Address ranges which are not mapped to any on-chip resource.
NVM	Non-volatile Memory; Flash or EEPROM
IFR	NVM Information Row. Refer to FTMRG Block Guide

5.1.2 Overview

The S12GMMC connects the CPU12's and the S12SBDM's bus interfaces to the MCU's on-chip resources (memories and peripherals). It arbitrates the bus accesses and determines all of the MCU's memory maps. Furthermore, the S12GMMC is responsible for constraining memory accesses on secured devices and for selecting the MCU's functional mode.

5.1.3 Features

The main features of this block are:

- Paging capability to support a global 256 KByte memory address space
- Bus arbitration between the masters CPU12, S12SBDM to different resources.
- MCU operation mode control
- MCU security control
- Generation of system reset when CPU12 accesses an unimplemented address (i.e., an address which does not belong to any of the on-chip modules) in single-chip modes

5.1.4 Modes of Operation

The S12GMMC selects the MCU's functional mode. It also determines the devices behavior in secured and unsecured state.

5.1.4.1 Functional Modes

Two functional modes are implemented on devices of the S12G product family:

- Normal Single Chip (NS)
  The mode used for running applications.
- Special Single Chip Mode (SS)
  A debug mode which causes the device to enter BDM Active Mode after each reset. Peripherals may also provide special debug features in this mode.

5.1.4.2 Security

S12G devices can be secured to prohibit external access to the on-chip flash. The S12GMMC module determines the access permissions to the on-chip memories in secured and unsecured state.

5.1.5 Block Diagram

Figure 5-1 shows a block diagram of the S12GMMC.

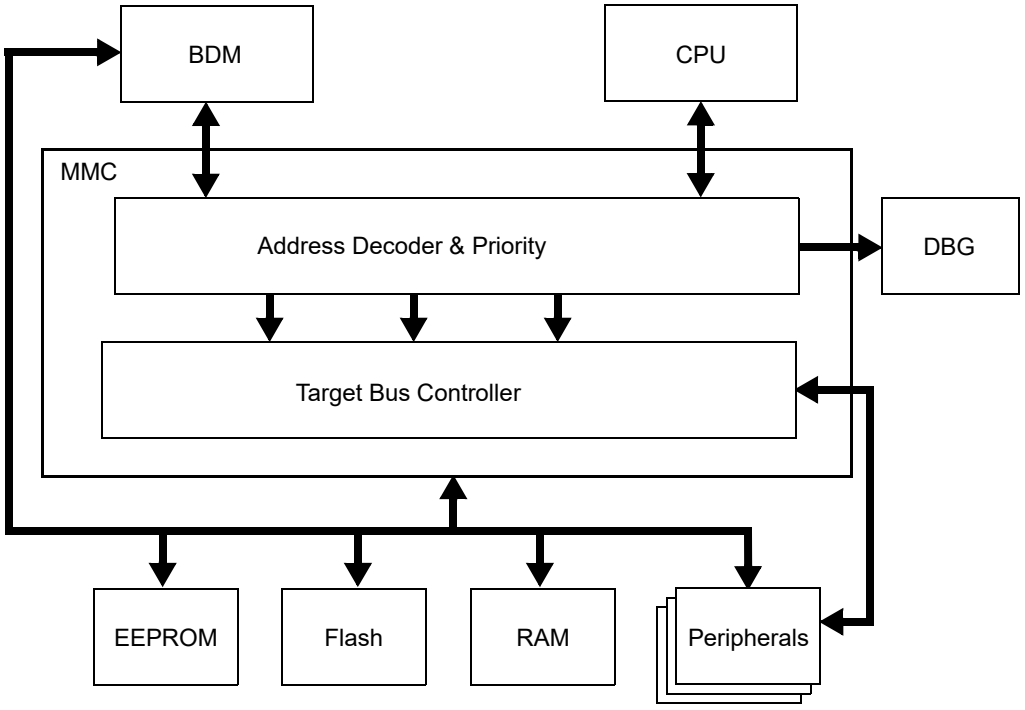

Figure 5-1. S12GMMC Block Diagram

5.2 External Signal Description

The S12GMMC uses two external pins to determine the devices operating mode: RESET and MODC (Figure 5-3) See Device User Guide (DUG) for the mapping of these signals to device pins.

Table 5-3. External System Pins Associated With S12GMMC

Pin Name	Pin Functions	Description
$\overline{\text{RESET}}$ (See Section Device Overview)	$\overline{\text{RESET}}$	The $\overline{\text{RESET}}$ pin is used the select the MCU's operating mode.
$\overline{\text{MODC}}$ (See Section Device Overview)	MODC	The MODC pin is captured at the rising edge of the $\overline{\text{RESET}}$ pin. The captured value determines the MCU's operating mode.

5.3 Memory Map and Registers

5.3.1 Module Memory Map

A summary of the registers associated with the S12GMMC block is shown in Figure 5-2. Detailed descriptions of the registers and bits are given in the subsections that follow.

Address	Register Name		Bit 7	6	5	4	3	2	1	Bit 0
0x000A	Reserved	R	0	0	0	0	0	0	0	0
		W								
0x000B	MODE	R	MODC	0	0	0	0	0	0	0
		W								
0x0010	Reserved	R	0	0	0	0	0	0	0	0
		W								
0x0011	DIRECT	R	DP15	DP14	DP13	DP12	DP11	DP10	DP9	DP8
		W								
0x0012	Reserved	R	0	0	0	0	0	0	0	0
		W								
0x0013	MMCCTL1	R	0	0	0	0	0	0	0	NVMRES
		W								
0x0014	Reserved	R	0	0	0	0	0	0	0	0
		W								
0x0015	PPAGE	R	0	0	0	0	PIX3	PIX2	PIX1	PIX0
		W								
0x0016-0x0017	Reserved	R	0	0	0	0	0	0	0	0
		W								

= Unimplemented or Reserved

Figure 5-2. MMC Register Summary

5.3.2 Register Descriptions

This section consists of the S12GMMC control register descriptions in address order.

5.3.2.1 Mode Register (MODE)

Address: 0x000B

	7	6	5	4	3	2	1	0
R	MODC	0	0	0	0	0	0	0
W								
Reset	MODC[1]	0	0	0	0	0	0	0

1. External signal (see Table 5-3).

= Unimplemented or Reserved

Figure 5-3. Mode Register (MODE)

Read: Anytime.

Write: Only if a transition is allowed (see Figure 5-4).

The MODC bit of the MODE register is used to select the MCU's operating mode.

Table 5-4. MODE Field Descriptions

Field	Description
7 MODC	**Mode Select Bit** — This bit controls the current operating mode during $\overline{\text{RESET}}$ high (inactive). The external mode pin MODC determines the operating mode during $\overline{\text{RESET}}$ low (active). The state of the pin is registered into the respective register bit after the $\overline{\text{RESET}}$ signal goes inactive (see Figure 5-4). Write restrictions exist to disallow transitions between certain modes. Figure 5-4 illustrates all allowed mode changes. Attempting non authorized transitions will not change the MODE bit, but it will block further writes to the register bit except in special modes. Write accesses to the MODE register are blocked when the device is secured.

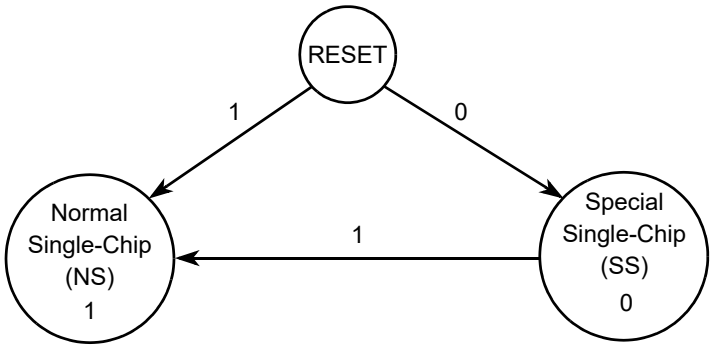

Figure 5-4. Mode Transition Diagram when MCU is Unsecured

5.3.2.2 Direct Page Register (DIRECT)

Address: 0x0011

	7	6	5	4	3	2	1	0
R W	DP15	DP14	DP13	DP12	DP11	DP10	DP9	DP8
Reset	0	0	0	0	0	0	0	0

Figure 5-5. Direct Register (DIRECT)

Read: Anytime

Write: anytime in special SS, write-once in NS.

This register determines the position of the 256 Byte direct page within the memory map.It is valid for both global and local mapping scheme.

Table 5-5. DIRECT Field Descriptions

Field	Description
7–0 DP[15:8]	**Direct Page Index Bits 15–8** — These bits are used by the CPU when performing accesses using the direct addressing mode. These register bits form bits [15:8] of the local address (see Figure 5-6).

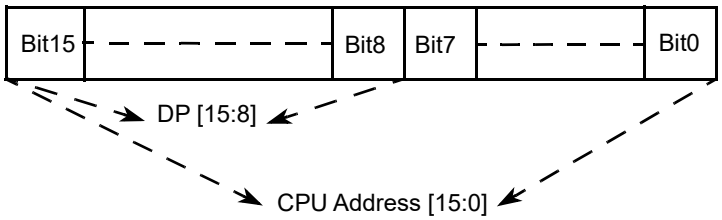

Figure 5-6. DIRECT Address Mapping

Example 5-1. This example demonstrates usage of the Direct Addressing Mode

```
MOVB     #$04,DIRECT      ;Set DIRECT register to 0x04. From this point on, all memory
                          ;accesses using direct addressing mode will be in the local
                          ;address range from 0x0400 to 0x04FF.
LDY      <$12             ;Load the Y index register from 0x0412 (direct access).
```

5.3.2.3 MMC Control Register (MMCCTL1)

Address: 0x0013

	7	6	5	4	3	2	1	0
R	0	0	0	0	0	0	0	NVMRES
W								
Reset	0	0	0	0	0	0	0	0

= Unimplemented or Reserved

Figure 5-7. MMC Control Register (MMCCTL1)

Read: Anytime.

Write: Anytime.

The NVMRES bit maps 16k of internal NVM resources (see Section FTMRG) to the global address space 0x04000 to 0x07FFF.

Table 5-6. MODE Field Descriptions

Field	Description
0 NVMRES	Map internal NVM resources into the global memory map Write: Anytime This bit maps internal NVM resources into the global address space. 0 Program flash is mapped to the global address range from 0x04000 to 0x07FFF. 1 NVM resources are mapped to the global address range from 0x04000 to 0x07FFF.

5.3.2.4 Program Page Index Register (PPAGE)

Address: 0x0015

	7	6	5	4	3	2	1	0
R	0	0	0	0	PIX3	PIX2	PIX1	PIX0
W								
Reset	0	0	0	0	1	1	1	0

Figure 5-8. Program Page Index Register (PPAGE)

Read: Anytime

Write: Anytime

The four index bits of the PPAGE register select a 16K page in the global memory map (Figure 5-11). The selected 16K page is mapped into the paging window ranging from local address 0x8000 to 0xBFFF. Figure 5-9 illustrates the translation from local to global addresses for accesses to the paging window. The CPU has special access to read and write this register directly during execution of CALL and RTC instructions.

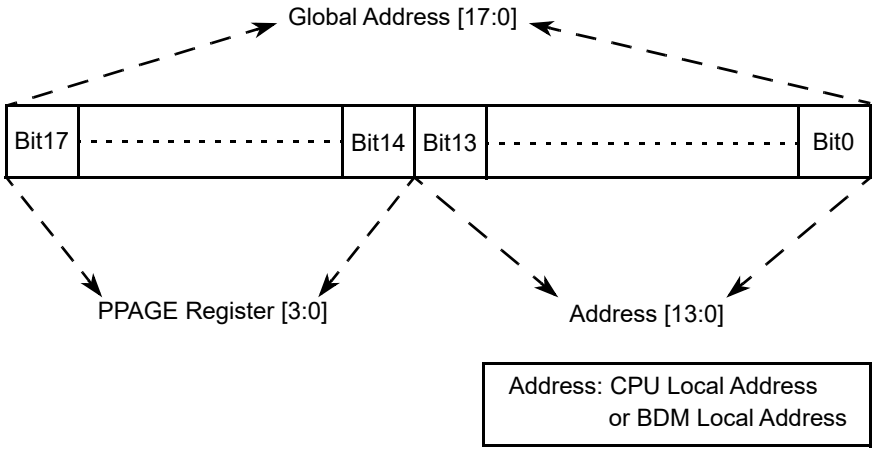

Figure 5-9. PPAGE Address Mapping

NOTE

Writes to this register using the special access of the CALL and RTC instructions will be complete before the end of the instruction execution.

Table 5-7. PPAGE Field Descriptions

Field	Description
3–0 PIX[3:0]	**Program Page Index Bits 3–0** — These page index bits are used to select which of the 256 flash array pages is to be accessed in the Program Page Window.

The fixed 16KB page from 0x0000 to 0x3FFF is the page number 0xC. Parts of this page are covered by Registers, EEPROM and RAM space. See SoC Guide for details.

The fixed 16KB page from 0x4000–0x7FFF is the page number 0xD.

The reset value of 0xE ensures that there is linear Flash space available between addresses 0x0000 and 0xFFFF out of reset.

The fixed 16KB page from 0xC000-0xFFFF is the page number 0xF.

5.4 Functional Description

The S12GMMC block performs several basic functions of the S12G sub-system operation: MCU operation modes, priority control, address mapping, select signal generation and access limitations for the system. Each aspect is described in the following subsections.

5.4.1 MCU Operating Modes

- Normal single chip mode

  This is the operation mode for running application code. There is no external bus in this mode.
- Special single chip mode

  This mode is generally used for debugging operation, boot-strapping or security related operations. The active background debug mode is in control of the CPU code execution and the BDM firmware is waiting for serial commands sent through the BKGD pin.

5.4.2 Memory Map Scheme

5.4.2.1 CPU and BDM Memory Map Scheme

The BDM firmware lookup tables and BDM register memory locations share addresses with other modules; however they are not visible in the memory map during user's code execution. The BDM memory resources are enabled only during the READ_BD and WRITE_BD access cycles to distinguish between accesses to the BDM memory area and accesses to the other modules. (Refer to BDM Block Guide for further details).

When the MCU enters active BDM mode, the BDM firmware lookup tables and the BDM registers become visible in the local memory map in the range 0xFF00-0xFFFF (global address 0x3_FF00 - 0x3_FFFF) and the CPU begins execution of firmware commands or the BDM begins execution of hardware commands. The resources which share memory space with the BDM module will not be visible in the memory map during active BDM mode.

Please note that after the MCU enters active BDM mode the BDM firmware lookup tables and the BDM registers will also be visible between addresses 0xBF00 and 0xBFFF if the PPAGE register contains value of 0x0F.

5.4.2.1.1 Expansion of the Local Address Map

Expansion of the CPU Local Address Map

The program page index register in S12GMMC allows accessing up to 256KB of address space in the global memory map by using the four index bits (PPAGE[3:0]) to page 16x16 KB blocks into the program page window located from address 0x8000 to address 0xBFFF in the local CPU memory map.

The page value for the program page window is stored in the PPAGE register. The value of the PPAGE register can be read or written by normal memory accesses as well as by the CALL and RTC instructions.

Control registers, vector space and parts of the on-chip memories are located in unpaged portions of the 64KB local CPU address space.

The starting address of an interrupt service routine must be located in unpaged memory unless the user is certain that the PPAGE register will be set to the appropriate value when the service routine is called. However an interrupt service routine can call other routines that are in paged memory. The upper 16KB block of the local CPU memory space (0xC000–0xFFFF) is unpaged. It is recommended that all reset and interrupt vectors point to locations in this area or to the other unmapped pages sections of the local CPU memory map.

Expansion of the BDM Local Address Map

PPAGE and BDMPPR register is also used for the expansion of the BDM local address to the global address. These registers can be read and written by the BDM.

The BDM expansion scheme is the same as the CPU expansion scheme.

The four BDMPPR Program Page index bits allow access to the full 256KB address map that can be accessed with 18 address bits.

The BDM program page index register (BDMPPR) is used only when the feature is enabled in BDM and, in the case the CPU is executing a firmware command which uses CPU instructions, or by a BDM hardware commands. See the BDM Block Guide for further details. (see Figure 5-10).

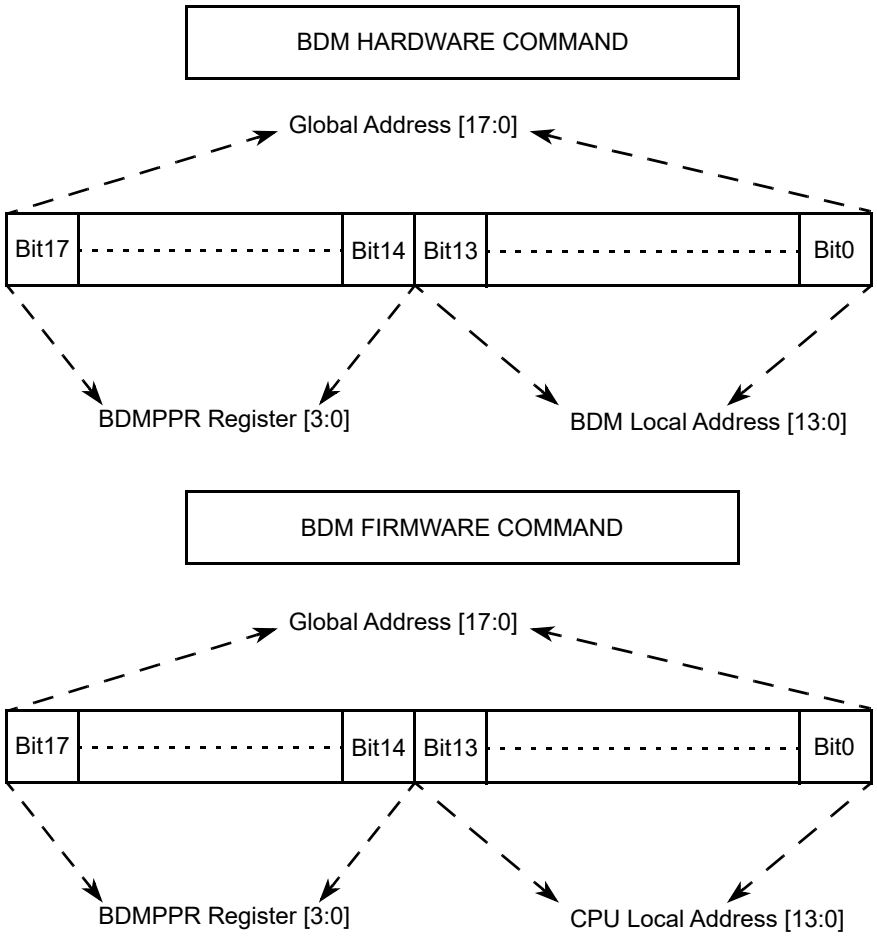
BDM HARDWARE COMMAND
Global Address [17:0]
Bit17
Bit14
Bit13
Bit0
BDMPPR Register [3:0]
BDM Local Address [13:0]
BDM FIRMWARE COMMAND
Global Address [17:0]
Bit17
Bit14
Bit13
Bit0
BDMPPR Register [3:0]
CPU Local Address [13:0]

Figure 5-10.

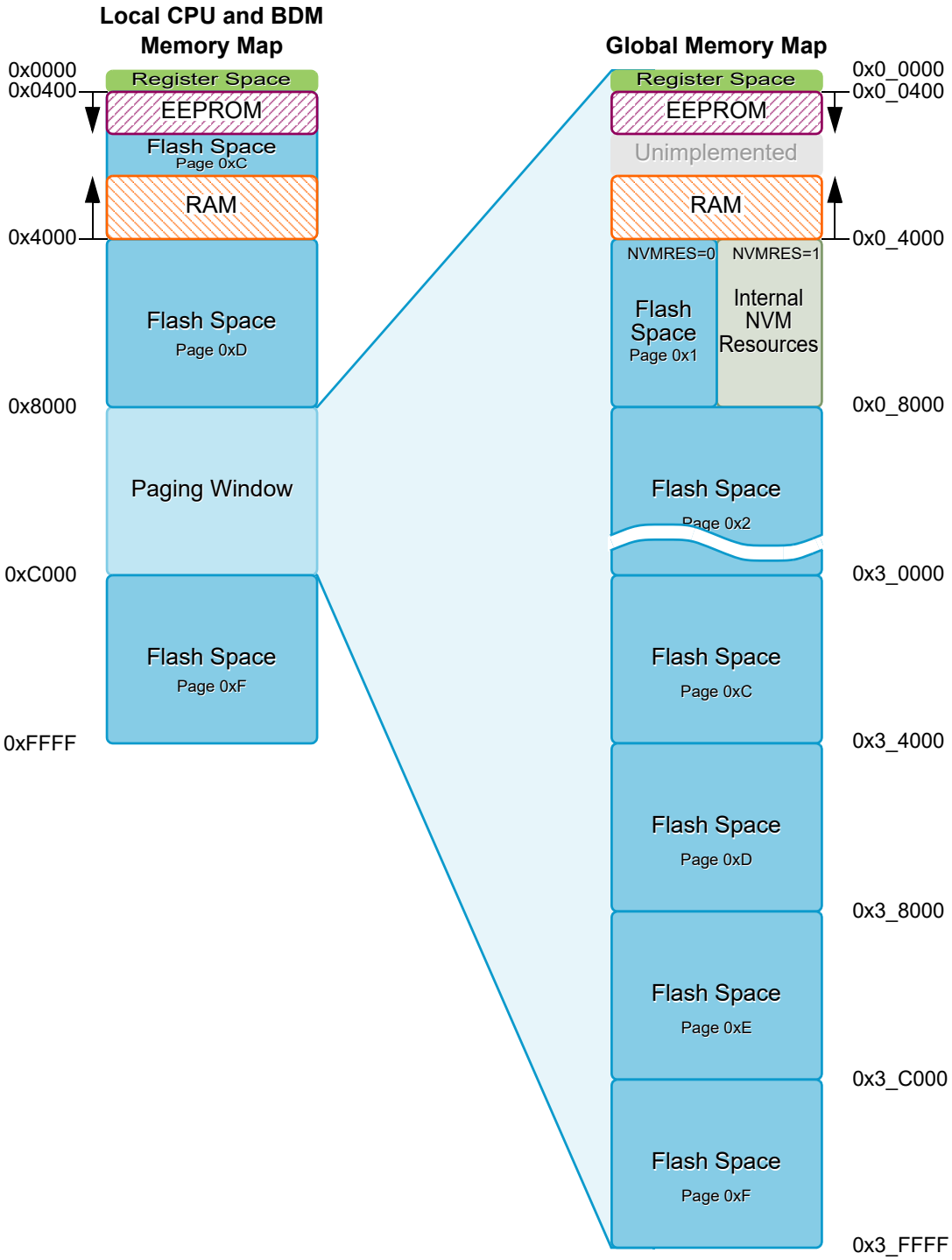

Figure 5-11. Local to Global Address Mapping

5.4.3 Unimplemented and Reserved Address Ranges

The S12GMMC is capable of mapping up 240K of flash, up to 4K of EEPROM and up to 11K of RAM into the global memory map. Smaller devices of the S12G-family do not utilize all of the available address space. Address ranges which are not associated with one of the on-chip memories fall into two categories: Unimplemented addresses and reserved addresses.

Unimplemented addresses are not mapped to any of the on-chip memories. The S12GMMC is aware that accesses to these address location have no destination and triggers a system reset (illegal address reset) whenever they are attempted by the CPU. The BDM is not able to trigger illegal address resets.

Reserved addresses are associated with a memory block on the device, even though the memory block does not contain the resources to fill the address space. The S12GMMC is not aware that the associated memory does not physically exist. It does not trigger an illegal address reset when accesses to reserved locations are attempted.

Table 5-8 shows the global address ranges of all members of the S12G-family.

Table 5-8. Global Address Ranges

	S12GN16	S12GN32	S12G48, S12GN48	S12G64	S12G96	S12G128	S12G192	S12G240
0x00000-0x003FF	Register Space							
0x00400-0x005FF	0.5k	1k	1.5k	2k	3k	4k	4k	4k
0x00600-0x007FF	Reserved	EEPROM						
0x00800-0x009FF	Unimplemented		Reserved	EEPROM				
0x00A00-0x00BFF								
0x00C00-0x00FFF								
0x01000-0x013FF					Reserved	EEPROM		
0x01400-0x01FFF								
0x02000-0x2FFF								
0x03000-0x037FF						RAM		
0x03800-0x03BFF	Reserved	RAM						
0x03C00-0x03FFF	1k	2k	4k	4k	8k	8k	11k	11k

Table 5-8. Global Address Ranges

	S12GN16	S12GN32	S12G48, S12GN48	S12G64	S12G96	S12G128	S12G192	S12G240
0x04000-0x07FFF (NVMRES=1)	Internal NVM Resources (for details refer to section FTMRG)							
0x04000-0x07FFF (NVMRES=0)	Unimplemented						Reserved	
0x08000-0x0FFFF								
0x08000-0x1FFFF								
0x20000-0x27FFF					Reserved			
0x28000-0x2FFFF								
0x30000-0x33FFF			Reserved					
0x34000-0x37FFF						Flash		
0x38000-0x3BFFF	Reserved							
0x3C000-0x3FFFF	16k	32k	48k	64k	96k	128k	192k	240k

5.4.4 Prioritization of Memory Accesses

On S12G devices, the CPU and the BDM are not able to access the memory in parallel. An arbitration occurs whenever both modules attempt a memory access at the same time. CPU accesses are handled with higher priority than BDM accesses unless the BDM module has been stalled for more then 128 bus cycles. In this case the pending BDM access will be processed immediately.

5.4.5 Interrupts

The S12GMMC does not generate any interrupts.

Chapter 6
Interrupt Module (S12SINTV1)

Version Number	Revision Date	Effective Date	Author	Description of Changes
01.02	13 Sep 2007			updates for S12P family devices: - re-added XIRQ and IRQ references since this functionality is used on devices without D2D - added low voltage reset as possible source to the pin reset vector
01.03	21 Nov 2007			added clarification of “Wake-up from STOP or WAIT by XIRQ with X bit set” feature
01.04	20 May 2009			added footnote about availability of “Wake-up from STOP or WAIT by XIRQ with X bit set” feature

6.1 Introduction

The INT module decodes the priority of all system exception requests and provides the applicable vector for processing the exception to the CPU. The INT module supports:

- I bit and X bit maskable interrupt requests
- A non-maskable unimplemented op-code trap
- A non-maskable software interrupt (SWI) or background debug mode request
- Three system reset vector requests
- A spurious interrupt vector

Each of the I bit maskable interrupt requests is assigned to a fixed priority level.

6.1.1 Glossary

Table 6-2 contains terms and abbreviations used in the document.

Table 6-2. Terminology

Term	Meaning
CCR	Condition Code Register (in the CPU)
ISR	Interrupt Service Routine
MCU	Micro-Controller Unit

6.1.2 Features

- Interrupt vector base register (IVBR)
- One spurious interrupt vector (at address vector base[1] + 0x0080).

- 2–58 I bit maskable interrupt vector requests (at addresses vector base + 0x0082–0x00F2).
- I bit maskable interrupts can be nested.
- One X bit maskable interrupt vector request (at address vector base + 0x00F4).
- One non-maskable software interrupt request (SWI) or background debug mode vector request (at address vector base + 0x00F6).
- One non-maskable unimplemented op-code trap (TRAP) vector (at address vector base + 0x00F8).
- Three system reset vectors (at addresses 0xFFFA–0xFFFE).
- Determines the highest priority interrupt vector requests, drives the vector to the bus on CPU request
- Wakes up the system from stop or wait mode when an appropriate interrupt request occurs.

6.1.3 Modes of Operation

- Run mode

  This is the basic mode of operation.
- Wait mode

  In wait mode, the clock to the INT module is disabled. The INT module is however capable of waking-up the CPU from wait mode if an interrupt occurs. Please refer to Section 6.5.3, “Wake Up from Stop or Wait Mode” for details.
- Stop Mode

  In stop mode, the clock to the INT module is disabled. The INT module is however capable of waking-up the CPU from stop mode if an interrupt occurs. Please refer to Section 6.5.3, “Wake Up from Stop or Wait Mode” for details.
- Freeze mode (BDM active)

  In freeze mode (BDM active), the interrupt vector base register is overridden internally. Please refer to Section 6.3.1.1, “Interrupt Vector Base Register (IVBR)” for details.

6.1.4 Block Diagram

Figure 6-1 shows a block diagram of the INT module.

1. The vector base is a 16-bit address which is accumulated from the contents of the interrupt vector base register (IVBR, used as upper byte) and 0x00 (used as lower byte).

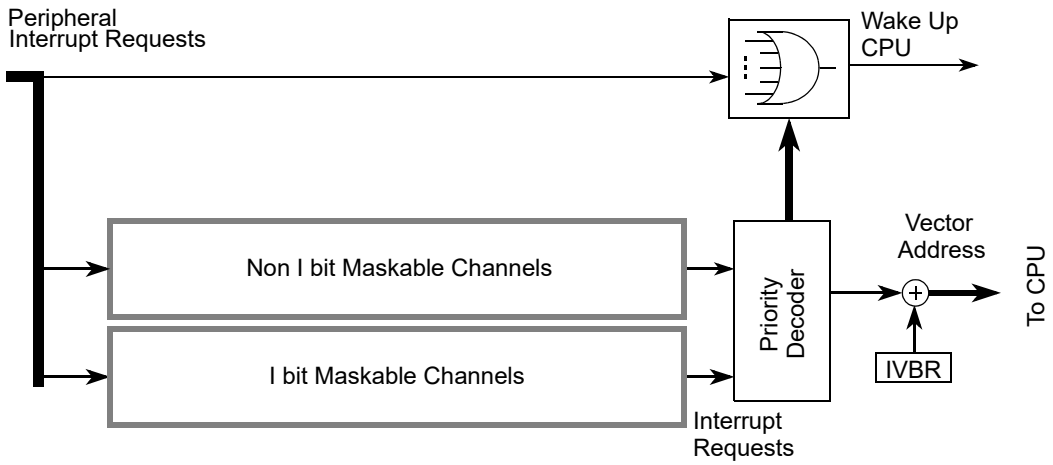

Figure 6-1. INT Block Diagram

6.2 External Signal Description

The INT module has no external signals.

6.3 Memory Map and Register Definition

This section provides a detailed description of all registers accessible in the INT module.

6.3.1 Register Descriptions

This section describes in address order all the INT registers and their individual bits.

6.3.1.1 Interrupt Vector Base Register (IVBR)

Address: 0x0120

	7	6	5	4	3	2	1	0
R W	IVB_ADDR[7:0]							
Reset	1	1	1	1	1	1	1	1

Figure 6-2. Interrupt Vector Base Register (IVBR)

Read: Anytime

Write: Anytime

Table 6-3. IVBR Field Descriptions

Field	Description
7–0 IVB_ADDR[7:0]	**Interrupt Vector Base Address Bits** — These bits represent the upper byte of all vector addresses. Out of reset these bits are set to 0xFF (that means vectors are located at 0xFF80–0xFFFE) to ensure compatibility to HCS12. **Note:** A system reset will initialize the interrupt vector base register with “0xFF” before it is used to determine the reset vector address. Therefore, changing the IVBR has no effect on the location of the three reset vectors (0xFFFA–0xFFFE). **Note:** If the BDM is active (that means the CPU is in the process of executing BDM firmware code), the contents of IVBR are ignored and the upper byte of the vector address is fixed as “0xFF”. This is done to enable handling of all non-maskable interrupts in the BDM firmware.

6.4 Functional Description

The INT module processes all exception requests to be serviced by the CPU module. These exceptions include interrupt vector requests and reset vector requests. Each of these exception types and their overall priority level is discussed in the subsections below.

6.4.1 S12S Exception Requests

The CPU handles both reset requests and interrupt requests. A priority decoder is used to evaluate the priority of pending interrupt requests.

6.4.2 Interrupt Prioritization

The INT module contains a priority decoder to determine the priority for all interrupt requests pending for the CPU. If more than one interrupt request is pending, the interrupt request with the higher vector address wins the prioritization.

The following conditions must be met for an I bit maskable interrupt request to be processed.

1. The local interrupt enabled bit in the peripheral module must be set.
2. The I bit in the condition code register (CCR) of the CPU must be cleared.
3. There is no SWI, TRAP, or X bit maskable request pending.

NOTE

All non I bit maskable interrupt requests always have higher priority than the I bit maskable interrupt requests. If the X bit in the CCR is cleared, it is possible to interrupt an I bit maskable interrupt by an X bit maskable interrupt. It is possible to nest non maskable interrupt requests, for example by nesting SWI or TRAP calls.

Since an interrupt vector is only supplied at the time when the CPU requests it, it is possible that a higher priority interrupt request could override the original interrupt request that caused the CPU to request the vector. In this case, the CPU will receive the highest priority vector and the system will process this interrupt request first, before the original interrupt request is processed.

If the interrupt source is unknown (for example, in the case where an interrupt request becomes inactive after the interrupt has been recognized, but prior to the CPU vector request), the vector address supplied to the CPU will default to that of the spurious interrupt vector.

NOTE

Care must be taken to ensure that all interrupt requests remain active until the system begins execution of the applicable service routine; otherwise, the exception request may not get processed at all or the result may be a spurious interrupt request (vector at address (vector base + 0x0080)).

6.4.3 Reset Exception Requests

The INT module supports three system reset exception request types (please refer to the Clock and Reset generator module for details):

1. Pin reset, power-on reset or illegal address reset, low voltage reset (if applicable)
2. Clock monitor reset request
3. COP watchdog reset request

6.4.4 Exception Priority

The priority (from highest to lowest) and address of all exception vectors issued by the INT module upon request by the CPU is shown in Table 6-4.

Table 6-4. Exception Vector Map and Priority

Vector Address[1]	Source
0xFFFE	Pin reset, power-on reset, illegal address reset, low voltage reset (if applicable)
0xFFFC	Clock monitor reset
0xFFFA	COP watchdog reset
(Vector base + 0x00F8)	Unimplemented opcode trap
(Vector base + 0x00F6)	Software interrupt instruction (SWI) or BDM vector request
(Vector base + 0x00F4)	X bit maskable interrupt request (XIRQ or D2D error interrupt)[2]
(Vector base + 0x00F2)	IRQ or D2D interrupt request[3]
(Vector base + 0x00F0–0x0082)	Device specific I bit maskable interrupt sources (priority determined by the low byte of the vector address, in descending order)
(Vector base + 0x0080)	Spurious interrupt

1 16 bits vector address based

2 D2D error interrupt on MCUs featuring a D2D initiator module, otherwise XIRQ pin interrupt

3 D2D interrupt on MCUs featuring a D2D initiator module, otherwise IRQ pin interrupt

6.5 Initialization/Application Information

6.5.1 Initialization

After system reset, software should:

1. Initialize the interrupt vector base register if the interrupt vector table is not located at the default location (0xFF80–0xFFF9).
2. Enable I bit maskable interrupts by clearing the I bit in the CCR.
3. Enable the X bit maskable interrupt by clearing the X bit in the CCR.

6.5.2 Interrupt Nesting

The interrupt request scheme makes it possible to nest I bit maskable interrupt requests handled by the CPU.

- I bit maskable interrupt requests can be interrupted by an interrupt request with a higher priority.

I bit maskable interrupt requests cannot be interrupted by other I bit maskable interrupt requests per default. In order to make an interrupt service routine (ISR) interruptible, the ISR must explicitly clear the I bit in the CCR (CLI). After clearing the I bit, other I bit maskable interrupt requests can interrupt the current ISR.

An ISR of an interruptible I bit maskable interrupt request could basically look like this:

1. Service interrupt, that is clear interrupt flags, copy data, etc.
2. Clear I bit in the CCR by executing the instruction CLI (thus allowing other I bit maskable interrupt requests)
3. Process data
4. Return from interrupt by executing the instruction RTI

6.5.3 Wake Up from Stop or Wait Mode

6.5.3.1 CPU Wake Up from Stop or Wait Mode

Every I bit maskable interrupt request is capable of waking the MCU from stop or wait mode. To determine whether an I bit maskable interrupts is qualified to wake-up the CPU or not, the same conditions as in normal run mode are applied during stop or wait mode:

- If the I bit in the CCR is set, all I bit maskable interrupts are masked from waking-up the MCU.

Since there are no clocks running in stop mode, only interrupts which can be asserted asynchronously can wake-up the MCU from stop mode.

The X bit maskable interrupt request can wake up the MCU from stop or wait mode at anytime, even if the X bit in CCR is set[1].

1. The capability of the $\overline{\text{XIRQ}}$ pin to wake-up the MCU with the X bit set may not be available if, for example, the $\overline{\text{XIRQ}}$ pin is shared with other peripheral modules on the device. Please refer to the Device section of the MCU reference manual for details.

If the X bit maskable interrupt request is used to wake-up the MCU with the X bit in the CCR set, the associated ISR is not called. The CPU then resumes program execution with the instruction following the WAI or STOP instruction. This features works following the same rules like any interrupt request, that is care must be taken that the X interrupt request used for wake-up remains active at least until the system begins execution of the instruction following the WAI or STOP instruction; otherwise, wake-up may not occur.

Chapter 7
Background Debug Module (S12SBDMV1)

Table 7-1. Revision History

Revision Number	Date	Sections Affected	Summary of Changes
1.03	14.May.2009		Internal Conditional text only
1.04	30.Nov.2009		Internal Conditional text only
1.05	07.Dec.2010		Standardized format of revision history table header.
1.06	02.Mar.2011	7.3.2.2/7-287 7.2/7-283	Corrected BPAE bit description. Removed references to fixed VCO frequencies

7.1 Introduction

This section describes the functionality of the background debug module (BDM) sub-block of the HCS12S core platform.

The background debug module (BDM) sub-block is a single-wire, background debug system implemented in on-chip hardware for minimal CPU intervention. All interfacing with the BDM is done via the BKGD pin.

The BDM has enhanced capability for maintaining synchronization between the target and host while allowing more flexibility in clock rates. This includes a sync signal to determine the communication rate and a handshake signal to indicate when an operation is complete. The system is backwards compatible to the BDM of the S12 family with the following exceptions:

- TAGGO command not supported by S12SBDM
- External instruction tagging feature is part of the DBG module
- S12SBDM register map and register content modified
- Family ID readable from BDM ROM at global address 0x3_FF0F in active BDM (value for devices with HCS12S core is 0xC2)
- Clock switch removed from BDM (CLKSW bit removed from BDMSTS register)

7.1.1 Features

The BDM includes these distinctive features:

- Single-wire communication with host development system
- Enhanced capability for allowing more flexibility in clock rates
- SYNC command to determine communication rate

- GO_UNTIL command
- Hardware handshake protocol to increase the performance of the serial communication
- Active out of reset in special single chip mode
- Nine hardware commands using free cycles, if available, for minimal CPU intervention
- Hardware commands not requiring active BDM
- 14 firmware commands execute from the standard BDM firmware lookup table
- Software control of BDM operation during wait mode
- When secured, hardware commands are allowed to access the register space in special single chip mode, if the Flash erase tests fail.
- Family ID readable from BDM ROM at global address 0x3_FF0F in active BDM (value for devices with HCS12S core is 0xC2)
- BDM hardware commands are operational until system stop mode is entered

7.1.2 Modes of Operation

BDM is available in all operating modes but must be enabled before firmware commands are executed. Some systems may have a control bit that allows suspending the function during background debug mode.

7.1.2.1 Regular Run Modes

All of these operations refer to the part in run mode and not being secured. The BDM does not provide controls to conserve power during run mode.

- Normal modes

  General operation of the BDM is available and operates the same in all normal modes.
- Special single chip mode

  In special single chip mode, background operation is enabled and active out of reset. This allows programming a system with blank memory.

7.1.2.2 Secure Mode Operation

If the device is in secure mode, the operation of the BDM is reduced to a small subset of its regular run mode operation. Secure operation prevents access to Flash other than allowing erasure. For more information please see Section 7.4.1, “Security”.

7.1.2.3 Low-Power Modes

The BDM can be used until stop mode is entered. When CPU is in wait mode all BDM firmware commands as well as the hardware BACKGROUND command cannot be used and are ignored. In this case the CPU can not enter BDM active mode, and only hardware read and write commands are available. Also the CPU can not enter a low power mode (stop or wait) during BDM active mode.

In stop mode the BDM clocks are stopped. When BDM clocks are disabled and stop mode is exited, the BDM clocks will restart and BDM will have a soft reset (clearing the instruction register, any command in progress and disable the ACK function). The BDM is now ready to receive a new command.

7.1.3 Block Diagram

A block diagram of the BDM is shown in Figure 7-1.

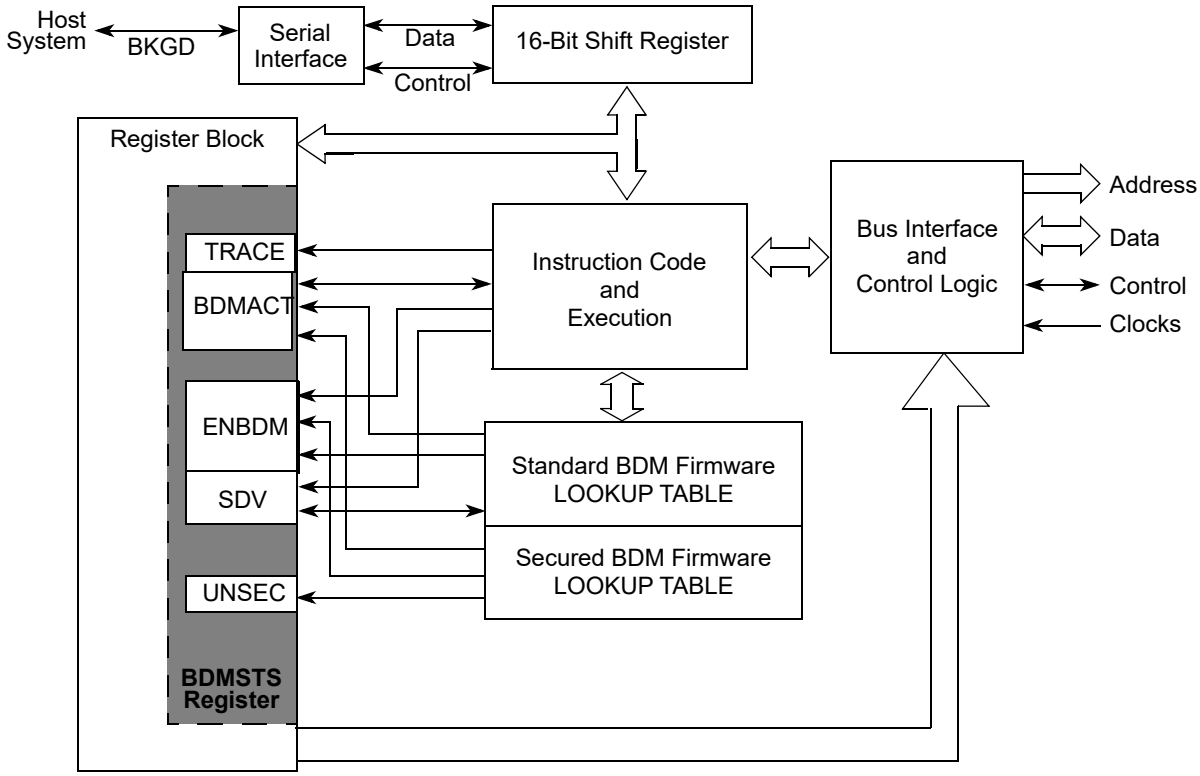

Figure 7-1. BDM Block Diagram

7.2 External Signal Description

A single-wire interface pin called the background debug interface (BKGD) pin is used to communicate with the BDM system. During reset, this pin is a mode select input which selects between normal and special modes of operation. After reset, this pin becomes the dedicated serial interface pin for the background debug mode. The communication rate of this pin is always the BDM clock frequency defined at device level (refer to device overview section). When modifying the VCO clock please make sure that the communication rate is adapted accordingly and a communication time-out (BDM soft reset) has occurred.

7.3 Memory Map and Register Definition

7.3.1 Module Memory Map

Table 7-2 shows the BDM memory map when BDM is active.

Table 7-2. BDM Memory Map

Global Address	Module	Size (Bytes)
0x3_FF00–0x3_FF0B	BDM registers	12
0x3_FF0C–0x3_FF0E	BDM firmware ROM	3
0x3_FF0F	Family ID (part of BDM firmware ROM)	1
0x3_FF10–0x3_FFFF	BDM firmware ROM	240

7.3.2 Register Descriptions

A summary of the registers associated with the BDM is shown in Figure 7-2. Registers are accessed by host-driven communications to the BDM hardware using READ_BD and WRITE_BD commands.

Global Address	Register Name		Bit 7	6	5	4	3	2	1	Bit 0
0x3_FF00	Reserved	R	X	X	X	X	X	X	0	0
		W								
0x3_FF01	BDMSTS	R	ENBDM	BDMACT	0	SDV	TRACE	0	UNSEC	0
		W								
0x3_FF02	Reserved	R	X	X	X	X	X	X	X	X
		W								
0x3_FF03	Reserved	R	X	X	X	X	X	X	X	X
		W								
0x3_FF04	Reserved	R	X	X	X	X	X	X	X	X
		W								
0x3_FF05	Reserved	R	X	X	X	X	X	X	X	X
		W								
0x3_FF06	BDMCCR	R	CCR7	CCR6	CCR5	CCR4	CCR3	CCR2	CCR1	CCR0
		W								
0x3_FF07	Reserved	R	0	0	0	0	0	0	0	0
		W								
0x3_FF08	BDMPPR	R	BPAE	0	0	0	BPP3	BPP2	BPP1	BPP0
		W								

= Unimplemented, Reserved

= Implemented (do not alter)

X = Indeterminate

0 = Always read zero

Figure 7-2. BDM Register Summary

Global Address	Register Name		Bit 7	6	5	4	3	2	1	Bit 0
0x3_FF09	Reserved	R	0	0	0	0	0	0	0	0
		W								
0x3_FF0A	Reserved	R	0	0	0	0	0	0	0	0
		W								
0x3_FF0B	Reserved	R	0	0	0	0	0	0	0	0
		W								

= Unimplemented, Reserved

= Implemented (do not alter)

X = Indeterminate

0 = Always read zero

Figure 7-2. BDM Register Summary (continued)

7.3.2.1 BDM Status Register (BDMSTS)

Register Global Address 0x3_FF01

	7	6	5	4	3	2	1	0
R	ENBDM	BDMACT	0	SDV	TRACE	0	UNSEC	0
W								
Reset								
Special Single-Chip Mode	0[1]	1	0	0	0	0	0[2]	0
All Other Modes	0	0	0	0	0	0	0	0

= Unimplemented, Reserved

= Implemented (do not alter)

0 = Always read zero

1 ENBDM is read as 1 by a debugging environment in special single chip mode when the device is not secured or secured but fully erased (Flash). This is because the ENBDM bit is set by the standard BDM firmware before a BDM command can be fully transmitted and executed.

2 UNSEC is read as 1 by a debugging environment in special single chip mode when the device is secured and fully erased, else it is 0 and can only be read if not secure (see also bit description).

Figure 7-3. BDM Status Register (BDMSTS)

Read: All modes through BDM operation when not secured

Write: All modes through BDM operation when not secured, but subject to the following:

— ENBDM should only be set via a BDM hardware command if the BDM firmware commands are needed. (This does not apply in special single chip mode).

— BDMACT can only be set by BDM hardware upon entry into BDM. It can only be cleared by the standard BDM firmware lookup table upon exit from BDM active mode.

— All other bits, while writable via BDM hardware or standard BDM firmware write commands, should only be altered by the BDM hardware or standard firmware lookup table as part of BDM command execution.

Table 7-3. BDMSTS Field Descriptions

Field	Description
7 ENBDM	**Enable BDM** — This bit controls whether the BDM is enabled or disabled. When enabled, BDM can be made active to allow firmware commands to be executed. When disabled, BDM cannot be made active but BDM hardware commands are still allowed. 0 BDM disabled 1 BDM enabled **Note:** ENBDM is set out of reset in special single chip mode. In special single chip mode with the device secured, this bit will not be set until after the Flash erase verify tests are complete.
6 BDMACT	**BDM Active Status** — This bit becomes set upon entering BDM. The standard BDM firmware lookup table is then enabled and put into the memory map. BDMACT is cleared by a carefully timed store instruction in the standard BDM firmware as part of the exit sequence to return to user code and remove the BDM memory from the map. 0 BDM not active 1 BDM active
4 SDV	**Shift Data Valid** — This bit is set and cleared by the BDM hardware. It is set after data has been transmitted as part of a BDM firmware or hardware read command or after data has been received as part of a BDM firmware or hardware write command. It is cleared when the next BDM command has been received or BDM is exited. SDV is used by the standard BDM firmware to control program flow execution. 0 Data phase of command not complete 1 Data phase of command is complete
3 TRACE	**TRACE1 BDM Firmware Command is Being Executed** — This bit gets set when a BDM TRACE1 firmware command is first recognized. It will stay set until BDM firmware is exited by one of the following BDM commands: GO or GO_UNTIL. 0 TRACE1 command is not being executed 1 TRACE1 command is being executed
1 UNSEC	**Unsecure** — If the device is secured this bit is only writable in special single chip mode from the BDM secure firmware. It is in a zero state as secure mode is entered so that the secure BDM firmware lookup table is enabled and put into the memory map overlapping the standard BDM firmware lookup table. The secure BDM firmware lookup table verifies that the on-chip Flash is erased. This being the case, the UNSEC bit is set and the BDM program jumps to the start of the standard BDM firmware lookup table and the secure BDM firmware lookup table is turned off. If the erase test fails, the UNSEC bit will not be asserted. 0 System is in a secured mode. 1 System is in a unsecured mode. **Note:** When UNSEC is set, security is off and the user can change the state of the secure bits in the on-chip Flash EEPROM. Note that if the user does not change the state of the bits to “unsecured” mode, the system will be secured again when it is next taken out of reset.After reset this bit has no meaning or effect when the security byte in the Flash EEPROM is configured for unsecure mode.

Register Global Address 0x3_FF06

	7	6	5	4	3	2	1	0
R W	CCR7	CCR6	CCR5	CCR4	CCR3	CCR2	CCR1	CCR0
Reset								
Special Single-Chip Mode	1	1	0	0	1	0	0	0
All Other Modes	0	0	0	0	0	0	0	0

Figure 7-4. BDM CCR Holding Register (BDMCCR)

Read: All modes through BDM operation when not secured

Write: All modes through BDM operation when not secured

NOTE

When BDM is made active, the CPU stores the content of its CCR register in the BDMCCR register. However, out of special single-chip reset, the BDMCCR is set to 0xD8 and not 0xD0 which is the reset value of the CCR register in this CPU mode. Out of reset in all other modes the BDMCCR register is read zero.

When entering background debug mode, the BDM CCR holding register is used to save the condition code register of the user's program. It is also used for temporary storage in the standard BDM firmware mode. The BDM CCR holding register can be written to modify the CCR value.

7.3.2.2 BDM Program Page Index Register (BDMPPR)

Register Global Address 0x3_FF08

	7	6	5	4	3	2	1	0
R	BPAE	0	0	0	BPP3	BPP2	BPP1	BPP0
W								
Reset	0	0	0	0	0	0	0	0

= Unimplemented, Reserved

Figure 7-5. BDM Program Page Register (BDMPPR)

Read: All modes through BDM operation when not secured

Write: All modes through BDM operation when not secured

Table 7-4. BDMPPR Field Descriptions

Field	Description
7 BPAE	**BDM Program Page Access Enable Bit** — BPAE enables program page access for BDM hardware and firmware read/write instructions The BDM hardware commands used to access the BDM registers (READ_BD and WRITE_BD) can not be used for program page accesses even if the BPAE bit is set. 0 BDM Program Paging disabled 1 BDM Program Paging enabled
3–0 BPP[3:0]	**BDM Program Page Index Bits 3–0** — These bits define the selected program page. For more detailed information regarding the program page window scheme, please refer to the S12S_MMC Block Guide.

7.3.3 Family ID Assignment

The family ID is an 8-bit value located in the BDM ROM in active BDM (at global address: 0x3_FF0F). The read-only value is a unique family ID which is 0xC2 for devices with an HCS12S core.

7.4 Functional Description

The BDM receives and executes commands from a host via a single wire serial interface. There are two types of BDM commands: hardware and firmware commands.

Hardware commands are used to read and write target system memory locations and to enter active background debug mode, see Section 7.4.3, “BDM Hardware Commands”. Target system memory includes all memory that is accessible by the CPU.

Firmware commands are used to read and write CPU resources and to exit from active background debug mode, see Section 7.4.4, “Standard BDM Firmware Commands”. The CPU resources referred to are the accumulator (D), X index register (X), Y index register (Y), stack pointer (SP), and program counter (PC).

Hardware commands can be executed at any time and in any mode excluding a few exceptions as highlighted (see Section 7.4.3, “BDM Hardware Commands”) and in secure mode (see Section 7.4.1, “Security”). BDM firmware commands can only be executed when the system is not secure and is in active background debug mode (BDM).

7.4.1 Security

If the user resets into special single chip mode with the system secured, a secured mode BDM firmware lookup table is brought into the map overlapping a portion of the standard BDM firmware lookup table. The secure BDM firmware verifies that the on-chip Flash EEPROM are erased. This being the case, the UNSEC and ENBDM bit will get set. The BDM program jumps to the start of the standard BDM firmware and the secured mode BDM firmware is turned off and all BDM commands are allowed. If the Flash does not verify as erased, the BDM firmware sets the ENBDM bit, without asserting UNSEC, and the firmware enters a loop. This causes the BDM hardware commands to become enabled, but does not enable the firmware commands. This allows the BDM hardware to be used to erase the Flash.

BDM operation is not possible in any other mode than special single chip mode when the device is secured. The device can only be unsecured via BDM serial interface in special single chip mode. For more information regarding security, please see the S12S_9SEC Block Guide.

7.4.2 Enabling and Activating BDM

The system must be in active BDM to execute standard BDM firmware commands. BDM can be activated only after being enabled. BDM is enabled by setting the ENBDM bit in the BDM status (BDMSTS) register. The ENBDM bit is set by writing to the BDM status (BDMSTS) register, via the single-wire interface, using a hardware command such as WRITE_BD_BYTE.

After being enabled, BDM is activated by one of the following[1]:

- Hardware BACKGROUND command
- CPU BGND instruction
- Breakpoint force or tag mechanism[2]

When BDM is activated, the CPU finishes executing the current instruction and then begins executing the firmware in the standard BDM firmware lookup table. When BDM is activated by a breakpoint, the type of breakpoint used determines if BDM becomes active before or after execution of the next instruction.

1. BDM is enabled and active immediately out of special single-chip reset.
2. This method is provided by the S12S_DBG module.

NOTE

If an attempt is made to activate BDM before being enabled, the CPU resumes normal instruction execution after a brief delay. If BDM is not enabled, any hardware BACKGROUND commands issued are ignored by the BDM and the CPU is not delayed.

In active BDM, the BDM registers and standard BDM firmware lookup table are mapped to addresses 0x3_FF00 to 0x3_FFFF. BDM registers are mapped to addresses 0x3_FF00 to 0x3_FF0B. The BDM uses these registers which are readable anytime by the BDM. However, these registers are not readable by user programs.

When BDM is activated while CPU executes code overlapping with BDM firmware space the saved program counter (PC) will be auto incremented by one from the BDM firmware, no matter what caused the entry into BDM active mode (BGND instruction, BACKGROUND command or breakpoints). In such a case the PC must be set to the next valid address via a WRITE_PC command before executing the GO command.

7.4.3 BDM Hardware Commands

Hardware commands are used to read and write target system memory locations and to enter active background debug mode. Target system memory includes all memory that is accessible by the CPU such as on-chip RAM, Flash, I/O and control registers.

Hardware commands are executed with minimal or no CPU intervention and do not require the system to be in active BDM for execution, although, they can still be executed in this mode. When executing a hardware command, the BDM sub-block waits for a free bus cycle so that the background access does not disturb the running application program. If a free cycle is not found within 128 clock cycles, the CPU is momentarily frozen so that the BDM can steal a cycle. When the BDM finds a free cycle, the operation does not intrude on normal CPU operation provided that it can be completed in a single cycle. However, if an operation requires multiple cycles the CPU is frozen until the operation is complete, even though the BDM found a free cycle.

The BDM hardware commands are listed in Table 7-5.

The READ_BD and WRITE_BD commands allow access to the BDM register locations. These locations are not normally in the system memory map but share addresses with the application in memory. To distinguish between physical memory locations that share the same address, BDM memory resources are enabled just for the READ_BD and WRITE_BD access cycle. This allows the BDM to access BDM locations unobtrusively, even if the addresses conflict with the application memory map.

Table 7-5. Hardware Commands

Command	Opcode (hex)	Data	Description
BACKGROUND	90	None	Enter background mode if BDM is enabled. If enabled, an ACK will be issued when the part enters active background mode.
ACK_ENABLE	D5	None	Enable Handshake. Issues an ACK pulse after the command is executed.
ACK_DISABLE	D6	None	Disable Handshake. This command does not issue an ACK pulse.

Table 7-5. Hardware Commands (continued)

Command	Opcode (hex)	Data	Description
READ_BD_BYTE	E4	16-bit address 16-bit data out	Read from memory with standard BDM firmware lookup table in map. Odd address data on low byte; even address data on high byte.
READ_BD_WORD	EC	16-bit address 16-bit data out	Read from memory with standard BDM firmware lookup table in map. Must be aligned access.
READ_BYTE	E0	16-bit address 16-bit data out	Read from memory with standard BDM firmware lookup table out of map. Odd address data on low byte; even address data on high byte.
READ_WORD	E8	16-bit address 16-bit data out	Read from memory with standard BDM firmware lookup table out of map. Must be aligned access.
WRITE_BD_BYTE	C4	16-bit address 16-bit data in	Write to memory with standard BDM firmware lookup table in map. Odd address data on low byte; even address data on high byte.
WRITE_BD_WORD	CC	16-bit address 16-bit data in	Write to memory with standard BDM firmware lookup table in map. Must be aligned access.
WRITE_BYTE	C0	16-bit address 16-bit data in	Write to memory with standard BDM firmware lookup table out of map. Odd address data on low byte; even address data on high byte.
WRITE_WORD	C8	16-bit address 16-bit data in	Write to memory with standard BDM firmware lookup table out of map. Must be aligned access.

NOTE:
If enabled, ACK will occur when data is ready for transmission for all BDM READ commands and will occur after the write is complete for all BDM WRITE commands.

7.4.4 Standard BDM Firmware Commands

BDM firmware commands are used to access and manipulate CPU resources. The system must be in active BDM to execute standard BDM firmware commands, see Section 7.4.2, “Enabling and Activating BDM”. Normal instruction execution is suspended while the CPU executes the firmware located in the standard BDM firmware lookup table. The hardware command BACKGROUND is the usual way to activate BDM.

As the system enters active BDM, the standard BDM firmware lookup table and BDM registers become visible in the on-chip memory map at 0x3_FF00–0x3_FFFF, and the CPU begins executing the standard BDM firmware. The standard BDM firmware watches for serial commands and executes them as they are received.

The firmware commands are shown in Table 7-6.

Table 7-6. Firmware Commands

Command[1]	Opcode (hex)	Data	Description
READ_NEXT[2]	62	16-bit data out	Increment X index register by 2 (X = X + 2), then read word X points to.
READ_PC	63	16-bit data out	Read program counter.
READ_D	64	16-bit data out	Read D accumulator.
READ_X	65	16-bit data out	Read X index register.
READ_Y	66	16-bit data out	Read Y index register.
READ_SP	67	16-bit data out	Read stack pointer.
WRITE_NEXT[2]	42	16-bit data in	Increment X index register by 2 (X = X + 2), then write word to location pointed to by X.
WRITE_PC	43	16-bit data in	Write program counter.
WRITE_D	44	16-bit data in	Write D accumulator.
WRITE_X	45	16-bit data in	Write X index register.
WRITE_Y	46	16-bit data in	Write Y index register.
WRITE_SP	47	16-bit data in	Write stack pointer.
GO	08	none	Go to user program. If enabled, ACK will occur when leaving active background mode.
GO_UNTIL[3]	0C	none	Go to user program. If enabled, ACK will occur upon returning to active background mode.
TRACE1	10	none	Execute one user instruction then return to active BDM. If enabled, ACK will occur upon returning to active background mode.
TAGGO -> GO	18	none	(Previous enable tagging and go to user program.) This command will be deprecated and should not be used anymore. Opcode will be executed as a GO command.

1 If enabled, ACK will occur when data is ready for transmission for all BDM READ commands and will occur after the write is complete for all BDM WRITE commands.

2 When the firmware command READ_NEXT or WRITE_NEXT is used to access the BDM address space the BDM resources are accessed rather than user code. Writing BDM firmware is not possible.

3 System stop disables the ACK function and ignored commands will not have an ACK-pulse (e.g., CPU in stop or wait mode). The GO_UNTIL command will not get an Acknowledge if CPU executes the wait or stop instruction before the “UNTIL” condition (BDM active again) is reached (see Section 7.4.7, “Serial Interface Hardware Handshake Protocol” last note).

7.4.5 BDM Command Structure

Hardware and firmware BDM commands start with an 8-bit opcode followed by a 16-bit address and/or a 16-bit data word, depending on the command. All the read commands return 16 bits of data despite the byte or word implication in the command name.

8-bit reads return 16-bits of data, only one byte of which contains valid data. If reading an even address, the valid data will appear in the MSB. If reading an odd address, the valid data will appear in the LSB.

16-bit misaligned reads and writes are generally not allowed. If attempted by BDM hardware command, the BDM ignores the least significant bit of the address and assumes an even address from the remaining bits.

For hardware data read commands, the external host must wait at least 150 bus clock cycles after sending the address before attempting to obtain the read data. This is to be certain that valid data is available in the BDM shift register, ready to be shifted out. For hardware write commands, the external host must wait 150 bus clock cycles after sending the data to be written before attempting to send a new command. This is to avoid disturbing the BDM shift register before the write has been completed. The 150 bus clock cycle delay in both cases includes the maximum 128 cycle delay that can be incurred as the BDM waits for a free cycle before stealing a cycle.

For BDM firmware read commands, the external host should wait at least 48 bus clock cycles after sending the command opcode and before attempting to obtain the read data. The 48 cycle wait allows enough time for the requested data to be made available in the BDM shift register, ready to be shifted out.

For BDM firmware write commands, the external host must wait 36 bus clock cycles after sending the data to be written before attempting to send a new command. This is to avoid disturbing the BDM shift register before the write has been completed.

The external host should wait for at least for 76 bus clock cycles after a TRACE1 or GO command before starting any new serial command. This is to allow the CPU to exit gracefully from the standard BDM firmware lookup table and resume execution of the user code. Disturbing the BDM shift register prematurely may adversely affect the exit from the standard BDM firmware lookup table.

NOTE

If the bus rate of the target processor is unknown or could be changing, it is recommended that the ACK (acknowledge function) is used to indicate when an operation is complete. When using ACK, the delay times are automated.

Figure 7-6 represents the BDM command structure. The command blocks illustrate a series of eight bit times starting with a falling edge. The bar across the top of the blocks indicates that the BKGD line idles in the high state. The time for an 8-bit command is 8 × 16 target clock cycles.[1]

1. Target clock cycles are cycles measured using the target MCU's serial clock rate. See Section 7.4.6, "BDM Serial Interface" and Section 7.3.2.1, "BDM Status Register (BDMSTS)" for information on how serial clock rate is selected.

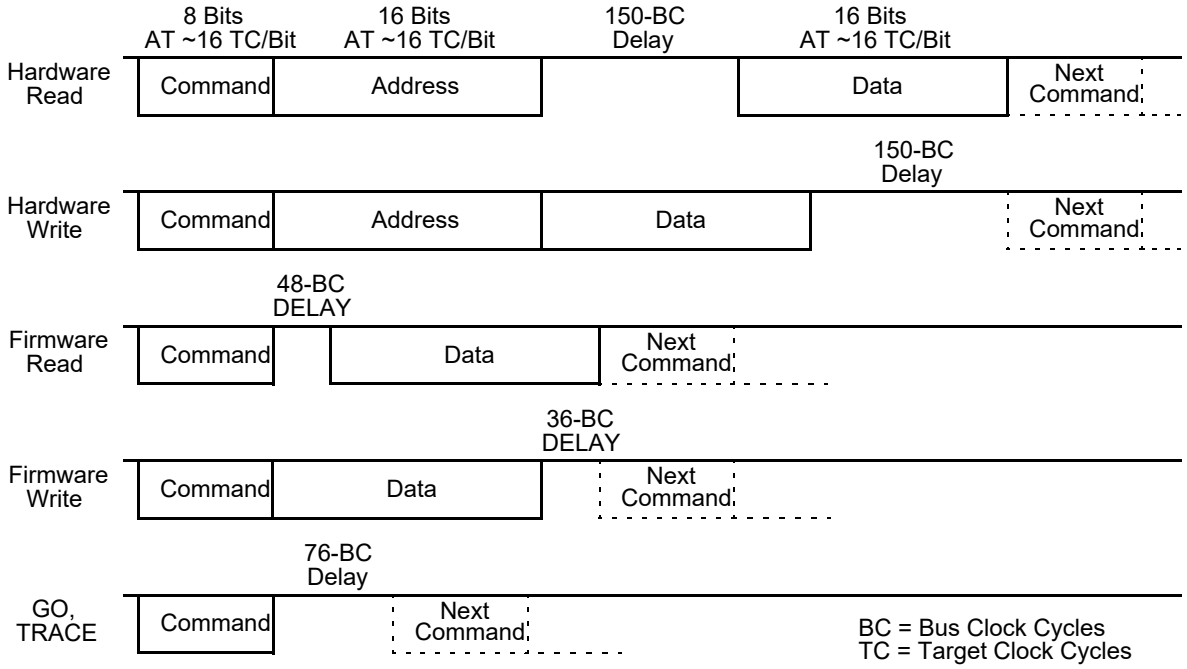

Figure 7-6. BDM Command Structure

7.4.6 BDM Serial Interface

The BDM communicates with external devices serially via the BKGD pin. During reset, this pin is a mode select input which selects between normal and special modes of operation. After reset, this pin becomes the dedicated serial interface pin for the BDM.

The BDM serial interface is timed based on the VCO clock (please refer to the CPMU Block Guide for more details), which gets divided by 8. This clock will be referred to as the target clock in the following explanation.

The BDM serial interface uses a clocking scheme in which the external host generates a falling edge on the BKGD pin to indicate the start of each bit time. This falling edge is sent for every bit whether data is transmitted or received. Data is transferred most significant bit (MSB) first at 16 target clock cycles per bit. The interface times out if 512 clock cycles occur between falling edges from the host.

The BKGD pin is a pseudo open-drain pin and has an weak on-chip active pull-up that is enabled at all times. It is assumed that there is an external pull-up and that drivers connected to BKGD do not typically drive the high level. Since R-C rise time could be unacceptably long, the target system and host provide brief driven-high (speedup) pulses to drive BKGD to a logic 1. The source of this speedup pulse is the host for transmit cases and the target for receive cases.

The timing for host-to-target is shown in Figure 7-7 and that of target-to-host in Figure 7-8 and Figure 7-9. All four cases begin when the host drives the BKGD pin low to generate a falling edge. Since the host and target are operating from separate clocks, it can take the target system up to one full clock cycle to recognize this edge. The target measures delays from this perceived start of the bit time while the host measures delays from the point it actually drove BKGD low to start the bit up to one target clock cycle

earlier. Synchronization between the host and target is established in this manner at the start of every bit time.

Figure 7-7 shows an external host transmitting a logic 1 and transmitting a logic 0 to the BKGD pin of a target system. The host is asynchronous to the target, so there is up to a one clock-cycle delay from the host-generated falling edge to where the target recognizes this edge as the beginning of the bit time. Ten target clock cycles later, the target senses the bit level on the BKGD pin. Internal glitch detect logic requires the pin be driven high no later that eight target clock cycles after the falling edge for a logic 1 transmission.

Since the host drives the high speedup pulses in these two cases, the rising edges look like digitally driven signals.

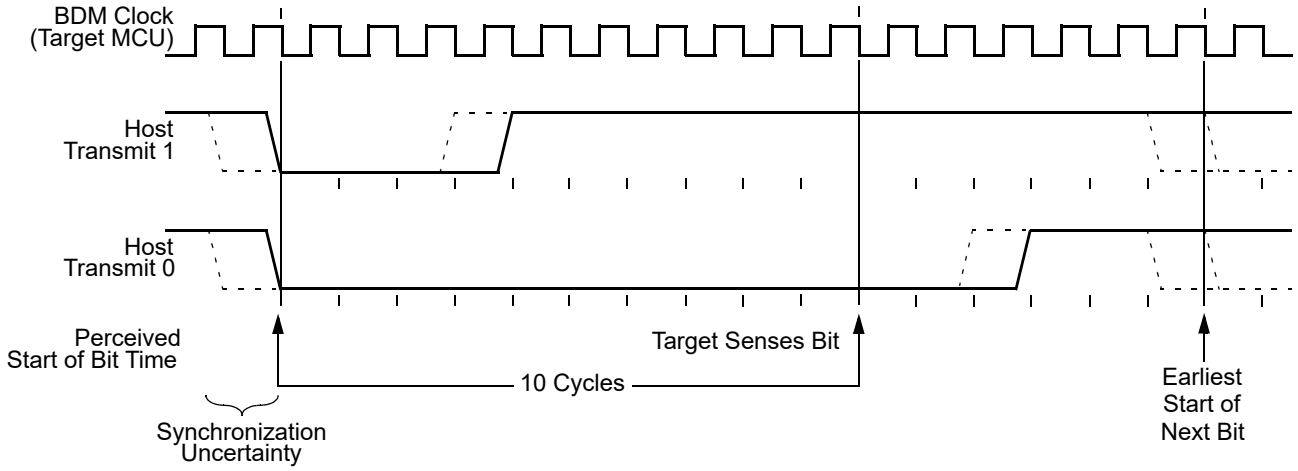

Figure 7-7. BDM Host-to-Target Serial Bit Timing

The receive cases are more complicated. Figure 7-8 shows the host receiving a logic 1 from the target system. Since the host is asynchronous to the target, there is up to one clock-cycle delay from the host-generated falling edge on BKGD to the perceived start of the bit time in the target. The host holds the BKGD pin low long enough for the target to recognize it (at least two target clock cycles). The host must release the low drive before the target drives a brief high speedup pulse seven target clock cycles after the perceived start of the bit time. The host should sample the bit level about 10 target clock cycles after it started the bit time.

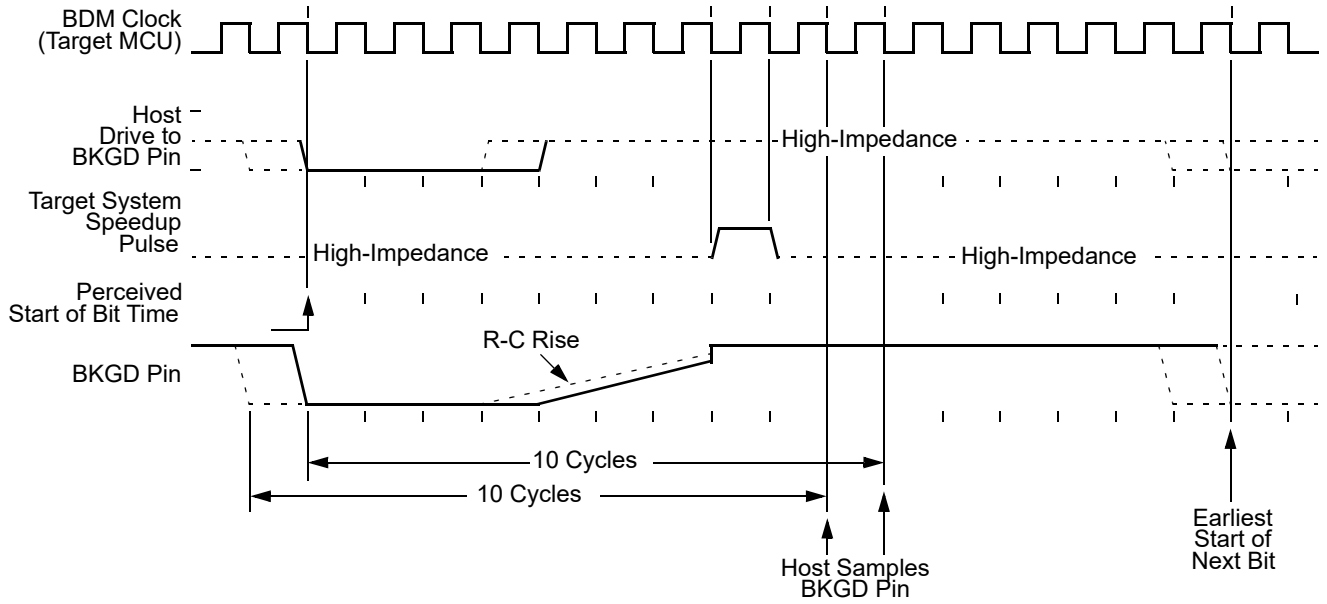

Figure 7-8. BDM Target-to-Host Serial Bit Timing (Logic 1)

Figure 7-9 shows the host receiving a logic 0 from the target. Since the host is asynchronous to the target, there is up to a one clock-cycle delay from the host-generated falling edge on BKGD to the start of the bit time as perceived by the target. The host initiates the bit time but the target finishes it. Since the target wants the host to receive a logic 0, it drives the BKGD pin low for 13 target clock cycles then briefly drives it high to speed up the rising edge. The host samples the bit level about 10 target clock cycles after starting the bit time.

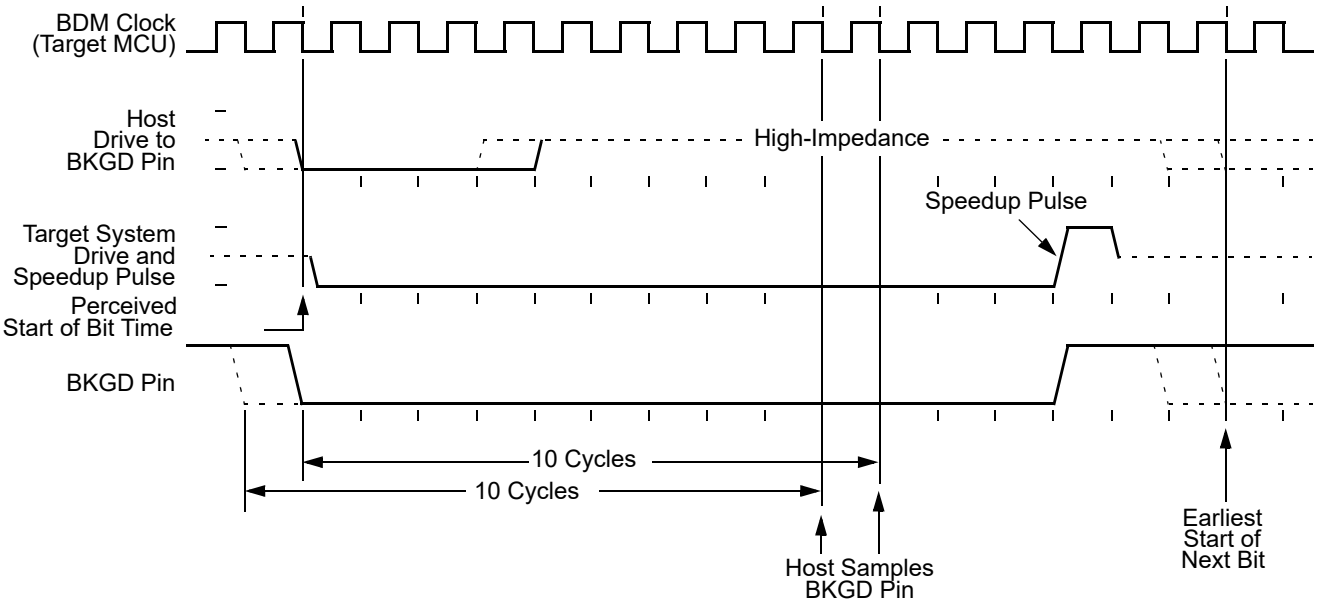

Figure 7-9. BDM Target-to-Host Serial Bit Timing (Logic 0)

7.4.7 Serial Interface Hardware Handshake Protocol

BDM commands that require CPU execution are ultimately treated at the MCU bus rate. Since the BDM clock source can be modified when changing the settings for the VCO frequency (CPMUSYNR), it is very helpful to provide a handshake protocol in which the host could determine when an issued command is executed by the CPU. The BDM clock frequency is always VCO frequency divided by 8. The alternative is to always wait the amount of time equal to the appropriate number of cycles at the slowest possible rate the clock could be running. This sub-section will describe the hardware handshake protocol.

The hardware handshake protocol signals to the host controller when an issued command was successfully executed by the target. This protocol is implemented by a 16 serial clock cycle low pulse followed by a brief speedup pulse in the BKGD pin. This pulse is generated by the target MCU when a command, issued by the host, has been successfully executed (see Figure 7-10). This pulse is referred to as the ACK pulse. After the ACK pulse has finished: the host can start the bit retrieval if the last issued command was a read command, or start a new command if the last command was a write command or a control command (BACKGROUND, GO, GO_UNTIL or TRACE1). The ACK pulse is not issued earlier than 32 serial clock cycles after the BDM command was issued. The end of the BDM command is assumed to be the 16th tick of the last bit. This minimum delay assures enough time for the host to perceive the ACK pulse. Note also that, there is no upper limit for the delay between the command and the related ACK pulse, since the command execution depends upon the CPU bus, which in some cases could be very slow due to long accesses taking place.This protocol allows a great flexibility for the POD designers, since it does not rely on any accurate time measurement or short response time to any event in the serial communication.

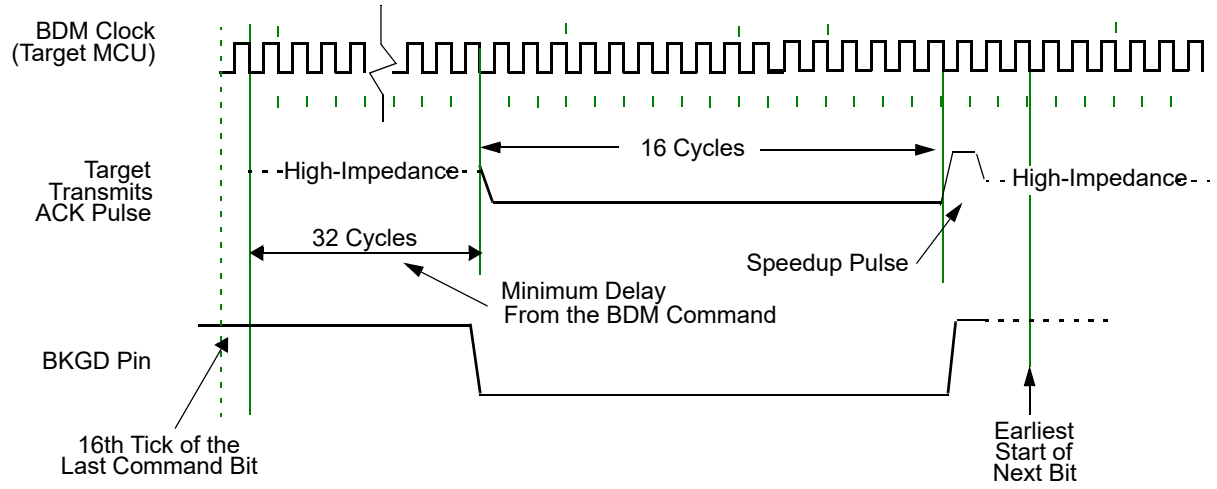

Figure 7-10. Target Acknowledge Pulse (ACK)

NOTE

If the ACK pulse was issued by the target, the host assumes the previous command was executed. If the CPU enters wait or stop prior to executing a hardware command, the ACK pulse will not be issued meaning that the BDM command was not executed. After entering wait or stop mode, the BDM command is no longer pending.

Figure 7-11 shows the ACK handshake protocol in a command level timing diagram. The READ_BYTE instruction is used as an example. First, the 8-bit instruction opcode is sent by the host, followed by the address of the memory location to be read. The target BDM decodes the instruction. A bus cycle is grabbed (free or stolen) by the BDM and it executes the READ_BYTE operation. Having retrieved the data, the BDM issues an ACK pulse to the host controller, indicating that the addressed byte is ready to be retrieved. After detecting the ACK pulse, the host initiates the byte retrieval process. Note that data is sent in the form of a word and the host needs to determine which is the appropriate byte based on whether the address was odd or even.

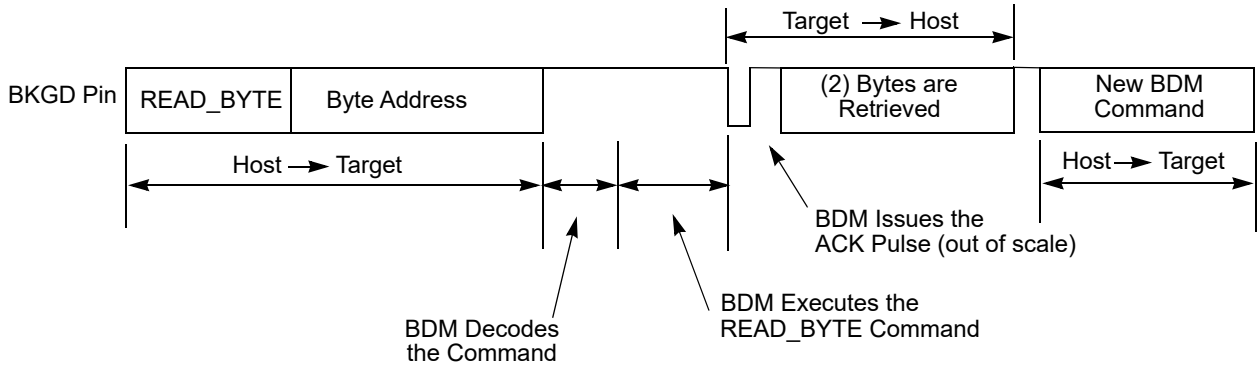

Figure 7-11. Handshake Protocol at Command Level

Differently from the normal bit transfer (where the host initiates the transmission), the serial interface ACK handshake pulse is initiated by the target MCU by issuing a negative edge in the BKGD pin. The hardware handshake protocol in Figure 7-10 specifies the timing when the BKGD pin is being driven, so the host should follow this timing constraint in order to avoid the risk of an electrical conflict in the BKGD pin.

NOTE

The only place the BKGD pin can have an electrical conflict is when one side is driving low and the other side is issuing a speedup pulse (high). Other "highs" are pulled rather than driven. However, at low rates the time of the speedup pulse can become lengthy and so the potential conflict time becomes longer as well.

The ACK handshake protocol does not support nested ACK pulses. If a BDM command is not acknowledge by an ACK pulse, the host needs to abort the pending command first in order to be able to issue a new BDM command. When the CPU enters wait or stop while the host issues a hardware command (e.g., WRITE_BYTE), the target discards the incoming command due to the wait or stop being detected. Therefore, the command is not acknowledged by the target, which means that the ACK pulse will not be issued in this case. After a certain time the host (not aware of stop or wait) should decide to abort any possible pending ACK pulse in order to be sure a new command can be issued. Therefore, the protocol provides a mechanism in which a command, and its corresponding ACK, can be aborted.

NOTE

The ACK pulse does not provide a time out. This means for the GO_UNTIL command that it can not be distinguished if a stop or wait has been executed (command discarded and ACK not issued) or if the “UNTIL” condition (BDM active) is just not reached yet. Hence in any case where the ACK pulse of a command is not issued the possible pending command should be aborted before issuing a new command. See the handshake abort procedure described in Section 7.4.8, “Hardware Handshake Abort Procedure”.

7.4.8 Hardware Handshake Abort Procedure

The abort procedure is based on the SYNC command. In order to abort a command, which had not issued the corresponding ACK pulse, the host controller should generate a low pulse in the BKGD pin by driving it low for at least 128 serial clock cycles and then driving it high for one serial clock cycle, providing a speedup pulse. By detecting this long low pulse in the BKGD pin, the target executes the SYNC protocol, see Section 7.4.9, “SYNC — Request Timed Reference Pulse”, and assumes that the pending command and therefore the related ACK pulse, are being aborted. Therefore, after the SYNC protocol has been completed the host is free to issue new BDM commands. For BDM firmware READ or WRITE commands it can not be guaranteed that the pending command is aborted when issuing a SYNC before the corresponding ACK pulse. There is a short latency time from the time the READ or WRITE access begins until it is finished and the corresponding ACK pulse is issued. The latency time depends on the firmware READ or WRITE command that is issued and on the selected bus clock rate. When the SYNC command starts during this latency time the READ or WRITE command will not be aborted, but the corresponding ACK pulse will be aborted. A pending GO, TRACE1 or GO_UNTIL command can not be aborted. Only the corresponding ACK pulse can be aborted by the SYNC command.

Although it is not recommended, the host could abort a pending BDM command by issuing a low pulse in the BKGD pin shorter than 128 serial clock cycles, which will not be interpreted as the SYNC command. The ACK is actually aborted when a negative edge is perceived by the target in the BKGD pin. The short abort pulse should have at least 4 clock cycles keeping the BKGD pin low, in order to allow the negative edge to be detected by the target. In this case, the target will not execute the SYNC protocol but the pending command will be aborted along with the ACK pulse. The potential problem with this abort procedure is when there is a conflict between the ACK pulse and the short abort pulse. In this case, the target may not perceive the abort pulse. The worst case is when the pending command is a read command (i.e., READ_BYTE). If the abort pulse is not perceived by the target the host will attempt to send a new command after the abort pulse was issued, while the target expects the host to retrieve the accessed memory byte. In this case, host and target will run out of synchronism. However, if the command to be aborted is not a read command the short abort pulse could be used. After a command is aborted the target assumes the next negative edge, after the abort pulse, is the first bit of a new BDM command.

NOTE

The details about the short abort pulse are being provided only as a reference for the reader to better understand the BDM internal behavior. It is not recommended that this procedure be used in a real application.

Since the host knows the target serial clock frequency, the SYNC command (used to abort a command) does not need to consider the lower possible target frequency. In this case, the host could issue a SYNC very close to the 128 serial clock cycles length. Providing a small overhead on the pulse length in order to assure the SYNC pulse will not be misinterpreted by the target. See Section 7.4.9, “SYNC — Request Timed Reference Pulse”.

Figure 7-12 shows a SYNC command being issued after a READ_BYTE, which aborts the READ_BYTE command. Note that, after the command is aborted a new command could be issued by the host computer.

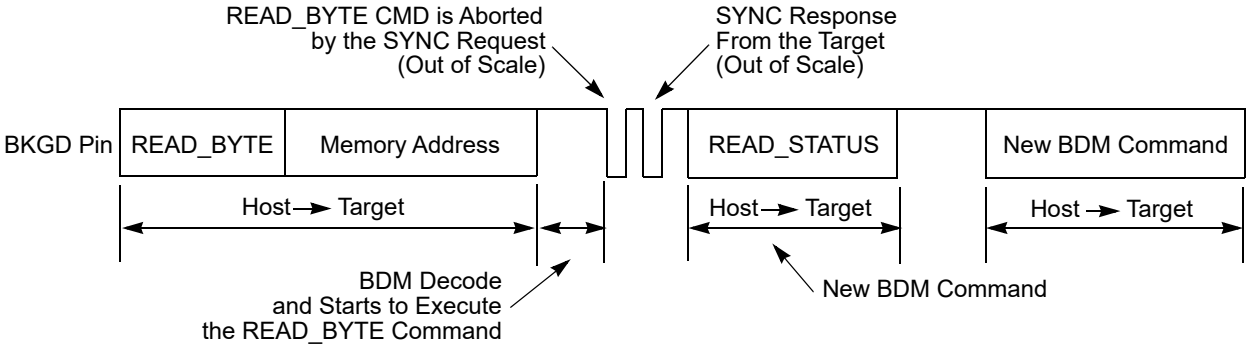

Figure 7-12. ACK Abort Procedure at the Command Level

NOTE

Figure 7-12 does not represent the signals in a true timing scale

Figure 7-13 shows a conflict between the ACK pulse and the SYNC request pulse. This conflict could occur if a POD device is connected to the target BKGD pin and the target is already in debug active mode. Consider that the target CPU is executing a pending BDM command at the exact moment the POD is being connected to the BKGD pin. In this case, an ACK pulse is issued along with the SYNC command. In this case, there is an electrical conflict between the ACK speedup pulse and the SYNC pulse. Since this is not a probable situation, the protocol does not prevent this conflict from happening.

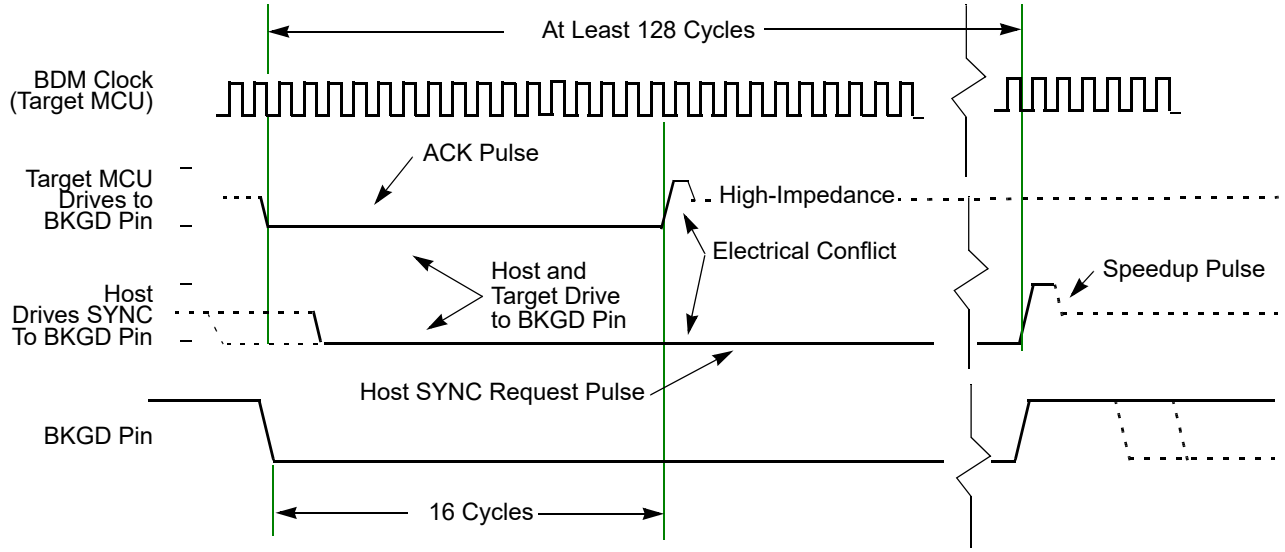

Figure 7-13. ACK Pulse and SYNC Request Conflict

NOTE

This information is being provided so that the MCU integrator will be aware that such a conflict could occur.

The hardware handshake protocol is enabled by the ACK_ENABLE and disabled by the ACK_DISABLE BDM commands. This provides backwards compatibility with the existing POD devices which are not able to execute the hardware handshake protocol. It also allows for new POD devices, that support the hardware handshake protocol, to freely communicate with the target device. If desired, without the need for waiting for the ACK pulse.

The commands are described as follows:

- ACK_ENABLE — enables the hardware handshake protocol. The target will issue the ACK pulse when a CPU command is executed by the CPU. The ACK_ENABLE command itself also has the ACK pulse as a response.
- ACK_DISABLE — disables the ACK pulse protocol. In this case, the host needs to use the worst case delay time at the appropriate places in the protocol.

The default state of the BDM after reset is hardware handshake protocol disabled.

All the read commands will ACK (if enabled) when the data bus cycle has completed and the data is then ready for reading out by the BKGD serial pin. All the write commands will ACK (if enabled) after the data has been received by the BDM through the BKGD serial pin and when the data bus cycle is complete. See Section 7.4.3, “BDM Hardware Commands” and Section 7.4.4, “Standard BDM Firmware Commands” for more information on the BDM commands.

The ACK_ENABLE sends an ACK pulse when the command has been completed. This feature could be used by the host to evaluate if the target supports the hardware handshake protocol. If an ACK pulse is issued in response to this command, the host knows that the target supports the hardware handshake protocol. If the target does not support the hardware handshake protocol the ACK pulse is not issued. In this case, the ACK_ENABLE command is ignored by the target since it is not recognized as a valid command.

The BACKGROUND command will issue an ACK pulse when the CPU changes from normal to background mode. The ACK pulse related to this command could be aborted using the SYNC command.

The GO command will issue an ACK pulse when the CPU exits from background mode. The ACK pulse related to this command could be aborted using the SYNC command.

The GO_UNTIL command is equivalent to a GO command with exception that the ACK pulse, in this case, is issued when the CPU enters into background mode. This command is an alternative to the GO command and should be used when the host wants to trace if a breakpoint match occurs and causes the CPU to enter active background mode. Note that the ACK is issued whenever the CPU enters BDM, which could be caused by a breakpoint match or by a BGND instruction being executed. The ACK pulse related to this command could be aborted using the SYNC command.

The TRACE1 command has the related ACK pulse issued when the CPU enters background active mode after one instruction of the application program is executed. The ACK pulse related to this command could be aborted using the SYNC command.

7.4.9 SYNC — Request Timed Reference Pulse

The SYNC command is unlike other BDM commands because the host does not necessarily know the correct communication speed to use for BDM communications until after it has analyzed the response to the SYNC command. To issue a SYNC command, the host should perform the following steps:

1. Drive the BKGD pin low for at least 128 cycles at the lowest possible BDM serial communication frequency (The lowest serial communication frequency is determined by the settings for the VCO clock (CPMUSYNR). The BDM clock frequency is always VCO clock frequency divided by 8.)
2. Drive BKGD high for a brief speedup pulse to get a fast rise time (this speedup pulse is typically one cycle of the host clock.)
3. Remove all drive to the BKGD pin so it reverts to high impedance.
4. Listen to the BKGD pin for the sync response pulse.

Upon detecting the SYNC request from the host, the target performs the following steps:

1. Discards any incomplete command received or bit retrieved.
2. Waits for BKGD to return to a logic one.
3. Delays 16 cycles to allow the host to stop driving the high speedup pulse.
4. Drives BKGD low for 128 cycles at the current BDM serial communication frequency.
5. Drives a one-cycle high speedup pulse to force a fast rise time on BKGD.
6. Removes all drive to the BKGD pin so it reverts to high impedance.

The host measures the low time of this 128 cycle SYNC response pulse and determines the correct speed for subsequent BDM communications. Typically, the host can determine the correct communication speed within a few percent of the actual target speed and the communication protocol can easily tolerate speed errors of several percent.

As soon as the SYNC request is detected by the target, any partially received command or bit retrieved is discarded. This is referred to as a soft-reset, equivalent to a time-out in the serial communication. After the SYNC response, the target will consider the next negative edge (issued by the host) as the start of a new BDM command or the start of new SYNC request.

Another use of the SYNC command pulse is to abort a pending ACK pulse. The behavior is exactly the same as in a regular SYNC command. Note that one of the possible causes for a command to not be acknowledged by the target is a host-target synchronization problem. In this case, the command may not have been understood by the target and so an ACK response pulse will not be issued.

7.4.10 Instruction Tracing

When a TRACE1 command is issued to the BDM in active BDM, the CPU exits the standard BDM firmware and executes a single instruction in the user code. Once this has occurred, the CPU is forced to return to the standard BDM firmware and the BDM is active and ready to receive a new command. If the TRACE1 command is issued again, the next user instruction will be executed. This facilitates stepping or tracing through the user code one instruction at a time.

If an interrupt is pending when a TRACE1 command is issued, the interrupt stacking operation occurs but no user instruction is executed. Once back in standard BDM firmware execution, the program counter points to the first instruction in the interrupt service routine.

Be aware when tracing through the user code that the execution of the user code is done step by step but all peripherals are free running. Hence possible timing relations between CPU code execution and occurrence of events of other peripherals no longer exist.

Do not trace the CPU instruction BGND used for soft breakpoints. Tracing over the BGND instruction will result in a return address pointing to BDM firmware address space.

When tracing through user code which contains stop or wait instructions the following will happen when the stop or wait instruction is traced:

The CPU enters stop or wait mode and the TRACE1 command can not be finished before leaving the low power mode. This is the case because BDM active mode can not be entered after CPU executed the stop instruction. However all BDM hardware commands except the BACKGROUND command are operational after tracing a stop or wait instruction and still being in stop or wait mode. If system stop mode is entered (all bus masters are in stop mode) no BDM command is operational.

As soon as stop or wait mode is exited the CPU enters BDM active mode and the saved PC value points to the entry of the corresponding interrupt service routine.

In case the handshake feature is enabled the corresponding ACK pulse of the TRACE1 command will be discarded when tracing a stop or wait instruction. Hence there is no ACK pulse when BDM active mode is entered as part of the TRACE1 command after CPU exited from stop or wait mode. All valid commands sent during CPU being in stop or wait mode or after CPU exited from stop or wait mode will have an ACK pulse. The handshake feature becomes disabled only when system stop mode has been reached. Hence after a system stop mode the handshake feature must be enabled again by sending the ACK_ENABLE command.

7.4.11 Serial Communication Time Out

The host initiates a host-to-target serial transmission by generating a falling edge on the BKGD pin. If BKGD is kept low for more than 128 target clock cycles, the target understands that a SYNC command was issued. In this case, the target will keep waiting for a rising edge on BKGD in order to answer the SYNC request pulse. If the rising edge is not detected, the target will keep waiting forever without any time-out limit.

Consider now the case where the host returns BKGD to logic one before 128 cycles. This is interpreted as a valid bit transmission, and not as a SYNC request. The target will keep waiting for another falling edge marking the start of a new bit. If, however, a new falling edge is not detected by the target within 512 clock cycles since the last falling edge, a time-out occurs and the current command is discarded without affecting memory or the operating mode of the MCU. This is referred to as a soft-reset.

If a read command is issued but the data is not retrieved within 512 serial clock cycles, a soft-reset will occur causing the command to be disregarded. The data is not available for retrieval after the time-out has occurred. This is the expected behavior if the handshake protocol is not enabled. In order to allow the data to be retrieved even with a large clock frequency mismatch (between BDM and CPU) when the hardware

handshake protocol is enabled, the time out between a read command and the data retrieval is disabled. Therefore, the host could wait for more then 512 serial clock cycles and still be able to retrieve the data from an issued read command. However, once the handshake pulse (ACK pulse) is issued, the time-out feature is re-activated, meaning that the target will time out after 512 clock cycles. Therefore, the host needs to retrieve the data within a 512 serial clock cycles time frame after the ACK pulse had been issued. After that period, the read command is discarded and the data is no longer available for retrieval. Any negative edge in the BKGD pin after the time-out period is considered to be a new command or a SYNC request.

Note that whenever a partially issued command, or partially retrieved data, has occurred the time out in the serial communication is active. This means that if a time frame higher than 512 serial clock cycles is observed between two consecutive negative edges and the command being issued or data being retrieved is not complete, a soft-reset will occur causing the partially received command or data retrieved to be disregarded. The next negative edge in the BKGD pin, after a soft-reset has occurred, is considered by the target as the start of a new BDM command, or the start of a SYNC request pulse.

Chapter 8
S12S Debug Module (S12SDBGV2)

Table 8-1. Revision History

Revision Number	Revision Date	Sections Affected	Summary of Changes
02.08	09.MAY.2008	General	Spelling corrections. Revision history format changed.
02.09	29.MAY.2008	8.4.5.4	Added note for end aligned, PurePC, rollover case.
02.10	27.SEP.2012	General	Changed cross reference formats

8.1 Introduction

The S12SDBG module provides an on-chip trace buffer with flexible triggering capability to allow non-intrusive debug of application software. The S12SDBG module is optimized for S12SCPU debugging.

Typically the S12SDBG module is used in conjunction with the S12SBDM module, whereby the user configures the S12SDBG module for a debugging session over the BDM interface. Once configured the S12SDBG module is armed and the device leaves BDM returning control to the user program, which is then monitored by the S12SDBG module. Alternatively the S12SDBG module can be configured over a serial interface using SWI routines.

8.1.1 Glossary Of Terms

COF: Change Of Flow. Change in the program flow due to a conditional branch, indexed jump or interrupt

BDM: Background Debug Mode

S12SBDM: Background Debug Module

DUG: Device User Guide, describing the features of the device into which the DBG is integrated

WORD: 16-bit data entity

Data Line: 20-bit data entity

CPU: S12SCPU module

DBG: S12SDBG module

POR: Power On Reset

Tag: Tags can be attached to CPU opcodes as they enter the instruction pipe. If the tagged opcode reaches the execution stage a tag hit occurs.

8.1.2 Overview

The comparators monitor the bus activity of the CPU module. A match can initiate a state sequencer transition. On a transition to the Final State, bus tracing is triggered and/or a breakpoint can be generated.

Independent of comparator matches a transition to Final State with associated tracing and breakpoint can be triggered immediately by writing to the TRIG control bit.

The trace buffer is visible through a 2-byte window in the register address map and can be read out using standard 16-bit word reads. Tracing is disabled when the MCU system is secured.

8.1.3 Features

- Three comparators (A, B and C)
  - Comparators A compares the full address bus and full 16-bit data bus
  - Comparator A features a data bus mask register
  - Comparators B and C compare the full address bus only
  - Each comparator features selection of read or write access cycles
  - Comparator B allows selection of byte or word access cycles
  - Comparator matches can initiate state sequencer transitions
- Three comparator modes
  - Simple address/data comparator match mode
  - Inside address range mode, Addmin ≤ Address ≤ Addmax
  - Outside address range match mode, Address < Addmin or Address > Addmax
- Two types of matches
  - Tagged — This matches just before a specific instruction begins execution
  - Force — This is valid on the first instruction boundary after a match occurs
- Two types of breakpoints
  - CPU breakpoint entering BDM on breakpoint (BDM)
  - CPU breakpoint executing SWI on breakpoint (SWI)
- Trigger mode independent of comparators
  - TRIG Immediate software trigger
- Four trace modes
  - Normal: change of flow (COF) PC information is stored (see Section 8.4.5.2.1, “Normal Mode) for change of flow definition.
  - Loop1: same as Normal but inhibits consecutive duplicate source address entries
  - Detail: address and data for all cycles except free cycles and opcode fetches are stored
  - Compressed Pure PC: all program counter addresses are stored

- 4-stage state sequencer for trace buffer control
  - — Tracing session trigger linked to Final State of state sequencer
  - — Begin and End alignment of tracing to trigger

8.1.4 Modes of Operation

The DBG module can be used in all MCU functional modes.

During BDM hardware accesses and whilst the BDM module is active, CPU monitoring is disabled. When the CPU enters active BDM Mode through a BACKGROUND command, the DBG module, if already armed, remains armed.

The DBG module tracing is disabled if the MCU is secure, however, breakpoints can still be generated.

Table 8-2. Mode Dependent Restriction Summary

BDM Enable	BDM Active	MCU Secure	Comparator Matches Enabled	Breakpoints Possible	Tagging Possible	Tracing Possible
x	x	1	Yes	Yes	Yes	No
0	0	0	Yes	Only SWI	Yes	Yes
0	1	0	Active BDM not possible when not enabled			
1	0	0	Yes	Yes	Yes	Yes
1	1	0	No	No	No	No

8.1.5 Block Diagram

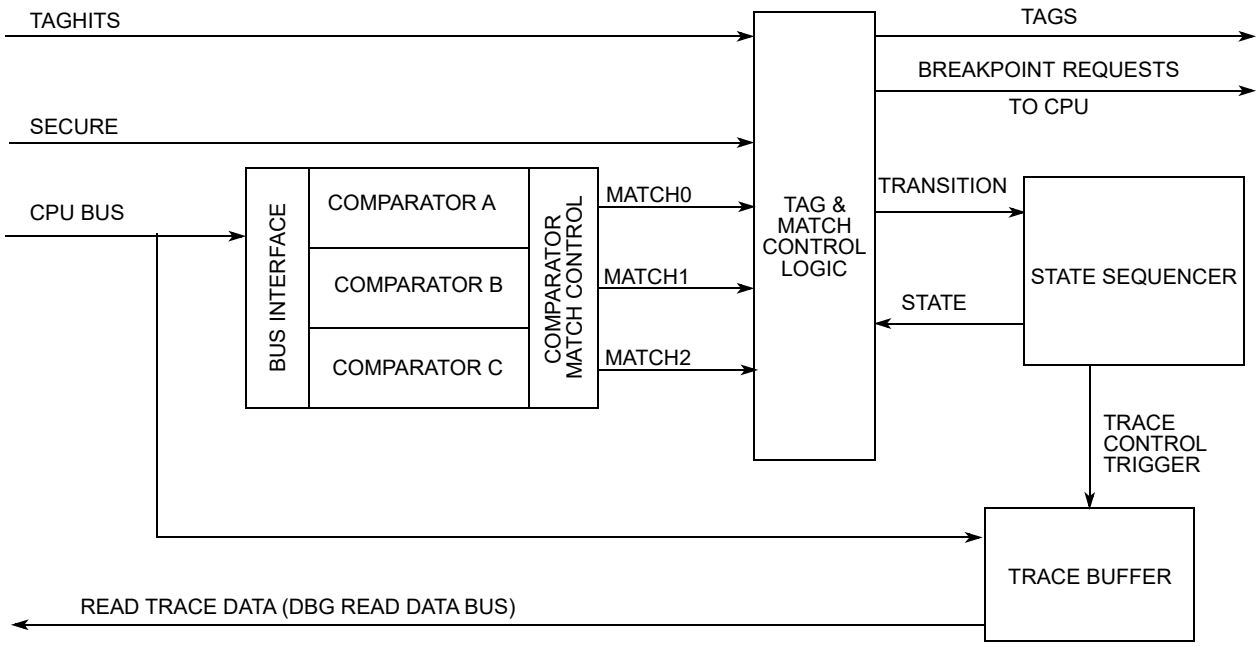

Figure 8-1. Debug Module Block Diagram

8.2 External Signal Description

There are no external signals associated with this module.

8.3 Memory Map and Registers

8.3.1 Module Memory Map

A summary of the registers associated with the DBG sub-block is shown in Figure 8-2. Detailed descriptions of the registers and bits are given in the subsections that follow.

Address	Name		Bit 7	6	5	4	3	2	1	Bit 0
0x0020	DBGC1	R	ARM	0	0	BDM	DBGBRK	0	COMRV	
		W		TRIG						
0x0021	DBGSR	R	[1]TBF	0	0	0	0	SSF2	SSF1	SSF0
		W								
0x0022	DBGTCR	R	0	TSOURCE	0	0	TRCMOD		0	TALIGN
		W								
0x0023	DBGC2	R	0	0	0	0	0	0	ABCM	
		W								
0x0024	DBGTBH	R	Bit 15	Bit 14	Bit 13	Bit 12	Bit 11	Bit 10	Bit 9	Bit 8
		W								
0x0025	DBGTBL	R	Bit 7	Bit 6	Bit 5	Bit 4	Bit 3	Bit 2	Bit 1	Bit 0
		W								
0x0026	DBGCNT	R	[1] TBF	0	CNT					
		W								
0x0027	DBGSCRX	R	0	0	0	0	SC3	SC2	SC1	SC0
		W								
0x0027	DBGMFR	R	0	0	0	0	0	MC2	MC1	MC0
		W								
[2] 0x0028	DBGACTL	R	SZE	SZ	TAG	BRK	RW	RWE	NDB	COMPE
		W								
[3] 0x0028	DBGBCTL	R	SZE	SZ	TAG	BRK	RW	RWE	0	COMPE
		W								
[4] 0x0028	DBGCCTL	R	0	0	TAG	BRK	RW	RWE	0	COMPE
		W								
0x0029	DBGXAH	R	0	0	0	0	0	0	Bit 17	Bit 16
		W								
0x002A	DBGXAM	R	Bit 15	14	13	12	11	10	9	Bit 8
		W								
0x002B	DBGXAL	R	Bit 7	6	5	4	3	2	1	Bit 0
		W								

Figure 8-2. Quick Reference to DBG Registers

Address	Name		Bit 7	6	5	4	3	2	1	Bit 0
0x002C	DBGADH	R W	Bit 15	14	13	12	11	10	9	Bit 8
0x002D	DBGADL	R W	Bit 7	6	5	4	3	2	1	Bit 0
0x002E	DBGADHM	R W	Bit 15	14	13	12	11	10	9	Bit 8
0x002F	DBGADLM	R W	Bit 7	6	5	4	3	2	1	Bit 0

1 This bit is visible at DBGCNT[7] and DBGSR[7]

2 This represents the contents if the Comparator A control register is blended into this address.

3 This represents the contents if the Comparator B control register is blended into this address

4 This represents the contents if the Comparator C control register is blended into this address

Figure 8-2. Quick Reference to DBG Registers

8.3.2 Register Descriptions

This section consists of the DBG control and trace buffer register descriptions in address order. Each comparator has a bank of registers that are visible through an 8-byte window between 0x0028 and 0x002F in the DBG module register address map. When ARM is set in DBGC1, the only bits in the DBG module registers that can be written are ARM, TRIG, and COMRV[1:0].

8.3.2.1 Debug Control Register 1 (DBGC1)

Address: 0x0020

	7	6	5	4	3	2	1	0
R	ARM	0	0	BDM	DBGBRK	0	COMRV	
W		TRIG						
Reset	0	0	0	0	0	0	0	0

= Unimplemented or Reserved

Figure 8-3. Debug Control Register (DBGC1)

Read: Anytime

Write: Bits 7, 1, 0 anytime
Bit 6 can be written anytime but always reads back as 0.
Bits 4:3 anytime DBG is not armed.

NOTE

When disarming the DBG by clearing ARM with software, the contents of bits[4:3] are not affected by the write, since up until the write operation, ARM = 1 preventing these bits from being written. These bits must be cleared using a second write if required.

Table 8-3. DBGC1 Field Descriptions

Field	Description
7 ARM	**Arm Bit** — The ARM bit controls whether the DBG module is armed. This bit can be set and cleared by user software and is automatically cleared on completion of a debug session, or if a breakpoint is generated with tracing not enabled. On setting this bit the state sequencer enters State1. 0 Debugger disarmed 1 Debugger armed
6 TRIG	**Immediate Trigger Request Bit** — This bit when written to 1 requests an immediate trigger independent of state sequencer status. When tracing is complete a forced breakpoint may be generated depending upon DBGBRK and BDM bit settings. This bit always reads back a 0. Writing a 0 to this bit has no effect. If the DBGTCR_TSOURCE bit is clear no tracing is carried out. If tracing has already commenced using BEGIN trigger alignment, it continues until the end of the tracing session as defined by the TALIGN bit, thus TRIG has no affect. In secure mode tracing is disabled and writing to this bit cannot initiate a tracing session. The session is ended by setting TRIG and ARM simultaneously. 0 Do not trigger until the state sequencer enters the Final State. 1 Trigger immediately
4 BDM	**Background Debug Mode Enable** — This bit determines if a breakpoint causes the system to enter Background Debug Mode (BDM) or initiate a Software Interrupt (SWI). If this bit is set but the BDM is not enabled by the ENBDM bit in the BDM module, then breakpoints default to SWI. 0 Breakpoint to Software Interrupt if BDM inactive. Otherwise no breakpoint. 1 Breakpoint to BDM, if BDM enabled. Otherwise breakpoint to SWI
3 DBGBRK	S12SDBG **Breakpoint Enable Bit** — The DBGBRK bit controls whether the debugger will request a breakpoint on reaching the state sequencer Final State. If tracing is enabled, the breakpoint is generated on completion of the tracing session. If tracing is not enabled, the breakpoint is generated immediately. 0 No Breakpoint generated 1 Breakpoint generated
1–0 COMRV	**Comparator Register Visibility Bits** — These bits determine which bank of comparator register is visible in the 8-byte window of the S12SDBG module address map, located between 0x0028 to 0x002F. Furthermore these bits determine which register is visible at the address 0x0027. See Table 8-4.

Table 8-4. COMRV Encoding

COMRV	Visible Comparator	Visible Register at 0x0027
00	Comparator A	DBGSCR1
01	Comparator B	DBGSCR2
10	Comparator C	DBGSCR3
11	None	DBGMFR

8.3.2.2 Debug Status Register (DBGSR)

Address: 0x0021

	7	6	5	4	3	2	1	0
R	TBF	0	0	0	0	SSF2	SSF1	SSF0
W								
Reset	—	0	0	0	0	0	0	0
POR	0	0	0	0	0	0	0	0

= Unimplemented or Reserved

Figure 8-4. Debug Status Register (DBGSR)

Read: Anytime

Write: Never

Table 8-5. DBGSR Field Descriptions

Field	Description
7 TBF	**Trace Buffer Full** — The TBF bit indicates that the trace buffer has stored 64 or more lines of data since it was last armed. If this bit is set, then all 64 lines will be valid data, regardless of the value of DBGCNT bits. The TBF bit is cleared when ARM in DBGC1 is written to a one. The TBF is cleared by the power on reset initialization. Other system generated resets have no affect on this bit This bit is also visible at DBGCNT[7]
2–0 SSF[2:0]	**State Sequencer Flag Bits** — The SSF bits indicate in which state the State Sequencer is currently in. During a debug session on each transition to a new state these bits are updated. If the debug session is ended by software clearing the ARM bit, then these bits retain their value to reflect the last state of the state sequencer before disarming. If a debug session is ended by an internal event, then the state sequencer returns to state0 and these bits are cleared to indicate that state0 was entered during the session. On arming the module the state sequencer enters state1 and these bits are forced to SSF[2:0] = 001. See Table 8-6.

Table 8-6. SSF[2:0] — State Sequence Flag Bit Encoding

SSF[2:0]	Current State
000	State0 (disarmed)
001	State1
010	State2
011	State3
100	Final State
101,110,111	Reserved

8.3.2.3 Debug Trace Control Register (DBGTCR)

Address: 0x0022

	7	6	5	4	3	2	1	0
R	0	TSOURCE	0	0	TRCMOD		0	TALIGN
W								
Reset	0	0	0	0	0	0	0	0

Figure 8-5. Debug Trace Control Register (DBGTCR)

Read: Anytime

Write: Bit 6 only when DBG is neither secure nor armed.Bits 3,2,0 anytime the module is disarmed.

Table 8-7. DBGTCR Field Descriptions

Field	Description
6 TSOURCE	**Trace Source Control Bit** — The TSOURCE bit enables a tracing session given a trigger condition. If the MCU system is secured, this bit cannot be set and tracing is inhibited. This bit must be set to read the trace buffer. 0 Debug session without tracing requested 1 Debug session with tracing requested
3–2 TRCMOD	**Trace Mode Bits** — See Section 8.4.5.2, “Trace Modes for detailed Trace Mode descriptions. In Normal Mode, change of flow information is stored. In Loop1 Mode, change of flow information is stored but redundant entries into trace memory are inhibited. In Detail Mode, address and data for all memory and register accesses is stored. In Compressed Pure PC mode the program counter value for each instruction executed is stored. See Table 8-8.
0 TALIGN	**Trigger Align Bit** — This bit controls whether the trigger is aligned to the beginning or end of a tracing session. 0 Trigger at end of stored data 1 Trigger before storing data

Table 8-8. TRCMOD Trace Mode Bit Encoding

TRCMOD	Description
00	Normal
01	Loop1
10	Detail
11	Compressed Pure PC

8.3.2.4 Debug Control Register2 (DBGC2)

Address: 0x0023

	7	6	5	4	3	2	1	0
R	0	0	0	0	0	0	ABCM	
W								
Reset	0	0	0	0	0	0	0	0

= Unimplemented or Reserved

Figure 8-6. Debug Control Register2 (DBGC2)

Read: Anytime

Write: Anytime the module is disarmed.

This register configures the comparators for range matching.

Table 8-9. DBGC2 Field Descriptions

Field	Description
1–0 ABCM[1:0]	**A and B Comparator Match Control** — These bits determine the A and B comparator match mapping as described in Table 8-10.

Table 8-10. ABCM Encoding

ABCM	Description
00	Match0 mapped to comparator A match: Match1 mapped to comparator B match.
01	Match 0 mapped to comparator A/B inside range: Match1 disabled.
10	Match 0 mapped to comparator A/B outside range: Match1 disabled.
11	Reserved[1]

[1] Currently defaults to Comparator A, Comparator B disabled

8.3.2.5 Debug Trace Buffer Register (DBGTBH:DBGTBL)

Address: 0x0024, 0x0025

	15	14	13	12	11	10	9	8	7	6	5	4	3	2	1	0
R W	Bit 15	Bit 14	Bit 13	Bit 12	Bit 11	Bit 10	Bit 9	Bit 8	Bit 7	Bit 6	Bit 5	Bit 4	Bit 3	Bit 2	Bit 1	Bit 0
POR	X	X	X	X	X	X	X	X	X	X	X	X	X	X	X	X
Other Resets	—	—	—	—	—	—	—	—	—	—	—	—	—	—	—	—

Figure 8-7. Debug Trace Buffer Register (DBGTB)

Read: Only when unlocked AND unsecured AND not armed AND TSOURCE set.

Write: Aligned word writes when disarmed unlock the trace buffer for reading but do not affect trace buffer contents.

Table 8-11. DBGTB Field Descriptions

Field	Description
15–0 Bit[15:0]	**Trace Buffer Data Bits** — The Trace Buffer Register is a window through which the 20-bit wide data lines of the Trace Buffer may be read 16 bits at a time. Each valid read of DBGTB increments an internal trace buffer pointer which points to the next address to be read. When the ARM bit is set the trace buffer is locked to prevent reading. The trace buffer can only be unlocked for reading by writing to DBGTB with an aligned word write when the module is disarmed. The DBGTB register can be read only as an aligned word, any byte reads or misaligned access of these registers return 0 and do not cause the trace buffer pointer to increment to the next trace buffer address. Similarly reads while the debugger is armed or with the TSOURCE bit clear, return 0 and do not affect the trace buffer pointer. The POR state is undefined. Other resets do not affect the trace buffer contents.

8.3.2.6 Debug Count Register (DBGCNT)

Address: 0x0026

	7	6	5	4	3	2	1	0
R	TBF	0	CNT					
W								
Reset	—	—	—	—	—	—	—	—
POR	0	0	0	0	0	0	0	0

= Unimplemented or Reserved

Figure 8-8. Debug Count Register (DBGCNT)

Read: Anytime

Write: Never

Table 8-12. DBGCNT Field Descriptions

Field	Description
7 TBF	**Trace Buffer Full** — The TBF bit indicates that the trace buffer has stored 64 or more lines of data since it was last armed. If this bit is set, then all 64 lines will be valid data, regardless of the value of DBGCNT bits. The TBF bit is cleared when ARM in DBGC1 is written to a one. The TBF is cleared by the power on reset initialization. Other system generated resets have no affect on this bit This bit is also visible at DBGSR[7]
5–0 CNT[5:0]	**Count Value** — The CNT bits indicate the number of valid data 20-bit data lines stored in the Trace Buffer. Table 8-13 shows the correlation between the CNT bits and the number of valid data lines in the Trace Buffer. When the CNT rolls over to zero, the TBF bit in DBGSR is set and incrementing of CNT will continue in end-trigger mode. The DBGCNT register is cleared when ARM in DBGC1 is written to a one. The DBGCNT register is cleared by power-on-reset initialization but is not cleared by other system resets. Thus should a reset occur during a debug session, the DBGCNT register still indicates after the reset, the number of valid trace buffer entries stored before the reset occurred. The DBGCNT register is not decremented when reading from the trace buffer.

Table 8-13. CNT Decoding Table

TBF	CNT[5:0]	Description
0	000000	No data valid
0	000001 000010 000100 000110 .. 111111	1 line valid 2 lines valid 4 lines valid 6 lines valid .. 63 lines valid
1	000000	64 lines valid; if using Begin trigger alignment, ARM bit will be cleared and the tracing session ends.
1	000001 111110	64 lines valid, oldest data has been overwritten by most recent data

8.3.2.7 Debug State Control Registers

There is a dedicated control register for each of the state sequencer states 1 to 3 that determines if transitions from that state are allowed, depending upon comparator matches or tag hits, and defines the next state for the state sequencer following a match. The three debug state control registers are located at the same address in the register address map (0x0027). Each register can be accessed using the COMRV bits in DBGC1 to blend in the required register. The COMRV = 11 value blends in the match flag register (DBGMFR).

Table 8-14. State Control Register Access Encoding

COMRV	Visible State Control Register
00	DBGSCR1

Table 8-14. State Control Register Access Encoding

COMRV	Visible State Control Register
01	DBGSCR2
10	DBGSCR3
11	DBGMFR

8.3.2.7.1 Debug State Control Register 1 (DBGSCR1)

Address: 0x0027

	7	6	5	4	3	2	1	0
R	0	0	0	0	SC3	SC2	SC1	SC0
W								
Reset	0	0	0	0	0	0	0	0

= Unimplemented or Reserved

Figure 8-9. Debug State Control Register 1 (DBGSCR1)

Read: If COMRV[1:0] = 00

Write: If COMRV[1:0] = 00 and DBG is not armed.

This register is visible at 0x0027 only with COMRV[1:0] = 00. The state control register 1 selects the targeted next state whilst in State1. The matches refer to the match channels of the comparator match control logic as depicted in Figure 8-1 and described in Section 8.3.2.8.1, “Debug Comparator Control Register (DBGXCTL). Comparators must be enabled by setting the comparator enable bit in the associated DBGXCTL control register.

Table 8-15. DBGSCR1 Field Descriptions

Field	Description
3–0 SC[3:0]	These bits select the targeted next state whilst in State1, based upon the match event.

Table 8-16. State1 Sequencer Next State Selection

SC[3:0]	Description (Unspecified matches have no effect)
0000	Any match to Final State
0001	Match1 to State3
0010	Match2 to State2
0011	Match1 to State2
0100	Match0 to State2..... Match1 to State3
0101	Match1 to State3.....Match0 to Final State
0110	Match0 to State2..... Match2 to State3
0111	Either Match0 or Match1 to State2
1000	Reserved
1001	Match0 to State3

Table 8-16. State1 Sequencer Next State Selection

SC[3:0]	Description (Unspecified matches have no effect)
1010	Reserved
1011	Reserved
1100	Reserved
1101	Either Match0 or Match2 to Final State.....Match1 to State2
1110	Reserved
1111	Reserved

The priorities described in Table 8-36 dictate that in the case of simultaneous matches, a match leading to final state has priority followed by the match on the lower channel number (0,1,2). Thus with SC[3:0]=1101 a simultaneous match0/match1 transitions to final state.

8.3.2.7.2 Debug State Control Register 2 (DBGSCR2)

Address: 0x0027

	7	6	5	4	3	2	1	0
R	0	0	0	0	SC3	SC2	SC1	SC0
W								
Reset	0	0	0	0	0	0	0	0

= Unimplemented or Reserved

Figure 8-10. Debug State Control Register 2 (DBGSCR2)

Read: If COMRV[1:0] = 01

Write: If COMRV[1:0] = 01 and DBG is not armed.

This register is visible at 0x0027 only with COMRV[1:0] = 01. The state control register 2 selects the targeted next state whilst in State2. The matches refer to the match channels of the comparator match control logic as depicted in Figure 8-1 and described in Section 8.3.2.8.1, “Debug Comparator Control Register (DBGXCTL). Comparators must be enabled by setting the comparator enable bit in the associated DBGXCTL control register.

Table 8-17. DBGSCR2 Field Descriptions

Field	Description
3–0 SC[3:0]	These bits select the targeted next state whilst in State2, based upon the match event.

Table 8-18. State2 —Sequencer Next State Selection

SC[3:0]	Description (Unspecified matches have no effect)
0000	Match0 to State1..... Match2 to State3.
0001	Match1 to State3
0010	Match2 to State3
0011	Match1 to State3..... Match0 Final State
0100	Match1 to State1..... Match2 to State3.

Table 8-18. State2 —Sequencer Next State Selection

SC[3:0]	Description (Unspecified matches have no effect)
0101	Match2 to Final State
0110	Match2 to State1..... Match0 to Final State
0111	Either Match0 or Match1 to Final State
1000	Reserved
1001	Reserved
1010	Reserved
1011	Reserved
1100	Either Match0 or Match1 to Final State.....Match2 to State3
1101	Reserved
1110	Reserved
1111	Either Match0 or Match1 to Final State.....Match2 to State1

The priorities described in Table 8-36 dictate that in the case of simultaneous matches, a match leading to final state has priority followed by the match on the lower channel number (0,1,2).

8.3.2.7.3 Debug State Control Register 3 (DBGSCR3)

Address: 0x0027

	7	6	5	4	3	2	1	0
R	0	0	0	0	SC3	SC2	SC1	SC0
W								
Reset	0	0	0	0	0	0	0	0

= Unimplemented or Reserved

Figure 8-11. Debug State Control Register 3 (DBGSCR3)

Read: If COMRV[1:0] = 10

Write: If COMRV[1:0] = 10 and DBG is not armed.

This register is visible at 0x0027 only with COMRV[1:0] = 10. The state control register three selects the targeted next state whilst in State3. The matches refer to the match channels of the comparator match control logic as depicted in Figure 8-1 and described in Section 8.3.2.8.1, “Debug Comparator Control Register (DBGXCTL). Comparators must be enabled by setting the comparator enable bit in the associated DBGXCTL control register.

Table 8-19. DBGSCR3 Field Descriptions

Field	Description
3–0 SC[3:0]	These bits select the targeted next state whilst in State3, based upon the match event.

Table 8-20. State3 — Sequencer Next State Selection

SC[3:0]	Description (Unspecified matches have no effect)
0000	Match0 to State1

Table 8-20. State3 — Sequencer Next State Selection

SC[3:0]	Description (Unspecified matches have no effect)
0001	Match2 to State2..... Match1 to Final State
0010	Match0 to Final State..... Match1 to State1
0011	Match1 to Final State..... Match2 to State1
0100	Match1 to State2
0101	Match1 to Final State
0110	Match2 to State2..... Match0 to Final State
0111	Match0 to Final State
1000	Reserved
1001	Reserved
1010	Either Match1 or Match2 to State1..... Match0 to Final State
1011	Reserved
1100	Reserved
1101	Either Match1 or Match2 to Final State..... Match0 to State1
1110	Match0 to State2..... Match2 to Final State
1111	Reserved

The priorities described in Table 8-36 dictate that in the case of simultaneous matches, a match leading to final state has priority followed by the match on the lower channel number (0,1,2).

8.3.2.7.4 Debug Match Flag Register (DBGMFR)

Address: 0x0027

	7	6	5	4	3	2	1	0
R	0	0	0	0	0	MC2	MC1	MC0
W								
Reset	0	0	0	0	0	0	0	0

= Unimplemented or Reserved

Figure 8-12. Debug Match Flag Register (DBGMFR)

Read: If COMRV[1:0] = 11

Write: Never

DBGMFR is visible at 0x0027 only with COMRV[1:0] = 11. It features 3 flag bits each mapped directly to a channel. Should a match occur on the channel during the debug session, then the corresponding flag is set and remains set until the next time the module is armed by writing to the ARM bit. Thus the contents are retained after a debug session for evaluation purposes. These flags cannot be cleared by software, they are cleared only when arming the module. A set flag does not inhibit the setting of other flags. Once a flag is set, further comparator matches on the same channel in the same session have no affect on that flag.

8.3.2.8 Comparator Register Descriptions

Each comparator has a bank of registers that are visible through an 8-byte window in the DBG module register address map. Comparator A consists of 8 register bytes (3 address bus compare registers, two data bus compare registers, two data bus mask registers and a control register). Comparator B consists of four

register bytes (three address bus compare registers and a control register). Comparator C consists of four register bytes (three address bus compare registers and a control register).

Each set of comparator registers can be accessed using the COMRV bits in the DBGC1 register. Unimplemented registers (e.g. Comparator B data bus and data bus masking) read as zero and cannot be written. The control register for comparator B differs from those of comparators A and C.

Table 8-21. Comparator Register Layout

0x0028	CONTROL	Read/Write	Comparators A,B and C
0x0029	ADDRESS HIGH	Read/Write	Comparators A,B and C
0x002A	ADDRESS MEDIUM	Read/Write	Comparators A,B and C
0x002B	ADDRESS LOW	Read/Write	Comparators A,B and C
0x002C	DATA HIGH COMPARATOR	Read/Write	Comparator A only
0x002D	DATA LOW COMPARATOR	Read/Write	Comparator A only
0x002E	DATA HIGH MASK	Read/Write	Comparator A only
0x002F	DATA LOW MASK	Read/Write	Comparator A only

8.3.2.8.1 Debug Comparator Control Register (DBGXCTL)

The contents of this register bits 7 and 6 differ depending upon which comparator registers are visible in the 8-byte window of the DBG module register address map.

Address: 0x0028

	7	6	5	4	3	2	1	0
R W	SZE	SZ	TAG	BRK	RW	RWE	NDB	COMPE
Reset	0	0	0	0	0	0	0	0

= Unimplemented or Reserved

Figure 8-13. Debug Comparator Control Register DBGACTL (Comparator A)

Address: 0x0028

	7	6	5	4	3	2	1	0
R W	SZE	SZ	TAG	BRK	RW	RWE	0	COMPE
Reset	0	0	0	0	0	0	0	0

= Unimplemented or Reserved

Figure 8-14. Debug Comparator Control Register DBGBCTL (Comparator B)

Address: 0x0028

	7	6	5	4	3	2	1	0
R W	0	0	TAG	BRK	RW	RWE	0	COMPE
Reset	0	0	0	0	0	0	0	0

= Unimplemented or Reserved

Figure 8-15. Debug Comparator Control Register DBGCCTL (Comparator C)

Read: DBGACTL if COMRV[1:0] = 00
DBGBCTL if COMRV[1:0] = 01
DBGCCTL if COMRV[1:0] = 10

Write: DBGACTL if COMRV[1:0] = 00 and DBG not armed
DBGBCTL if COMRV[1:0] = 01 and DBG not armed
DBGCCTL if COMRV[1:0] = 10 and DBG not armed

Table 8-22. DBGXCTL Field Descriptions

Field	Description
7 SZE (Comparators A and B)	**Size Comparator Enable Bit** — The SZE bit controls whether access size comparison is enabled for the associated comparator. This bit is ignored if the TAG bit in the same register is set. 0 Word/Byte access size is not used in comparison 1 Word/Byte access size is used in comparison
6 SZ (Comparators A and B)	**Size Comparator Value Bit** — The SZ bit selects either word or byte access size in comparison for the associated comparator. This bit is ignored if the SZE bit is cleared or if the TAG bit in the same register is set. 0 Word access size is compared 1 Byte access size is compared
5 TAG	**Tag Select**— This bit controls whether the comparator match has immediate effect, causing an immediate state sequencer transition or tag the opcode at the matched address. Tagged opcodes trigger only if they reach the execution stage of the instruction queue. 0 Allow state sequencer transition immediately on match 1 On match, tag the opcode. If the opcode is about to be executed allow a state sequencer transition
4 BRK	**Break**— This bit controls whether a comparator match terminates a debug session immediately, independent of state sequencer state. To generate an immediate breakpoint the module breakpoints must be enabled using the DBGC1 bit DBGBRK. 0 The debug session termination is dependent upon the state sequencer and trigger conditions. 1 A match on this channel terminates the debug session immediately; breakpoints if active are generated, tracing, if active, is terminated and the module disarmed.
3 RW	**Read/Write Comparator Value Bit** — The RW bit controls whether read or write is used in compare for the associated comparator. The RW bit is not used if RWE = 0. This bit is ignored if the TAG bit in the same register is set. 0 Write cycle is matched1Read cycle is matched
2 RWE	**Read/Write Enable Bit** — The RWE bit controls whether read or write comparison is enabled for the associated comparator.This bit is ignored if the TAG bit in the same register is set 0 Read/Write is not used in comparison 1 Read/Write is used in comparison
1 NDB (Comparator A)	**Not Data Bus** — The NDB bit controls whether the match occurs when the data bus matches the comparator register value or when the data bus differs from the register value. This bit is ignored if the TAG bit in the same register is set. This bit is only available for comparator A. 0 Match on data bus equivalence to comparator register contents 1 Match on data bus difference to comparator register contents
0 COMPE	Determines if comparator is enabled 0 The comparator is not enabled 1 The comparator is enabled

Table 8-23 shows the effect for RWE and RW on the comparison conditions. These bits are ignored if the corresponding TAG bit is set since the match occurs based on the tagged opcode reaching the execution stage of the instruction queue.

Table 8-23. Read or Write Comparison Logic Table

RWE Bit	RW Bit	RW Signal	Comment
0	x	0	RW not used in comparison
0	x	1	RW not used in comparison
1	0	0	Write data bus
1	0	1	No match
1	1	0	No match
1	1	1	Read data bus

8.3.2.8.2 Debug Comparator Address High Register (DBGXAH)

Address: 0x0029

	7	6	5	4	3	2	1	0
R	0	0	0	0	0	0	Bit 17	Bit 16
W								
Reset	0	0	0	0	0	0	0	0

= Unimplemented or Reserved

Figure 8-16. Debug Comparator Address High Register (DBGXAH)

The DBGC1_COMRV bits determine which comparator address registers are visible in the 8-byte window from 0x0028 to 0x002F as shown in Section Table 8-24., “Comparator Address Register Visibility

Table 8-24. Comparator Address Register Visibility

COMRV	Visible Comparator
00	DBGAAH, DBGAAM, DBGAAL
01	DBGBAH, DBGBAM, DBGBAL
10	DBGCAH, DBGCAM, DBGCAL
11	None

Read: Anytime. See Table 8-24 for visible register encoding.

Write: If DBG not armed. See Table 8-24 for visible register encoding.

Table 8-25. DBGXAH Field Descriptions

Field	Description
1–0 Bit[17:16]	**Comparator Address High Compare Bits** — The Comparator address high compare bits control whether the selected comparator compares the address bus bits [17:16] to a logic one or logic zero. 0 Compare corresponding address bit to a logic zero 1 Compare corresponding address bit to a logic one

8.3.2.8.3 Debug Comparator Address Mid Register (DBGXAM)

Address: 0x002A

	7	6	5	4	3	2	1	0
R W	Bit 15	Bit 14	Bit 13	Bit 12	Bit 11	Bit 10	Bit 9	Bit 8
Reset	0	0	0	0	0	0	0	0

Figure 8-17. Debug Comparator Address Mid Register (DBGXAM)

Read: Anytime. See Table 8-24 for visible register encoding.

Write: If DBG not armed. See Table 8-24 for visible register encoding.

Table 8-26. DBGXAM Field Descriptions

Field	Description
7–0 Bit[15:8]	**Comparator Address Mid Compare Bits** — The Comparator address mid compare bits control whether the selected comparator compares the address bus bits [15:8] to a logic one or logic zero. 0 Compare corresponding address bit to a logic zero 1 Compare corresponding address bit to a logic one

8.3.2.8.4 Debug Comparator Address Low Register (DBGXAL)

Address: 0x002B

	7	6	5	4	3	2	1	0
R W	Bit 7	Bit 6	Bit 5	Bit 4	Bit 3	Bit 2	Bit 1	Bit 0
Reset	0	0	0	0	0	0	0	0

Figure 8-18. Debug Comparator Address Low Register (DBGXAL)

Read: Anytime. See Table 8-24 for visible register encoding.

Write: If DBG not armed. See Table 8-24 for visible register encoding.

Table 8-27. DBGXAL Field Descriptions

Field	Description
7–0 Bits[7:0]	**Comparator Address Low Compare Bits** — The Comparator address low compare bits control whether the selected comparator compares the address bus bits [7:0] to a logic one or logic zero. 0 Compare corresponding address bit to a logic zero 1 Compare corresponding address bit to a logic one

8.3.2.8.5 Debug Comparator Data High Register (DBGADH)

Address: 0x002C

	7	6	5	4	3	2	1	0
R W	Bit 15	Bit 14	Bit 13	Bit 12	Bit 11	Bit 10	Bit 9	Bit 8
Reset	0	0	0	0	0	0	0	0

Figure 8-19. Debug Comparator Data High Register (DBGADH)

Read: If COMRV[1:0] = 00

Write: If COMRV[1:0] = 00 and DBG not armed.

Table 8-28. DBGADH Field Descriptions

Field	Description
7–0 Bits[15:8]	**Comparator Data High Compare Bits**— The Comparator data high compare bits control whether the selected comparator compares the data bus bits [15:8] to a logic one or logic zero. The comparator data compare bits are only used in comparison if the corresponding data mask bit is logic 1. This register is available only for comparator A. Data bus comparisons are only performed if the TAG bit in DBGACTL is clear. 0 Compare corresponding data bit to a logic zero 1 Compare corresponding data bit to a logic one

8.3.2.8.6 Debug Comparator Data Low Register (DBGADL)

Address: 0x002D

	7	6	5	4	3	2	1	0
R W	Bit 7	Bit 6	Bit 5	Bit 4	Bit 3	Bit 2	Bit 1	Bit 0
Reset	0	0	0	0	0	0	0	0

Figure 8-20. Debug Comparator Data Low Register (DBGADL)

Read: If COMRV[1:0] = 00

Write: If COMRV[1:0] = 00 and DBG not armed.

Table 8-29. DBGADL Field Descriptions

Field	Description
7–0 Bits[7:0]	**Comparator Data Low Compare Bits** — The Comparator data low compare bits control whether the selected comparator compares the data bus bits [7:0] to a logic one or logic zero. The comparator data compare bits are only used in comparison if the corresponding data mask bit is logic 1. This register is available only for comparator A. Data bus comparisons are only performed if the TAG bit in DBGACTL is clear 0 Compare corresponding data bit to a logic zero 1 Compare corresponding data bit to a logic one

8.3.2.8.7 Debug Comparator Data High Mask Register (DBGADHM)

Address: 0x002E

	7	6	5	4	3	2	1	0
R W	Bit 15	Bit 14	Bit 13	Bit 12	Bit 11	Bit 10	Bit 9	Bit 8
Reset	0	0	0	0	0	0	0	0

Figure 8-21. Debug Comparator Data High Mask Register (DBGADHM)

Read: If COMRV[1:0] = 00

Write: If COMRV[1:0] = 00 and DBG not armed.

Table 8-30. DBGADHM Field Descriptions

Field	Description
7–0 Bits[15:8]	**Comparator Data High Mask Bits** — The Comparator data high mask bits control whether the selected comparator compares the data bus bits [15:8] to the corresponding comparator data compare bits. Data bus comparisons are only performed if the TAG bit in DBGACTL is clear 0 Do not compare corresponding data bit Any value of corresponding data bit allows match. 1 Compare corresponding data bit

8.3.2.8.8 Debug Comparator Data Low Mask Register (DBGADLM)

Address: 0x002F

	7	6	5	4	3	2	1	0
R W	Bit 7	Bit 6	Bit 5	Bit 4	Bit 3	Bit 2	Bit 1	Bit 0
Reset	0	0	0	0	0	0	0	0

Figure 8-22. Debug Comparator Data Low Mask Register (DBGADLM)

Read: If COMRV[1:0] = 00

Write: If COMRV[1:0] = 00 and DBG not armed.

Table 8-31. DBGADLM Field Descriptions

Field	Description
7–0 Bits[7:0]	**Comparator Data Low Mask Bits** — The Comparator data low mask bits control whether the selected comparator compares the data bus bits [7:0] to the corresponding comparator data compare bits. Data bus comparisons are only performed if the TAG bit in DBGACTL is clear 0 Do not compare corresponding data bit. Any value of corresponding data bit allows match 1 Compare corresponding data bit

8.4 Functional Description

This section provides a complete functional description of the DBG module. If the part is in secure mode, the DBG module can generate breakpoints but tracing is not possible.

8.4.1 S12SDBG Operation

Arming the DBG module by setting ARM in DBGC1 allows triggering the state sequencer, storing of data in the trace buffer and generation of breakpoints to the CPU. The DBG module is made up of four main blocks, the comparators, control logic, the state sequencer, and the trace buffer.

The comparators monitor the bus activity of the CPU. All comparators can be configured to monitor address bus activity. Comparator A can also be configured to monitor databus activity and mask out individual data bus bits during a compare. Comparators can be configured to use R/W and word/byte access qualification in the comparison. A match with a comparator register value can initiate a state sequencer transition to another state (see Figure 8-24). Either forced or tagged matches are possible. Using a forced match, a state sequencer transition can occur immediately on a successful match of system busses and comparator registers. Whilst tagging, at a comparator match, the instruction opcode is tagged and only if the instruction reaches the execution stage of the instruction queue can a state sequencer transition occur. In the case of a transition to Final State, bus tracing is triggered and/or a breakpoint can be generated.

A state sequencer transition to final state (with associated breakpoint, if enabled) can be initiated by writing to the TRIG bit in the DBGC1 control register.

The trace buffer is visible through a 2-byte window in the register address map and must be read out using standard 16-bit word reads.

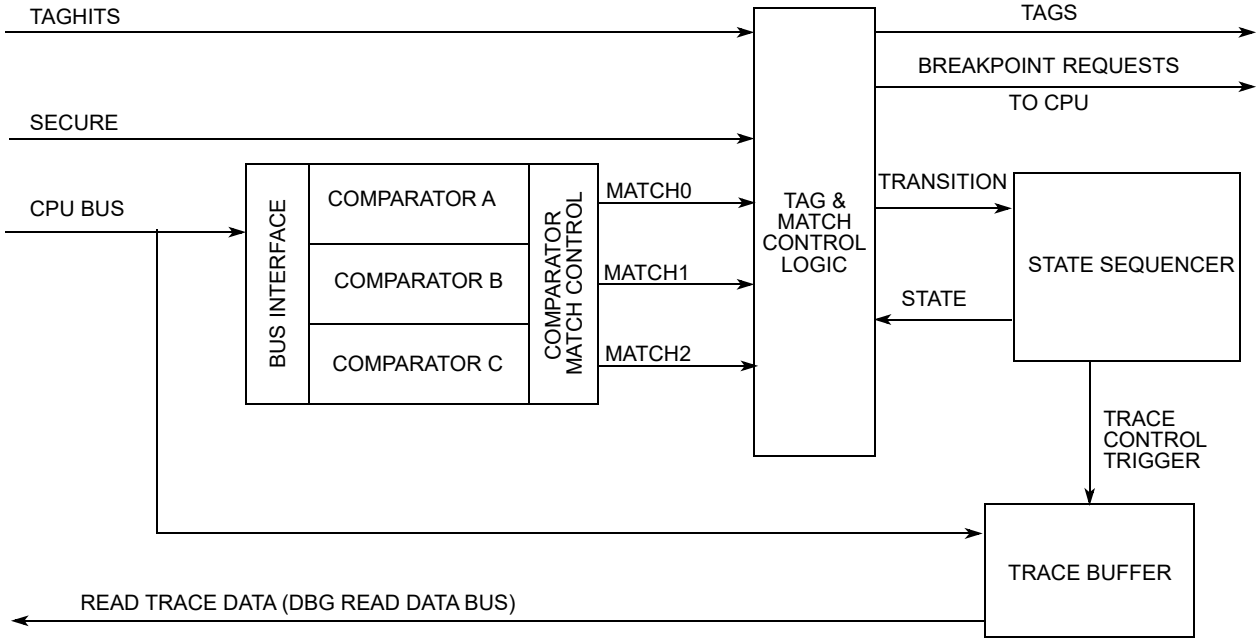

Figure 8-23. DBG Overview

8.4.2 Comparator Modes

The DBG contains three comparators, A, B and C. Each comparator compares the system address bus with the address stored in DBGXAH, DBGXAM, and DBGXAL. Furthermore, comparator A also compares the data buses to the data stored in DBGADH, DBGADL and allows masking of individual data bus bits.

All comparators are disabled in BDM and during BDM accesses.

The comparator match control logic (see Figure 8-23) configures comparators to monitor the buses for an exact address or an address range, whereby either an access inside or outside the specified range generates a match condition. The comparator configuration is controlled by the control register contents and the range control by the DBGC2 contents.

A match can initiate a transition to another state sequencer state (see Section 8.4.4, “State Sequence Control”). The comparator control register also allows the type of access to be included in the comparison through the use of the RWE, RW, SZE, and SZ bits. The RWE bit controls whether read or write comparison is enabled for the associated comparator and the RW bit selects either a read or write access for a valid match. Similarly the SZE and SZ bits allow the size of access (word or byte) to be considered in the compare. Only comparators A and B feature SZE and SZ.

The TAG bit in each comparator control register is used to determine the match condition. By setting TAG, the comparator qualifies a match with the output of opcode tracking logic and a state sequencer transition occurs when the tagged instruction reaches the CPU execution stage. Whilst tagging the RW, RWE, SZE, and SZ bits and the comparator data registers are ignored; the comparator address register must be loaded with the exact opcode address.

If the TAG bit is clear (forced type match) a comparator match is generated when the selected address appears on the system address bus. If the selected address is an opcode address, the match is generated when the opcode is fetched from the memory, which precedes the instruction execution by an indefinite number of cycles due to instruction pipelining. For a comparator match of an opcode at an odd address when TAG = 0, the corresponding even address must be contained in the comparator register. Thus for an opcode at odd address (n), the comparator register must contain address (n–1).

Once a successful comparator match has occurred, the condition that caused the original match is not verified again on subsequent matches. Thus if a particular data value is verified at a given address, this address may not still contain that data value when a subsequent match occurs.

Match[0, 1, 2] map directly to Comparators [A, B, C] respectively, except in range modes (see Section 8.3.2.4, “Debug Control Register2 (DBGC2)). Comparator channel priority rules are described in the priority section (Section 8.4.3.4, “Channel Priorities).

8.4.2.1 Single Address Comparator Match

With range comparisons disabled, the match condition is an exact equivalence of address bus with the value stored in the comparator address registers. Further qualification of the type of access (R/W, word/byte) and databus contents is possible, depending on comparator channel.

8.4.2.1.1 Comparator C

Comparator C offers only address and direction (R/W) comparison. The exact address is compared, thus with the comparator address register loaded with address (n) a word access of address (n–1) also accesses (n) but does not cause a match.

Table 8-32. Comparator C Access Considerations

Condition For Valid Match	Comp C Address	RWE	RW	Examples
Read and write accesses of ADDR[n]	ADDR[n][1]	0	X	LDAA ADDR[n] STAA #$BYTE ADDR[n]
Write accesses of ADDR[n]	ADDR[n]	1	0	STAA #$BYTE ADDR[n]
Read accesses of ADDR[n]	ADDR[n]	1	1	LDAA #$BYTE ADDR[n]

1 A word access of ADDR[n-1] also accesses ADDR[n] but does not generate a match. The comparator address register must contain the exact address from the code.

8.4.2.1.2 Comparator B

Comparator B offers address, direction (R/W) and access size (word/byte) comparison. If the SZE bit is set the access size (word or byte) is compared with the SZ bit value such that only the specified size of access causes a match. Thus if configured for a byte access of a particular address, a word access covering the same address does not lead to match.

Assuming the access direction is not qualified (RWE=0), for simplicity, the size access considerations are shown in Table 8-33.

Table 8-33. Comparator B Access Size Considerations

Condition For Valid Match	Comp B Address	RWE	SZE	SZ8	Examples
Word and byte accesses of ADDR[n]	ADDR[n][1]	0	0	X	MOVB #$BYTE ADDR[n] MOVW #$WORD ADDR[n]
Word accesses of ADDR[n] only	ADDR[n]	0	1	0	MOVW #$WORD ADDR[n] LDD ADDR[n]
Byte accesses of ADDR[n] only	ADDR[n]	0	1	1	MOVB #$BYTE ADDR[n] LDAB ADDR[n]

1 A word access of ADDR[n-1] also accesses ADDR[n] but does not generate a match. The comparator address register must contain the exact address from the code.

Access direction can also be used to qualify a match for Comparator B in the same way as described for Comparator C in Table 8-32.

8.4.2.1.3 Comparator A

Comparator A offers address, direction (R/W), access size (word/byte) and data bus comparison.

Table 8-34 lists access considerations with data bus comparison. On word accesses the data byte of the lower address is mapped to DBGADH. Access direction can also be used to qualify a match for Comparator A in the same way as described for Comparator C in Table 8-32.

Table 8-34. Comparator A Matches When Accessing ADDR[n]

SZE	SZ	DBGADHM, DBGADLM	Access DH=DBGADH, DL=DBGADL	Comment
0	X	$0000	Byte Word	No databus comparison

SZE	SZ	DBGADHM, DBGADLM	Access DH=DBGADH, DL=DBGADL	Comment
0	X	$FF00	Byte, data(ADDR[n])=DH Word, data(ADDR[n])=DH, data(ADDR[n+1])=X	Match data(ADDR[n])
0	X	$00FF	Word, data(ADDR[n])=X, data(ADDR[n+1])=DL	Match data(ADDR[n+1])
0	X	$00FF	Byte, data(ADDR[n])=X, data(ADDR[n+1])=DL	Possible unintended match
0	X	$FFFF	Word, data(ADDR[n])=DH, data(ADDR[n+1])=DL	Match data(ADDR[n], ADDR[n+1])
0	X	$FFFF	Byte, data(ADDR[n])=DH, data(ADDR[n+1])=DL	Possible unintended match
1	0	$0000	Word	No databus comparison
1	0	$00FF	Word, data(ADDR[n])=X, data(ADDR[n+1])=DL	Match only data at ADDR[n+1]
1	0	$FF00	Word, data(ADDR[n])=DH, data(ADDR[n+1])=X	Match only data at ADDR[n]
1	0	$FFFF	Word, data(ADDR[n])=DH, data(ADDR[n+1])=DL	Match data at ADDR[n] & ADDR[n+1]
1	1	$0000	Byte	No databus comparison
1	1	$FF00	Byte, data(ADDR[n])=DH	Match data at ADDR[n]

8.4.2.1.4 Comparator A Data Bus Comparison NDB Dependency

Comparator A features an NDB control bit, which allows data bus comparators to be configured to either trigger on equivalence or trigger on difference. This allows monitoring of a difference in the contents of an address location from an expected value.

When matching on an equivalence (NDB=0), each individual data bus bit position can be masked out by clearing the corresponding mask bit (DBGADHM/DBGADLM) so that it is ignored in the comparison. A match occurs when all data bus bits with corresponding mask bits set are equivalent. If all mask register bits are clear, then a match is based on the address bus only, the data bus is ignored.

When matching on a difference, mask bits can be cleared to ignore bit positions. A match occurs when any data bus bit with corresponding mask bit set is different. Clearing all mask bits, causes all bits to be ignored and prevents a match because no difference can be detected. In this case address bus equivalence does not cause a match.

Table 8-35. NDB and MASK bit dependency

NDB	DBGADHM[n] / DBGADLM[n]	Comment
0	0	Do not compare data bus bit.
0	1	Compare data bus bit. Match on equivalence.
1	0	Do not compare data bus bit.
1	1	Compare data bus bit. Match on difference.

8.4.2.2 Range Comparisons

Using the AB comparator pair for a range comparison, the data bus can also be used for qualification by using the comparator A data registers. Furthermore the DBGACTL RW and RWE bits can be used to qualify the range comparison on either a read or a write access. The corresponding DBGBCTL bits are ignored. The SZE and SZ control bits are ignored in range mode. The comparator A TAG bit is used to tag

range comparisons. The comparator B TAG bit is ignored in range modes. In order for a range comparison using comparators A and B, both COMPEA and COMPEB must be set; to disable range comparisons both must be cleared. The comparator A BRK bit is used to for the AB range, the comparator B BRK bit is ignored in range mode.

When configured for range comparisons and tagging, the ranges are accurate only to word boundaries.

8.4.2.2.1 Inside Range (CompA_Addr ≤ address ≤ CompB_Addr)

In the Inside Range comparator mode, comparator pair A and B can be configured for range comparisons. This configuration depends upon the control register (DBGC2). The match condition requires that a valid match for both comparators happens on the same bus cycle. A match condition on only one comparator is not valid. An aligned word access which straddles the range boundary is valid only if the aligned address is inside the range.

8.4.2.2.2 Outside Range (address < CompA_Addr or address > CompB_Addr)

In the Outside Range comparator mode, comparator pair A and B can be configured for range comparisons. A single match condition on either of the comparators is recognized as valid. An aligned word access which straddles the range boundary is valid only if the aligned address is outside the range.

Outside range mode in combination with tagging can be used to detect if the opcode fetches are from an unexpected range. In forced match mode the outside range match would typically be activated at any interrupt vector fetch or register access. This can be avoided by setting the upper range limit to $3FFFF or lower range limit to $00000 respectively.

8.4.3 Match Modes (Forced or Tagged)

Match modes are used as qualifiers for a state sequencer change of state. The Comparator control register TAG bits select the match mode. The modes are described in the following sections.

8.4.3.1 Forced Match

When configured for forced matching, a comparator channel match can immediately initiate a transition to the next state sequencer state whereby the corresponding flags in DBGSR are set. The state control register for the current state determines the next state. Forced matches are typically generated 2-3 bus cycles after the final matching address bus cycle, independent of comparator RWE/RW settings. Furthermore since opcode fetches occur several cycles before the opcode execution a forced match of an opcode address typically precedes a tagged match at the same address.

8.4.3.2 Tagged Match

If a CPU taghit occurs a transition to another state sequencer state is initiated and the corresponding DBGSR flags are set. For a comparator related taghit to occur, the DBG must first attach tags to instructions as they are fetched from memory. When the tagged instruction reaches the execution stage of the instruction queue a taghit is generated by the CPU. This can initiate a state sequencer transition.

8.4.3.3 Immediate Trigger

Independent of comparator matches it is possible to initiate a tracing session and/or breakpoint by writing to the TRIG bit in DBGC1. If configured for begin aligned tracing, this triggers the state sequencer into the Final State, if configured for end alignment, setting the TRIG bit disarms the module, ending the session and issues a forced breakpoint request to the CPU.

It is possible to set both TRIG and ARM simultaneously to generate an immediate trigger, independent of the current state of ARM.

8.4.3.4 Channel Priorities

In case of simultaneous matches the priority is resolved according to Table 8-36. The lower priority is suppressed. It is thus possible to miss a lower priority match if it occurs simultaneously with a higher priority. The priorities described in Table 8-36 dictate that in the case of simultaneous matches, the match pointing to final state has highest priority followed by the lower channel number (0,1,2).

Table 8-36. Channel Priorities

Priority	Source	Action
Highest	TRIG	Enter Final State
	Channel pointing to Final State	Transition to next state as defined by state control registers
	Match0 (force or tag hit)	Transition to next state as defined by state control registers
	Match1 (force or tag hit)	Transition to next state as defined by state control registers
Lowest	Match2 (force or tag hit)	Transition to next state as defined by state control registers

8.4.4 State Sequence Control

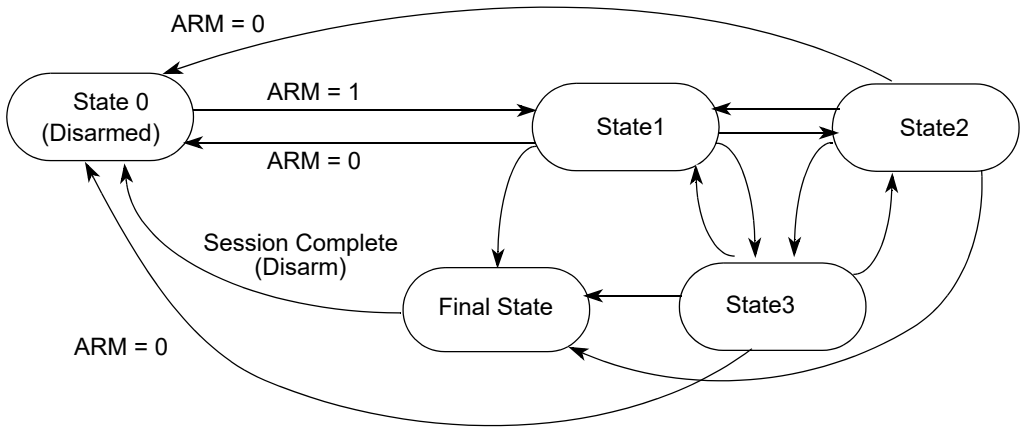

Figure 8-24. State Sequencer Diagram

The state sequencer allows a defined sequence of events to provide a trigger point for tracing of data in the trace buffer. Once the DBG module has been armed by setting the ARM bit in the DBGC1 register, then state1 of the state sequencer is entered. Further transitions between the states are then controlled by the state control registers and channel matches. From Final State the only permitted transition is back to the

disarmed state0. Transition between any of the states 1 to 3 is not restricted. Each transition updates the SSF[2:0] flags in DBGSR accordingly to indicate the current state.

Alternatively writing to the TRIG bit in DBGSC1, provides an immediate trigger independent of comparator matches.

Independent of the state sequencer, each comparator channel can be individually configured to generate an immediate breakpoint when a match occurs through the use of the BRK bits in the DBGxCTL registers. Thus it is possible to generate an immediate breakpoint on selected channels, whilst a state sequencer transition can be initiated by a match on other channels. If a debug session is ended by a match on a channel the state sequencer transitions through Final State for a clock cycle to state0. This is independent of tracing and breakpoint activity, thus with tracing and breakpoints disabled, the state sequencer enters state0 and the debug module is disarmed.

8.4.4.1 Final State

On entering Final State a trigger may be issued to the trace buffer according to the trace alignment control as defined by the TALIGN bit (see Section 8.3.2.3, “Debug Trace Control Register (DBGTCR)”). If the TSOURCE bit in DBGTCR is clear then the trace buffer is disabled and the transition to Final State can only generate a breakpoint request. In this case or upon completion of a tracing session when tracing is enabled, the ARM bit in the DBGC1 register is cleared, returning the module to the disarmed state0. If tracing is enabled a breakpoint request can occur at the end of the tracing session. If neither tracing nor breakpoints are enabled then when the final state is reached it returns automatically to state0 and the debug module is disarmed.

8.4.5 Trace Buffer Operation

The trace buffer is a 64 lines deep by 20-bits wide RAM array. The DBG module stores trace information in the RAM array in a circular buffer format. The system accesses the RAM array through a register window (DBGTBH:DBGTBL) using 16-bit wide word accesses. After each complete 20-bit trace buffer line is read, an internal pointer into the RAM increments so that the next read receives fresh information. Data is stored in the format shown in Table 8-37 and Table 8-40. After each store the counter register DBGCNT is incremented. Tracing of CPU activity is disabled when the BDM is active. Reading the trace buffer whilst the DBG is armed returns invalid data and the trace buffer pointer is not incremented.

8.4.5.1 Trace Trigger Alignment

Using the TALIGN bit (see Section 8.3.2.3, “Debug Trace Control Register (DBGTCR)) it is possible to align the trigger with the end or the beginning of a tracing session.

If end alignment is selected, tracing begins when the ARM bit in DBGC1 is set and State1 is entered; the transition to Final State signals the end of the tracing session. Tracing with Begin-Trigger starts at the opcode of the trigger. Using end alignment or when the tracing is initiated by writing to the TRIG bit whilst configured for begin alignment, tracing starts in the second cycle after the DBGC1 write cycle.

8.4.5.1.1 Storing with Begin Trigger Alignment

Storing with begin alignment, data is not stored in the Trace Buffer until the Final State is entered. Once the trigger condition is met the DBG module remains armed until 64 lines are stored in the Trace Buffer. If the trigger is at the address of the change-of-flow instruction the change of flow associated with the trigger is stored in the Trace Buffer. Using begin alignment together with tagging, if the tagged instruction is about to be executed then the trace is started. Upon completion of the tracing session the breakpoint is generated, thus the breakpoint does not occur at the tagged instruction boundary.

8.4.5.1.2 Storing with End Trigger Alignment

Storing with end alignment, data is stored in the Trace Buffer until the Final State is entered, at which point the DBG module becomes disarmed and no more data is stored. If the trigger is at the address of a change of flow instruction, the trigger event is not stored in the Trace Buffer. If all trace buffer lines have been used before a trigger event occurrs then the trace continues at the first line, overwriting the oldest entries.

8.4.5.2 Trace Modes

Four trace modes are available. The mode is selected using the TRCMOD bits in the DBGTCR register. Tracing is enabled using the TSOURCE bit in the DBGTCR register. The modes are described in the following subsections.

8.4.5.2.1 Normal Mode

In Normal Mode, change of flow (COF) program counter (PC) addresses are stored.

COF addresses are defined as follows:

- Source address of taken conditional branches (long, short, bit-conditional, and loop primitives)
- Destination address of indexed JMP, JSR, and CALL instruction
- Destination address of RTI, RTS, and RTC instructions
- Vector address of interrupts, except for BDM vectors

LBRA, BRA, BSR, BGND as well as non-indexed JMP, JSR, and CALL instructions are not classified as change of flow and are not stored in the trace buffer.

Stored information includes the full 18-bit address bus and information bits, which contains a source/destination bit to indicate whether the stored address was a source address or destination address.

NOTE

When a COF instruction with destination address is executed, the destination address is stored to the trace buffer on instruction completion, indicating the COF has taken place. If an interrupt occurs simultaneously then the next instruction carried out is actually from the interrupt service routine. The instruction at the destination address of the original program flow gets executed after the interrupt service routine.

In the following example an IRQ interrupt occurs during execution of the indexed JMP at address MARK1. The BRN at the destination (SUB_1) is not executed until after the IRQ service routine but the destination address is entered into the trace buffer to indicate that the indexed JMP COF has taken place.

```
        LDX     #SUB_1
MARK1   JMP     0,X                     ; IRQ interrupt occurs during execution of this
MARK2   NOP                             ;

SUB_1   BRN     *                       ; JMP Destination address TRACE BUFFER ENTRY 1
                                        ; RTI Destination address TRACE BUFFER ENTRY 3
        NOP                             ;
ADDR1   DBNE    A,PART5                 ; Source address TRACE BUFFER ENTRY 4

IRQ_ISR LDAB    #$F0                    ; IRQ Vector $FFF2 = TRACE BUFFER ENTRY 2
        STAB    VAR_C1
        RTI                             ;
```

The execution flow taking into account the IRQ is as follows

```
        LDX     #SUB_1
MARK1   JMP     0,X                     ;
IRQ_ISR LDAB    #$F0                    ;
        STAB    VAR_C1
        RTI                             ;
SUB_1   BRN     *
        NOP                             ;
ADDR1   DBNE    A,PART5                 ;
```

8.4.5.2.2 Loop1 Mode

Loop1 Mode, similarly to Normal Mode also stores only COF address information to the trace buffer, it however allows the filtering out of redundant information.

The intent of Loop1 Mode is to prevent the Trace Buffer from being filled entirely with duplicate information from a looping construct such as delays using the DBNE instruction or polling loops using BRSET/BRCLR instructions. Immediately after address information is placed in the Trace Buffer, the DBG module writes this value into a background register. This prevents consecutive duplicate address entries in the Trace Buffer resulting from repeated branches.

Loop1 Mode only inhibits consecutive duplicate source address entries that would typically be stored in most tight looping constructs. It does not inhibit repeated entries of destination addresses or vector addresses, since repeated entries of these would most likely indicate a bug in the user's code that the DBG module is designed to help find.

8.4.5.2.3 Detail Mode

In Detail Mode, address and data for all memory and register accesses is stored in the trace buffer. This mode is intended to supply additional information on indexed, indirect addressing modes where storing only the destination address would not provide all information required for a user to determine where the code is in error. This mode also features information bit storage to the trace buffer, for each address byte

storage. The information bits indicate the size of access (word or byte) and the type of access (read or write).

When tracing in Detail Mode, all cycles are traced except those when the CPU is either in a free or opcode fetch cycle.

8.4.5.2.4 Compressed Pure PC Mode

In Compressed Pure PC Mode, the PC addresses of all executed opcodes, including illegal opcodes are stored. A compressed storage format is used to increase the effective depth of the trace buffer. This is achieved by storing the lower order bits each time and using 2 information bits to indicate if a 64 byte boundary has been crossed, in which case the full PC is stored.

Each Trace Buffer row consists of 2 information bits and 18 PC address bits

NOTE:

When tracing is terminated using forced breakpoints, latency in breakpoint generation means that opcodes following the opcode causing the breakpoint can be stored to the trace buffer. The number of opcodes is dependent on program flow. This can be avoided by using tagged breakpoints.

8.4.5.3 Trace Buffer Organization (Normal, Loop1, Detail modes)

ADRH, ADRM, ADRL denote address high, middle and low byte respectively. The numerical suffix refers to the tracing count. The information format for Loop1 and Normal modes is identical. In Detail mode, the address and data for each entry are stored on consecutive lines, thus the maximum number of entries is 32. In this case DBGCNT bits are incremented twice, once for the address line and once for the data line, on each trace buffer entry. In Detail mode CINF comprises of R/W and size access information (CRW and CSZ respectively).

Single byte data accesses in Detail Mode are always stored to the low byte of the trace buffer (DATAL) and the high byte is cleared. When tracing word accesses, the byte at the lower address is always stored to trace buffer byte1 and the byte at the higher address is stored to byte0.

Table 8-37. Trace Buffer Organization (Normal,Loop1,Detail modes)

Mode	Entry Number	4-bits	8-bits	8-bits
		Field 2	Field 1	Field 0
Detail Mode	Entry 1	CINF1,ADRH1	ADRM1	ADRL1
		0	DATAH1	DATAL1
	Entry 2	CINF2,ADRH2	ADRM2	ADRL2
		0	DATAH2	DATAL2
Normal/Loop1 Modes	Entry 1	PCH1	PCM1	PCL1
	Entry 2	PCH2	PCM2	PCL2

8.4.5.3.1 Information Bit Organization

The format of the bits is dependent upon the active trace mode as described below.

Field2 Bits in Detail Mode

Bit 3	Bit 2	Bit 1	Bit 0
CSZ	CRW	ADDR[17]	ADDR[16]

Figure 8-25. Field2 Bits in Detail Mode

In Detail Mode the CSZ and CRW bits indicate the type of access being made by the CPU.

Table 8-38. Field Descriptions

Bit	Description
3 CSZ	**Access Type Indicator**— This bit indicates if the access was a byte or word size when tracing in Detail Mode 0 Word Access 1 Byte Access
2 CRW	**Read Write Indicator** — This bit indicates if the corresponding stored address corresponds to a read or write access when tracing in Detail Mode. 0 Write Access 1 Read Access
1 ADDR[17]	**Address Bus bit 17**— Corresponds to system address bus bit 17.
0 ADDR[16]	**Address Bus bit 16**— Corresponds to system address bus bit 16.

Field2 Bits in Normal and Loop1 Modes

Bit 3	Bit 2	Bit 1	Bit 0
CSD	CVA	PC17	PC16

Figure 8-26. Information Bits PCH

Table 8-39. PCH Field Descriptions

Bit	Description
3 CSD	**Source Destination Indicator** — In Normal and Loop1 mode this bit indicates if the corresponding stored address is a source or destination address. This bit has no meaning in Compressed Pure PC mode. 0 Source Address 1 Destination Address
2 CVA	**Vector Indicator** — In Normal and Loop1 mode this bit indicates if the corresponding stored address is a vector address. Vector addresses are destination addresses, thus if CVA is set, then the corresponding CSD is also set. This bit has no meaning in Compressed Pure PC mode. 0 Non-Vector Destination Address 1 Vector Destination Address
1 PC17	**Program Counter bit 17**— In Normal and Loop1 mode this bit corresponds to program counter bit 17.

Table 8-39. PCH Field Descriptions (continued)

Bit	Description
0 PC16	**Program Counter bit 16**— In Normal and Loop1 mode this bit corresponds to program counter bit 16.

8.4.5.4 Trace Buffer Organization (Compressed Pure PC mode)

Table 8-40. Trace Buffer Organization Example (Compressed PurePC mode)

Mode	Line Number	2-bits	6-bits	6-bits	6-bits
		Field 3	Field 2	Field 1	Field 0
Compressed Pure PC Mode	Line 1	00	PC1 (Initial 18-bit PC Base Address)		
	Line 2	11	PC4	PC3	PC2
	Line 3	01	0	0	PC5
	Line 4	00	PC6 (New 18-bit PC Base Address)		
	Line 5	10	0	PC8	PC7
	Line 6	00	PC9 (New 18-bit PC Base Address)		

NOTE

Configured for end aligned triggering in compressed PurePC mode, then after rollover it is possible that the oldest base address is overwritten. In this case all entries between the pointer and the next base address have lost their base address following rollover. For example in Table 8-40 if one line of rollover has occurred, Line 1, PC1, is overwritten with a new entry. Thus the entries on Lines 2 and 3 have lost their base address. For reconstruction of program flow the first base address following the pointer must be used, in the example, Line 4. The pointer points to the oldest entry, Line 2.

Field3 Bits in Compressed Pure PC Modes

Table 8-41. Compressed Pure PC Mode Field 3 Information Bit Encoding

INF1	INF0	TRACE BUFFER ROW CONTENT
0	0	Base PC address TB[17:0] contains a full PC[17:0] value
0	1	Trace Buffer[5:0] contain incremental PC relative to base address zero value
1	0	Trace Buffer[11:0] contain next 2 incremental PCs relative to base address zero value
1	1	Trace Buffer[17:0] contain next 3 incremental PCs relative to base address zero value

Each time that PC[17:6] differs from the previous base PC[17:6], then a new base address is stored. The base address zero value is the lowest address in the 64 address range

The first line of the trace buffer always gets a base PC address, this applies also on rollover.

8.4.5.5 Reading Data from Trace Buffer

The data stored in the Trace Buffer can be read provided the DBG module is not armed, is configured for tracing (TSOURCE bit is set) and the system not secured. When the ARM bit is written to 1 the trace buffer is locked to prevent reading. The trace buffer can only be unlocked for reading by a single aligned word write to DBGTB when the module is disarmed.

The Trace Buffer can only be read through the DBGTB register using aligned word reads, any byte or misaligned reads return 0 and do not cause the trace buffer pointer to increment to the next trace buffer address. The Trace Buffer data is read out first-in first-out. By reading CNT in DBGCNT the number of valid lines can be determined. DBGCNT does not decrement as data is read.

Whilst reading an internal pointer is used to determine the next line to be read. After a tracing session, the pointer points to the oldest data entry, thus if no rollover has occurred, the pointer points to line0, otherwise it points to the line with the oldest entry. In compressed Pure PC mode on rollover the line with the oldest data entry may also contain newer data entries in fields 0 and 1. Thus if rollover is indicated by the TBF bit, the line status must be decoded using the INF bits in field3 of that line. If both INF bits are clear then the line contains only entries from before the last rollover.
If INF0=1 then field 0 contains post rollover data but fields 1 and 2 contain pre rollover data.
If INF1=1 then fields 0 and 1 contain post rollover data but field 2 contains pre rollover data.

The pointer is initialized by each aligned write to DBGTBH to point to the oldest data again. This enables an interrupted trace buffer read sequence to be easily restarted from the oldest data entry.

The least significant word of line is read out first. This corresponds to the fields 1 and 0 of Table 8-37. The next word read returns field 2 in the least significant bits [3:0] and “0” for bits [15:4].

Reading the Trace Buffer while the DBG module is armed returns invalid data and no shifting of the RAM pointer occurs.

8.4.5.6 Trace Buffer Reset State

The Trace Buffer contents and DBGCNT bits are not initialized by a system reset. Thus should a system reset occur, the trace session information from immediately before the reset occurred can be read out and the number of valid lines in the trace buffer is indicated by DBGCNT. The internal pointer to the current trace buffer address is initialized by unlocking the trace buffer and points to the oldest valid data even if a reset occurred during the tracing session. To read the trace buffer after a reset, TSOURCE must be set, otherwise the trace buffer reads as all zeroes. Generally debugging occurrences of system resets is best handled using end trigger alignment since the reset may occur before the trace trigger, which in the begin trigger alignment case means no information would be stored in the trace buffer.

The Trace Buffer contents and DBGCNT bits are undefined following a POR.

NOTE

An external pin RESET that occurs simultaneous to a trace buffer entry can, in very seldom cases, lead to either that entry being corrupted or the first entry of the session being corrupted. In such cases the other contents of the trace buffer still contain valid tracing information. The case occurs when the reset assertion coincides with the trace buffer entry clock edge.

8.4.6 Tagging

A tag follows program information as it advances through the instruction queue. When a tagged instruction reaches the head of the queue a tag hit occurs and can initiate a state sequencer transition.

Each comparator control register features a TAG bit, which controls whether the comparator match causes a state sequencer transition immediately or tags the opcode at the matched address. If a comparator is enabled for tagged comparisons, the address stored in the comparator match address registers must be an opcode address.

Using Begin trigger together with tagging, if the tagged instruction is about to be executed then the transition to the next state sequencer state occurs. If the transition is to the Final State, tracing is started. Only upon completion of the tracing session can a breakpoint be generated. Using End alignment, when the tagged instruction is about to be executed and the next transition is to Final State then a breakpoint is generated immediately, before the tagged instruction is carried out.

R/W monitoring, access size (SZ) monitoring and data bus monitoring are not useful if tagging is selected, since the tag is attached to the opcode at the matched address and is not dependent on the data bus nor on the type of access. Thus these bits are ignored if tagging is selected.

When configured for range comparisons and tagging, the ranges are accurate only to word boundaries.

Tagging is disabled when the BDM becomes active.

8.4.7 Breakpoints

It is possible to generate breakpoints from channel transitions to final state or using software to write to the TRIG bit in the DBGC1 register.

8.4.7.1 Breakpoints From Comparator Channels

Breakpoints can be generated when the state sequencer transitions to the Final State. If configured for tagging, then the breakpoint is generated when the tagged opcode reaches the execution stage of the instruction queue.

If a tracing session is selected by the TSOURCE bit, breakpoints are requested when the tracing session has completed, thus if Begin aligned triggering is selected, the breakpoint is requested only on completion of the subsequent trace (see Table 8-42). If no tracing session is selected, breakpoints are requested immediately.

If the BRK bit is set, then the associated breakpoint is generated immediately independent of tracing trigger alignment.

Table 8-42. Breakpoint Setup For CPU Breakpoints

BRK	TALIGN	DBGBRK	Breakpoint Alignment
0	0	0	Fill Trace Buffer until trigger then disarm (no breakpoints)
0	0	1	Fill Trace Buffer until trigger, then breakpoint request occurs
0	1	0	Start Trace Buffer at trigger (no breakpoints)

Table 8-42. Breakpoint Setup For CPU Breakpoints

0	1	1	Start Trace Buffer at trigger A breakpoint request occurs when Trace Buffer is full
1	x	1	Terminate tracing and generate breakpoint immediately on trigger
1	x	0	Terminate tracing immediately on trigger

8.4.7.2 Breakpoints Generated Via The TRIG Bit

If a TRIG triggers occur, the Final State is entered whereby tracing trigger alignment is defined by the TALIGN bit. If a tracing session is selected by the TSOURCE bit, breakpoints are requested when the tracing session has completed, thus if Begin aligned triggering is selected, the breakpoint is requested only on completion of the subsequent trace (see Table 8-42). If no tracing session is selected, breakpoints are requested immediately. TRIG breakpoints are possible with a single write to DBGC1, setting ARM and TRIG simultaneously.

8.4.7.3 Breakpoint Priorities

If a TRIG trigger occurs after Begin aligned tracing has already started, then the TRIG no longer has an effect. When the associated tracing session is complete, the breakpoint occurs. Similarly if a TRIG is followed by a subsequent comparator channel match, it has no effect, since tracing has already started.

If a forced SWI breakpoint coincides with a BGND in user code with BDM enabled, then the BDM is activated by the BGND and the breakpoint to SWI is suppressed.

8.4.7.3.1 DBG Breakpoint Priorities And BDM Interfacing

Breakpoint operation is dependent on the state of the BDM module. If the BDM module is active, the CPU is executing out of BDM firmware, thus comparator matches and associated breakpoints are disabled. In addition, while executing a BDM TRACE command, tagging into BDM is disabled. If BDM is not active, the breakpoint gives priority to BDM requests over SWI requests if the breakpoint happens to coincide with a SWI instruction in user code. On returning from BDM, the SWI from user code gets executed.

Table 8-43. Breakpoint Mapping Summary

DBGBRK	BDM Bit (DBGC1[4])	BDM Enabled	BDM Active	Breakpoint Mapping
0	X	X	X	No Breakpoint
1	0	X	0	Breakpoint to SWI
X	X	1	1	No Breakpoint
1	1	0	X	Breakpoint to SWI
1	1	1	0	Breakpoint to BDM

BDM cannot be entered from a breakpoint unless the ENABLE bit is set in the BDM. If entry to BDM via a BGND instruction is attempted and the ENABLE bit in the BDM is cleared, the CPU actually executes the BDM firmware code, checks the ENABLE and returns if ENABLE is not set. If not serviced by the monitor then the breakpoint is re-asserted when the BDM returns to normal CPU flow.

If the comparator register contents coincide with the SWI/BDM vector address then an SWI in user code could coincide with a DBG breakpoint. The CPU ensures that BDM requests have a higher priority than SWI requests. Returning from the BDM/SWI service routine care must be taken to avoid a repeated breakpoint at the same address.

Should a tagged or forced breakpoint coincide with a BGND in user code, then the instruction that follows the BGND instruction is the first instruction executed when normal program execution resumes.

NOTE

When program control returns from a tagged breakpoint using an RTI or BDM GO command without program counter modification it returns to the instruction whose tag generated the breakpoint. To avoid a repeated breakpoint at the same location reconfigure the DBG module in the SWI routine, if configured for an SWI breakpoint, or over the BDM interface by executing a TRACE command before the GO to increment the program flow past the tagged instruction.

8.5 Application Information

8.5.1 State Machine scenarios

Defining the state control registers as SCR1,SCR2, SCR3 and M0,M1,M2 as matches on channels 0,1,2 respectively. SCR encoding supported by S12SDBGV1 are shown in black. SCR encoding supported only in S12SDBGV2 are shown in red. For backwards compatibility the new scenarios use a 4th bit in each SCR register. Thus the existing encoding for SCRx[2:0] is not changed.

8.5.2 Scenario 1

A trigger is generated if a given sequence of 3 code events is executed.

Figure 8-27. Scenario 1

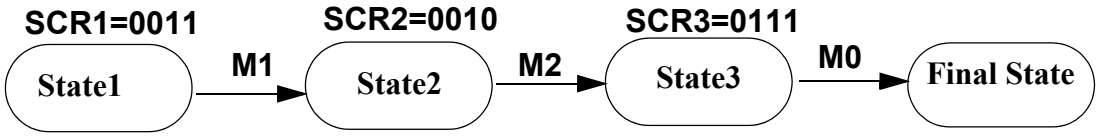

Scenario 1 is possible with S12SDBGV1 SCR encoding

8.5.3 Scenario 2

A trigger is generated if a given sequence of 2 code events is executed.

Figure 8-28. Scenario 2a



A trigger is generated if a given sequence of 2 code events is executed, whereby the first event is entry into a range (COMPA,COMPB configured for range mode). M1 is disabled in range modes.

Figure 8-29. Scenario 2b



A trigger is generated if a given sequence of 2 code events is executed, whereby the second event is entry into a range (COMPA,COMPB configured for range mode)

Figure 8-30. Scenario 2c

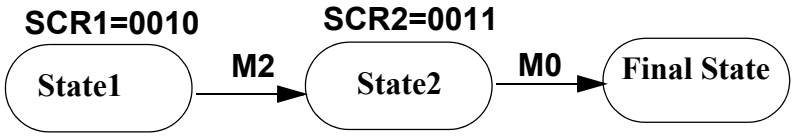

All 3 scenarios 2a,2b,2c are possible with the S12SDBGV1 SCR encoding

8.5.4 Scenario 3

A trigger is generated immediately when one of up to 3 given events occurs

Figure 8-31. Scenario 3

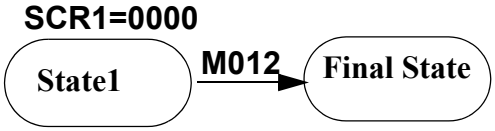

Scenario 3 is possible with S12SDBGV1 SCR encoding

8.5.5 Scenario 4

Trigger if a sequence of 2 events is carried out in an incorrect order. Event A must be followed by event B and event B must be followed by event A. 2 consecutive occurrences of event A without an intermediate

event B cause a trigger. Similarly 2 consecutive occurrences of event B without an intermediate event A cause a trigger. This is possible by using CompA and CompC to match on the same address as shown.

Figure 8-32. Scenario 4a

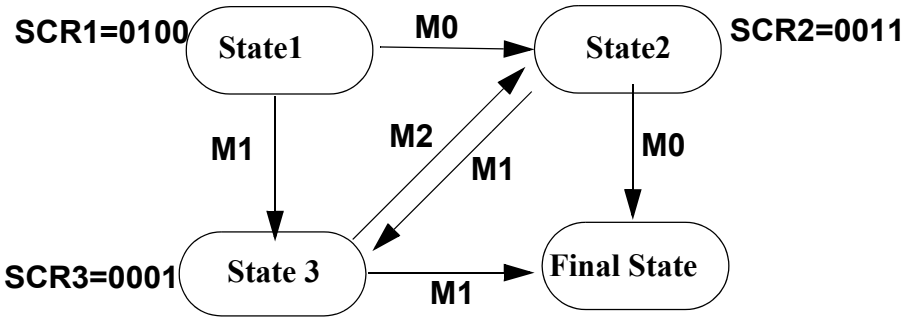

This scenario is currently not possible using 2 comparators only. S12SDBGV2 makes it possible with 2 comparators, State 3 allowing a M0 to return to state 2, whilst a M2 leads to final state as shown.

Figure 8-33. Scenario 4b (with 2 comparators)

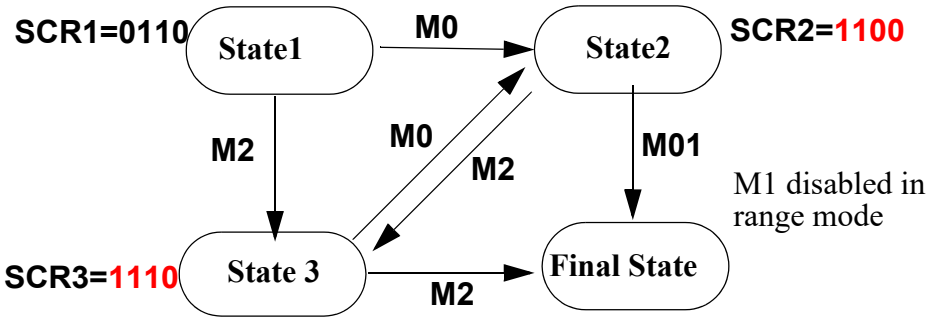

The advantage of using only 2 channels is that now range comparisons can be included (channel0)

This however violates the S12SDBGV1 specification, which states that a match leading to final state always has priority in case of a simultaneous match, whilst priority is also given to the lowest channel number. For S12SDBG the corresponding CPU priority decoder is removed to support this, such that on simultaneous taghits, taghits pointing to final state have highest priority. If no taghit points to final state then the lowest channel number has priority. Thus with the above encoding from State3, the CPU and DBG would break on a simultaneous M0/M2.

8.5.6 Scenario 5

Trigger if following event A, event C precedes event B. i.e. the expected execution flow is A->B->C.

Figure 8-34. Scenario 5



Scenario 5 is possible with the S12SDBGV1 SCR encoding

8.5.7 Scenario 6

Trigger if event A occurs twice in succession before any of 2 other events (BC) occurs. This scenario is not possible using the S12SDBGV1 SCR encoding. S12SDBGV2 includes additions shown in red. The change in SCR1 encoding also has the advantage that a State1->State3 transition using M0 is now possible. This is advantageous because range and data bus comparisons use channel0 only.

Figure 8-35. Scenario 6

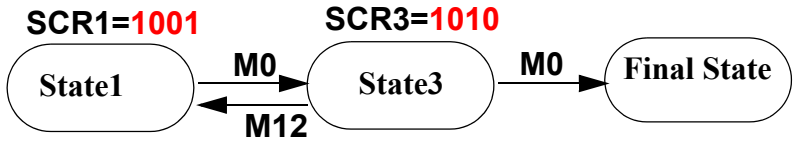

8.5.8 Scenario 7

Trigger when a series of 3 events is executed out of order. Specifying the event order as M1,M2,M0 to run in loops (120120120). Any deviation from that order should trigger. This scenario is not possible using the S12SDBGV1 SCR encoding because OR possibilities are very limited in the channel encoding. By adding OR forks as shown in red this scenario is possible.

Figure 8-36. Scenario 7

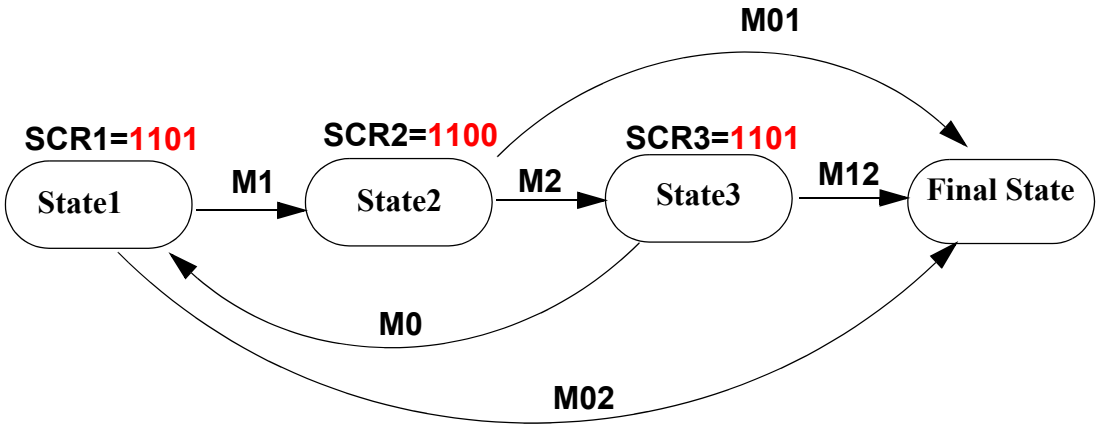

On simultaneous matches the lowest channel number has priority so with this configuration the forking from State1 has the peculiar effect that a simultaneous match0/match1 transitions to final state but a simultaneous match2/match1transitions to state2.

8.5.9 Scenario 8

Trigger when a routine/event at M2 follows either M1 or M0.

Figure 8-37. Scenario 8a



Trigger when an event M2 is followed by either event M0 or event M1

Figure 8-38. Scenario 8b



Scenario 8a and 8b are possible with the S12SDBGV1 and S12SDBGV2 SCR encoding

8.5.10 Scenario 9

Trigger when a routine/event at A (M2) does not follow either B or C (M1 or M0) before they are executed again. This cannot be realized with theS12SDBGV1 SCR encoding due to OR limitations. By changing the SCR2 encoding as shown in red this scenario becomes possible.

Figure 8-39. Scenario 9



8.5.11 Scenario 10

Trigger if an event M0 occurs following up to two successive M2 events without the resetting event M1. As shown up to 2 consecutive M2 events are allowed, whereby a reset to State1 is possible after either one or two M2 events. If an event M0 occurs following the second M2, before M1 resets to State1 then a trigger

is generated. Configuring CompA and CompC the same, it is possible to generate a breakpoint on the third consecutive occurrence of event M0 without a reset M1.

Figure 8-40. Scenario 10a

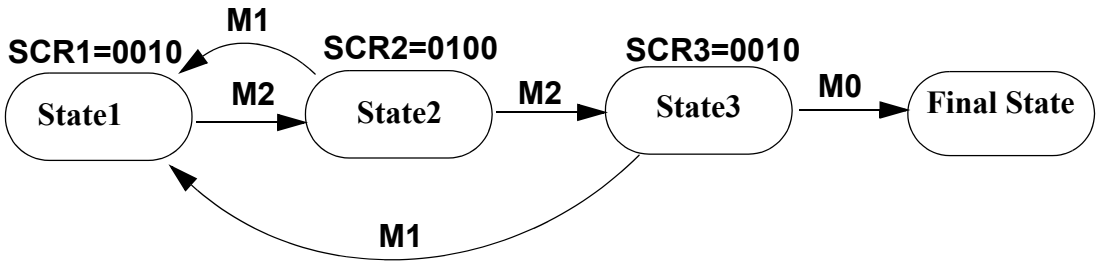

Figure 8-41. Scenario 10b

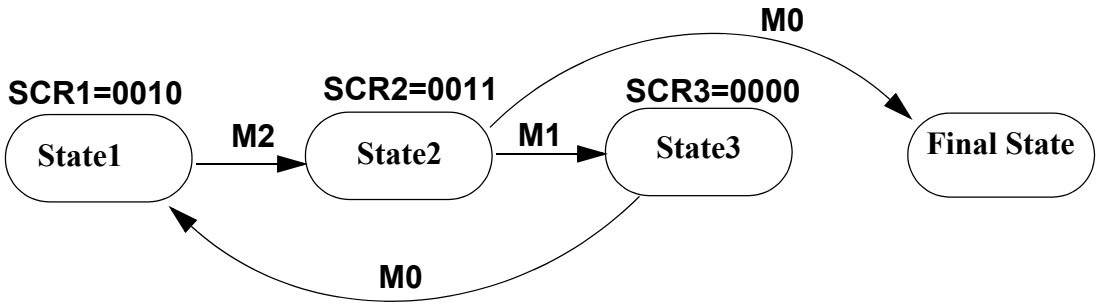

Scenario 10b shows the case that after M2 then M1 must occur before M0. Starting from a particular point in code, event M2 must always be followed by M1 before M0. If after any M2, event M0 occurs before M1 then a trigger is generated.

Chapter 9
Security (S12XS9SECV2)

Table 9-1. Revision History

Revision Number	Revision Date	Sections Affected	Description of Changes
02.00	27 Aug 2004		reviewed and updated for S12XD architecture
02.01	21 Feb 2007		added S12XE, S12XF and S12XS architectures
02.02	19 Apr 2007		corrected statement about Backdoor key access via BDM on XE, XF, XS

9.1 Introduction

This specification describes the function of the security mechanism in the MC9S12G-Family (9SEC).

NOTE

No security feature is absolutely secure. However, NXP's strategy is to make reading or copying the FLASH and/or EEPROM difficult for unauthorized users.

9.1.1 Features

The user must be reminded that part of the security must lie with the application code. An extreme example would be application code that dumps the contents of the internal memory. This would defeat the purpose of security. At the same time, the user may also wish to put a backdoor in the application program. An example of this is the user downloads a security key through the SCI, which allows access to a programming routine that updates parameters stored in another section of the Flash memory.

The security features of the MC9S12G-Family (in secure mode) are:

- Protect the content of non-volatile memories (Flash, EEPROM)
- Execution of NVM commands is restricted
- Disable access to internal memory via background debug module (BDM)

9.1.2 Modes of Operation

Table 9-2 gives an overview over availability of security relevant features in unsecure and secure modes.

Table 9-2. Feature Availability in Unsecure and Secure Modes on S12XS

	Unsecure Mode						Secure Mode					
	NS	SS	NX	ES	EX	ST	NS	SS	NX	ES	EX	ST
Flash Array Access	✓	✓					✓	✓				

Table 9-2. Feature Availability in Unsecure and Secure Modes on S12XS

	Unsecure Mode						Secure Mode					
	NS	SS	NX	ES	EX	ST	NS	SS	NX	ES	EX	ST
EEPROM Array Access	✓	✓					✓	✓				
NVM Commands	✓[1]	✓					✓[1]	✓[1]				
BDM	✓	✓					—	✓[2]				
DBG Module Trace	✓	✓					—	—				

1 Restricted NVM command set only. Please refer to the NVM wrapper block guides for detailed information.

2 BDM hardware commands restricted to peripheral registers only.

9.1.3 Securing the Microcontroller

Once the user has programmed the Flash and EEPROM, the chip can be secured by programming the security bits located in the options/security byte in the Flash memory array. These non-volatile bits will keep the device secured through reset and power-down.

The options/security byte is located at address 0xFF0F (= global address 0x7F_FF0F) in the Flash memory array. This byte can be erased and programmed like any other Flash location. Two bits of this byte are used for security (SEC[1:0]). On devices which have a memory page window, the Flash options/security byte is also available at address 0xBF0F by selecting page 0x3F with the PPAGE register. The contents of this byte are copied into the Flash security register (FSEC) during a reset sequence.

	7	6	5	4	3	2	1	0
0xFF0F	KEYEN1	KEYEN0	NV5	NV4	NV3	NV2	SEC1	SEC0

Figure 9-1. Flash Options/Security Byte

The meaning of the bits KEYEN[1:0] is shown in Table 9-3. Please refer to Section 9.1.5.1, “Unsecuring the MCU Using the Backdoor Key Access” for more information.

Table 9-3. Backdoor Key Access Enable Bits

KEYEN[1:0]	Backdoor Key Access Enabled
00	0 (disabled)
01	0 (disabled)
10	1 (enabled)
11	0 (disabled)

The meaning of the security bits SEC[1:0] is shown in Table 9-4. For security reasons, the state of device security is controlled by two bits. To put the device in unsecured mode, these bits must be programmed to SEC[1:0] = ‘10’. All other combinations put the device in a secured mode. The recommended value to put the device in secured state is the inverse of the unsecured state, i.e. SEC[1:0] = ‘01’.

Table 9-4. Security Bits

SEC[1:0]	Security State
00	1 (secured)
01	1 (secured)
10	0 (unsecured)
11	1 (secured)

NOTE

Please refer to the Flash block guide for actual security configuration (in section “Flash Module Security”).

9.1.4 Operation of the Secured Microcontroller

By securing the device, unauthorized access to the EEPROM and Flash memory contents can be prevented. However, it must be understood that the security of the EEPROM and Flash memory contents also depends on the design of the application program. For example, if the application has the capability of downloading code through a serial port and then executing that code (e.g. an application containing bootloader code), then this capability could potentially be used to read the EEPROM and Flash memory contents even when the microcontroller is in the secure state. In this example, the security of the application could be enhanced by requiring a challenge/response authentication before any code can be downloaded.

Secured operation has the following effects on the microcontroller:

9.1.4.1 Normal Single Chip Mode (NS)

- Background debug module (BDM) operation is completely disabled.
- Execution of Flash and EEPROM commands is restricted. Please refer to the NVM block guide for details.
- Tracing code execution using the DBG module is disabled.

9.1.4.2 Special Single Chip Mode (SS)

- BDM firmware commands are disabled.
- BDM hardware commands are restricted to the register space.
- Execution of Flash and EEPROM commands is restricted. Please refer to the NVM block guide for details.
- Tracing code execution using the DBG module is disabled.

Special single chip mode means BDM is active after reset. The availability of BDM firmware commands depends on the security state of the device. The BDM secure firmware first performs a blank check of both the Flash memory and the EEPROM. If the blank check succeeds, security will be temporarily turned off and the state of the security bits in the appropriate Flash memory location can be changed If the blank check fails, security will remain active, only the BDM hardware commands will be enabled, and the accessible memory space is restricted to the peripheral register area. This will allow the BDM to be used

to erase the EEPROM and Flash memory without giving access to their contents. After erasing both Flash memory and EEPROM, another reset into special single chip mode will cause the blank check to succeed and the options/security byte can be programmed to “unsecured” state via BDM.

While the BDM is executing the blank check, the BDM interface is completely blocked, which means that all BDM commands are temporarily blocked.

9.1.5 Unsecuring the Microcontroller

Unsecuring the microcontroller can be done by three different methods:

1. Backdoor key access
2. Reprogramming the security bits
3. Complete memory erase (special modes)

9.1.5.1 Unsecuring the MCU Using the Backdoor Key Access

In normal modes (single chip and expanded), security can be temporarily disabled using the backdoor key access method. This method requires that:

- The backdoor key at 0xFF00–0xFF07 (= global addresses 0x3_FF00–0x3_FF07) has been programmed to a valid value.
- The KEYEN[1:0] bits within the Flash options/security byte select ‘enabled’.
- In single chip mode, the application program programmed into the microcontroller must be designed to have the capability to write to the backdoor key locations.

The backdoor key values themselves would not normally be stored within the application data, which means the application program would have to be designed to receive the backdoor key values from an external source (e.g. through a serial port).

The backdoor key access method allows debugging of a secured microcontroller without having to erase the Flash. This is particularly useful for failure analysis.

NOTE

No word of the backdoor key is allowed to have the value 0x0000 or 0xFFFF.

9.1.6 Reprogramming the Security Bits

In normal single chip mode (NS), security can also be disabled by erasing and reprogramming the security bits within Flash options/security byte to the unsecured value. Because the erase operation will erase the entire sector from 0xFE00–0xFFFF (0x7F_FE00–0x7F_FFFF), the backdoor key and the interrupt vectors will also be erased; this method is not recommended for normal single chip mode. The application software can only erase and program the Flash options/security byte if the Flash sector containing the Flash options/security byte is not protected (see Flash protection). Thus Flash protection is a useful means of preventing this method. The microcontroller will enter the unsecured state after the next reset following the programming of the security bits to the unsecured value.

This method requires that:

- The application software previously programmed into the microcontroller has been designed to have the capability to erase and program the Flash options/security byte, or security is first disabled using the backdoor key method, allowing BDM to be used to issue commands to erase and program the Flash options/security byte.
- The Flash sector containing the Flash options/security byte is not protected.

9.1.7 Complete Memory Erase (Special Modes)

The microcontroller can be unsecured in special modes by erasing the entire EEPROM and Flash memory contents.

When a secure microcontroller is reset into special single chip mode (SS), the BDM firmware verifies whether the EEPROM and Flash memory are erased. If any EEPROM or Flash memory address is not erased, only BDM hardware commands are enabled. BDM hardware commands can then be used to write to the EEPROM and Flash registers to mass erase the EEPROM and all Flash memory blocks.

When next reset into special single chip mode, the BDM firmware will again verify whether all EEPROM and Flash memory are erased, and this being the case, will enable all BDM commands, allowing the Flash options/security byte to be programmed to the unsecured value. The security bits SEC[1:0] in the Flash security register will indicate the unsecure state following the next reset.

Chapter 10
S12 Clock, Reset and Power Management Unit (S12CPMU)

Revision History

Version Number	Revision Date	Effective Date	Author	Description of Changes
V04.03	29 Jan 10	29 Jan 10		Added Note in section 10.3.2.16/10-380 to precise description of API behavior after feature enable for the first time-out period.
V04.04	03 Mar 10	03 Mar 10		Corrected typos.
V04.05	23. Mar 10	23 Mar 10		Corrected typos.
V04.06	13 Apr 10	13 Apr 10		Corrected typo in Table 10-6
V04.07	28 Apr 10	28 Apr 10		Major rework fixing typos, figures and tables and improved description of Adaptive Oscillator Filter.
V04.08	03 May 10	03 Mail 10		Improved pin description in Section 10.2, “Signal Description
V04.09	22 Jun 10	22 Jun 10		Changed IP-Name from OSCLCP to XOSCLCP, added OSCCLK_LCP clock name intoFigure 10-1 and Figure 10-2 updated description of Section 10.2.2, “EXTAL and XTAL.
V04.10	01 Jul 10	01 Jul 10		Added TC trimming to feature list
V04.11	23 Aug 10	23 Aug 10		Removed feature of adaptive oscillator filter. Register bits 6 and 4to 0in the CPMUOSC register are marked reserved and do not alter.
V04.12	27 April 12	27 April 12		Corrected wording for API interrupt flag Changed notation of IRC trim values for 0x00000 to 0b00000
V04.13	6 Mar 13	6 Mar 13		Table 10-19. correction: substituted f_{ACLK} by ACLK Clock Period

10.1 Introduction

This specification describes the function of the Clock, Reset and Power Management Unit (S12CPMU).

- The Pierce oscillator (XOSCLCP) provides a robust, low-noise and low-power external clock source. It is designed for optimal start-up margin with typical quartz crystals and ceramic resonators.
- The Voltage regulator (IVREG) operates from the range 3.13V to 5.5V. It provides all the required chip internal voltages and voltage monitors.
- The Phase Locked Loop (PLL) provides a highly accurate frequency multiplier with internal filter.

- The Internal Reference Clock (IRC1M) provides a1MHz clock.

10.1.1 Features

The Pierce Oscillator (XOSCLCP) contains circuitry to dynamically control current gain in the output amplitude. This ensures a signal with low harmonic distortion, low power and good noise immunity.

- Supports quartz crystals or ceramic resonators from 4MHz to 16MHz.
- High noise immunity due to input hysteresis and spike filtering.
- Low RF emissions with peak-to-peak swing limited dynamically
- Transconductance (gm) sized for optimum start-up margin for typical crystals
- Dynamic gain control eliminates the need for external current limiting resistor
- Integrated resistor eliminates the need for external bias resistor.
- Low power consumption: Operates from internal 1.8V (nominal) supply, Amplitude control limits power

The Voltage Regulator (IVREG) has the following features:

- Input voltage range from 3.13V to 5.5V
- Low-voltage detect (LVD) with low-voltage interrupt (LVI)
- Power-on reset (POR)
- Low-voltage reset (LVR)

The Phase Locked Loop (PLL) has the following features:

- highly accurate and phase locked frequency multiplier
- Configurable internal filter for best stability and lock time.
- Frequency modulation for defined jitter and reduced emission
- Automatic frequency lock detector
- Interrupt request on entry or exit from locked condition
- Reference clock either external (crystal) or internal square wave (1MHz IRC1M) based.
- PLL stability is sufficient for LIN communication, even if using IRC1M as reference clock

The Internal Reference Clock (IRC1M) has the following features:

- Frequency trimming
  (A factory trim value for 1MHz is loaded from Flash Memory into the IRCTRIM register after reset, which can be overwritten by application if required)
- Temperature Coefficient (TC) trimming.
  (A factory trim value is loaded from Flash Memory into the IRCTRIM register to turned off TC trimming after reset. Application can trim the TC if required by overwriting the IRCTRIM register).
-

Other features of the S12CPMU include

- Clock monitor to detect loss of crystal

- Autonomous periodical interrupt (API)
- Bus Clock Generator
  - Clock switch to select either PLLCLK or external crystal/resonator based Bus Clock
  - PLLCLK divider to adjust system speed
- System Reset generation from the following possible sources:
  - Power-on reset (POR)
  - Low-voltage reset (LVR)
  - Illegal address access
  - COP time out
  - Loss of oscillation (clock monitor fail)
  - External pin $\overline{\text{RESET}}$

10.1.2 Modes of Operation

This subsection lists and briefly describes all operating modes supported by the S12CPMU.

10.1.2.1 Run Mode

The voltage regulator is in Full Performance Mode (FPM).

The Phase Locked Loop (PLL) is on.

The Internal Reference Clock (IRC1M) is on.

The API is available.

- PLL Engaged Internal (PEI)
  - This is the default mode after System Reset and Power-On Reset.
  - The Bus Clock is based on the PLLCLK.
  - After reset the PLL is configured for 50 MHz VCOCLK operation
    Post divider is 0x03, so PLLCLK is VCOCLK divided by 4, that is 12.5MHz and Bus Clock is 6.25MHz.
    The PLL can be re-configured for other bus frequencies.
  - The reference clock for the PLL (REFCLK) is based on internal reference clock IRC1M
- PLL Engaged External (PEE)
  - The Bus Clock is based n the PLLCLK.
  - This mode can be entered from default mode PEI by performing the following steps:
    - Configure the PLL for desired bus frequency.
    - Program the reference divider (REFDIV[3:0] bits) to divide down oscillator frequency if necessary.
    - Enable the external oscillator (OSCE bit)
    - Wait for oscillator to start up (UPOSC=1) and PLL to lock (LOCK=1).
- PLL Bypassed External (PBE)

— The Bus Clock is based on the Oscillator Clock (OSCCLK).
— The PLLCLK is always on to qualify the external oscillator clock. Therefore it is necessary to make sure a valid PLL configuration is used for the selected oscillator frequency.
— This mode can be entered from default mode PEI by performing the following steps:
  – Make sure the PLL configuration is valid for the selected oscillator frequency.
  – Enable the external oscillator (OSCE bit)
  – Wait for oscillator to start up (UPOSC=1)
  – Select the Oscillator Clock (OSCCLK) as Bus Clock (PLLSEL=0).
— The PLLCLK is on and used to qualify the external oscillator clock.

10.1.2.2 Wait Mode

For S12CPMU Wait Mode is the same as Run Mode.

10.1.2.3 Stop Mode

This mode is entered by executing the CPU STOP instruction.

The voltage regulator is in Reduced Power Mode (RPM).

The API is available.

The Phase Locked Loop (PLL) is off.

The Internal Reference Clock (IRC1M) is off.

Core Clock, Bus Clock and BDM Clock are stopped.

Depending on the setting of the PSTP and the OSCE bit, Stop Mode can be differentiated between Full Stop Mode (PSTP = 0 or OSCE=0) and Pseudo Stop Mode (PSTP = 1 and OSCE=1). In addition, the behavior of the COP in each mode will change based on the clocking method selected by COPOSCSEL[1:0].

- **Full Stop Mode (PSTP = 0 or OSCE=0)**
  External oscillator (XOSCLCP) is disabled.
  — If COPOSCSEL1=0:
    The COP and RTI counters halt during Full Stop Mode.
    After wake-up from Full Stop Mode the Core Clock and Bus Clock are running on PLLCLK (PLLSEL=1). COP and RTI are running on IRCCLK (COPOSCSEL0=0, RTIOSCSEL=0).
  — If COPOSCSEL1=1:
    During Full Stop Mode the COP is running on ACLK (trimmable internal RC-Oscillator clock) and the RTI counter halts.
    After wake-up from Full Stop Mode the Core Clock and Bus Clock are running on PLLCLK (PLLSEL=1). The COP runs on ACLK and RTI is running on IRCCLK (COPOSCSEL0=0, RTIOSCSEL=0).

- **Pseudo Stop Mode (PSTP = 1 and OSCE=1)**
  External oscillator (XOSCLCP) continues to run.
  — If COPOSCSEL1=0:
  If the respective enable bits are set (PCE=1 and PRE=1) the COP and RTI will continue to run with a clock derived from the oscillator clock.
  The clock configuration bits PLLSEL, COPOSCSEL0, RTIOSCSEL are unchanged.
  — If COPOSCSEL1=1:
  If the respective enable bit for the RTI is set (PRE=1) the RTI will continue to run with a clock derived from the oscillator clock.
  The COP will continue to run on ACLK.
  The clock configuration bits PLLSEL, COPOSCSEL0, RTIOSCSEL are unchanged.

NOTE

When starting up the external oscillator (either by programming OSCE bit to 1 or on exit from Full Stop Mode with OSCE bit already 1) the software must wait for a minimum time equivalent to the startup-time of the external oscillator t_{UPOSC} before entering Pseudo Stop Mode.

10.1.3 S12CPMU Block Diagram

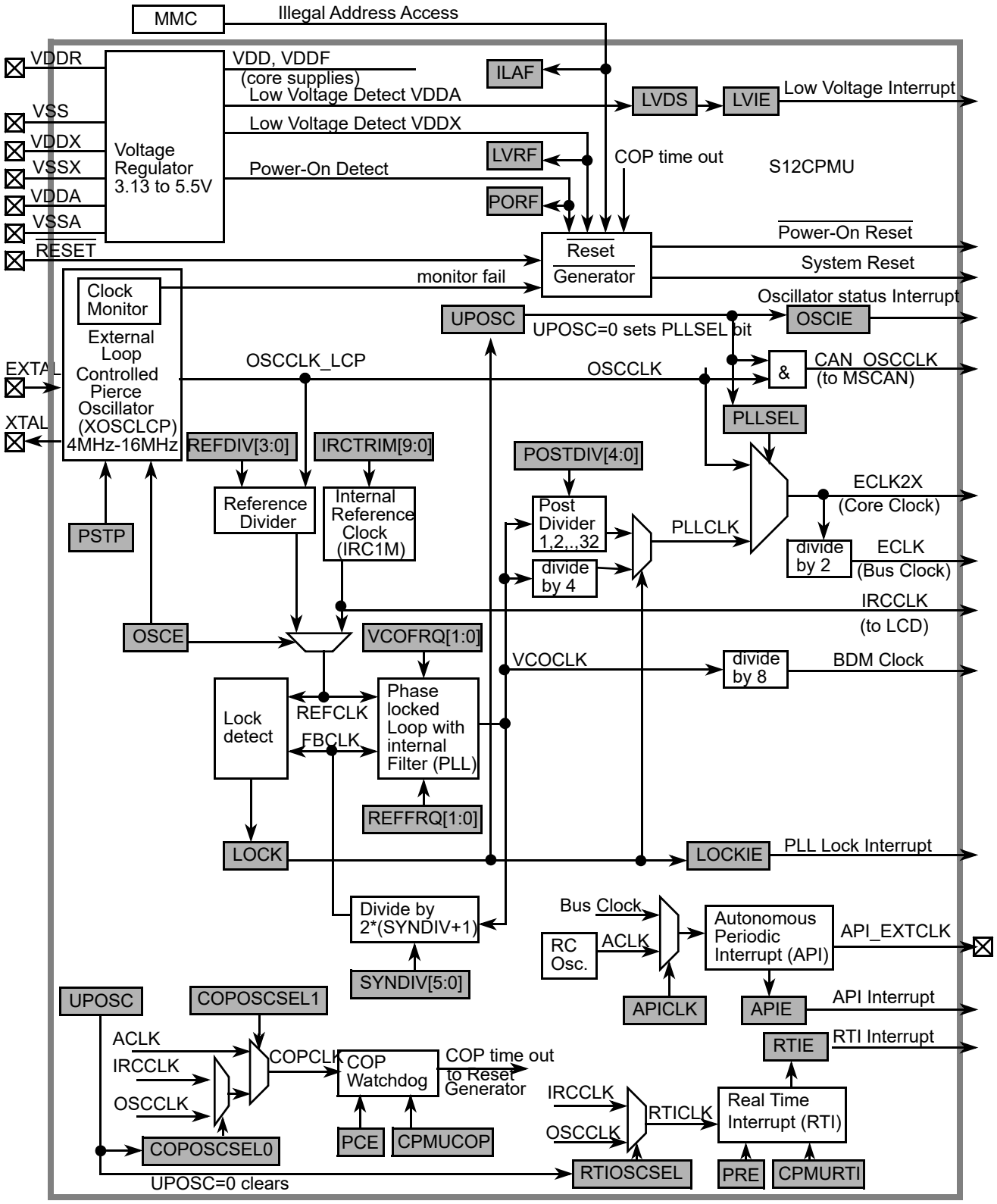

Figure 10-1. Block diagram of S12CPMU

Figure 10-2 shows a block diagram of the XOSCLCP.

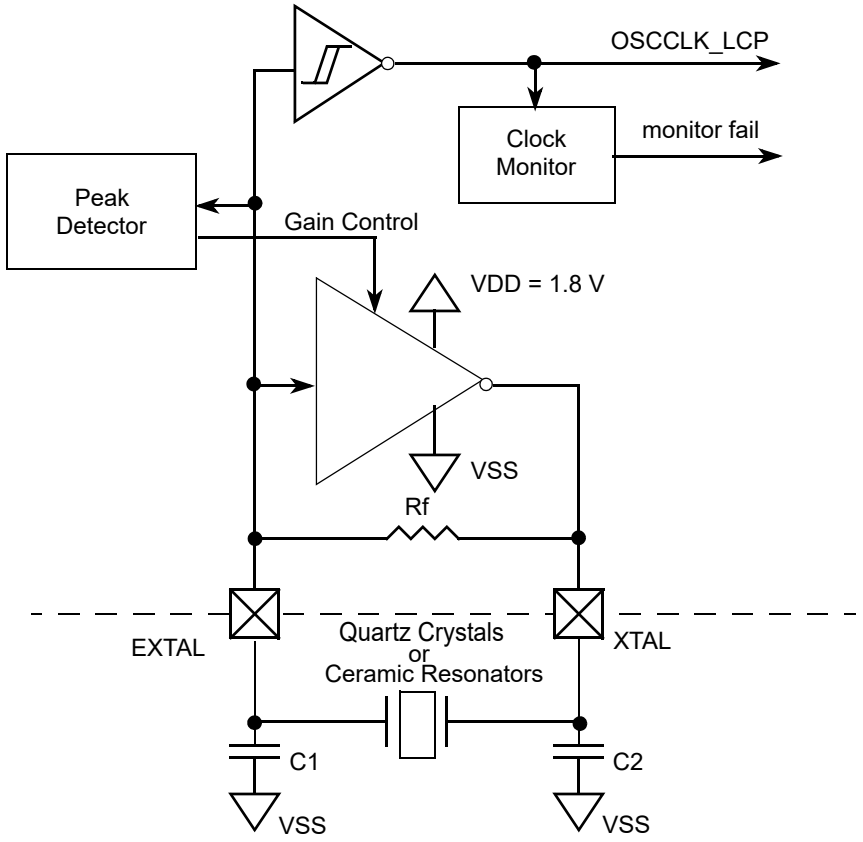

Figure 10-2. XOSCLCP Block Diagram

10.2 Signal Description

This section lists and describes the signals that connect off chip.

10.2.1 $\overline{\text{RESET}}$

Pin $\overline{\text{RESET}}$ is an active-low bidirectional pin. As an input it initializes the MCU asynchronously to a known start-up state. As an open-drain output it indicates that an MCU-internal reset has been triggered.

10.2.2 EXTAL and XTAL

These pins provide the interface for a crystal to control the internal clock generator circuitry. EXTAL is the input to the crystal oscillator amplifier. XTAL is the output of the crystal oscillator amplifier. If XOSCLCP is enabled, the MCU internal OSCCLK_LCP is derived from the EXTAL input frequency. If OSCE=0, the EXTAL pin is pulled down by an internal resistor of approximately 200 kΩ and the XTAL pin is pulled down by an internal resistor of approximately 700 kΩ.

NOTE

NXP recommends an evaluation of the application board and chosen resonator or crystal by the resonator or crystal supplier.
The loop controlled circuit (XOSCLCP) is not suited for overtone resonators and crystals.

10.2.3 VDDR — Regulator Power Input Pin

Pin V_{DDR} is the power input of IVREG. All currents sourced into the regulator loads flow through this pin.

An off-chip decoupling capacitor (100 nF...220 nF, X7R ceramic) between V_{DDR} and V_{SS} can smooth ripple on V_{DDR}.

10.2.4 VSS — Ground Pin

V_{SS} must be grounded.

10.2.5 VDDA, VSSA — Regulator Reference Supply Pins

Pins V_{DDA} and V_{SSA} are used to supply the analog parts of the regulator.
Internal precision reference circuits are supplied from these signals.

An off-chip decoupling capacitor (100 nF...220 nF, X7R ceramic) between V_{DDA} and V_{SSA} can improve the quality of this supply.

10.2.6 VDDX, VSSX— Pad Supply Pins

This supply domain is monitored by the Low Voltage Reset circuit.

An off-chip decoupling capacitor (100 nF...220 nF, X7R ceramic) between VDDX and VSSX can improve the quality of this supply.

NOTE

Depending on the device package following device supply pins are maybe combined into one pin: VDDR, VDDX and VDDA.
Depending on the device package following device supply pins are maybe combined into one pin: VSS, VSSX and VSSA.
Please refer to the device Reference Manual for information if device supply pins are combined into one supply pin for certain packages and which supply pins are combined together.
An off-chip decoupling capacitor (100 nF...220 nF, X7R ceramic) between the combined supply pin pair can improve the quality of this supply.

10.2.7 VDD — Internal Regulator Output Supply (Core Logic)

Node VDD is a device internal supply output of the voltage regulator that provides the power supply for the core logic.
This supply domain is monitored by the Low Voltage Reset circuit.

10.2.8 VDDF — Internal Regulator Output Supply (NVM Logic)

Node VDDF is a device internal supply output of the voltage regulator that provides the power supply for the NVM logic.
This supply domain is monitored by the Low Voltage Reset circuit

10.2.9 API_EXTCLK — API external clock output pin

This pin provides the signal selected via APIES and is enabled with APIEA bit. See device specification to which pin it connects.

10.3 Memory Map and Registers

This section provides a detailed description of all registers accessible in the S12CPMU.

10.3.1 Module Memory Map

The S12CPMU registers are shown in Figure 10-3.

Address	Name		Bit 7	6	5	4	3	2	1	Bit 0
0x0034	CPMU SYNR	R	VCOFRQ[1:0]		SYNDIV[5:0]					
		W								
0x0035	CPMU REFDIV	R	REFFRQ[1:0]		0	0	REFDIV[3:0]			
		W								
0x0036	CPMU POSTDIV	R	0	0	0	POSTDIV[4:0]				
		W								
0x0037	CPMUFLG	R	RTIF	PORF	LVRF	LOCKIF	LOCK	ILAF	OSCIF	UPOSC
		W								
0x0038	CPMUINT	R	RTIE	0	0	LOCKIE	0	0	OSCIE	0
		W								
0x0039	CPMUCLKS	R	PLLSEL	PSTP	0	COP OSCSEL1	PRE	PCE	RTI OSCSEL	COP OSCSEL0
		W								
0x003A	CPMUPLL	R	0	0	FM1	FM0	0	0	0	0
		W								
			= Unimplemented or Reserved							

Figure 10-3. CPMU Register Summary

Address	Name		Bit 7	6	5	4	3	2	1	Bit 0
0x003B	CPMURTI	R	RTDEC	RTR6	RTR5	RTR4	RTR3	RTR2	RTR1	RTR0
		W								
0x003C	CPMUCOP	R	WCOP	RSBCK	0	0	0	CR2	CR1	CR0
		W			WRTMASK					
0x003D	RESERVEDCPMUTEST0	R	0	0	0	0	0	0	0	0
		W								
0x003E	RESERVEDCPMUTEST1	R	0	0	0	0	0	0	0	0
		W								
0x003F	CPMU ARMCOP	R	0	0	0	0	0	0	0	0
		W	Bit 7	Bit 6	Bit 5	Bit 4	Bit 3	Bit 2	Bit 1	Bit 0
0x02F0	RESERVED	R	0	0	0	0	0	0	0	0
		W								
0x02F1	CPMU LVCTL	R	0	0	0	0	0	LVDS	LVIE	LVIF
		W								
0x02F2	CPMU APICTL	R	APICLK	0	0	APIES	APIEA	APIFE	APIE	APIF
		W								
0x02F3	CPMUACLKTR	R	ACLKTR5	ACLKTR4	ACLKTR3	ACLKTR2	ACLKTR1	ACLKTR0	0	0
		W								
0x02F4	CPMUAPIRH	R	APIR15	APIR14	APIR13	APIR12	APIR11	APIR10	APIR9	APIR8
		W								
0x02F5	CPMUAPIRL	R	APIR7	APIR6	APIR5	APIR4	APIR3	APIR2	APIR1	APIR0
		W								
0x02F6	RESERVEDCPMUTEST3	R	0	0	0	0	0	0	0	0
		W								
0x02F7	RESERVED	R	0	0	0	0	0	0	0	0
		W								
0x02F8	CPMU IRCTRIMH	R	TCTRIM[4:0]					0	IRCTRIM[9:8]	
		W								
0x02F9	CPMU IRCTRIML	R	IRCTRIM[7:0]							
		W								
0x02FA	CPMUOSC	R	OSCE	Reserved	OSCPINS_EN	Reserved				
		W								
0x02FB	CPMUPROT	R	0	0	0	0	0	0	0	PROT
		W								
0x02FC	RESERVEDCPMUTEST2	R	0	0	0	0	0	0	0	0
		W								

= Unimplemented or Reserved

Figure 10-3. CPMU Register Summary

10.3.2 Register Descriptions

This section describes all the S12CPMU registers and their individual bits.

Address order is as listed in Figure 10-3.

10.3.2.1 S12CPMU Synthesizer Register (CPMUSYNR)

The CPMUSYNR register controls the multiplication factor of the PLL and selects the VCO frequency range.

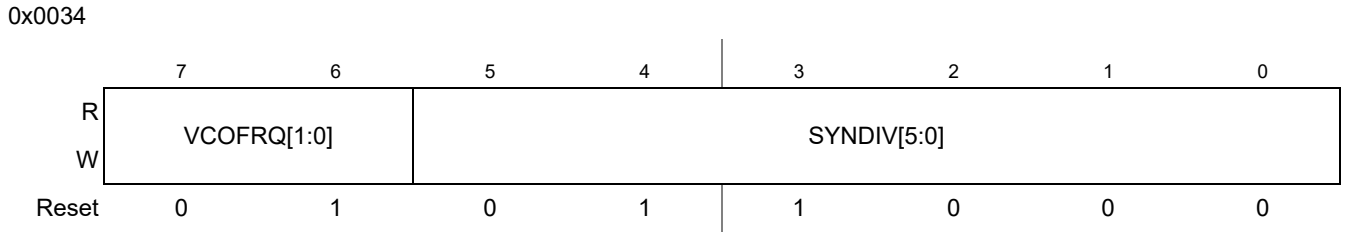

Figure 10-4. S12CPMU Synthesizer Register (CPMUSYNR)

Read: Anytime

Write: Anytime if PROT=0 (CPMUPROT register) and PLLSEL=1 (CPMUCLKS register). Else write has no effect.

NOTE

Writing to this register clears the LOCK and UPOSC status bits.

If PLL has locked (LOCK=1) $f_{VCO} = 2 \times f_{REF} \times (SYNDIV + 1)$

NOTE

f_{VCO} must be within the specified VCO frequency lock range. Bus frequency f_{bus} must not exceed the specified maximum.

The VCOFRQ[1:0] bits are used to configure the VCO gain for optimal stability and lock time. For correct PLL operation the VCOFRQ[1:0] bits have to be selected according to the actual target VCOCLK frequency as shown in Table 10-1. Setting the VCOFRQ[1:0] bits incorrectly can result in a non functional PLL (no locking and/or insufficient stability).

Table 10-1. VCO Clock Frequency Selection

VCOCLK Frequency Ranges	VCOFRQ[1:0]
32MHz <= f_{VCO}<= 48MHz	00
48MHz < f_{VCO}<= 50MHz	01
Reserved	10

Table 10-1. VCO Clock Frequency Selection

VCOCLK Frequency Ranges	VCOFRQ[1:0]
Reserved	11

10.3.2.2 S12CPMU Reference Divider Register (CPMUREFDIV)

The CPMUREFDIV register provides a finer granularity for the PLL multiplier steps when using the external oscillator as reference.

0x0035

	7	6	5	4	3	2	1	0
R	REFFRQ[1:0]		0	0	REFDIV[3:0]			
W								
Reset	0	0	0	0	1	1	1	1

Figure 10-5. S12CPMU Reference Divider Register (CPMUREFDIV)

Read: Anytime

Write: Anytime if PROT=0 (CPMUPROT register) and PLLSEL=1 (CPMUCLKS register). Else write has no effect.

NOTE

Write to this register clears the LOCK and UPOSC status bits.

If XOSCLCP is enabled (OSCE=1) $f_{REF} = \frac{f_{OSC}}{(REFDIV + 1)}$

If XOSCLCP is disabled (OSCE=0) $f_{REF} = f_{IRC1M}$

The REFFRQ[1:0] bits are used to configure the internal PLL filter for optimal stability and lock time. For correct PLL operation the REFFRQ[1:0] bits have to be selected according to the actual REFCLK frequency as shown in Table 10-2.

If IRC1M is selected as REFCLK (OSCE=0) the PLL filter is fixed configured for the 1MHz <= f_{REF} <= 2MHz range. The bits can still be written but will have no effect on the PLL filter configuration.

For OSCE=1, setting the REFFRQ[1:0] bits incorrectly can result in a non functional PLL (no locking and/or insufficient stability).

Table 10-2. Reference Clock Frequency Selection if OSC_LCP is enabled

REFCLK Frequency Ranges (OSCE=1)	REFFRQ[1:0]
1MHz <= f_{REF} <= 2MHz	00
2MHz < f_{REF} <= 6MHz	01
6MHz < f_{REF} <= 12MHz	10
f_{REF} >12MHz	11

10.3.2.3 S12CPMU Post Divider Register (CPMUPOSTDIV)

The POSTDIV register controls the frequency ratio between the VCOCLK and the PLLCLK.

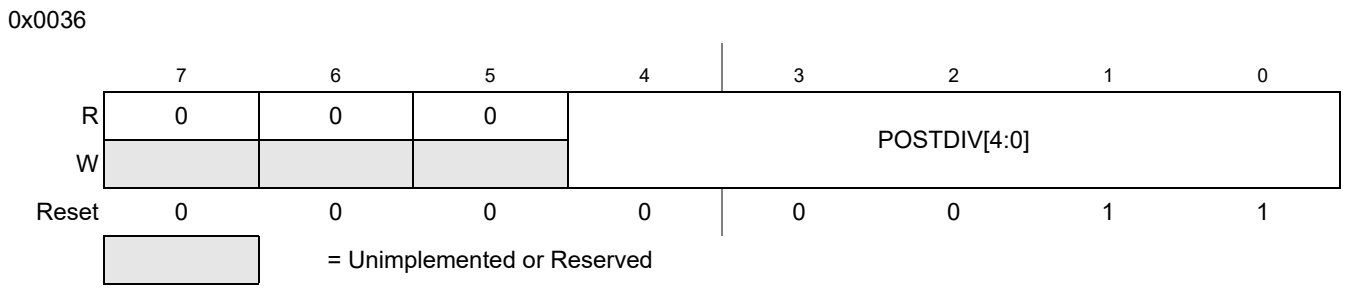

Figure 10-6. S12CPMU Post Divider Register (CPMUPOSTDIV)

Read: Anytime

Write: Anytime if PLLSEL=1. Else write has no effect.

If PLL is locked (LOCK=1) $f_{PLL} = \frac{f_{VCO}}{(POSTDIV + 1)}$

If PLL is not locked (LOCK=0) $f_{PLL} = \frac{f_{VCO}}{4}$

If PLL is selected (PLLSEL=1) $f_{bus} = \frac{f_{PLL}}{2}$

10.3.2.4 S12CPMU Flags Register (CPMUFLG)

This register provides S12CPMU status bits and flags.

0x0037

	7	6	5	4	3	2	1	0
R	RTIF	PORF	LVRF	LOCKIF	LOCK	ILAF	OSCIF	UPOSC
W								
Reset	0	Note 1	Note 2	0	0	Note 3	0	0

1. PORF is set to 1 when a power on reset occurs. Unaffected by System Reset.
2. LVRF is set to 1 when a low voltage reset occurs. Unaffected by System Reset. Set by power on reset.
3. ILAF is set to 1 when an illegal address reset occurs. Unaffected by System Reset. Cleared by power on reset.

= Unimplemented or Reserved

Figure 10-7. S12CPMU Flags Register (CPMUFLG)

Read: Anytime

Write: Refer to each bit for individual write conditions

Table 10-3. CPMUFLG Field Descriptions

Field	Description
7 RTIF	**Real Time Interrupt Flag** — RTIF is set to 1 at the end of the RTI period. This flag can only be cleared by writing a 1. Writing a 0 has no effect. If enabled (RTIE=1), RTIF causes an interrupt request. 0 RTI time-out has not yet occurred. 1 RTI time-out has occurred.
6 PORF	**Power on Reset Flag** — PORF is set to 1 when a power on reset occurs. This flag can only be cleared by writing a 1. Writing a 0 has no effect. 0 Power on reset has not occurred. 1 Power on reset has occurred.
5 LVRF	**Low Voltage Reset Flag** — LVRF is set to 1 when a low voltage reset occurs. This flag can only be cleared by writing a 1. Writing a 0 has no effect. 0 Low voltage reset has not occurred. 1 Low voltage reset has occurred.
4 LOCKIF	**PLL Lock Interrupt Flag** — LOCKIF is set to 1 when LOCK status bit changes. This flag can only be cleared by writing a 1. Writing a 0 has no effect.If enabled (LOCKIE=1), LOCKIF causes an interrupt request. 0 No change in LOCK bit. 1 LOCK bit has changed.
3 LOCK	**Lock Status Bit** — LOCK reflects the current state of PLL lock condition. Writes have no effect. While PLL is unlocked (LOCK=0) fPLL is fVCO / 4 to protect the system from high core clock frequencies during the PLL stabilization time tlock. 0 VCOCLK is not within the desired tolerance of the target frequency. $f_{PLL} = f_{VCO}/4$. 1 VCOCLK is within the desired tolerance of the target frequency. $f_{PLL} = f_{VCO}/(POSTDIV+1)$.
2 ILAF	**Illegal Address Reset Flag** — ILAF is set to 1 when an illegal address reset occurs. Refer to MMC chapter for details. This flag can only be cleared by writing a 1. Writing a 0 has no effect. 0 Illegal address reset has not occurred. 1 Illegal address reset has occurred.

Table 10-3. CPMUFLG Field Descriptions (continued)

Field	Description
1 OSCIF	**Oscillator Interrupt Flag** — OSCIF is set to 1 when UPOSC status bit changes. This flag can only be cleared by writing a 1. Writing a 0 has no effect.If enabled (OSCIE=1), OSCIF causes an interrupt request. 0 No change in UPOSC bit. 1 UPOSC bit has changed.
0 UPOSC	**Oscillator Status Bit** — UPOSC reflects the status of the oscillator. Writes have no effect. While UPOSC=0 the OSCCLK going to the MSCAN module is off. Entering Full Stop Mode UPOSC is cleared. 0 The oscillator is off or oscillation is not qualified by the PLL. 1 The oscillator is qualified by the PLL.

10.3.2.5 S12CPMU Interrupt Enable Register (CPMUINT)

This register enables S12CPMU interrupt requests.

0x0038

	7	6	5	4	3	2	1	0
R	RTIE	0	0	LOCKIE	0	0	OSCIE	0
W								
Reset	0	0	0	0	0	0	0	0

= Unimplemented or Reserved

Figure 10-8. S12CPMU Interrupt Enable Register (CPMUINT)

Read: Anytime

Write: Anytime

Table 10-4. CPMUINT Field Descriptions

Field	Description
7 RTIE	Real Time Interrupt Enable Bit 0 Interrupt requests from RTI are disabled. 1 Interrupt will be requested whenever RTIF is set.
4 LOCKIE	PLL Lock Interrupt Enable Bit 0 PLL LOCK interrupt requests are disabled. 1 Interrupt will be requested whenever LOCKIF is set.
1 OSCIE	Oscillator Corrupt Interrupt Enable Bit 0 Oscillator Corrupt interrupt requests are disabled. 1 Interrupt will be requested whenever OSCIF is set.

10.3.2.6 S12CPMU Clock Select Register (CPMUCLKS)

This register controls S12CPMU clock selection.

0x0039

	7	6	5	4	3	2	1	0
R	PLLSEL	PSTP	0	COP OSCSEL1	PRE	PCE	RTI OSCSEL	COP OSCSEL0
W								
Reset	1	0	0	0	0	0	0	0

= Unimplemented or Reserved

Figure 10-9. S12CPMU Clock Select Register (CPMUCLKS)

Read: Anytime

Write:

1. Only possible if PROT=0 (CPMUPROT register) in all MCU Modes (Normal and Special Mode).
2. All bits in Special Mode (if PROT=0).
3. PLLSEL, PSTP, PRE, PCE, RTIOSCSEL: In Normal Mode (if PROT=0).
4. COPOSCSEL0: In Normal Mode (if PROT=0) until CPMUCOP write once has taken place. If COPOSCSEL0 was cleared by UPOSC=0 (entering Full Stop Mode with COPOSCSEL0=1 or insufficient OSCCLK quality), then COPOSCSEL0 can be set once again.
5. COPOSCSEL1: In Normal Mode (if PROT=0) until CPMUCOP write once is taken. COPOSCSEL1 will not be cleared by UPOSC=0 (entering Full Stop Mode with COPOSCSEL1=1 or insufficient OSCCLK quality if OSCCLK is used as clock source for other clock domains: for instance core clock etc.).

NOTE

After writing CPMUCLKS register, it is strongly recommended to read back CPMUCLKS register to make sure that write of PLLSEL, RTIOSCSEL, COPOSCSEL0 and COPOSCSEL1 was successful.

Table 10-5. CPMUCLKS Descriptions

Field	Description
7 PLLSEL	PLL Select Bit This bit selects the PLLCLK as source of the System Clocks (Core Clock and Bus Clock). PLLSEL can only be set to 0, if UPOSC=1. UPOSC= 0 sets the PLLSEL bit. Entering Full Stop Mode sets the PLLSEL bit. 0 System clocks are derived from OSCCLK if oscillator is up (UPOSC=1, $f_{bus} = f_{osc} / 2$. 1 System clocks are derived from PLLCLK, $f_{bus} = f_{PLL} / 2$.
6 PSTP	Pseudo Stop Bit This bit controls the functionality of the oscillator during Stop Mode. 0 Oscillator is disabled in Stop Mode (Full Stop Mode). 1 Oscillator continues to run in Stop Mode (Pseudo Stop Mode), option to run RTI and COP. **Note:** Pseudo Stop Mode allows for faster STOP recovery and reduces the mechanical stress and aging of the resonator in case of frequent STOP conditions at the expense of a slightly increased power consumption. **Note:** When starting up the external oscillator (either by programming OSCE bit to 1 or on exit from Full Stop Mode with OSCE bit is already 1) the software must wait for a minimum time equivalent to the startup-time of the external oscillator t_{UPOSC} before entering Pseudo Stop Mode.
4 COP OSCSEL1	**COP Clock Select 1** — COPOSCSEL0 and COPOSCSEL1 combined determine the clock source to the COP (see also Table 10-6). If COPOSCSEL1 = 1, COPOSCSEL0 has no effect regarding clock select and changing the COPOSCSEL0 bit does not re-start the COP time-out period. COPOSCSEL1 selects the clock source to the COP to be either ACLK (derived from trimmable internal RC-Oscillator) or clock selected via COPOSCSEL0 (IRCCLK or OSCCLK). Changing the COPOSCSEL1 bit re-starts the COP time-out period. COPOSCSEL1 can be set independent from value of UPOSC. UPOSC= 0 does not clear the COPOSCSEL1 bit. 0 COP clock source defined by COPOSCSEL0 1 COP clock source is ACLK derived from a trimmable internal RC-Oscillator
3 PRE	**RTI Enable During Pseudo Stop Bit** — PRE enables the RTI during Pseudo Stop Mode. 0 RTI stops running during Pseudo Stop Mode. 1 RTI continues running during Pseudo Stop Mode if RTIOSCSEL=1. **Note:** If PRE=0 or RTIOSCSEL=0 then the RTI will go static while Stop Mode is active. The RTI counter will not be reset.
2 PCE	**COP Enable During Pseudo Stop Bit** — PCE enables the COP during Pseudo Stop Mode. 0 COP stops running during Pseudo Stop Mode if: COPOSCSEL1=0 and COPOSCSEL0=0 1 COP continues running during Pseudo Stop Mode if: PSTP=1, COPOSCSEL1=0 and COPOSCSEL0=1 **Note:** If PCE=0 or COPOSCSEL0=0 while COPOSCSEL1=0 then the COP is static during Stop Mode being active. The COP counter will not be reset.

Table 10-5. CPMUCLKS Descriptions (continued)

Field	Description
1 RTIOSCSEL	**RTI Clock Select** — RTIOSCSEL selects the clock source to the RTI. Either IRCCLK or OSCCLK. Changing the RTIOSCSEL bit re-starts the RTI time-out period. RTIOSCSEL can only be set to 1, if UPOSC=1. UPOSC= 0 clears the RTIOSCSEL bit. 0 RTI clock source is IRCCLK. 1 RTI clock source is OSCCLK.
0 COP OSCSEL0	**COP Clock Select 0** — COPOSCSEL0 and COPOSCSEL1 combined determine the clock source to the COP (see also Table 10-6) If COPOSCSEL1 = 1, COPOSCSEL0 has no effect regarding clock select and changing the COPOSCSEL0 bit does not re-start the COP time-out period. When COPOSCSEL1=0,COPOSCSEL0 selects the clock source to the COP to be either IRCCLK or OSCCLK. Changing the COPOSCSEL0 bit re-starts the COP time-out period. COPOSCSEL0 can only be set to 1, if UPOSC=1. UPOSC= 0 clears the COPOSCSEL0 bit. 0 COP clock source is IRCCLK. 1 COP clock source is OSCCLK

Table 10-6. COPOSCSEL1, COPOSCSEL0 clock source select description

COPOSCSEL1	COPOSCSEL0	COP clock source
0	0	IRCCLK
0	1	OSCCLK
1	x	ACLK

10.3.2.7 S12CPMU PLL Control Register (CPMUPLL)

This register controls the PLL functionality.

0x003A

	7	6	5	4	3	2	1	0
R	0	0	FM1	FM0	0	0	0	0
W								
Reset	0	0	0	0	0	0	0	0

Figure 10-10. S12CPMU PLL Control Register (CPMUPLL)

Read: Anytime

Write: Anytime if PROT=0 (CPMUPROT register) and PLLSEL=1 (CPMUCLKS register). Else write has no effect.

NOTE

Write to this register clears the LOCK and UPOSC status bits.

NOTE

Care should be taken to ensure that the bus frequency does not exceed the specified maximum when frequency modulation is enabled.

Table 10-7. CPMUPLL Field Descriptions

Field	Description
5, 4 FM1, FM0	PLL **Frequency Modulation Enable Bits** — FM1 and FM0 enable frequency modulation on the VCOCLK. This is to reduce noise emission. The modulation frequency is f_{ref} divided by 16. See Table 10-8 for coding.

Table 10-8. FM Amplitude selection

FM1	FM0	FM Amplitude / f_{VCO} Variation
0	0	FM off
0	1	±1%
1	0	±2%
1	1	±4%

10.3.2.8 S12CPMU RTI Control Register (CPMURTI)

This register selects the time-out period for the Real Time Interrupt.

The clock source for the RTI is either IRCCLK or OSCCLK depending on the setting of the RTIOSCSEL bit. In Stop Mode with PSTP=1 (Pseudo Stop Mode) and RTIOSCSEL=1 the RTI continues to run, else the RTI counter halts in Stop Mode.

0x003B

	7	6	5	4	3	2	1	0
R W	RTDEC	RTR6	RTR5	RTR4	RTR3	RTR2	RTR1	RTR0
Reset	0	0	0	0	0	0	0	0

Figure 10-11. S12CPMU RTI Control Register (CPMURTI)

Read: Anytime

Write: Anytime

NOTE

A write to this register starts the RTI time-out period. A change of the RTIOSCSEL bit (writing a different value or loosing UPOSC status) re-starts the RTI time-out period.

Table 10-9. CPMURTI Field Descriptions

Field	Description
7 RTDEC	**Decimal or Binary Divider Select Bit** — RTDEC selects decimal or binary based prescaler values. 0 Binary based divider value. See Table 10-10 1 Decimal based divider value. See Table 10-11
6–4 RTR[6:4]	**Real Time Interrupt Prescale Rate Select Bits** — These bits select the prescale rate for the RTI. See Table 10-10 and Table 10-11.
3–0 RTR[3:0]	**Real Time Interrupt Modulus Counter Select Bits** — These bits select the modulus counter target value to provide additional granularity.Table 10-10 and Table 10-11 show all possible divide values selectable by the CPMURTI register.

Table 10-10. RTI Frequency Divide Rates for RTDEC = 0

RTR[3:0]	RTR[6:4] =							
	000 (OFF)	**001 (2^{10})**	**010 (2^{11})**	**011 (2^{12})**	**100 (2^{13})**	**101 (2^{14})**	**110 (2^{15})**	**111 (2^{16})**
0000 (÷1)	OFF[1]	2^{10}	2^{11}	2^{12}	2^{13}	2^{14}	2^{15}	2^{16}
0001 (÷2)	OFF	$2x2^{10}$	$2x2^{11}$	$2x2^{12}$	$2x2^{13}$	$2x2^{14}$	$2x2^{15}$	$2x2^{16}$
0010 (÷3)	OFF	$3x2^{10}$	$3x2^{11}$	$3x2^{12}$	$3x2^{13}$	$3x2^{14}$	$3x2^{15}$	$3x2^{16}$
0011 (÷4)	OFF	$4x2^{10}$	$4x2^{11}$	$4x2^{12}$	$4x2^{13}$	$4x2^{14}$	$4x2^{15}$	$4x2^{16}$
0100 (÷5)	OFF	$5x2^{10}$	$5x2^{11}$	$5x2^{12}$	$5x2^{13}$	$5x2^{14}$	$5x2^{15}$	$5x2^{16}$
0101 (÷6)	OFF	$6x2^{10}$	$6x2^{11}$	$6x2^{12}$	$6x2^{13}$	$6x2^{14}$	$6x2^{15}$	$6x2^{16}$
0110 (÷7)	OFF	$7x2^{10}$	$7x2^{11}$	$7x2^{12}$	$7x2^{13}$	$7x2^{14}$	$7x2^{15}$	$7x2^{16}$
0111 (÷8)	OFF	$8x2^{10}$	$8x2^{11}$	$8x2^{12}$	$8x2^{13}$	$8x2^{14}$	$8x2^{15}$	$8x2^{16}$
1000 (÷9)	OFF	$9x2^{10}$	$9x2^{11}$	$9x2^{12}$	$9x2^{13}$	$9x2^{14}$	$9x2^{15}$	$9x2^{16}$
1001 (÷10)	OFF	$10x2^{10}$	$10x2^{11}$	$10x2^{12}$	$10x2^{13}$	$10x2^{14}$	$10x2^{15}$	$10x2^{16}$
1010 (÷11)	OFF	$11x2^{10}$	$11x2^{11}$	$11x2^{12}$	$11x2^{13}$	$11x2^{14}$	$11x2^{15}$	$11x2^{16}$
1011 (÷12)	OFF	$12x2^{10}$	$12x2^{11}$	$12x2^{12}$	$12x2^{13}$	$12x2^{14}$	$12x2^{15}$	$12x2^{16}$
1100 (÷13)	OFF	$13x2^{10}$	$13x2^{11}$	$13x2^{12}$	$13x2^{13}$	$13x2^{14}$	$13x2^{15}$	$13x2^{16}$
1101 (÷14)	OFF	$14x2^{10}$	$14x2^{11}$	$14x2^{12}$	$14x2^{13}$	$14x2^{14}$	$14x2^{15}$	$14x2^{16}$

Table 10-10. RTI Frequency Divide Rates for RTDEC = 0

RTR[3:0]	RTR[6:4] =							
	000 (OFF)	**001 (2^{10})**	**010 (2^{11})**	**011 (2^{12})**	**100 (2^{13})**	**101 (2^{14})**	**110 (2^{15})**	**111 (2^{16})**
1110 (÷15)	OFF	$15x2^{10}$	$15x2^{11}$	$15x2^{12}$	$15x2^{13}$	$15x2^{14}$	$15x2^{15}$	$15x2^{16}$
1111 (÷16)	OFF	$16x2^{10}$	$16x2^{11}$	$16x2^{12}$	$16x2^{13}$	$16x2^{14}$	$16x2^{15}$	$16x2^{16}$

[1] Denotes the default value out of reset.This value should be used to disable the RTI to ensure future backwards compatibility.

Table 10-11. RTI Frequency Divide Rates for RTDEC=1

RTR[3:0]	RTR[6:4] =							
	000 ($1x10^3$)	**001 ($2x10^3$)**	**010 ($5x10^3$)**	**011 ($10x10^3$)**	**100 ($20x10^3$)**	**101 ($50x10^3$)**	**110 ($100x10^3$)**	**111 ($200x10^3$)**
0000 (÷1)	$1x10^3$	$2x10^3$	$5x10^3$	$10x10^3$	$20x10^3$	$50x10^3$	$100x10^3$	$200x10^3$
0001 (÷2)	$2x10^3$	$4x10^3$	$10x10^3$	$20x10^3$	$40x10^3$	$100x10^3$	$200x10^3$	$400x10^3$
0010 (÷3)	$3x10^3$	$6x10^3$	$15x10^3$	$30x10^3$	$60x10^3$	$150x10^3$	$300x10^3$	$600x10^3$
0011 (÷4)	$4x10^3$	$8x10^3$	$20x10^3$	$40x10^3$	$80x10^3$	$200x10^3$	$400x10^3$	$800x10^3$
0100 (÷5)	$5x10^3$	$10x10^3$	$25x10^3$	$50x10^3$	$100x10^3$	$250x10^3$	$500x10^3$	$1x10^6$
0101 (÷6)	$6x10^3$	$12x10^3$	$30x10^3$	$60x10^3$	$120x10^3$	$300x10^3$	$600x10^3$	$1.2x10^6$
0110 (÷7)	$7x10^3$	$14x10^3$	$35x10^3$	$70x10^3$	$140x10^3$	$350x10^3$	$700x10^3$	$1.4x10^6$
0111 (÷8)	$8x10^3$	$16x10^3$	$40x10^3$	$80x10^3$	$160x10^3$	$400x10^3$	$800x10^3$	$1.6x10^6$
1000 (÷9)	$9x10^3$	$18x10^3$	$45x10^3$	$90x10^3$	$180x10^3$	$450x10^3$	$900x10^3$	$1.8x10^6$
1001 (÷10)	$10\ x10^3$	$20x10^3$	$50x10^3$	$100x10^3$	$200x10^3$	$500x10^3$	$1x10^6$	$2x10^6$
1010 (÷11)	$11\ x10^3$	$22x10^3$	$55x10^3$	$110x10^3$	$220x10^3$	$550x10^3$	$1.1x10^6$	$2.2x10^6$
1011 (÷12)	$12x10^3$	$24x10^3$	$60x10^3$	$120x10^3$	$240x10^3$	$600x10^3$	$1.2x10^6$	$2.4x10^6$
1100 (÷13)	$13x10^3$	$26x10^3$	$65x10^3$	$130x10^3$	$260x10^3$	$650x10^3$	$1.3x10^6$	$2.6x10^6$
1101 (÷14)	$14x10^3$	$28x10^3$	$70x10^3$	$140x10^3$	$280x10^3$	$700x10^3$	$1.4x10^6$	$2.8x10^6$
1110 (÷15)	$15x10^3$	$30x10^3$	$75x10^3$	$150x10^3$	$300x10^3$	$750x10^3$	$1.5x10^6$	$3x10^6$
1111 (÷16)	$16x10^3$	$32x10^3$	$80x10^3$	$160x10^3$	$320x10^3$	$800x10^3$	$1.6x10^6$	$3.2x10^6$

10.3.2.9 S12CPMU COP Control Register (CPMUCOP)

This register controls the COP (Computer Operating Properly) watchdog.

The clock source for the COP is either ACLK, IRCCLK or OSCCLK depending on the setting of the COPOSCSEL0 and COPOSCSEL1 bit (see also Table 10-6).
In Stop Mode with PSTP=1 (Pseudo Stop Mode), COPOSCSEL0=1 and COPOSCEL1=0 and PCE=1 the COP continues to run, else the COP counter halts in Stop Mode with COPOSCSEL1 =0.
In Full Stop Mode and Pseudo Stop Mode with COPOSCSEL1=1 the COP continues to run.

0x003C

	7	6	5	4	3	2	1	0
R	WCOP	RSBCK	0	0	0	CR2	CR1	CR0
W			WRTMASK					
Reset	F	0	0	0	0	F	F	F

After de-assert of System Reset the values are automatically loaded from the Flash memory. See Device specification for details.

= Unimplemented or Reserved

Figure 10-12. S12CPMU COP Control Register (CPMUCOP)

Read: Anytime

Write:

1. RSBCK: Anytime in Special Mode; write to “1” but not to “0” in Normal Mode
2. WCOP, CR2, CR1, CR0:
   - Anytime in Special Mode, when WRTMASK is 0, otherwise it has no effect
   - Write once in Normal Mode, when WRTMASK is 0, otherwise it has no effect.
     - Writing CR[2:0] to “000” has no effect, but counts for the “write once” condition.
     - Writing WCOP to “0” has no effect, but counts for the “write once” condition.

When a non-zero value is loaded from Flash to CR[2:0] the COP time-out period is started.

A change of the COPOSCSEL0 or COPSOCSEL1 bit (writing a different value) or loosing UPOSC status while COPOSCSEL1 is clear and COPOSCSEL0 is set, re-starts the COP time-out period.

In Normal Mode the COP time-out period is restarted if either of these conditions is true:

1. Writing a non-zero value to CR[2:0] (anytime in Special Mode, once in Normal Mode) with WRTMASK = 0.
2. Writing WCOP bit (anytime in Special Mode, once in Normal Mode) with WRTMASK = 0.
3. Changing RSBCK bit from “0” to “1”.

In Special Mode, any write access to CPMUCOP register restarts the COP time-out period.

Table 10-12. CPMUCOP Field Descriptions

Field	Description
7 WCOP	**Window COP Mode Bit** — When set, a write to the CPMUARMCOP register must occur in the last 25% of the selected period. A write during the first 75% of the selected period generates a COP reset. As long as all writes occur during this window, $55 can be written as often as desired. Once $AA is written after the $55, the time-out logic restarts and the user must wait until the next window before writing to CPMUARMCOP. Table 10-13 shows the duration of this window for the seven available COP rates. 0 Normal COP operation 1 Window COP operation
6 RSBCK	COP and RTI Stop in Active BDM Mode Bit 0 Allows the COP and RTI to keep running in Active BDM mode. 1 Stops the COP and RTI counters whenever the part is in Active BDM mode.
5 WRTMASK	**Write Mask for WCOP and CR[2:0] Bit** — This write-only bit serves as a mask for the WCOP and CR[2:0] bits while writing the CPMUCOP register. It is intended for BDM writing the RSBCK without changing the content of WCOP and CR[2:0]. 0 Write of WCOP and CR[2:0] has an effect with this write of CPMUCOP 1 Write of WCOP and CR[2:0] has no effect with this write of CPMUCOP. (Does not count for “write once”.)
2–0 CR[2:0]	**COP Watchdog Timer Rate Select** — These bits select the COP time-out rate (see Table 10-13 and Table 10-14). Writing a nonzero value to CR[2:0] enables the COP counter and starts the time-out period. A COP counter time-out causes a System Reset. This can be avoided by periodically (before time-out) initializing the COP counter via the CPMUARMCOP register. While all of the following four conditions are true the CR[2:0], WCOP bits are ignored and the COP operates at highest time-out period (2^{24} cycles) in normal COP mode (Window COP mode disabled): 1) COP is enabled (CR[2:0] is not 000) 2) BDM mode active 3) RSBCK = 0 4) Operation in Special Mode

Table 10-13. COP Watchdog Rates if COPOSCSEL1=0 (default out of reset)

CR2	CR1	CR0	COPCLK Cycles to Time-out (COPCLK is either IRCCLK or OSCCLK depending on the COPOSCSEL0 bit)
0	0	0	COP disabled
0	0	1	2^{14}
0	1	0	2^{16}
0	1	1	2^{18}
1	0	0	2^{20}
1	0	1	2^{22}
1	1	0	2^{23}
1	1	1	2^{24}

Table 10-14. COP Watchdog Rates if COPOSCSEL1=1

CR2	CR1	CR0	COPCLK Cycles to Time-out (COPCLK is ACLK - internal RC-Oscillator clock)
0	0	0	COP disabled
0	0	1	2^{7}
0	1	0	2^{9}
0	1	1	2^{11}
1	0	0	2^{13}
1	0	1	2^{15}
1	1	0	2^{16}
1	1	1	2^{17}

10.3.2.10 Reserved Register CPMUTEST0

NOTE

This reserved register is designed for factory test purposes only, and is not intended for general user access. Writing to this register when in Special Mode can alter the S12CPMU's functionality.

0x003D

	7	6	5	4	3	2	1	0
R	0	0	0	0	0	0	0	0
W								
Reset	0	0	0	0	0	0	0	0

= Unimplemented or Reserved

Figure 10-13. Reserved Register (CPMUTEST0)

Read: Anytime

Write: Only in Special Mode

10.3.2.11 Reserved Register CPMUTEST1

NOTE

This reserved register is designed for factory test purposes only, and is not intended for general user access. Writing to this register when in Special Mode can alter the S12CPMU's functionality.

0x003E

	7	6	5	4	3	2	1	0
R	0	0	0	0	0	0	0	0
W								
Reset	0	0	0	0	0	0	0	0

= Unimplemented or Reserved

Figure 10-14. Reserved Register (CPMUTEST1)

Read: Anytime

Write: Only in Special Mode

10.3.2.12 S12CPMU COP Timer Arm/Reset Register (CPMUARMCOP)

This register is used to restart the COP time-out period.

0x003F

	7	6	5	4	3	2	1	0
R	0	0	0	0	0	0	0	0
W	ARMCOP-Bit 7	ARMCOP-Bit 6	ARMCOP-Bit 5	ARMCOP-Bit 4	ARMCOP-Bit 3	ARMCOP-Bit 2	ARMCOP-Bit 1	ARMCOP-Bit 0
Reset	0	0	0	0	0	0	0	0

Figure 10-15. S12CPMU CPMUARMCOP Register

Read: Always reads $00

Write: Anytime

When the COP is disabled (CR[2:0] = “000”) writing to this register has no effect.

When the COP is enabled by setting CR[2:0] nonzero, the following applies:

Writing any value other than $55 or $AA causes a COP reset. To restart the COP time-out period write $55 followed by a write of $AA. These writes do not need to occur back-to-back, but the sequence ($55, $AA) must be completed prior to COP end of time-out period to avoid a COP reset. Sequences of $55 writes are allowed. When the WCOP bit is set, $55 and $AA writes must be done in the last 25% of the selected time-out period; writing any value in the first 75% of the selected period will cause a COP reset.

10.3.2.13 Low Voltage Control Register (CPMULVCTL)

The CPMULVCTL register allows the configuration of the low-voltage detect features.

0x02F1

	7	6	5	4	3	2	1	0
R	0	0	0	0	0	LVDS	LVIE	LVIF
W								
Reset	0	0	0	0	0	U	0	U

The Reset state of LVDS and LVIF depends on the external supplied VDDA level

= Unimplemented or Reserved

Figure 10-16. Low Voltage Control Register (CPMULVCTL)

Read: Anytime

Write: LVIE and LVIF are write anytime, LVDS is read only

Table 10-15. CPMULVCTL Field Descriptions

Field	Description
2 LVDS	**Low-Voltage Detect Status Bit** — This read-only status bit reflects the voltage level on VDDA. Writes have no effect. 0 Input voltage VDDA is above level V_{LVID} or RPM. 1 Input voltage VDDA is below level V_{LVIA} and FPM.
1 LVIE	Low-Voltage Interrupt Enable Bit 0 Interrupt request is disabled. 1 Interrupt will be requested whenever LVIF is set.
0 LVIF	**Low-Voltage Interrupt Flag** — LVIF is set to 1 when LVDS status bit changes. This flag can only be cleared by writing a 1. Writing a 0 has no effect. If enabled (LVIE = 1), LVIF causes an interrupt request. 0 No change in LVDS bit. 1 LVDS bit has changed.

10.3.2.14 Autonomous Periodical Interrupt Control Register (CPMUAPICTL)

The CPMUAPICTL register allows the configuration of the autonomous periodical interrupt features.

0x02F2

	7	6	5	4	3	2	1	0
R	APICLK	0	0	APIES	APIEA	APIFE	APIE	APIF
W								
Reset	0	0	0	0	0	0	0	0

= Unimplemented or Reserved

Figure 10-17. Autonomous Periodical Interrupt Control Register (CPMUAPICTL)

Read: Anytime

Write: Anytime

Table 10-16. CPMUAPICTL Field Descriptions

Field	Description
7 APICLK	**Autonomous Periodical Interrupt Clock Select Bit** — Selects the clock source for the API. Writable only if APIFE = 0. APICLK cannot be changed if APIFE is set by the same write operation. 0 Autonomous Clock (ACLK) used as source. 1 Bus Clock used as source.
4 APIES	**Autonomous Periodical Interrupt External Select Bit** — Selects the waveform at the external pin API_EXTCLK as shown in Figure 10-18. See device level specification for connectivity of API_EXTCLK pin. 0 If APIEA and APIFE are set, at the external pin API_EXTCLK periodic high pulses are visible at the end of every selected period with the size of half of the minimum period (APIR=0x0000 in Table 10-20). 1 If APIEA and APIFE are set, at the external pin API_EXTCLK a clock is visible with 2 times the selected API Period.
3 APIEA	**Autonomous Periodical Interrupt External Access Enable Bit** — If set, the waveform selected by bit APIES can be accessed externally. See device level specification for connectivity. 0 Waveform selected by APIES can not be accessed externally. 1 Waveform selected by APIES can be accessed externally, if APIFE is set.
2 APIFE	**Autonomous Periodical Interrupt Feature Enable Bit** — Enables the API feature and starts the API timer when set. 0 Autonomous periodical interrupt is disabled. 1 Autonomous periodical interrupt is enabled and timer starts running.
1 APIE	Autonomous Periodical Interrupt Enable Bit 0 API interrupt request is disabled. 1 API interrupt will be requested whenever APIF is set.
0 APIF	**Autonomous Periodical Interrupt Flag** — After each time-out of the API (time-out rate is configured in the CPMUAPIRH/L registers) the interrupt flag APIF is set to 1. This flag can only be cleared by writing a 1. Writing a 0 has no effect. If enabled (APIE = 1), APIF causes an interrupt request. 0 API time-out has not yet occurred. 1 API time-out has occurred.

Figure 10-18. Waveform selected on API_EXTCLK pin (APIEA=1, APIFE=1)

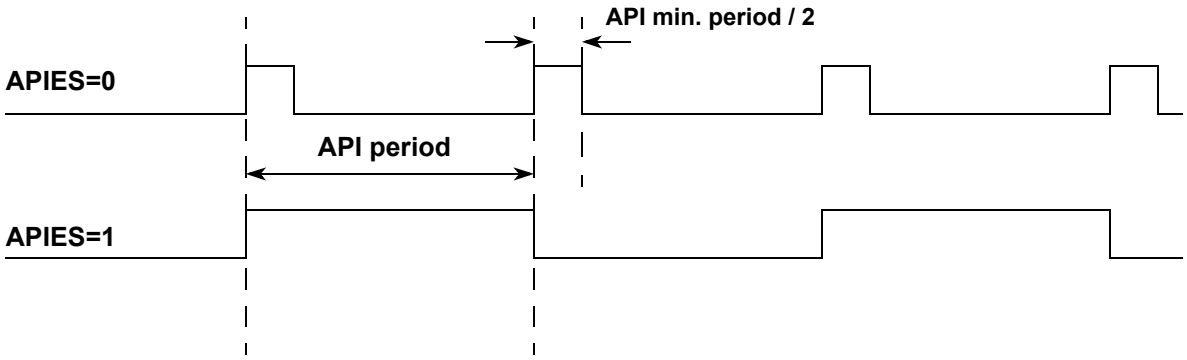

10.3.2.15 Autonomous Clock Trimming Register (CPMUACLKTR)

The CPMUACLKTR register configures the trimming of the Autonomous Clock (ACLK - trimmable internal RC-Oscillator) which can be selected as clock source for some CPMU features.

0x02F3

	7	6	5	4	3	2	1	0
R	ACLKTR5	ACLKTR4	ACLKTR3	ACLKTR2	ACLKTR1	ACLKTR0	0	0
W								
Reset	F	F	F	F	F	F	0	0

After de-assert of System Reset a value is automatically loaded from the Flash memory.

Figure 10-19. Autonomous Periodical Interrupt Trimming Register (CPMUACLKTR)

Read: Anytime

Write: Anytime

Table 10-17. CPMUACLKTR Field Descriptions

Field	Description
7–2 ACLKTR[5:0]	**Autonomous Clock Trimming Bits** — See Table 10-18 for trimming effects. The ACLKTR[5:0] value represents a signed number influencing the ACLK period time.

Table 10-18. Trimming Effect of ACLKTR

Bit	Trimming Effect
ACLKTR[5]	Increases period
ACLKTR[4]	Decreases period less than ACLKTR[5] increased it
ACLKTR[3]	Decreases period less than ACLKTR[4]
ACLKTR[2]	Decreases period less than ACLKTR[3]
ACLKTR[1]	Decreases period less than ACLKTR[2]
ACLKTR[0]	Decreases period less than ACLKTR[1]

10.3.2.16 Autonomous Periodical Interrupt Rate High and Low Register (CPMUAPIRH / CPMUAPIRL)

The CPMUAPIRH and CPMUAPIRL registers allow the configuration of the autonomous periodical interrupt rate.

0x02F4

	7	6	5	4	3	2	1	0
R W	APIR15	APIR14	APIR13	APIR12	APIR11	APIR10	APIR9	APIR8
Reset	0	0	0	0	0	0	0	0

= Unimplemented or Reserved

Figure 10-20. Autonomous Periodical Interrupt Rate High Register (CPMUAPIRH)

0x02F5

	7	6	5	4	3	2	1	0
R W	APIR7	APIR6	APIR5	APIR4	APIR3	APIR2	APIR1	APIR0
Reset	0	0	0	0	0	0	0	0

Figure 10-21. Autonomous Periodical Interrupt Rate Low Register (CPMUAPIRL)

Read: Anytime

Write: Anytime if APIFE=0. Else writes have no effect.

Table 10-19. CPMUAPIRH / CPMUAPIRL Field Descriptions

Field	Description
15-0 APIR[15:0]	**Autonomous Periodical Interrupt Rate Bits** — These bits define the time-out period of the API. See Table 10-20 for details of the effect of the autonomous periodical interrupt rate bits.

The period can be calculated as follows depending on logical value of the APICLK bit:

APICLK=0: Period = 2*(APIR[15:0] + 1) * ACLK Clock Period
APICLK=1: Period = 2*(APIR[15:0] + 1) * Bus Clock period

NOTE

For APICLK bit clear the first time-out period of the API will show a latency time between two to three f_{ACLK} cycles due to synchronous clock gate release when the API feature gets enabled (APIFE bit set).

Table 10-20. Selectable Autonomous Periodical Interrupt Periods

APICLK	APIR[15:0]	Selected Period
0	0000	0.2 ms[1]
0	0001	0.4 ms[1]
0	0002	0.6 ms[1]
0	0003	0.8 ms[1]

Table 10-20. Selectable Autonomous Periodical Interrupt Periods (continued)

APICLK	APIR[15:0]	Selected Period
0	0004	1.0 ms[1]
0	0005	1.2 ms[1]
0	.....	.....
0	FFFD	13106.8 ms[1]
0	FFFE	13107.0 ms[1]
0	FFFF	13107.2 ms[1]
1	0000	2 * Bus Clock period
1	0001	4 * Bus Clock period
1	0002	6 * Bus Clock period
1	0003	8 * Bus Clock period
1	0004	10 * Bus Clock period
1	0005	12 * Bus Clock period
1	.....	.....
1	FFFD	131068 * Bus Clock period
1	FFFE	131070 * Bus Clock period
1	FFFF	131072 * Bus Clock period

1 When f_{ACLK} is trimmed to 10KHz.

10.3.2.17 Reserved Register CPMUTEST3

NOTE

This reserved register is designed for factory test purposes only, and is not intended for general user access. Writing to this register when in Special Mode can alter the S12CPMU's functionality.

0x02F6

	7	6	5	4	3	2	1	0
R	0	0	0	0	0	0	0	0
W								
Reset	0	0	0	0	0	0	0	0

= Unimplemented or Reserved

Figure 10-22. Reserved Register (CPMUTEST3)

Read: Anytime

Write: Only in Special Mode

10.3.2.18 S12CPMU IRC1M Trim Registers (CPMUIRCTRIMH / CPMUIRCTRIML)

0x02F8

	15	14	13	12	11	10	9	8
R	TCTRIM[4:0]					0	IRCTRIM[9:8]	
W								
Reset	F	F	F	F	0	0	F	F

After de-assert of System Reset a factory programmed trim value is automatically loaded from the Flash memory to provide trimmed Internal Reference Frequency f_{IRC1M_TRIM}.

Figure 10-23. S12CPMU IRC1M Trim High Register (CPMUIRCTRIMH)

0x02F9

	7	6	5	4	3	2	1	0
R	IRCTRIM[7:0]							
W								
Reset	F	F	F	F	F	F	F	F

After de-assert of System Reset a factory programmed trim value is automatically loaded from the Flash memory to provide trimmed Internal Reference Frequency f_{IRC1M_TRIM}.

Figure 10-24. S12CPMU IRC1M Trim Low Register (CPMUIRCTRIML)

Read: Anytime

Write: Anytime if PROT=0 (CPMUPROT register). Else write has no effect

NOTE

Writes to these registers while PLLSEL=1 clears the LOCK and UPOSC status bits.

Table 10-22. CPMUIRCTRIMH/L Field Descriptions

Field	Description
15-11 TCTRIM[4:0]	IRC1M temperature coefficient Trim Bits Trim bits for the Temperature Coefficient (TC) of the IRC1M frequency. Figure 10-26 shows the influence of the bits TCTRIM4:0] on the relationship between frequency and temperature. Figure 10-26 shows an approximate TC variation, relative to the nominal TC of the IRC1M (i.e. for TCTRIM[4:0]=0b00000 or 0b10000).
9-0 IRCTRIM[9:0]	**IRC1M Frequency Trim Bits** — Trim bits for Internal Reference Clock After System Reset the factory programmed trim value is automatically loaded into these registers, resulting in a Internal Reference Frequency f_{IRC1M_TRIM}. See device electrical characteristics for value of f_{IRC1M_TRIM}. The frequency trimming consists of two different trimming methods: A rough trimming controlled by bits IRCTRIM[9:6] can be done with frequency leaps of about 6% in average. A fine trimming controlled by the bits IRCTRIM[5:0] can be done with frequency leaps of about 0.3% (this trimming determines the precision of the frequency setting of 0.15%, i.e. 0.3% is the distance between two trimming values). Figure 10-25 shows the relationship between the trim bits and the resulting IRC1M frequency.

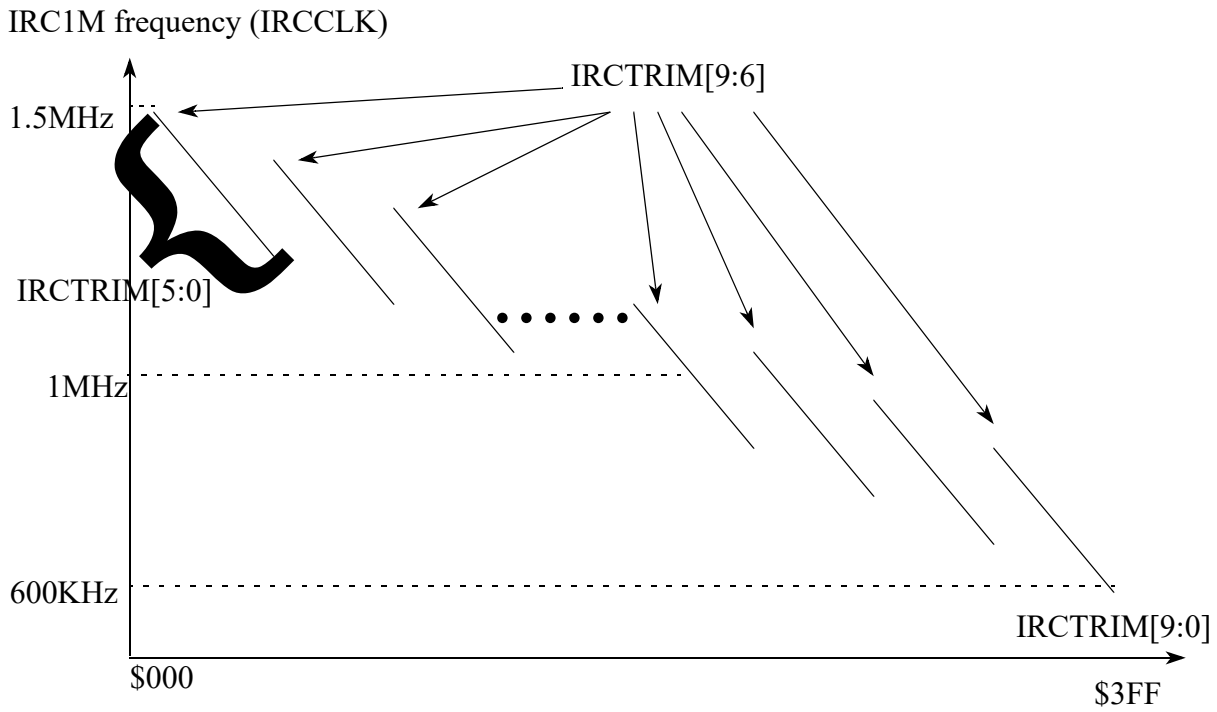

Figure 10-25. IRC1M Frequency Trimming Diagram

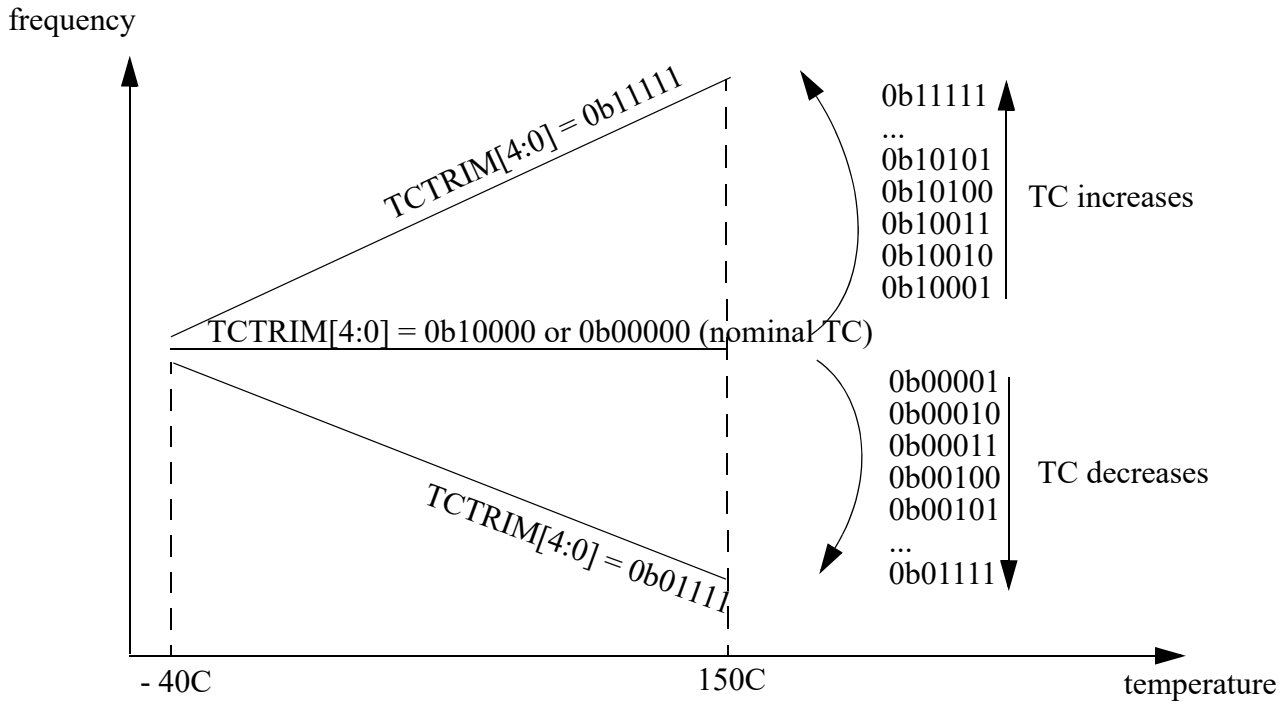

Figure 10-26. Influence of TCTRIM[4:0] on the Temperature Coefficient

NOTE

The frequency is not necessarily linear with the temperature (in most cases it will not be). The above diagram is meant only to give the direction (positive or negative) of the variation of the TC, relative to the nominal TC.

Setting TCTRIM[4:0] to 0b00000 or 0b10000 does not mean that the temperature coefficient will be zero. These two combinations basically switch off the TC compensation module, which results in the nominal TC of the IRC1M.

TCTRIM[4:0]	IRC1M indicative relative TC variation	IRC1M indicative frequency drift for relative TC variation
00000	0 (nominal TC of the IRC)	0%
00001	-0.27%	-0.5%
00010	-0.54%	-0.9%
00011	-0.81%	-1.3%
00100	-1.08%	-1.7%
00101	-1.35%	-2.0%
00110	-1.63%	-2.2%

TCTRIM[4:0]	IRC1M indicative relative TC variation	IRC1M indicative frequency drift for relative TC variation
00111	-1.9%	-2.5%
01000	-2.20%	-3.0%
01001	-2.47%	-3.4%
01010	-2.77%	-3.9%
01011	-3.04	-4.3%
01100	-3.33%	-4.7%
01101	-3.6%	-5.1%
01110	-3.91%	-5.6%
01111	-4.18%	-5.9%
10000	0 (nominal TC of the IRC)	0%
10001	+0.27%	+0.5%
10010	+0.54%	+0.9%
10011	+0.81%	+1.3%
10100	+1.07%	+1.7%
10101	+1.34%	+2.0%
10110	+1.59%	+2.2%
10111	+1.86%	+2.5%
11000	+2.11%	+3.0%
11001	+2.38%	+3.4%
11010	+2.62%	+3.9%
11011	+2.89%	+4.3%
11100	+3.12%	+4.7%
11101	+3.39%	+5.1%
11110	+3.62%	+5.6%
11111	+3.89%	+5.9%

Table 10-23. TC trimming of the IRC1M frequency at ambient temperature

NOTE

Since the IRC1M frequency is not a linear function of the temperature, but more like a parabola, the above relative variation is only an indication and should be considered with care.

Be aware that the output frequency vary with TC trimming. A frequency trimming correction is therefore necessary. The values provided in Table 10-23 are typical values at ambient temperature which can vary from device to device.

10.3.2.19 S12CPMU Oscillator Register (CPMUOSC)

This registers configures the external oscillator (XOSCLCP).

0x02FA

	7	6	5	4	3	2	1	0
R	OSCE	Reserved	OSCPINS_EN	Reserved]				
W								
Reset	0	0	0	0	0	0	0	0

Figure 10-27. S12CPMU Oscillator Register (CPMUOSC)

Read: Anytime

Write: Anytime if PROT=0 (CPMUPROT register) and PLLSEL=1 (CPMUCLKS register). Else write has no effect.

NOTE.

Write to this register clears the LOCK and UPOSC status bits.

Table 10-24. CPMUOSC Field Descriptions

Field	Description
7 OSCE	**Oscillator Enable Bit** — This bit enables the external oscillator (XOSCLCP). The UPOSC status bit in the CPMUFLG register indicates when the oscillation is stable and OSCCLK can be selected as Bus Clock or source of the COP or RTI. A loss of oscillation will lead to a clock monitor reset. 0 External oscillator is disabled. REFCLK for PLL is IRCCLK. 1 External oscillator is enabled.Clock monitor is enabled.External oscillator is qualified by PLLCLK REFCLK for PLL is the external oscillator clock divided by REFDIV. **Note:** When starting up the external oscillator (either by programming OSCE bit to 1 or on exit from Full Stop Mode with OSCE bit already 1) the software must wait for a minimum time equivalent to the startup-time of the external oscillator t_{UPOSC} before entering Pseudo Stop Mode.
6 Reserved	Do not alter this bit from its reset value. It is for Manufacturer use only and can change the PLL behavior.
5 OSCPINS_EN	Oscillator Pins EXTAL and XTAL Enable Bit If OSCE=1 this read-only bit is set. It can only be cleared with the next reset. Enabling the external oscillator reserves the EXTAL and XTAL pins exclusively for oscillator application. 0 EXTAL and XTAL pins are not reserved for oscillator. 1 EXTAL and XTAL pins exclusively reserved for oscillator.
4-0 Reserved	Do not alter these bits from their reset value. It is for Manufacturer use only and can change the PLL behavior.

10.3.2.20 S12CPMU Protection Register (CPMUPROT)

This register protects the following clock configuration registers from accidental overwrite:

CPMUSYNR, CPMUREFDIV, CPMUCLKS, CPMUPLL, CPMUIRCTRIMH/L and CPMUOSC

0x02FB

	7	6	5	4	3	2	1	0
R	0	0	0	0	0	0	0	PROT
W								
Reset	0	0	0	0	0	0	0	0

Figure 10-28. S12CPMU Protection Register (CPMUPROT)

Read: Anytime

Write: Anytime

Field	Description
0 PROT	**Clock Configuration Registers Protection Bit** — This bit protects the clock configuration registers from accidental overwrite (see list of affected registers above): Writing 0x26 to the CPMUPROT register clears the PROT bit, other write accesses set the PROT bit. 0 Protection of clock configuration registers is disabled. 1 Protection of clock configuration registers is enabled. (see list of protected registers above).

10.3.2.21 Reserved Register CPMUTEST2

NOTE

This reserved register is designed for factory test purposes only, and is not intended for general user access. Writing to this register when in Special Mode can alter the S12CPMU's functionality.

0x02FC

	7	6	5	4	3	2	1	0
R	0	0	0	0	0	0	0	0
W								
Reset	0	0	0	0	0	0	0	0

= Unimplemented or Reserved

Figure 10-29. Reserved Register CPMUTEST2

Read: Anytime

Write: Only in Special Mode

10.4 Functional Description

10.4.1 Phase Locked Loop with Internal Filter (PLL)

The PLL is used to generate a high speed PLLCLK based on a low frequency REFCLK.

The REFCLK is by default the IRCCLK which is trimmed to f_{IRC1M_TRIM}=1MHz.

If using the oscillator (OSCE=1) REFCLK will be based on OSCCLK. For increased flexibility, OSCCLK can be divided in a range of 1 to 16 to generate the reference frequency REFCLK using the REFDIV[3:0] bits. Based on the SYNDIV[5:0] bits the PLL generates the VCOCLK by multiplying the reference clock by a 2, 4, 6,... 126, 128. Based on the POSTDIV[4:0] bits the VCOCLK can be divided in a range of 1,2, 3, 4, 5, 6,... to 32 to generate the PLLCLK.

If oscillator is enabled (OSCE=1) $$f_{REF} = \frac{f_{OSC}}{(REFDIV + 1)}$$

If oscillator is disabled (OSCE=0) $$f_{REF} = f_{IRC1M}$$

$$f_{VCO} = 2 \times f_{REF} \times (SYNDIV + 1)$$

If PLL is locked (LOCK=1) $$f_{PLL} = \frac{f_{VCO}}{(POSTDIV + 1)}$$

If PLL is not locked (LOCK=0) $$f_{PLL} = \frac{f_{VCO}}{4}$$

If PLL is selected (PLLSEL=1) $$f_{bus} = \frac{f_{PLL}}{2}$$

NOTE

Although it is possible to set the dividers to command a very high clock frequency, do not exceed the specified bus frequency limit for the MCU.

Several examples of PLL divider settings are shown in Table 10-25. The following rules help to achieve optimum stability and shortest lock time:

- Use lowest possible f_{VCO} / f_{REF} ratio (SYNDIV value).
- Use highest possible REFCLK frequency f_{REF}.

Table 10-25. Examples of PLL Divider Settings

f_{osc}	REFDIV[3:0]	f_{REF}	REFFRQ[1:0]	SYNDIV[5:0]	f_{VCO}	VCOFRQ[1:0]	POSTDIV[4:0]	f_{PLL}	f_{bus}
off	$00	1MHz	00	$18	50MHz	01	$03	12.5MHz	6.25MHz

Table 10-25. Examples of PLL Divider Settings

f_{osc}	REFDIV[3:0]	f_{REF}	REFFRQ[1:0]	SYNDIV[5:0]	f_{VCO}	VCOFRQ[1:0]	POSTDIV[4:0]	f_{PLL}	f_{bus}
off	$00	1MHz	00	$18	50MHz	01	$00	50MHz	25MHz
4MHz	$00	4MHz	01	$05	48MHz	00	$00	48MHz	24MHz

The phase detector inside the PLL compares the feedback clock (FBCLK = VCOCLK/(SYNDIV+1)) with the reference clock (REFCLK = (IRC1M or OSCCLK)/(REFDIV+1)). Correction pulses are generated based on the phase difference between the two signals. The loop filter alters the DC voltage on the internal filter capacitor, based on the width and direction of the correction pulse, which leads to a higher or lower VCO frequency.

The user must select the range of the REFCLK frequency (REFFRQ[1:0] bits) and the range of the VCOCLK frequency (VCOFRQ[1:0] bits) to ensure that the correct PLL loop bandwidth is set.

The lock detector compares the frequencies of the FBCLK and the REFCLK. Therefore the speed of the lock detector is directly proportional to the reference clock frequency. The circuit determines the lock condition based on this comparison.

If PLL LOCK interrupt requests are enabled, the software can wait for an interrupt request and for instance check the LOCK bit. If interrupt requests are disabled, software can poll the LOCK bit continuously (during PLL start-up) or at periodic intervals. In either case, only when the LOCK bit is set, the VCOCLK will have stabilized to the programmed frequency.

- The LOCK bit is a read-only indicator of the locked state of the PLL.
- The LOCK bit is set when the VCO frequency is within the tolerance Δ_{Lock} and is cleared when the VCO frequency is out of the tolerance Δ_{unl}.
- Interrupt requests can occur if enabled (LOCKIE = 1) when the lock condition changes, toggling the LOCK bit.

10.4.2 Startup from Reset

An example of startup of clock system from Reset is given in Figure 10-30.

Figure 10-30. Startup of clock system after Reset

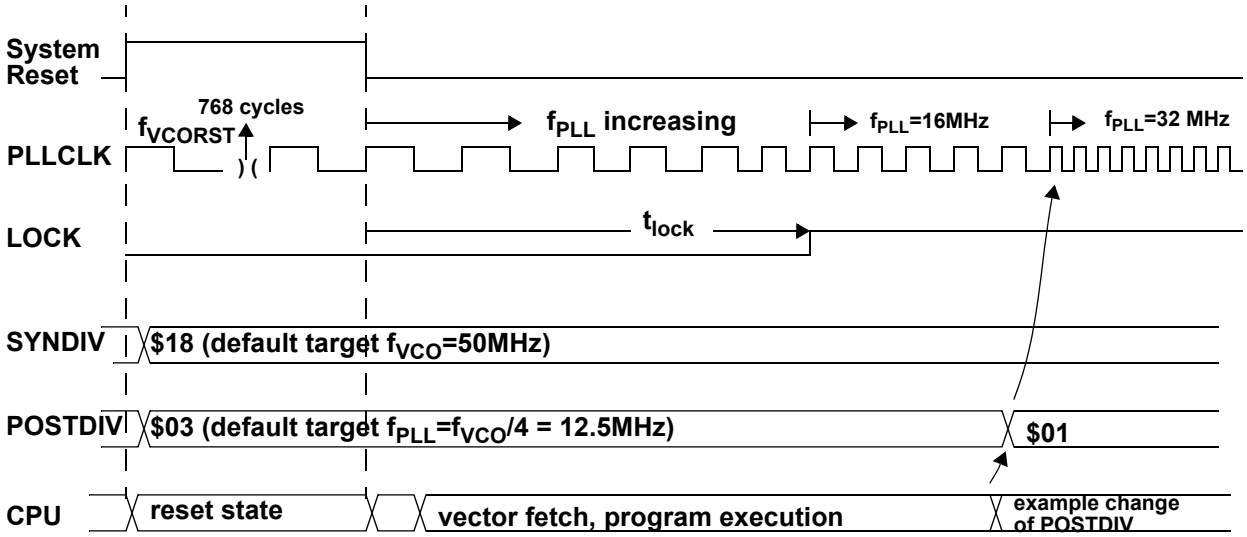

10.4.3 Stop Mode using PLLCLK as Bus Clock

An example of what happens going into Stop Mode and exiting Stop Mode after an interrupt is shown in Figure 10-31. Disable PLL Lock interrupt (LOCKIE=0) before going into Stop Mode.

Figure 10-31. Stop Mode using PLLCLK as Bus Clock

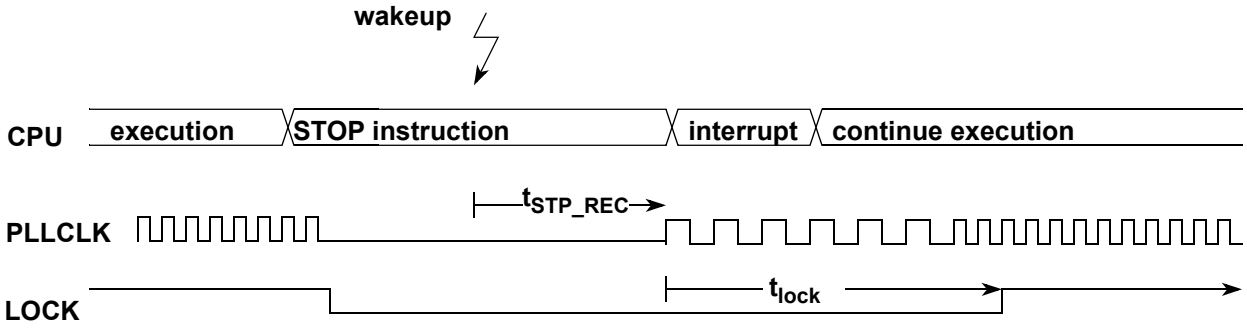

10.4.4 Full Stop Mode using Oscillator Clock as Bus Clock

An example of what happens going into Full Stop Mode and exiting Full Stop Mode after an interrupt is shown in Figure 10-32.

Disable PLL Lock interrupt (LOCKIE=0) and oscillator status change interrupt (OSCIE=0) before going into Full Stop Mode.

Figure 10-32. Full Stop Mode using Oscillator Clock as Bus Clock

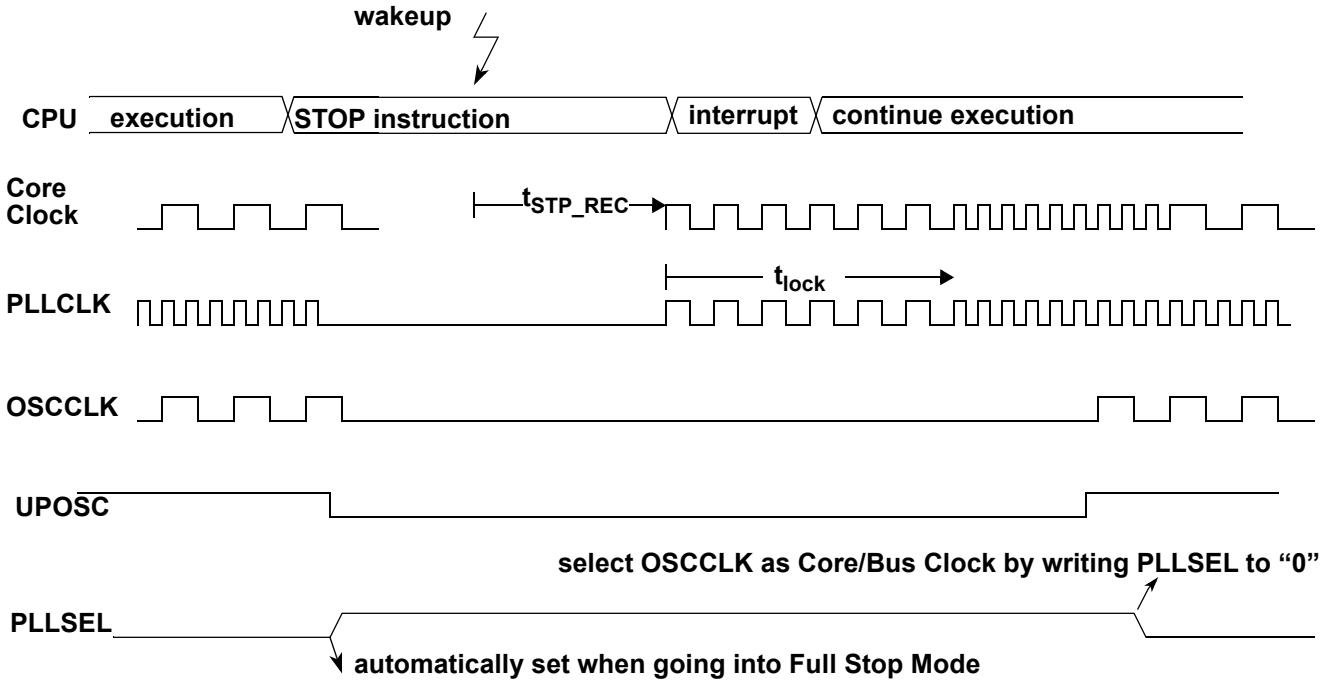

10.4.5 External Oscillator

10.4.5.1 Enabling the External Oscillator

An example of how to use the oscillator as Bus Clock is shown in Figure 10-33.

Figure 10-33. Enabling the External Oscillator

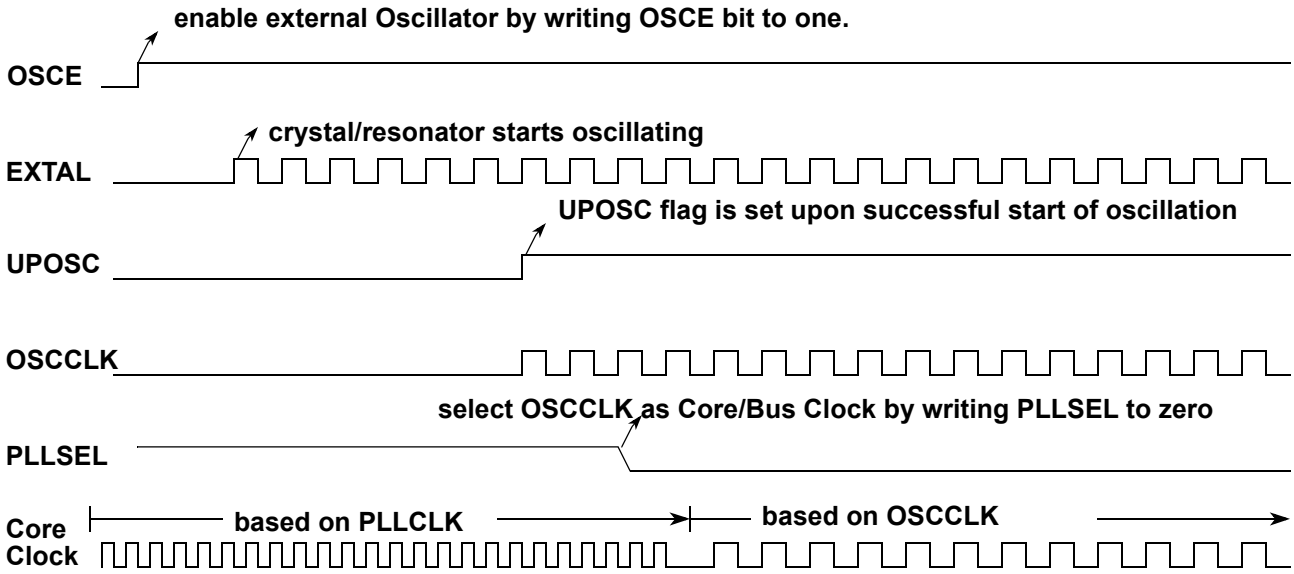

10.4.6 System Clock Configurations

10.4.6.1 PLL Engaged Internal Mode (PEI)

This mode is the default mode after System Reset or Power-On Reset.

The Bus clock is based on the PLLCLK, the reference clock for the PLL is internally generated (IRC1M). The PLL is configured to 50 MHz VCOCLK with POSTDIV set to 0x03. If locked (LOCK=1) this results in a PLLCLK of 12.5 MHz and a Bus clock of 6.25 MHz. The PLL can be re-configured to other bus frequencies.

The clock sources for COP and RTI can be based on the internal reference clock generator (IRC1M) or the RC-Oscillator (ACLK).

10.4.6.2 PLL Engaged External Mode (PEE)

In this mode, the Bus clock is based on the PLLCLK as well (like PEI). The reference clock for the PLL is based on the external oscillator.

The clock sources for COP and RTI can be based on the internal reference clock generator or on the external oscillator clock or the RC-Oscillator (ACLK).

This mode can be entered from default mode PEI by performing the following steps:

1. Configure the PLL for desired bus frequency.
2. Enable the external oscillator (OSCE bit).
3. Wait for oscillator to start-up and the PLL being locked (LOCK = 1) and (UPOSC =1).

4. Clear all flags in the CPMUFLG register to be able to detect any future status bit change.
5. Optionally status interrupts can be enabled (CPMUINT register).

Loosing PLL lock status (LOCK=0) means loosing the oscillator status information as well (UPOSC=0).

The impact of loosing the oscillator status (UPOSC=0) in PEE mode is as follows:

- The PLLCLK is derived from the VCO clock (with its actual frequency) divided by four until the PLL locks again.
- The OSCCLK provided to the MSCAN module is off.

Application software needs to be prepared to deal with the impact of loosing the oscillator status at any time.

10.4.6.3 PLL Bypassed External Mode (PBE)

In this mode, the Bus Clock is based on the external oscillator clock. The reference clock for the PLL is based on the external oscillator.

The clock sources for COP and RTI can be based on the internal reference clock generator or on the external oscillator clock or the RC-Oscillator (ACLK).

This mode can be entered from default mode PEI by performing the following steps:

1. Make sure the PLL configuration is valid.
2. Enable the external oscillator (OSCE bit)
3. Wait for the oscillator to start-up and the PLL being locked (LOCK = 1) and (UPOSC =1).
4. Clear all flags in the CPMUFLG register to be able to detect any status bit change.
5. Optionally status interrupts can be enabled (CPMUINT register).
6. Select the Oscillator Clock (OSCCLK) as Bus Clock (PLLSEL=0)

Loosing PLL lock status (LOCK=0) means loosing the oscillator status information as well (UPOSC=0).

The impact of loosing the oscillator status (UPOSC=0) in PBE mode is as follows:

- PLLSEL is set automatically and the Bus Clock is switched back to the PLLCLK.
- The PLLCLK is derived from the VCO clock (with its actual frequency) divided by four until the PLL locks again.
- The OSCCLK provided to the MSCAN module is off.

Application software needs to be prepared to deal with the impact of loosing the oscillator status at any time.

10.5 Resets

10.5.1 General

All reset sources are listed in Table 10-26. Refer to MCU specification for related vector addresses and priorities.

Table 10-26. Reset Summary

Reset Source	Local Enable
Power-On Reset (POR)	None
Low Voltage Reset (LVR)	None
External pin $\overline{\text{RESET}}$	None
Illegal Address Reset	None
Clock Monitor Reset	OSCE Bit in CPMUOSC register
COP Reset	CR[2:0] in CPMUCOP register

10.5.2 Description of Reset Operation

Upon detection of any reset of Table 10-26, an internal circuit drives the $\overline{\text{RESET}}$ pin low for 512 PLLCLK cycles. After 512 PLLCLK cycles the $\overline{\text{RESET}}$ pin is released. The reset generator of the S12CPMU waits for additional 256 PLLCLK cycles and then samples the $\overline{\text{RESET}}$ pin to determine the originating source. Table 10-27 shows which vector will be fetched.

Table 10-27. Reset Vector Selection

Sampled $\overline{\text{RESET}}$ Pin (256 cycles after release)	Oscillator monitor fail pending	COP time out pending	Vector Fetch
1	0	0	POR LVR Illegal Address Reset External pin $\overline{\text{RESET}}$
1	1	X	Clock Monitor Reset
1	0	1	COP Reset
0	X	X	POR LVR Illegal Address Reset External pin $\overline{\text{RESET}}$

NOTE

While System Reset is asserted the PLLCLK runs with the frequency f_{VCORST}.

The internal reset of the MCU remains asserted while the reset generator completes the 768 PLLCLK cycles long reset sequence. In case the RESET pin is externally driven low for more than these 768 PLLCLK cycles (External Reset), the internal reset remains asserted longer.

Figure 10-34. RESET Timing

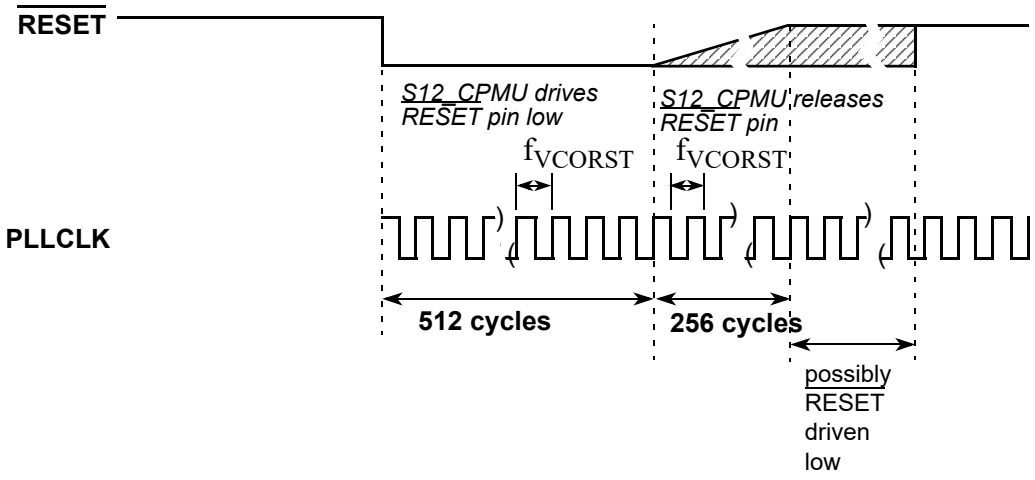

10.5.2.1 Clock Monitor Reset

If the external oscillator is enabled (OSCE=1) in case of loss of oscillation or the oscillator frequency is below the failure assert frequency f_{CMFA} (see device electrical characteristics for values), the S12CPMU generates a Clock Monitor Reset.In Full Stop Mode the external oscillator and the clock monitor are disabled.

10.5.2.2 Computer Operating Properly Watchdog (COP) Reset

The COP (free running watchdog timer) enables the user to check that a program is running and sequencing properly. When the COP is being used, software is responsible for keeping the COP from timing out. If the COP times out it is an indication that the software is no longer being executed in the intended sequence; thus COP reset is generated.

The clock source for the COP is either ACLK, IRCCLK or OSCCLK depending on the setting of the COPOSCSEL0 and COPOSCSEL1 bit.
In Stop Mode with PSTP=1 (Pseudo Stop Mode), COPOSCSEL0=1 and COPOSCEL1=0 and PCE=1 the COP continues to run, else the COP counter halts in Stop Mode with COPOSCSEL1 =0.
In Pseudo Stop Mode and Full Stop Mode with COPOSCSEL1=1 the COP continues to run.

Table 10-28.gives an overview of the COP condition (run, static) in Stop Mode depending on legal configuration and status bit settings:

Table 10-28. COP condition (run, static) in Stop Mode

COPOSCSEL1	PSTP	PCE	COPOSCSEL0	OSCE	UPOSC	COP counter behavior in Stop Mode (clock source)
1	x	x	x	x	x	Run (ACLK)
0	1	1	1	1	1	Run (OSCCLK)
0	1	1	0	0	x	Static (IRCCLK)
0	1	1	0	1	x	Static (IRCCLK)
0	1	0	0	x	x	Static (IRCCLK)
0	1	0	1	1	1	Static (OSCCLK)
0	0	1	1	1	1	Static (OSCCLK)
0	0	1	0	1	x	Static (IRCCLK)
0	0	1	0	0	0	Static (IRCCLK)
0	0	0	1	1	1	Satic (OSCCLK)
0	0	0	0	1	1	Static (IRCCLK)
0	0	0	0	1	0	Static (IRCCLK)
0	0	0	0	0	0	Static (IRCCLK)

Three control bits in the CPMUCOP register allow selection of seven COP time-out periods.

When COP is enabled, the program must write $55 and $AA (in this order) to the CPMUARMCOP register during the selected time-out period. Once this is done, the COP time-out period is restarted. If the program fails to do this and the COP times out, a COP reset is generated. Also, if any value other than $55 or $AA is written, a COP reset is generated.

Windowed COP operation is enabled by setting WCOP in the CPMUCOP register. In this mode, writes to the CPMUARMCOP register to clear the COP timer must occur in the last 25% of the selected time-out period. A premature write will immediately reset the part.

10.5.3 Power-On Reset (POR)

The on-chip POR circuitry detects when the internal supply VDD drops below an appropriate voltage level. The POR is deasserted, if the internal supply VDD exceeds an appropriate voltage level (voltage levels are not specified in this document because this internal supply is not visible on device pins).

10.5.4 Low-Voltage Reset (LVR)

The on-chip LVR circuitry detects when one of the supply voltages VDD, VDDF or VDDX drops below an appropriate voltage level. If LVR is deasserted the MCU is fully operational at the specified maximum speed. The LVR assert and deassert levels for the supply voltage VDDX are V_{LVRXA} and V_{LVRXD} and are specified in the device Reference Manual.

10.6 Interrupts

The interrupt/reset vectors requested by the S12CPMU are listed in Table 10-29. Refer to MCU specification for related vector addresses and priorities.

Table 10-29. S12CPMU Interrupt Vectors

Interrupt Source	CCR Mask	Local Enable
RTI time-out interrupt	I bit	CPMUINT (RTIE)
PLL lock interrupt	I bit	CPMUINT (LOCKIE)
Oscillator status interrupt	I bit	CPMUINT (OSCIE)
Low voltage interrupt	I bit	CPMULVCTL (LVIE)
Autonomous Periodical Interrupt	I bit	CPMUAPICTL (APIE)

10.6.1 Description of Interrupt Operation

10.6.1.1 Real Time Interrupt (RTI)

The clock source for the RTI is either IRCCLK or OSCCLK depending on the setting of the RTIOSCSEL bit. In Stop Mode with PSTP=1 (Pseudo Stop Mode), RTIOSCSEL=1 and PRE=1 the RTI continues to run, else the RTI counter halts in Stop Mode.

The RTI can be used to generate hardware interrupts at a fixed periodic rate. If enabled (by setting RTIE=1), this interrupt will occur at the rate selected by the CPMURTI register. At the end of the RTI time-out period the RTIF flag is set to one and a new RTI time-out period starts immediately.

A write to the CPMURTI register restarts the RTI time-out period.

10.6.1.2 PLL Lock Interrupt

The S12CPMU generates a PLL Lock interrupt when the lock condition (LOCK status bit) of the PLL changes, either from a locked state to an unlocked state or vice versa. Lock interrupts are locally disabled by setting the LOCKIE bit to zero. The PLL Lock interrupt flag (LOCKIF) is set to 1 when the lock condition has changed, and is cleared to 0 by writing a 1 to the LOCKIF bit.

10.6.1.3 Oscillator Status Interrupt

When the OSCE bit is 0, then UPOSC stays 0. When OSCE = 1 the UPOSC bit is set after the LOCK bit is set.

Upon detection of a status change (UPOSC) the OSCIF flag is set. Going into Full Stop Mode or disabling the oscillator can also cause a status change of UPOSC.

Any change in PLL configuration or any other event which causes the PLL lock status to be cleared leads to a loss of the oscillator status information as well (UPOSC=0).

Oscillator status change interrupts are locally enabled with the OSCIE bit.

NOTE

Losing the oscillator status (UPOSC=0) affects the clock configuration of the system[1]. This needs to be dealt with in application software.

10.6.1.4 Low-Voltage Interrupt (LVI)

In FPM the input voltage VDDA $_{\text{is monitored}}$. Whenever VDDA drops below level $V_{LVIA,}$ the status bit LVDS is set to 1. When VDDA rises above level V_{LVID} the status bit LVDS is cleared to 0. An interrupt, indicated by flag LVIF = 1, is triggered by any change of the status bit LVDS if interrupt enable bit LVIE = 1.

10.6.1.5 Autonomous Periodical Interrupt (API)

The API sub-block can generate periodical interrupts independent of the clock source of the MCU. To enable the timer, the bit APIFE needs to be set.

The API timer is either clocked by the Autonomous Clock (ACLK - trimmable internal RC oscillator) or the Bus Clock. Timer operation will freeze when MCU clock source is selected and Bus Clock is turned off. The clock source can be selected with bit APICLK. APICLK can only be written when APIFE is not set.

The APIR[15:0] bits determine the interrupt period. APIR[15:0] can only be written when APIFE is cleared. As soon as APIFE is set, the timer starts running for the period selected by APIR[15:0] bits. When the configured time has elapsed, the flag APIF is set. An interrupt, indicated by flag APIF = 1, is triggered if interrupt enable bit APIE = 1. The timer is re-started automatically again after it has set APIF.

The procedure to change APICLK or APIR[15:0] is first to clear APIFE, then write to APICLK or APIR[15:0], and afterwards set APIFE.

The API Trimming bits ACLKTR[5:0] must be set so the minimum period equals 0.2 ms if stable frequency is desired.

See Table 10-18 for the trimming effect of ACLKTR[5:0].

NOTE

The first period after enabling the counter by APIFE might be reduced by API start up delay t_{sdel}.

It is possible to generate with the API a waveform at the external pin API_EXTCLK by setting APIFE and enabling the external access with setting APIEA.

1. For details please refer to “10.4.6 System Clock Configurations”

10.7 Initialization/Application Information

10.7.1 General Initialization information

Usually applications run in MCU Normal Mode.

It is recommended to write the CPMUCOP register in any case from the application program initialization routine after reset no matter if the COP is used in the application or not, even if a configuration is loaded via the flash memory after reset. By doing a “controlled” write access in MCU Normal Mode (with the right value for the application) the write once for the COP configuration bits (WCOP,CR[2:0]) takes place which protects these bits from further accidental change. In case of a program sequencing issue (code runaway) the COP configuration can not be accidentally modified anymore.

10.7.2 Application information for COP and API usage

In many applications the COP is used to check that the program is running and sequencing properly. Often the COP is kept running during Stop Mode and periodic wake-up events are needed to service the COP on time and maybe to check the system status.

For such an application it is recommended to use the ACLK as clock source for both COP and API. This guarantees lowest possible IDD current during Stop Mode. Additionally it eases software implementation using the same clock source for both, COP and API.

The Interrupt Service Routine (ISR) of the Autonomous Periodic Interrupt API should contain the write instruction to the CPMUARMCOP register. The value (byte) written is derived from the “main routine” (alternating sequence of $55 and $AA) of the application software.

Using this method, then in the case of a runtime or program sequencing issue the application “main routine” is not executed properly anymore and the alternating values are not provided properly. Hence the COP is written at the correct time (due to independent API interrupt request) but the wrong value is written (alternating sequence of $55 and $AA is no longer maintained) which causes a COP reset.

Chapter 11
Analog-to-Digital Converter (ADC10B8CV2)

Revision History

Version Number	Revision Date	Effective Date	Author	Description of Changes
V02.00	13 May 2009	13 May 2009		Initial version copied from V01.05, changed unused Bits in ATDDIEN to read logic 1
V02.01	17 Dec 2009	17 Dec 2009		Updated Table 11-15 Analog Input Channel Select Coding - description of internal channels. Updated register ATDDR (left/right justified result) description in section 11.3.2.12.1/11-424 and 11.3.2.12.2/11-425 and added Table 11-21 to improve feature description.
V02.02	09 Feb 2010	09 Feb 2010		Fixed typo in Table 11-9 - conversion result for 3mV and 10bit resolution
V02.03	26 Feb 2010	26 Feb 2010		Corrected Table 11-15 Analog Input Channel Select Coding - description of internal channels.
V02.04	14 Apr 2010	14 Apr 2010		Corrected typos to be in-line with SoC level pin naming conventions for VDDA, VSSA, VRL and VRH.
V02.05	25 Aug 2010	25 Aug 2010		Removed feature of conversion during STOP and general wording clean up done in Section 11.4, “Functional Description
V02.06	09 Sep 2010	09 Sep 2010		Update of internal only information.
V02.07	11 Feb 2011	11 Feb 2011		Connectivity Information regarding internal channel_6 added to Table 11-15.
V02.08	22. Jun 2012	22. Jun 2012		Updated register wirte access information in section 11.3.2.9/11-422
V02.09	29. Jun 2012	29 Jun 2012		Removed IP name in block diagram Figure 11-1
V02.10	02 Oct 2012	02 Oct 2012		Added user information to avoid maybe false external trigger events when enabling the external trigger mode (Section 11.4.2.1, “External Trigger Input).

11.1 Introduction

The ADC10B8C is a 8-channel, 10-bit, multiplexed input successive approximation analog-to-digital converter. Refer to device electrical specifications for ATD accuracy.

11.1.1 Features

- 8-, 10-bit resolution.
- Automatic return to low power after conversion sequence
- Automatic compare with interrupt for higher than or less/equal than programmable value
- Programmable sample time.
- Left/right justified result data.
- External trigger control.
- Sequence complete interrupt.
- Analog input multiplexer for 8 analog input channels.
- Special conversions for VRH, VRL, (VRL+VRH)/2.
- 1-to-8 conversion sequence lengths.
- Continuous conversion mode.
- Multiple channel scans.
- Configurable external trigger functionality on any AD channel or any of four additional trigger inputs. The four additional trigger inputs can be chip external or internal. Refer to device specification for availability and connectivity.
- Configurable location for channel wrap around (when converting multiple channels in a sequence).

11.1.2 Modes of Operation

11.1.2.1 Conversion Modes

There is software programmable selection between performing **single** or **continuous conversion** on a **single channel** or **multiple channels**.

11.1.2.2 MCU Operating Modes

- **Stop Mode**
  Entering Stop Mode aborts any conversion sequence in progress and if a sequence was aborted restarts it after exiting stop mode. This has the same effect/consequences as starting a conversion sequence with write to ATDCTL5. So after exiting from stop mode with a previously aborted sequence all flags are cleared etc.
- **Wait Mode**
  ADC10B8C behaves same in Run and Wait Mode. For reduced power consumption continuous conversions should be aborted before entering Wait mode.
- **Freeze Mode**
  In Freeze Mode the ADC10B8C will either continue or finish or stop converting according to the FRZ1 and FRZ0 bits. This is useful for debugging and emulation.

11.1.3 Block Diagram

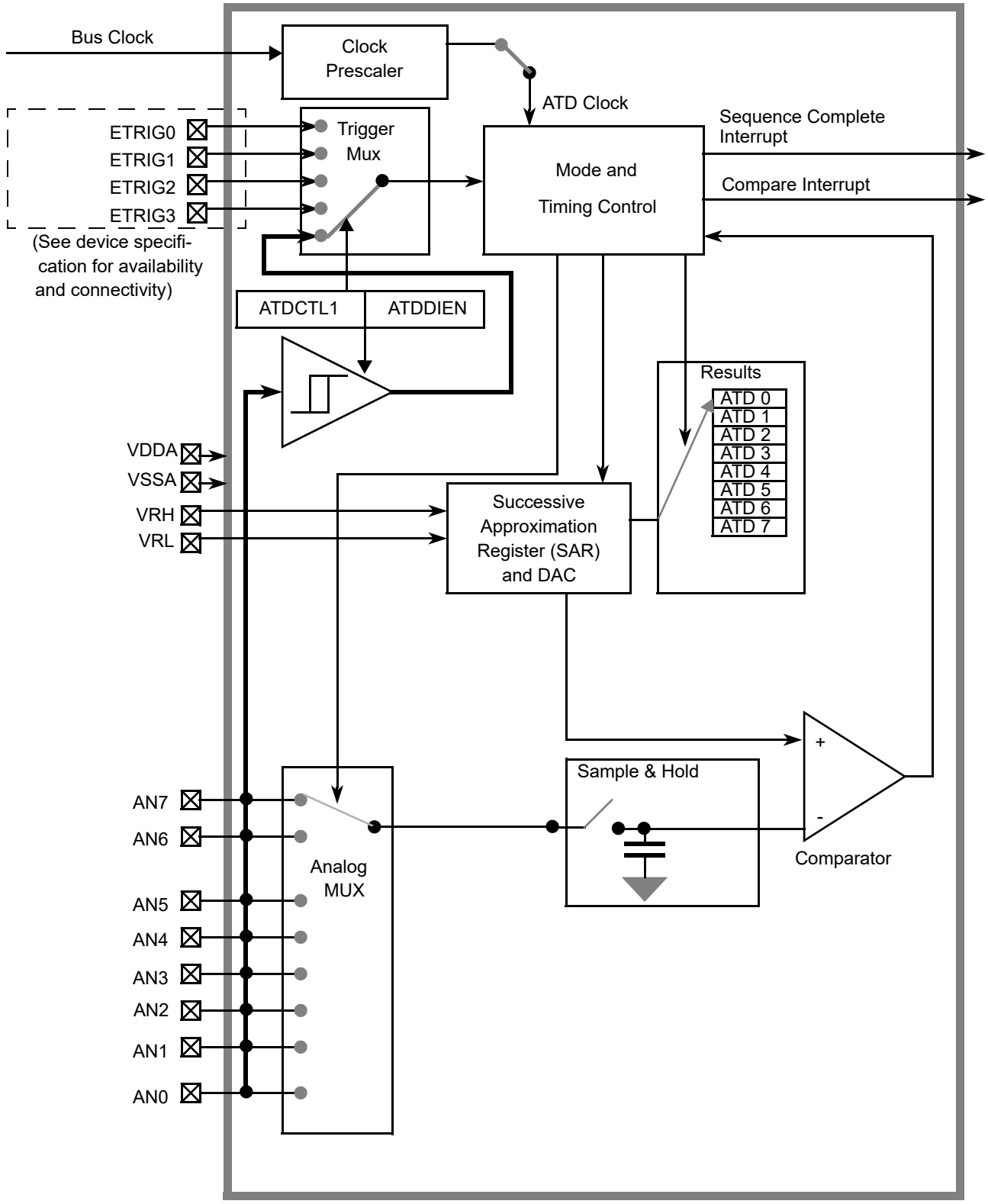

Figure 11-1. ADC10B8C Block Diagram

11.2 Signal Description

This section lists all inputs to the ADC10B8C block.

11.2.1 Detailed Signal Descriptions

11.2.1.1 AN*x* (*x* = 7, 6, 5, 4, 3, 2, 1, 0)

This pin serves as the analog input Channel *x*. It can also be configured as digital port or external trigger for the ATD conversion.

11.2.1.2 ETRIG3, ETRIG2, ETRIG1, ETRIG0

These inputs can be configured to serve as an external trigger for the ATD conversion.

Refer to device specification for availability and connectivity of these inputs!

11.2.1.3 VRH, VRL

VRH is the high reference voltage, VRL is the low reference voltage for ATD conversion.

11.2.1.4 VDDA, VSSA

These pins are the power supplies for the analog circuitry of the ADC10B8C block.

11.3 Memory Map and Register Definition

This section provides a detailed description of all registers accessible in the ADC10B8C.

11.3.1 Module Memory Map

Figure 11-2 gives an overview on all ADC10B8C registers.

NOTE

Register Address = Base Address + Address Offset, where the Base Address is defined at the MCU level and the Address Offset is defined at the module level.

Address	Name		Bit 7	6	5	4	3	2	1	Bit 0
0x0000	ATDCTL0	R W	Reserved	0	0	0	WRAP3	WRAP2	WRAP1	WRAP0
0x0001	ATDCTL1	R W	ETRIGSEL	SRES1	SRES0	SMP_DIS	ETRIGCH3	ETRIGCH2	ETRIGCH1	ETRIGCH0
0x0002	ATDCTL2	R W	0	AFFC	Reserved	ETRIGLE	ETRIGP	ETRIGE	ASCIE	ACMPIE

= Unimplemented or Reserved

Figure 11-2. ADC10B8C Register Summary (Sheet 1 of 2)

Address	Name		Bit 7	6	5	4	3	2	1	Bit 0
0x0003	ATDCTL3	R	DJM	S8C	S4C	S2C	S1C	FIFO	FRZ1	FRZ0
		W								
0x0004	ATDCTL4	R	SMP2	SMP1	SMP0	PRS[4:0]				
		W								
0x0005	ATDCTL5	R	0	SC	SCAN	MULT	CD	CC	CB	CA
		W								
0x0006	ATDSTAT0	R	SCF	0	ETORF	FIFOR	CC3	CC2	CC1	CC0
		W								
0x0007	Unimple-mented	R	0	0	0	0	0	0	0	0
		W								
0x0008	ATDCMPEH	R	0	0	0	0	0	0	0	0
		W								
0x0009	ATDCMPEL	R	CMPE[7:0]							
		W								
0x000A	ATDSTAT2H	R	0	0	0	0	0	0	0	0
		W								
0x000B	ATDSTAT2L	R	CCF[7:0]							
		W								
0x000C	ATDDIENH	R	1	1	1	1	1	1	1	1
		W								
0x000D	ATDDIENL	R	IEN[7:0]							
		W								
0x000E	ATDCMPHTH	R	0	0	0	0	0	0	0	0
		W								
0x000F	ATDCMPHTL	R	CMPHT[7:0]							
		W								
0x0010	ATDDR0	R	See Section 11.3.2.12.1, “Left Justified Result Data (DJM=0)” and Section 11.3.2.12.2, “Right Justified Result Data (DJM=1)”							
		W								
0x0012	ATDDR1	R	See Section 11.3.2.12.1, “Left Justified Result Data (DJM=0)” and Section 11.3.2.12.2, “Right Justified Result Data (DJM=1)”							
		W								
0x0014	ATDDR2	R	See Section 11.3.2.12.1, “Left Justified Result Data (DJM=0)” and Section 11.3.2.12.2, “Right Justified Result Data (DJM=1)”							
		W								
0x0016	ATDDR3	R	See Section 11.3.2.12.1, “Left Justified Result Data (DJM=0)” and Section 11.3.2.12.2, “Right Justified Result Data (DJM=1)”							
		W								
0x0018	ATDDR4	R	See Section 11.3.2.12.1, “Left Justified Result Data (DJM=0)” and Section 11.3.2.12.2, “Right Justified Result Data (DJM=1)”							
		W								
0x001A	ATDDR5	R	See Section 11.3.2.12.1, “Left Justified Result Data (DJM=0)” and Section 11.3.2.12.2, “Right Justified Result Data (DJM=1)”							
		W								
0x001C	ATDDR6	R	See Section 11.3.2.12.1, “Left Justified Result Data (DJM=0)” and Section 11.3.2.12.2, “Right Justified Result Data (DJM=1)”							
		W								
0x001E	ATDDR7	R	See Section 11.3.2.12.1, “Left Justified Result Data (DJM=0)” and Section 11.3.2.12.2, “Right Justified Result Data (DJM=1)”							
		W								
0x0020 - 0x002F	Unimple-mented	R	0	0	0	0	0	0	0	0
		W								

= Unimplemented or Reserved

Figure 11-2. ADC10B8C Register Summary (Sheet 2 of 2)

11.3.2 Register Descriptions

This section describes in address order all the ADC10B8C registers and their individual bits.

11.3.2.1 ATD Control Register 0 (ATDCTL0)

Writes to this register will abort current conversion sequence.

Module Base + 0x0000

	7	6	5	4	3	2	1	0
R	Reserved	0	0	0	WRAP3	WRAP2	WRAP1	WRAP0
W								
Reset	0	0	0	0	1	1	1	1

= Unimplemented or Reserved

Figure 11-3. ATD Control Register 0 (ATDCTL0)

Read: Anytime

Write: Anytime, in special modes always write 0 to Reserved Bit 7.

Table 11-1. ATDCTL0 Field Descriptions

Field	Description
3-0 WRAP[3-0]	**Wrap Around Channel Select Bits** — These bits determine the channel for wrap around when doing multi-channel conversions. The coding is summarized in Table 11-2.

Table 11-2. Multi-Channel Wrap Around Coding

WRAP3	WRAP2	WRAP1	WRAP0	Multiple Channel Conversions (MULT = 1) Wraparound to AN0 after Converting
0	0	0	0	Reserved[1]
0	0	0	1	AN1
0	0	1	0	AN2
0	0	1	1	AN3
0	1	0	0	AN4
0	1	0	1	AN5
0	1	1	0	AN6
0	1	1	1	AN7
1	0	0	0	AN7
1	0	0	1	AN7
1	0	1	0	AN7
1	0	1	1	AN7
1	1	0	0	AN7
1	1	0	1	AN7
1	1	1	0	AN7
1	1	1	1	AN7

[1]If only AN0 should be converted use MULT=0.

11.3.2.2 ATD Control Register 1 (ATDCTL1)

Writes to this register will abort current conversion sequence.

Module Base + 0x0001

	7	6	5	4	3	2	1	0
R W	ETRIGSEL	SRES1	SRES0	SMP_DIS	ETRIGCH3	ETRIGCH2	ETRIGCH1	ETRIGCH0
Reset	0	0	1	0	1	1	1	1

Figure 11-4. ATD Control Register 1 (ATDCTL1)

Read: Anytime

Write: Anytime

Table 11-3. ATDCTL1 Field Descriptions

Field	Description
7 ETRIGSEL	**External Trigger Source Select** — This bit selects the external trigger source to be either one of the AD channels or one of the ETRIG3-0 inputs. See device specification for availability and connectivity of ETRIG3-0 inputs. If a particular ETRIG3-0 input option is not available, writing a 1 to ETRISEL only sets the bit but has no effect, this means that one of the AD channels (selected by ETRIGCH3-0) is configured as the source for external trigger. The coding is summarized in Table 11-5.
6–5 SRES[1:0]	**A/D Resolution Select** — These bits select the resolution of A/D conversion results. See Table 11-4 for coding.
4 SMP_DIS	**Discharge Before Sampling Bit** 0 No discharge before sampling. 1 The internal sample capacitor is discharged before sampling the channel. This adds 2 ATD clock cycles to the sampling time. This can help to detect an open circuit instead of measuring the previous sampled channel.
3–0 ETRIGCH[3:0]	**External Trigger Channel Select** — These bits select one of the AD channels or one of the ETRIG3-0 inputs as source for the external trigger. The coding is summarized in Table 11-5.

Table 11-4. A/D Resolution Coding

SRES1	SRES0	A/D Resolution
0	0	8-bit data
0	1	10-bit data
1	0	Reserved
1	1	Reserved

Table 11-5. External Trigger Channel Select Coding

ETRIGSEL	ETRIGCH3	ETRIGCH2	ETRIGCH1	ETRIGCH0	External trigger source is
0	0	0	0	0	AN0
0	0	0	0	1	AN1
0	0	0	1	0	AN2
0	0	0	1	1	AN3
0	0	1	0	0	AN4
0	0	1	0	1	AN5
0	0	1	1	0	AN6
0	0	1	1	1	AN7
0	1	0	0	0	AN7
0	1	0	0	1	AN7
0	1	0	1	0	AN7
0	1	0	1	1	AN7
0	1	1	0	0	AN7
0	1	1	0	1	AN7
0	1	1	1	0	AN7
0	1	1	1	1	AN7
1	0	0	0	0	ETRIG0[1]
1	0	0	0	1	ETRIG1[1]
1	0	0	1	0	ETRIG2[1]
1	0	0	1	1	ETRIG3[1]
1	0	1	X	X	Reserved
1	1	X	X	X	Reserved

[1] Only if ETRIG3-0 input option is available (see device specification), else ETRISEL is ignored, that means external trigger source is still on one of the AD channels selected by ETRIGCH3-0

11.3.2.3 ATD Control Register 2 (ATDCTL2)

Writes to this register will abort current conversion sequence.

Module Base + 0x0002

	7	6	5	4	3	2	1	0
R	0	AFFC	Reserved	ETRIGLE	ETRIGP	ETRIGE	ASCIE	ACMPIE
W								
Reset	0	0	0	0	0	0	0	0

= Unimplemented or Reserved

Figure 11-5. ATD Control Register 2 (ATDCTL2)

Read: Anytime

Write: Anytime

Table 11-6. ATDCTL2 Field Descriptions

Field	Description
6 AFFC	**ATD Fast Flag Clear All** 0 ATD flag clearing done by write 1 to respective CCF[*n*] flag. 1 Changes all ATD conversion complete flags to a fast clear sequence. For compare disabled (CMPE[*n*]=0) a read access to the result register will cause the associated CCF[*n*] flag to clear automatically. For compare enabled (CMPE[*n*]=1) a write access to the result register will cause the associated CCF[*n*] flag to clear automatically.
5 Reserved	Do not alter this bit from its reset value.It is for Manufacturer use only and can change the ATD behavior.
4 ETRIGLE	**External Trigger Level/Edge Control** — This bit controls the sensitivity of the external trigger signal. See Table 11-7 for details.
3 ETRIGP	**External Trigger Polarity** — This bit controls the polarity of the external trigger signal. See Table 11-7 for details.
2 ETRIGE	**External Trigger Mode Enable** — This bit enables the external trigger on one of the AD channels or one of the ETRIG3-0 inputs as described in Table 11-5. If the external trigger source is one of the AD channels, the digital input buffer of this channel is enabled. The external trigger allows to synchronize the start of conversion with external events. 0 Disable external trigger 1 Enable external trigger
1 ASCIE	**ATD Sequence Complete Interrupt Enable** 0 ATD Sequence Complete interrupt requests are disabled. 1 ATD Sequence Complete interrupt will be requested whenever SCF=1 is set.
0 ACMPIE	**ATD Compare Interrupt Enable** — If automatic compare is enabled for conversion *n* (CMPE[*n*]=1 in ATDCMPE register) this bit enables the compare interrupt. If the CCF[*n*] flag is set (showing a successful compare for conversion *n*), the compare interrupt is triggered. 0 ATD Compare interrupt requests are disabled. 1 For the conversions in a sequence for which automatic compare is enabled (CMPE[*n*]=1), an ATD Compare Interrupt will be requested whenever any of the respective CCF flags is set.

Table 11-7. External Trigger Configurations

ETRIGLE	ETRIGP	External Trigger Sensitivity
0	0	Falling edge
0	1	Rising edge
1	0	Low level
1	1	High level

11.3.2.4 ATD Control Register 3 (ATDCTL3)

Writes to this register will abort current conversion sequence.

Module Base + 0x0003

	7	6	5	4	3	2	1	0
R W	DJM	S8C	S4C	S2C	S1C	FIFO	FRZ1	FRZ0
Reset	0	0	1	0	0	0	0	0

= Unimplemented or Reserved

Figure 11-6. ATD Control Register 3 (ATDCTL3)

Read: Anytime

Write: Anytime

Table 11-8. ATDCTL3 Field Descriptions

Field	Description
7 DJM	**Result Register Data Justification** — Result data format is always unsigned. This bit controls justification of conversion data in the result registers. 0 Left justified data in the result registers. 1 Right justified data in the result registers. Table 11-9 gives example ATD results for an input signal range between 0 and 5.12 Volts.
6–3 S8C, S4C, S2C, S1C	**Conversion Sequence Length** — These bits control the number of conversions per sequence. Table 11-10 shows all combinations. At reset, S4C is set to 1 (sequence length is 4). This is to maintain software continuity to HC12 family.
2 FIFO	**Result Register FIFO Mode** — If this bit is zero (non-FIFO mode), the A/D conversion results map into the result registers based on the conversion sequence; the result of the first conversion appears in the first result register (ATDDR0), the second result in the second result register (ATDDR1), and so on. If this bit is one (FIFO mode) the conversion counter is not reset at the beginning or end of a conversion sequence; sequential conversion results are placed in consecutive result registers. In a continuously scanning conversion sequence, the result register counter will wrap around when it reaches the end of the result register file. The conversion counter value (CC3-0 in ATDSTAT0) can be used to determine where in the result register file, the current conversion result will be placed. Aborting a conversion or starting a new conversion clears the conversion counter even if FIFO=1. So the first result of a new conversion sequence, started by writing to ATDCTL5, will always be place in the first result register (ATDDDR0). Intended usage of FIFO mode is continuos conversion (SCAN=1) or triggered conversion (ETRIG=1). Which result registers hold valid data can be tracked using the conversion complete flags. Fast flag clear mode may be useful in a particular application to track valid data. If this bit is one, automatic compare of result registers is always disabled, that is ADC10B8C will behave as if ACMPIE and all CPME[*n*] were zero. 0 Conversion results are placed in the corresponding result register up to the selected sequence length. 1 Conversion results are placed in consecutive result registers (wrap around at end).
1–0 FRZ[1:0]	**Background Debug Freeze Enable** — When debugging an application, it is useful in many cases to have the ATD pause when a breakpoint (Freeze Mode) is encountered. These 2 bits determine how the ATD will respond to a breakpoint as shown in Table 11-11. Leakage onto the storage node and comparator reference capacitors may compromise the accuracy of an immediately frozen conversion depending on the length of the freeze period.

Table 11-9. Examples of ideal decimal ATD Results

Input Signal VRL = 0 Volts VRH = 5.12 Volts	8-Bit Codes (resolution=20mV)	10-Bit Codes (resolution=5mV)	Reserved
5.120 Volts	255	1023	Reserved
...	...	...	
0.022	1	4	
0.020	1	4	
0.018	1	4	
0.016	1	3	
0.014	1	3	
0.012	1	2	
0.010	1	2	
0.008	0	2	
0.006	0	1	
0.004	0	1	
0.003	0	1	
0.002	0	0	
0.000	0	0	

Table 11-10. Conversion Sequence Length Coding

S8C	S4C	S2C	S1C	Number of Conversions per Sequence
0	0	0	0	8
0	0	0	1	1
0	0	1	0	2
0	0	1	1	3
0	1	0	0	4
0	1	0	1	5
0	1	1	0	6
0	1	1	1	7
1	0	0	0	8
1	0	0	1	8
1	0	1	0	8
1	0	1	1	8
1	1	0	0	8
1	1	0	1	8
1	1	1	0	8
1	1	1	1	8

Table 11-11. ATD Behavior in Freeze Mode (Breakpoint)

FRZ1	FRZ0	Behavior in Freeze Mode
0	0	Continue conversion

Table 11-11. ATD Behavior in Freeze Mode (Breakpoint)

FRZ1	FRZ0	Behavior in Freeze Mode
0	1	Reserved
1	0	Finish current conversion, then freeze
1	1	Freeze Immediately

11.3.2.5 ATD Control Register 4 (ATDCTL4)

Writes to this register will abort current conversion sequence.

Module Base + 0x0004

	7	6	5	4	3	2	1	0
R W	SMP2	SMP1	SMP0	PRS[4:0]				
Reset	0	0	0	0	0	1	0	1

Figure 11-7. ATD Control Register 4 (ATDCTL4)

Read: Anytime

Write: Anytime

Table 11-12. ATDCTL4 Field Descriptions

Field	Description
7–5 SMP[2:0]	**Sample Time Select** — These three bits select the length of the sample time in units of ATD conversion clock cycles. Note that the ATD conversion clock period is itself a function of the prescaler value (bits PRS4-0). Table 11-13 lists the available sample time lengths.
4–0 PRS[4:0]	**ATD Clock Prescaler** — These 5 bits are the binary prescaler value PRS. The ATD conversion clock frequency is calculated as follows: $f_{ATDCLK} = \frac{f_{BUS}}{2 \times (PRS + 1)}$ Refer to Device Specification for allowed frequency range of f_{ATDCLK}.

Table 11-13. Sample Time Select

SMP2	SMP1	SMP0	Sample Time in Number of ATD Clock Cycles
0	0	0	4
0	0	1	6
0	1	0	8
0	1	1	10
1	0	0	12
1	0	1	16
1	1	0	20
1	1	1	24

11.3.2.6 ATD Control Register 5 (ATDCTL5)

Writes to this register will abort current conversion sequence and start a new conversion sequence. If the external trigger function is enabled (ETRIGE=1) an initial write to ATDCTL5 is required to allow starting of a conversion sequence which will then occur on each trigger event. Start of conversion means the beginning of the sampling phase.

Module Base + 0x0005

	7	6	5	4	3	2	1	0
R	0	SC	SCAN	MULT	CD	CC	CB	CA
W								
Reset	0	0	0	0	0	0	0	0

= Unimplemented or Reserved

Figure 11-8. ATD Control Register 5 (ATDCTL5)

Read: Anytime

Write: Anytime

Table 11-14. ATDCTL5 Field Descriptions

Field	Description
6 SC	**Special Channel Conversion Bit** — If this bit is set, then special channel conversion can be selected using CD, CC, CB and CA of ATDCTL5. Table 11-15 lists the coding. 0 Special channel conversions disabled 1 Special channel conversions enabled
5 SCAN	**Continuous Conversion Sequence Mode** — This bit selects whether conversion sequences are performed continuously or only once. If the external trigger function is enabled (ETRIGE=1) setting this bit has no effect, thus the external trigger always starts a single conversion sequence. 0 Single conversion sequence 1 Continuous conversion sequences (scan mode)
4 MULT	**Multi-Channel Sample Mode** — When MULT is 0, the ATD sequence controller samples only from the specified analog input channel for an entire conversion sequence. The analog channel is selected by channel selection code (control bits CD/CC/CB/CA located in ATDCTL5). When MULT is 1, the ATD sequence controller samples across channels. The number of channels sampled is determined by the sequence length value (S8C, S4C, S2C, S1C). The first analog channel examined is determined by channel selection code (CD, CC, CB, CA control bits); subsequent channels sampled in the sequence are determined by incrementing the channel selection code or wrapping around to AN0 (channel 0). 0 Sample only one channel 1 Sample across several channels
3–0 CD, CC, CB, CA	**Analog Input Channel Select Code** — These bits select the analog input channel(s). Table 11-15 lists the coding used to select the various analog input channels. In the case of single channel conversions (MULT=0), this selection code specifies the channel to be examined. In the case of multiple channel conversions (MULT=1), this selection code specifies the first channel to be examined in the conversion sequence. Subsequent channels are determined by incrementing the channel selection code or wrapping around to AN0 (after converting the channel defined by the Wrap Around Channel Select Bits WRAP3-0 in ATDCTL0). When starting with a channel number higher than the one defined by WRAP3-0 the first wrap around will be AN7 to AN0.

Table 11-15. Analog Input Channel Select Coding

SC	CD	CC	CB	CA	Analog Input Channel
0	0	0	0	0	AN0
	0	0	0	1	AN1
	0	0	1	0	AN2
	0	0	1	1	AN3
	0	1	0	0	AN4
	0	1	0	1	AN5
	0	1	1	0	AN6
	0	1	1	1	AN7
	1	0	0	0	AN7
	1	0	0	1	AN7
	1	0	1	0	AN7
	1	0	1	1	AN7
	1	1	0	0	AN7
	1	1	0	1	AN7
	1	1	1	0	AN7
	1	1	1	1	AN7
1	0	0	0	0	Internal_6,
	0	0	0	1	Internal_7
	0	0	1	0	Internal_0
	0	0	1	1	Internal_1
	0	1	0	0	VRH
	0	1	0	1	VRL
	0	1	1	0	(VRH+VRL) / 2
	0	1	1	1	Reserved
	1	0	0	0	Internal_2
	1	0	0	1	Internal_3
	1	0	1	0	Internal_4
	1	0	1	1	Internal_5
	1	1	X	X	Reserved

11.3.2.7 ATD Status Register 0 (ATDSTAT0)

This register contains the Sequence Complete Flag, overrun flags for external trigger and FIFO mode, and the conversion counter.

Module Base + 0x0006

	7	6	5	4	3	2	1	0
R	SCF	0	ETORF	FIFOR	CC3	CC2	CC1	CC0
W								
Reset	0	0	0	0	0	0	0	0

= Unimplemented or Reserved

Figure 11-9. ATD Status Register 0 (ATDSTAT0)

Read: Anytime

Write: Anytime (No effect on (CC3, CC2, CC1, CC0))

Table 11-16. ATDSTAT0 Field Descriptions

Field	Description
7 SCF	**Sequence Complete Flag** — This flag is set upon completion of a conversion sequence. If conversion sequences are continuously performed (SCAN=1), the flag is set after each one is completed. This flag is cleared when one of the following occurs: A) Write “1” to SCF B) Write to ATDCTL5 (a new conversion sequence is started) C) If AFFC=1 and a result register is read 0 Conversion sequence not completed 1 Conversion sequence has completed
5 ETORF	**External Trigger Overrun Flag** — While in edge sensitive mode (ETRIGLE=0), if additional active edges are detected while a conversion sequence is in process the overrun flag is set. This flag is cleared when one of the following occurs: A) Write “1” to ETORF B) Write to ATDCTL0,1,2,3,4, ATDCMPE or ATDCMPHT (a conversion sequence is aborted) C) Write to ATDCTL5 (a new conversion sequence is started) 0 No External trigger overrun error has occurred 1 External trigger overrun error has occurred
4 FIFOR	**Result Register Overrun Flag** — This bit indicates that a result register has been written to before its associated conversion complete flag (CCF) has been cleared. This flag is most useful when using the FIFO mode because the flag potentially indicates that result registers are out of sync with the input channels. However, it is also practical for non-FIFO modes, and indicates that a result register has been overwritten before it has been read (i.e. the old data has been lost). This flag is cleared when one of the following occurs: A) Write “1” to FIFOR B) Write to ATDCTL0,1,2,3,4, ATDCMPE or ATDCMPHT (a conversion sequence is aborted) C) Write to ATDCTL5 (a new conversion sequence is started) 0 No overrun has occurred 1 Overrun condition exists (result register has been written while associated CCFx flag was still set)

Table 11-16. ATDSTAT0 Field Descriptions (continued)

Field	Description
3–0 CC[3:0]	**Conversion Counter** — These 4 read-only bits are the binary value of the conversion counter. The conversion counter points to the result register that will receive the result of the current conversion. E.g. CC3=0, CC2=1, CC1=1, CC0=0 indicates that the result of the current conversion will be in ATD Result Register 6. If in non-FIFO mode (FIFO=0) the conversion counter is initialized to zero at the beginning and end of the conversion sequence. If in FIFO mode (FIFO=1) the register counter is not initialized. The conversion counter wraps around when its maximum value is reached. Aborting a conversion or starting a new conversion clears the conversion counter even if FIFO=1.

11.3.2.8 ATD Compare Enable Register (ATDCMPE)

Writes to this register will abort current conversion sequence.

Read: Anytime

Write: Anytime

Module Base + 0x0008

	15	14	13	12	11	10	9	8	7	6	5	4	3	2	1	0
R	0	0	0	0	0	0	0	0	CMPE[7:0]							
W																
Reset	0	0	0	0	0	0	0	0	0	0	0	0	0	0	0	0

= Unimplemented or Reserved

Figure 11-10. ATD Compare Enable Register (ATDCMPE)

Table 11-17. ATDCMPE Field Descriptions

Field	Description
7–0 CMPE[7:0]	**Compare Enable for Conversion Number *n* (*n*= 7, 6, 5, 4, 3, 2, 1, 0) of a Sequence (*n conversion number, NOT channel number!)*** — These bits enable automatic compare of conversion results individually for conversions of a sequence. The sense of each comparison is determined by the CMPHT[*n*] bit in the ATDCMPHT register. For each conversion number with CMPE[*n*]=1 do the following: 1) Write compare value to ATDDR*n* result register 2) Write compare operator with CMPHT[*n*] in ATDCPMHT register CCF[*n*] in ATDSTAT2 register will flag individual success of any comparison. 0 No automatic compare 1 Automatic compare of results for conversion *n* of a sequence is enabled.

11.3.2.9 ATD Status Register 2 (ATDSTAT2)

This read-only register contains the Conversion Complete Flags CCF[7:0].

Module Base + 0x000A

	15	14	13	12	11	10	9	8	7	6	5	4	3	2	1	0
R	0	0	0	0	0	0	0	0	CCF[7:0]							
W																
Reset	0	0	0	0	0	0	0	0	0	0	0	0	0	0	0	0

= Unimplemented or Reserved

Figure 11-11. ATD Status Register 2 (ATDSTAT2)

Read: Anytime

Write: Anytime (for details see Table 11-18 below)

Table 11-18. ATDSTAT2 Field Descriptions

Field	Description
7–0 CCF[7:0]	**Conversion Complete Flag *n* (*n*= 7, 6, 5, 4, 3, 2, 1, 0) (*n conversion number, NOT channel number!)***— A conversion complete flag is set at the end of each conversion in a sequence. The flags are associated with the conversion position in a sequence (and also the result register number). Therefore in non-fifo mode, CCF[4] is set when the fifth conversion in a sequence is complete and the result is available in result register ATDDR4; CCF[5] is set when the sixth conversion in a sequence is complete and the result is available in ATDDR5, and so forth. If automatic compare of conversion results is enabled (CMPE[*n*]=1 in ATDCMPE), the conversion complete flag is only set if comparison with ATDDR*n* is true. If ACMPIE=1 a compare interrupt will be requested. In this case, as the ATDDR*n* result register is used to hold the compare value, the result will not be stored there at the end of the conversion but is lost. A flag CCF[*n*] is cleared when one of the following occurs: A) Write to ATDCTL5 (a new conversion sequence is started) B) If AFFC=0, write “1” to CCF[*n*] C) If AFFC=1 and CMPE[*n*]=0, read of result register ATDDR*n* D) If AFFC=1 and CMPE[*n*]=1, write to result register ATDDR*n* In case of a concurrent set and clear on CCF[*n*]: The clearing by method A) will overwrite the set. The clearing by methods B) or C) or D) will be overwritten by the set. 0 Conversion number *n* not completed or successfully compared 1 If (CMPE[*n*]=0): Conversion number *n* has completed. Result is ready in ATDDR*n*. If (CMPE[*n*]=1): Compare for conversion result number *n* with compare value in ATDDR*n*, using compare operator CMPGT[*n*] is true. (No result available in ATDDR*n*)

11.3.2.10 ATD Input Enable Register (ATDDIEN)

Module Base + 0x000C

	15	14	13	12	11	10	9	8	7	6	5	4	3	2	1	0
R	1	1	1	1	1	1	1	1	IEN[7:0]							
W																
Reset	1	1	1	1	1	1	1	1	0	0	0	0	0	0	0	0

= Unimplemented or Reserved

Figure 11-12. ATD Input Enable Register (ATDDIEN)

Read: Anytime

Write: Anytime

Table 11-19. ATDDIEN Field Descriptions

Field	Description
7–0 IEN[7:0]	**ATD Digital Input Enable on channel *x* (*x*= 7, 6, 5, 4, 3, 2, 1, 0)** — This bit controls the digital input buffer from the analog input pin (AN*x*) to the digital data register. 0 Disable digital input buffer to AN*x* pin 1 Enable digital input buffer on AN*x* pin. **Note:** Setting this bit will enable the corresponding digital input buffer continuously. If this bit is set while simultaneously using it as an analog port, there is potentially increased power consumption because the digital input buffer maybe in the linear region.

11.3.2.11 ATD Compare Higher Than Register (ATDCMPHT)

Writes to this register will abort current conversion sequence.

Read: Anytime

Write: Anytime

Module Base + 0x000E

	15	14	13	12	11	10	9	8	7	6	5	4	3	2	1	0
R	0	0	0	0	0	0	0	0	CMPHT[7:0]							
W																
Reset	0	0	0	0	0	0	0	0	0	0	0	0	0	0	0	0

= Unimplemented or Reserved

Figure 11-13. ATD Compare Higher Than Register (ATDCMPHT)

Table 11-20. ATDCMPHT Field Descriptions

Field	Description
7–0 CMPHT[7:0]	**Compare Operation Higher Than Enable for conversion number *n* (*n*= 7, 6, 5, 4, 3, 2, 1, 0) of a Sequence (*n conversion number, NOT channel number!)*** — This bit selects the operator for comparison of conversion results. 0 If result of conversion *n* is **lower or same than** compare value in ATDDR*n*, this is flagged in ATDSTAT2 1 If result of conversion *n* is **higher than** compare value in ATDDR*n*, this is flagged in ATDSTAT2

11.3.2.12 ATD Conversion Result Registers (ATDDR*n*)

The A/D conversion results are stored in 8 result registers. Results are always in unsigned data representation. Left and right justification is selected using the DJM control bit in ATDCTL3.

If automatic compare of conversions results is enabled (CMPE[*n*]=1 in ATDCMPE), these registers must be written with the compare values in left or right justified format depending on the actual value of the DJM bit. In this case, as the ATDDR*n* register is used to hold the compare value, the result will not be stored there at the end of the conversion but is lost.

Attention, n is the conversion number, NOT the channel number!

Read: Anytime

Write: Anytime

NOTE

For conversions not using automatic compare, results are stored in the result registers after each conversion. In this case avoid writing to ATDDRn except for initial values, because an A/D result might be overwritten.

11.3.2.12.1 Left Justified Result Data (DJM=0)

Module Base +
0x0010 = ATDDR0, 0x0012 = ATDDR1, 0x0014 = ATDDR2, 0x0016 = ATDDR3
0x0018 = ATDDR4, 0x001A = ATDDR5, 0x001C = ATDDR6, 0x001E = ATDDR7

	15	14	13	12	11	10	9	8	7	6	5	4	3	2	1	0
R	Result-Bit[11:0]												0	0	0	0
W																
Reset	0	0	0	0	0	0	0	0	0	0	0	0	0	0	0	0

= Unimplemented or Reserved

Figure 11-14. Left justified ATD conversion result register (ATDDR*n*)

Table 11-21 shows how depending on the A/D resolution the conversion result is transferred to the ATD result registers for left justified data. Compare is always done using all 12 bits of both the conversion result and the compare value in ATDDRn.

Table 11-21. Conversion result mapping to ATDDRn

A/D resolution	DJM	conversion result mapping to ATDDR*n*
8-bit data	0	Result-Bit[11:4] = conversion result, Result-Bit[3:0]=0000
10-bit data	0	Result-Bit[11:2] = conversion result, Result-Bit[1:0]=00

11.3.2.12.2 Right Justified Result Data (DJM=1)

Module Base +
0x0010 = ATDDR0, 0x0012 = ATDDR1, 0x0014 = ATDDR2, 0x0016 = ATDDR3
0x0018 = ATDDR4, 0x001A = ATDDR5, 0x001C = ATDDR6, 0x001E = ATDDR7

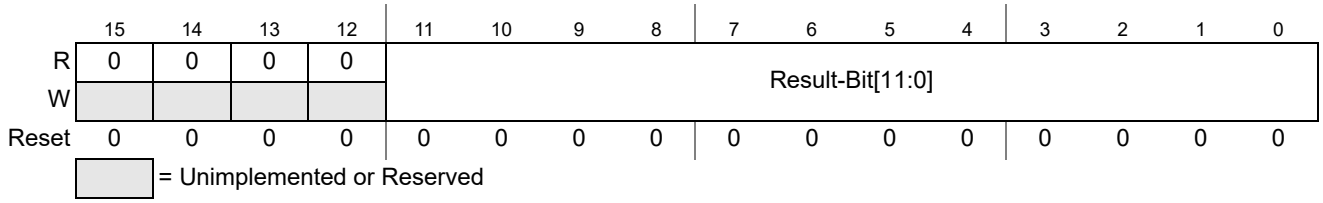

Figure 11-15. Right justified ATD conversion result register (ATDDR*n*)

Table 11-22 shows how depending on the A/D resolution the conversion result is transferred to the ATD result registers for right justified data. Compare is always done using all 12 bits of both the conversion result and the compare value in ATDDRn.

Table 11-22. Conversion result mapping to ATDDRn

A/D resolution	DJM	conversion result mapping to ATDDR*n*
8-bit data	1	Result-Bit[7:0] = result, Result-Bit[11:8]=0000
10-bit data	1	Result-Bit[9:0] = result, Result-Bit[11:10]=00

11.4 Functional Description

The ADC10B8C consists of an analog sub-block and a digital sub-block.

11.4.1 Analog Sub-Block

The analog sub-block contains all analog electronics required to perform a single conversion. Separate power supplies VDDA and VSSA allow to isolate noise of other MCU circuitry from the analog sub-block.

11.4.1.1 Sample and Hold Machine

The Sample and Hold Machine controls the storage and charge of the sample capacitor to the voltage level of the analog signal at the selected ADC input channel.

During the sample process the analog input connects directly to the storage node.

The input analog signals are unipolar and must be within the potential range of VSSA to VDDA.

During the hold process the analog input is disconnected from the storage node.

11.4.1.2 Analog Input Multiplexer

The analog input multiplexer connects one of the 8 external analog input channels to the sample and hold machine.

11.4.1.3 Analog-to-Digital (A/D) Machine

The A/D Machine performs analog to digital conversions. The resolution is program selectable to be either 8 or 10 bits. The A/D machine uses a successive approximation architecture. It functions by comparing the sampled and stored analog voltage with a series of binary coded discrete voltages.

By following a binary search algorithm, the A/D machine identifies the discrete voltage that is nearest to the sampled and stored voltage.

When not converting the A/D machine is automatically powered down.

Only analog input signals within the potential range of VRL to VRH (A/D reference potentials) will result in a non-railed digital output code.

11.4.2 Digital Sub-Block

This subsection describes some of the digital features in more detail. See Section 11.3.2, “Register Descriptions” for all details.

11.4.2.1 External Trigger Input

The external trigger feature allows the user to synchronize ATD conversions to an external event rather than relying only on software to trigger the ATD module when a conversion is about to take place. The external trigger signal (out of reset ATD channel 7, configurable in ATDCTL1) is programmable to be edge

or level sensitive with polarity control. Table 11-23 gives a brief description of the different combinations of control bits and their effect on the external trigger function

In order to avoid maybe false trigger events please enable the external digital input via ATDDIEN register first and in the following enable the external trigger mode by bit ETRIGE..

Table 11-23. External Trigger Control Bits

ETRIGLE	ETRIGP	ETRIGE	SCAN	Description
X	X	0	0	Ignores external trigger. Performs one conversion sequence and stops.
X	X	0	1	Ignores external trigger. Performs continuous conversion sequences.
0	0	1	X	Trigger falling edge sensitive. Performs one conversion sequence per trigger.
0	1	1	X	Trigger rising edge sensitive. Performs one conversion sequence per trigger.
1	0	1	X	Trigger low level sensitive. Performs continuous conversions while trigger level is active.
1	1	1	X	Trigger high level sensitive. Performs continuous conversions while trigger level is active.

In either level or edge sensitive mode, the first conversion begins when the trigger is received.

Once ETRIGE is enabled a conversion must be triggered externally after writing the ATDCTL5 register.

During a conversion in edge sensitive mode, if additional trigger events are detected the overrun error flag ETORF is set.

If level sensitive mode is active and the external trigger de-asserts and later asserts again during a conversion sequence, this does not constitute an overrun. Therefore, the flag is not set. If the trigger is left active in level sensitive mode when a sequence is about to complete, another sequence will be triggered immediately.

11.4.2.2 General-Purpose Digital Port Operation

Each ATD input pin can be switched between analog or digital input functionality. An analog multiplexer makes each ATD input pin selected as analog input available to the A/D converter.

The pad of the ATD input pin is always connected to the analog input channel of the analog mulitplexer.

Each pad input signal is buffered to the digital port register.

This buffer can be turned on or off with the ATDDIEN register for each ATD input pin.
This is important so that the buffer does not draw excess current when an ATD input pin is selected as analog input to the ADC10B8C.

11.5 Resets

At reset the ADC10B8C is in a power down state. The reset state of each individual bit is listed within the Register Description section (see Section 11.3.2, “Register Descriptions”) which details the registers and their bit-field.

11.6 Interrupts

The interrupts requested by the ADC10B8C are listed in Table 11-24. Refer to MCU specification for related vector address and priority.

Table 11-24. ATD Interrupt Vectors

Interrupt Source	CCR Mask	Local Enable
Sequence Complete Interrupt	I bit	ASCIE in ATDCTL2
Compare Interrupt	I bit	ACMPIE in ATDCTL2

See Section 11.3.2, “Register Descriptions” for further details.

Chapter 12
Analog-to-Digital Converter (ADC12B8CV2)

Revision History

Version Number	Revision Date	Effective Date	Author	Description of Changes
V02.00	13 May 2009	13 May 2009		Initial version copied from V01.05, changed unused Bits in ATDDIEN to read logic 1
V02.01	17 Dec 2009	17 Dec 2009		Updated Table 12-15 Analog Input Channel Select Coding - description of internal channels. Updated register ATDDR (left/right justified result) description in section 12.3.2.12.1/12-449 and 12.3.2.12.2/12-450 and added Table 12-21 to improve feature description.
V02.02	09 Feb 2010	09 Feb 2010		Fixed typo in Table 12-9 - conversion result for 3mV and 10bit resolution
V02.03	26 Feb 2010	26 Feb 2010		Corrected Table 12-15 Analog Input Channel Select Coding - description of internal channels.
V02.04	14 Apr 2010	14 Apr 2010		Corrected typos to be in-line with SoC level pin naming conventions for VDDA, VSSA, VRL and VRH.
V02.05	25 Aug 2010	25 Aug 2010		Removed feature of conversion during STOP and general wording clean up done in Section 12.4, “Functional Description
V02.06	09 Sep 2010	09 Sep 2010		Update of internal only information.
V02.07	11 Feb 2011	11 Feb 2011		Connectivity Information regarding internal channel_6 added to Table 12-15.
V02.08	22. Jun 2012	22. Jun 2012		Updated register wirte access information in section 12.3.2.9/12-447
V02.09	29. Jun 2012	29 Jun 2012		Removed IP name in block diagram Figure 12-1
V02.10	02 Oct 2012	02 Oct 2012		Added user information to avoid maybe false external trigger events when enabling the external trigger mode (Section 12.4.2.1, “External Trigger Input).

12.1 Introduction

The ADC12B8C is a 8-channel, 12-bit, multiplexed input successive approximation analog-to-digital converter. Refer to device electrical specifications for ATD accuracy.

12.1.1 Features

- 8-, 10-, or 12-bit resolution.
- Automatic return to low power after conversion sequence
- Automatic compare with interrupt for higher than or less/equal than programmable value
- Programmable sample time.
- Left/right justified result data.
- External trigger control.
- Sequence complete interrupt.
- Analog input multiplexer for 8 analog input channels.
- Special conversions for VRH, VRL, (VRL+VRH)/2.
- 1-to-8 conversion sequence lengths.
- Continuous conversion mode.
- Multiple channel scans.
- Configurable external trigger functionality on any AD channel or any of four additional trigger inputs. The four additional trigger inputs can be chip external or internal. Refer to device specification for availability and connectivity.
- Configurable location for channel wrap around (when converting multiple channels in a sequence).

12.1.2 Modes of Operation

12.1.2.1 Conversion Modes

There is software programmable selection between performing **single** or **continuous conversion** on a **single channel** or **multiple channels**.

12.1.2.2 MCU Operating Modes

- **Stop Mode**
  Entering Stop Mode aborts any conversion sequence in progress and if a sequence was aborted restarts it after exiting stop mode. This has the same effect/consequences as starting a conversion sequence with write to ATDCTL5. So after exiting from stop mode with a previously aborted sequence all flags are cleared etc.
- **Wait Mode**
  ADC12B8C behaves same in Run and Wait Mode. For reduced power consumption continuous conversions should be aborted before entering Wait mode.
- **Freeze Mode**
  In Freeze Mode the ADC12B8C will either continue or finish or stop converting according to the FRZ1 and FRZ0 bits. This is useful for debugging and emulation.

12.1.3 Block Diagram

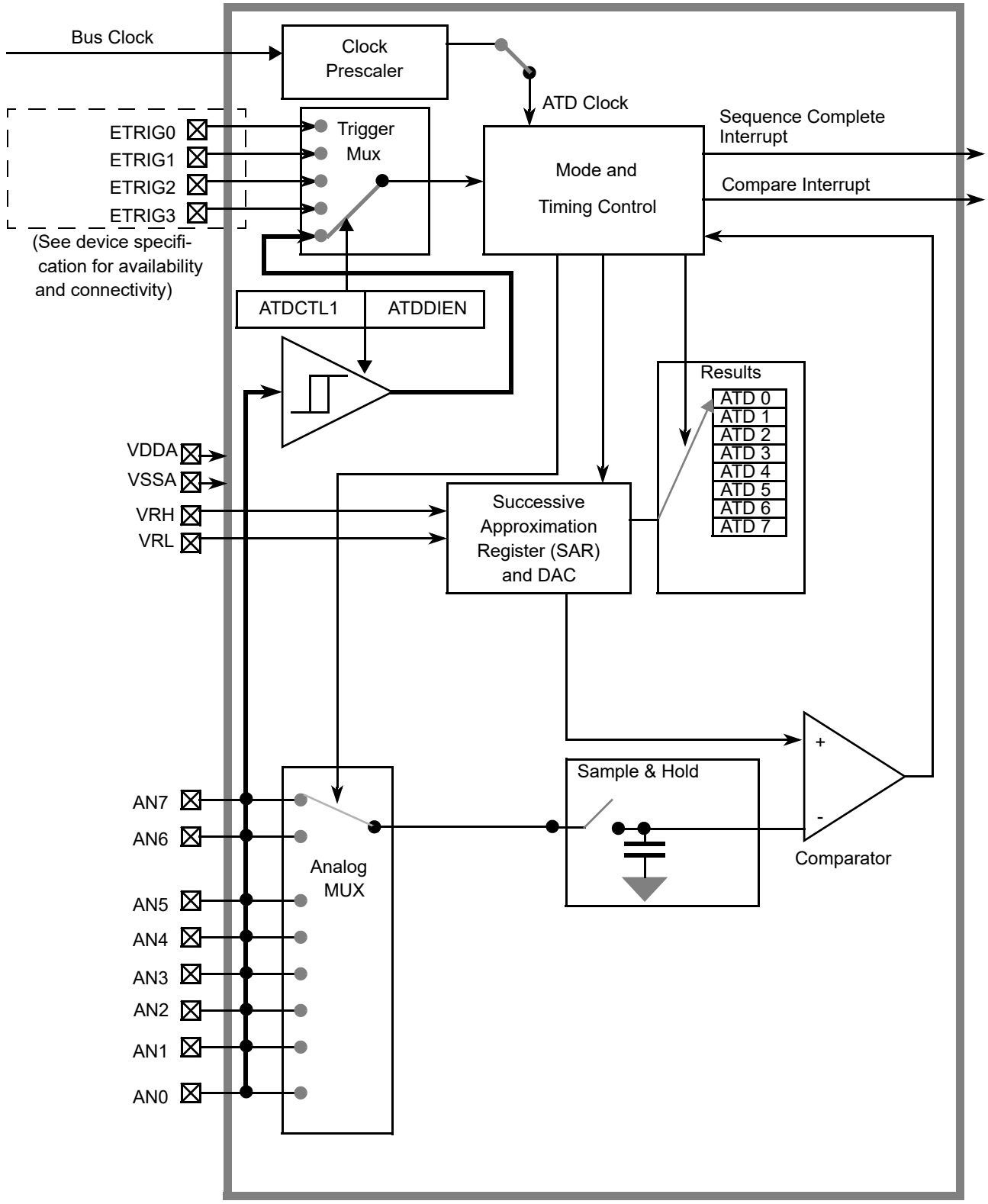

Figure 12-1. ADC12B8C Block Diagram

12.2 Signal Description

This section lists all inputs to the ADC12B8C block.

12.2.1 Detailed Signal Descriptions

12.2.1.1 AN*x* (*x* = 7, 6, 5, 4, 3, 2, 1, 0)

This pin serves as the analog input Channel *x*. It can also be configured as digital port or external trigger for the ATD conversion.

12.2.1.2 ETRIG3, ETRIG2, ETRIG1, ETRIG0

These inputs can be configured to serve as an external trigger for the ATD conversion.

Refer to device specification for availability and connectivity of these inputs!

12.2.1.3 VRH, VRL

VRH is the high reference voltage, VRL is the low reference voltage for ATD conversion.

12.2.1.4 VDDA, VSSA

These pins are the power supplies for the analog circuitry of the ADC12B8C block.

12.3 Memory Map and Register Definition

This section provides a detailed description of all registers accessible in the ADC12B8C.

12.3.1 Module Memory Map

Figure 12-2 gives an overview on all ADC12B8C registers.

NOTE

Register Address = Base Address + Address Offset, where the Base Address is defined at the MCU level and the Address Offset is defined at the module level.

Address	Name		Bit 7	6	5	4	3	2	1	Bit 0
0x0000	ATDCTL0	R W	Reserved	0	0	0	WRAP3	WRAP2	WRAP1	WRAP0
0x0001	ATDCTL1	R W	ETRIGSEL	SRES1	SRES0	SMP_DIS	ETRIGCH3	ETRIGCH2	ETRIGCH1	ETRIGCH0
0x0002	ATDCTL2	R W	0	AFFC	Reserved	ETRIGLE	ETRIGP	ETRIGE	ASCIE	ACMPIE

= Unimplemented or Reserved

Figure 12-2. ADC12B8C Register Summary (Sheet 1 of 2)

Address	Name		Bit 7	6	5	4	3	2	1	Bit 0
0x0003	ATDCTL3	R	DJM	S8C	S4C	S2C	S1C	FIFO	FRZ1	FRZ0
		W								
0x0004	ATDCTL4	R	SMP2	SMP1	SMP0	PRS[4:0]				
		W								
0x0005	ATDCTL5	R	0	SC	SCAN	MULT	CD	CC	CB	CA
		W								
0x0006	ATDSTAT0	R	SCF	0	ETORF	FIFOR	CC3	CC2	CC1	CC0
		W								
0x0007	Unimple-mented	R	0	0	0	0	0	0	0	0
		W								
0x0008	ATDCMPEH	R	0	0	0	0	0	0	0	0
		W								
0x0009	ATDCMPEL	R	CMPE[7:0]							
		W								
0x000A	ATDSTAT2H	R	0	0	0	0	0	0	0	0
		W								
0x000B	ATDSTAT2L	R	CCF[7:0]							
		W								
0x000C	ATDDIENH	R	1	1	1	1	1	1	1	1
		W								
0x000D	ATDDIENL	R	IEN[7:0]							
		W								
0x000E	ATDCMPHTH	R	0	0	0	0	0	0	0	0
		W								
0x000F	ATDCMPHTL	R	CMPHT[7:0]							
		W								
0x0010	ATDDR0	R	See Section 12.3.2.12.1, “Left Justified Result Data (DJM=0)” and Section 12.3.2.12.2, “Right Justified Result Data (DJM=1)”							
		W								
0x0012	ATDDR1	R	See Section 12.3.2.12.1, “Left Justified Result Data (DJM=0)” and Section 12.3.2.12.2, “Right Justified Result Data (DJM=1)”							
		W								
0x0014	ATDDR2	R	See Section 12.3.2.12.1, “Left Justified Result Data (DJM=0)” and Section 12.3.2.12.2, “Right Justified Result Data (DJM=1)”							
		W								
0x0016	ATDDR3	R	See Section 12.3.2.12.1, “Left Justified Result Data (DJM=0)” and Section 12.3.2.12.2, “Right Justified Result Data (DJM=1)”							
		W								
0x0018	ATDDR4	R	See Section 12.3.2.12.1, “Left Justified Result Data (DJM=0)” and Section 12.3.2.12.2, “Right Justified Result Data (DJM=1)”							
		W								
0x001A	ATDDR5	R	See Section 12.3.2.12.1, “Left Justified Result Data (DJM=0)” and Section 12.3.2.12.2, “Right Justified Result Data (DJM=1)”							
		W								
0x001C	ATDDR6	R	See Section 12.3.2.12.1, “Left Justified Result Data (DJM=0)” and Section 12.3.2.12.2, “Right Justified Result Data (DJM=1)”							
		W								
0x001E	ATDDR7	R	See Section 12.3.2.12.1, “Left Justified Result Data (DJM=0)” and Section 12.3.2.12.2, “Right Justified Result Data (DJM=1)”							
		W								
0x0020 - 0x002F	Unimple-mented	R	0	0	0	0	0	0	0	0
		W								

= Unimplemented or Reserved

Figure 12-2. ADC12B8C Register Summary (Sheet 2 of 2)

12.3.2 Register Descriptions

This section describes in address order all the ADC12B8C registers and their individual bits.

12.3.2.1 ATD Control Register 0 (ATDCTL0)

Writes to this register will abort current conversion sequence.

Module Base + 0x0000

	7	6	5	4	3	2	1	0
R	Reserved	0	0	0	WRAP3	WRAP2	WRAP1	WRAP0
W								
Reset	0	0	0	0	1	1	1	1

= Unimplemented or Reserved

Figure 12-3. ATD Control Register 0 (ATDCTL0)

Read: Anytime

Write: Anytime, in special modes always write 0 to Reserved Bit 7.

Table 12-1. ATDCTL0 Field Descriptions

Field	Description
3-0 WRAP[3-0]	**Wrap Around Channel Select Bits** — These bits determine the channel for wrap around when doing multi-channel conversions. The coding is summarized in Table 12-2.

Table 12-2. Multi-Channel Wrap Around Coding

WRAP3	WRAP2	WRAP1	WRAP0	Multiple Channel Conversions (MULT = 1) Wraparound to AN0 after Converting
0	0	0	0	Reserved[1]
0	0	0	1	AN1
0	0	1	0	AN2
0	0	1	1	AN3
0	1	0	0	AN4
0	1	0	1	AN5
0	1	1	0	AN6
0	1	1	1	AN7
1	0	0	0	AN7
1	0	0	1	AN7
1	0	1	0	AN7
1	0	1	1	AN7
1	1	0	0	AN7
1	1	0	1	AN7
1	1	1	0	AN7
1	1	1	1	AN7

[1]If only AN0 should be converted use MULT=0.

12.3.2.2 ATD Control Register 1 (ATDCTL1)

Writes to this register will abort current conversion sequence.

Module Base + 0x0001

	7	6	5	4	3	2	1	0
R W	ETRIGSEL	SRES1	SRES0	SMP_DIS	ETRIGCH3	ETRIGCH2	ETRIGCH1	ETRIGCH0
Reset	0	0	1	0	1	1	1	1

Figure 12-4. ATD Control Register 1 (ATDCTL1)

Read: Anytime

Write: Anytime

Table 12-3. ATDCTL1 Field Descriptions

Field	Description
7 ETRIGSEL	**External Trigger Source Select** — This bit selects the external trigger source to be either one of the AD channels or one of the ETRIG3-0 inputs. See device specification for availability and connectivity of ETRIG3-0 inputs. If a particular ETRIG3-0 input option is not available, writing a 1 to ETRISEL only sets the bit but has no effect, this means that one of the AD channels (selected by ETRIGCH3-0) is configured as the source for external trigger. The coding is summarized in Table 12-5.
6–5 SRES[1:0]	**A/D Resolution Select** — These bits select the resolution of A/D conversion results. See Table 12-4 for coding.
4 SMP_DIS	**Discharge Before Sampling Bit** 0 No discharge before sampling. 1 The internal sample capacitor is discharged before sampling the channel. This adds 2 ATD clock cycles to the sampling time. This can help to detect an open circuit instead of measuring the previous sampled channel.
3–0 ETRIGCH[3:0]	**External Trigger Channel Select** — These bits select one of the AD channels or one of the ETRIG3-0 inputs as source for the external trigger. The coding is summarized in Table 12-5.

Table 12-4. A/D Resolution Coding

SRES1	SRES0	A/D Resolution
0	0	8-bit data
0	1	10-bit data
1	0	12-bit data
1	1	Reserved

Table 12-5. External Trigger Channel Select Coding

ETRIGSEL	ETRIGCH3	ETRIGCH2	ETRIGCH1	ETRIGCH0	External trigger source is
0	0	0	0	0	AN0
0	0	0	0	1	AN1
0	0	0	1	0	AN2
0	0	0	1	1	AN3
0	0	1	0	0	AN4
0	0	1	0	1	AN5
0	0	1	1	0	AN6
0	0	1	1	1	AN7
0	1	0	0	0	AN7
0	1	0	0	1	AN7
0	1	0	1	0	AN7
0	1	0	1	1	AN7
0	1	1	0	0	AN7
0	1	1	0	1	AN7
0	1	1	1	0	AN7
0	1	1	1	1	AN7
1	0	0	0	0	ETRIG0[1]
1	0	0	0	1	ETRIG1[1]
1	0	0	1	0	ETRIG2[1]
1	0	0	1	1	ETRIG3[1]
1	0	1	X	X	Reserved
1	1	X	X	X	Reserved

[1] Only if ETRIG3-0 input option is available (see device specification), else ETRISEL is ignored, that means external trigger source is still on one of the AD channels selected by ETRIGCH3-0

12.3.2.3 ATD Control Register 2 (ATDCTL2)

Writes to this register will abort current conversion sequence.

Module Base + 0x0002

	7	6	5	4	3	2	1	0
R	0	AFFC	Reserved	ETRIGLE	ETRIGP	ETRIGE	ASCIE	ACMPIE
W								
Reset	0	0	0	0	0	0	0	0

= Unimplemented or Reserved

Figure 12-5. ATD Control Register 2 (ATDCTL2)

Read: Anytime

Write: Anytime

Table 12-6. ATDCTL2 Field Descriptions

Field	Description
6 AFFC	**ATD Fast Flag Clear All** 0 ATD flag clearing done by write 1 to respective CCF[*n*] flag. 1 Changes all ATD conversion complete flags to a fast clear sequence. For compare disabled (CMPE[*n*]=0) a read access to the result register will cause the associated CCF[*n*] flag to clear automatically. For compare enabled (CMPE[*n*]=1) a write access to the result register will cause the associated CCF[*n*] flag to clear automatically.
5 Reserved	Do not alter this bit from its reset value.It is for Manufacturer use only and can change the ATD behavior.
4 ETRIGLE	**External Trigger Level/Edge Control** — This bit controls the sensitivity of the external trigger signal. See Table 12-7 for details.
3 ETRIGP	**External Trigger Polarity** — This bit controls the polarity of the external trigger signal. See Table 12-7 for details.
2 ETRIGE	**External Trigger Mode Enable** — This bit enables the external trigger on one of the AD channels or one of the ETRIG3-0 inputs as described in Table 12-5. If the external trigger source is one of the AD channels, the digital input buffer of this channel is enabled. The external trigger allows to synchronize the start of conversion with external events. 0 Disable external trigger 1 Enable external trigger
1 ASCIE	**ATD Sequence Complete Interrupt Enable** 0 ATD Sequence Complete interrupt requests are disabled. 1 ATD Sequence Complete interrupt will be requested whenever SCF=1 is set.
0 ACMPIE	**ATD Compare Interrupt Enable** — If automatic compare is enabled for conversion *n* (CMPE[*n*]=1 in ATDCMPE register) this bit enables the compare interrupt. If the CCF[*n*] flag is set (showing a successful compare for conversion *n*), the compare interrupt is triggered. 0 ATD Compare interrupt requests are disabled. 1 For the conversions in a sequence for which automatic compare is enabled (CMPE[*n*]=1), an ATD Compare Interrupt will be requested whenever any of the respective CCF flags is set.

Table 12-7. External Trigger Configurations

ETRIGLE	ETRIGP	External Trigger Sensitivity
0	0	Falling edge
0	1	Rising edge
1	0	Low level
1	1	High level

12.3.2.4 ATD Control Register 3 (ATDCTL3)

Writes to this register will abort current conversion sequence.

Module Base + 0x0003

	7	6	5	4	3	2	1	0
R W	DJM	S8C	S4C	S2C	S1C	FIFO	FRZ1	FRZ0
Reset	0	0	1	0	0	0	0	0

= Unimplemented or Reserved

Figure 12-6. ATD Control Register 3 (ATDCTL3)

Read: Anytime

Write: Anytime

Table 12-8. ATDCTL3 Field Descriptions

Field	Description
7 DJM	**Result Register Data Justification** — Result data format is always unsigned. This bit controls justification of conversion data in the result registers. 0 Left justified data in the result registers. 1 Right justified data in the result registers. Table 12-9 gives example ATD results for an input signal range between 0 and 5.12 Volts.
6–3 S8C, S4C, S2C, S1C	**Conversion Sequence Length** — These bits control the number of conversions per sequence. Table 12-10 shows all combinations. At reset, S4C is set to 1 (sequence length is 4). This is to maintain software continuity to HC12 family.
2 FIFO	**Result Register FIFO Mode** — If this bit is zero (non-FIFO mode), the A/D conversion results map into the result registers based on the conversion sequence; the result of the first conversion appears in the first result register (ATDDR0), the second result in the second result register (ATDDR1), and so on. If this bit is one (FIFO mode) the conversion counter is not reset at the beginning or end of a conversion sequence; sequential conversion results are placed in consecutive result registers. In a continuously scanning conversion sequence, the result register counter will wrap around when it reaches the end of the result register file. The conversion counter value (CC3-0 in ATDSTAT0) can be used to determine where in the result register file, the current conversion result will be placed. Aborting a conversion or starting a new conversion clears the conversion counter even if FIFO=1. So the first result of a new conversion sequence, started by writing to ATDCTL5, will always be place in the first result register (ATDDDR0). Intended usage of FIFO mode is continuos conversion (SCAN=1) or triggered conversion (ETRIG=1). Which result registers hold valid data can be tracked using the conversion complete flags. Fast flag clear mode may be useful in a particular application to track valid data. If this bit is one, automatic compare of result registers is always disabled, that is ADC12B8C will behave as if ACMPIE and all CPME[*n*] were zero. 0 Conversion results are placed in the corresponding result register up to the selected sequence length. 1 Conversion results are placed in consecutive result registers (wrap around at end).
1–0 FRZ[1:0]	**Background Debug Freeze Enable** — When debugging an application, it is useful in many cases to have the ATD pause when a breakpoint (Freeze Mode) is encountered. These 2 bits determine how the ATD will respond to a breakpoint as shown in Table 12-11. Leakage onto the storage node and comparator reference capacitors may compromise the accuracy of an immediately frozen conversion depending on the length of the freeze period.

Table 12-9. Examples of ideal decimal ATD Results

Input Signal VRL = 0 Volts VRH = 5.12 Volts	8-Bit Codes (resolution=20mV)	10-Bit Codes (resolution=5mV)	12-Bit Codes (transfer curve has 1.25mV offset) (resolution=1.25mV)
5.120 Volts	255	1023	4095
...	...	...	...
0.022	1	4	17
0.020	1	4	16
0.018	1	4	14
0.016	1	3	12
0.014	1	3	11
0.012	1	2	9
0.010	1	2	8
0.008	0	2	6
0.006	0	1	4
0.004	0	1	3
0.003	0	1	2
0.002	0	0	1
0.000	0	0	0

Table 12-10. Conversion Sequence Length Coding

S8C	S4C	S2C	S1C	Number of Conversions per Sequence
0	0	0	0	8
0	0	0	1	1
0	0	1	0	2
0	0	1	1	3
0	1	0	0	4
0	1	0	1	5
0	1	1	0	6
0	1	1	1	7
1	0	0	0	8
1	0	0	1	8
1	0	1	0	8
1	0	1	1	8
1	1	0	0	8
1	1	0	1	8
1	1	1	0	8
1	1	1	1	8

Table 12-11. ATD Behavior in Freeze Mode (Breakpoint)

FRZ1	FRZ0	Behavior in Freeze Mode
0	0	Continue conversion
0	1	Reserved
1	0	Finish current conversion, then freeze
1	1	Freeze Immediately

12.3.2.5 ATD Control Register 4 (ATDCTL4)

Writes to this register will abort current conversion sequence.

Module Base + 0x0004

	7	6	5	4	3	2	1	0
R W	SMP2	SMP1	SMP0	PRS[4:0]				
Reset	0	0	0	0	0	1	0	1

Figure 12-7. ATD Control Register 4 (ATDCTL4)

Read: Anytime

Write: Anytime

Table 12-12. ATDCTL4 Field Descriptions

Field	Description
7–5 SMP[2:0]	**Sample Time Select** — These three bits select the length of the sample time in units of ATD conversion clock cycles. Note that the ATD conversion clock period is itself a function of the prescaler value (bits PRS4-0). Table 12-13 lists the available sample time lengths.
4–0 PRS[4:0]	**ATD Clock Prescaler** — These 5 bits are the binary prescaler value PRS. The ATD conversion clock frequency is calculated as follows: $f_{ATDCLK} = \frac{f_{BUS}}{2 \times (PRS + 1)}$ Refer to Device Specification for allowed frequency range of f_{ATDCLK}.

Table 12-13. Sample Time Select

SMP2	SMP1	SMP0	Sample Time in Number of ATD Clock Cycles
0	0	0	4
0	0	1	6
0	1	0	8
0	1	1	10
1	0	0	12
1	0	1	16
1	1	0	20

Table 12-13. Sample Time Select

SMP2	SMP1	SMP0	Sample Time in Number of ATD Clock Cycles
1	1	1	24

12.3.2.6 ATD Control Register 5 (ATDCTL5)

Writes to this register will abort current conversion sequence and start a new conversion sequence. If the external trigger function is enabled (ETRIGE=1) an initial write to ATDCTL5 is required to allow starting of a conversion sequence which will then occur on each trigger event. Start of conversion means the beginning of the sampling phase.

Module Base + 0x0005

	7	6	5	4	3	2	1	0
R	0	SC	SCAN	MULT	CD	CC	CB	CA
W								
Reset	0	0	0	0	0	0	0	0

= Unimplemented or Reserved

Figure 12-8. ATD Control Register 5 (ATDCTL5)

Read: Anytime

Write: Anytime

Table 12-14. ATDCTL5 Field Descriptions

Field	Description
6 SC	**Special Channel Conversion Bit** — If this bit is set, then special channel conversion can be selected using CD, CC, CB and CA of ATDCTL5. Table 12-15 lists the coding. 0 Special channel conversions disabled 1 Special channel conversions enabled
5 SCAN	**Continuous Conversion Sequence Mode** — This bit selects whether conversion sequences are performed continuously or only once. If the external trigger function is enabled (ETRIGE=1) setting this bit has no effect, thus the external trigger always starts a single conversion sequence. 0 Single conversion sequence 1 Continuous conversion sequences (scan mode)

Table 12-14. ATDCTL5 Field Descriptions (continued)

Field	Description
4 MULT	**Multi-Channel Sample Mode** — When MULT is 0, the ATD sequence controller samples only from the specified analog input channel for an entire conversion sequence. The analog channel is selected by channel selection code (control bits CD/CC/CB/CA located in ATDCTL5). When MULT is 1, the ATD sequence controller samples across channels. The number of channels sampled is determined by the sequence length value (S8C, S4C, S2C, S1C). The first analog channel examined is determined by channel selection code (CD, CC, CB, CA control bits); subsequent channels sampled in the sequence are determined by incrementing the channel selection code or wrapping around to AN0 (channel 0). 0 Sample only one channel 1 Sample across several channels
3–0 CD, CC, CB, CA	**Analog Input Channel Select Code** — These bits select the analog input channel(s). Table 12-15 lists the coding used to select the various analog input channels. In the case of single channel conversions (MULT=0), this selection code specifies the channel to be examined. In the case of multiple channel conversions (MULT=1), this selection code specifies the first channel to be examined in the conversion sequence. Subsequent channels are determined by incrementing the channel selection code or wrapping around to AN0 (after converting the channel defined by the Wrap Around Channel Select Bits WRAP3-0 in ATDCTL0). When starting with a channel number higher than the one defined by WRAP3-0 the first wrap around will be AN7 to AN0.

Table 12-15. Analog Input Channel Select Coding

SC	CD	CC	CB	CA	Analog Input Channel
0	0	0	0	0	AN0
	0	0	0	1	AN1
	0	0	1	0	AN2
	0	0	1	1	AN3
	0	1	0	0	AN4
	0	1	0	1	AN5
	0	1	1	0	AN6
	0	1	1	1	AN7
	1	0	0	0	AN7
	1	0	0	1	AN7
	1	0	1	0	AN7
	1	0	1	1	AN7
	1	1	0	0	AN7
	1	1	0	1	AN7
	1	1	1	0	AN7
	1	1	1	1	AN7

Table 12-15. Analog Input Channel Select Coding

SC	CD	CC	CB	CA	Analog Input Channel
1	0	0	0	0	Internal_6,
	0	0	0	1	Internal_7
	0	0	1	0	Internal_0
	0	0	1	1	Internal_1
	0	1	0	0	VRH
	0	1	0	1	VRL
	0	1	1	0	(VRH+VRL) / 2
	0	1	1	1	Reserved
	1	0	0	0	Internal_2
	1	0	0	1	Internal_3
	1	0	1	0	Internal_4
	1	0	1	1	Internal_5
	1	1	X	X	Reserved

12.3.2.7 ATD Status Register 0 (ATDSTAT0)

This register contains the Sequence Complete Flag, overrun flags for external trigger and FIFO mode, and the conversion counter.

Module Base + 0x0006

	7	6	5	4	3	2	1	0
R	SCF	0	ETORF	FIFOR	CC3	CC2	CC1	CC0
W								
Reset	0	0	0	0	0	0	0	0

= Unimplemented or Reserved

Figure 12-9. ATD Status Register 0 (ATDSTAT0)

Read: Anytime

Write: Anytime (No effect on (CC3, CC2, CC1, CC0))

Table 12-16. ATDSTAT0 Field Descriptions

Field	Description
7 SCF	**Sequence Complete Flag** — This flag is set upon completion of a conversion sequence. If conversion sequences are continuously performed (SCAN=1), the flag is set after each one is completed. This flag is cleared when one of the following occurs: A) Write “1” to SCF B) Write to ATDCTL5 (a new conversion sequence is started) C) If AFFC=1 and a result register is read 0 Conversion sequence not completed 1 Conversion sequence has completed
5 ETORF	**External Trigger Overrun Flag** — While in edge sensitive mode (ETRIGLE=0), if additional active edges are detected while a conversion sequence is in process the overrun flag is set. This flag is cleared when one of the following occurs: A) Write “1” to ETORF B) Write to ATDCTL0,1,2,3,4, ATDCMPE or ATDCMPHT (a conversion sequence is aborted) C) Write to ATDCTL5 (a new conversion sequence is started) 0 No External trigger overrun error has occurred 1 External trigger overrun error has occurred
4 FIFOR	**Result Register Overrun Flag** — This bit indicates that a result register has been written to before its associated conversion complete flag (CCF) has been cleared. This flag is most useful when using the FIFO mode because the flag potentially indicates that result registers are out of sync with the input channels. However, it is also practical for non-FIFO modes, and indicates that a result register has been overwritten before it has been read (i.e. the old data has been lost). This flag is cleared when one of the following occurs: A) Write “1” to FIFOR B) Write to ATDCTL0,1,2,3,4, ATDCMPE or ATDCMPHT (a conversion sequence is aborted) C) Write to ATDCTL5 (a new conversion sequence is started) 0 No overrun has occurred 1 Overrun condition exists (result register has been written while associated CCFx flag was still set)

Table 12-16. ATDSTAT0 Field Descriptions (continued)

Field	Description
3–0 CC[3:0]	**Conversion Counter** — These 4 read-only bits are the binary value of the conversion counter. The conversion counter points to the result register that will receive the result of the current conversion. E.g. CC3=0, CC2=1, CC1=1, CC0=0 indicates that the result of the current conversion will be in ATD Result Register 6. If in non-FIFO mode (FIFO=0) the conversion counter is initialized to zero at the beginning and end of the conversion sequence. If in FIFO mode (FIFO=1) the register counter is not initialized. The conversion counter wraps around when its maximum value is reached. Aborting a conversion or starting a new conversion clears the conversion counter even if FIFO=1.

12.3.2.8 ATD Compare Enable Register (ATDCMPE)

Writes to this register will abort current conversion sequence.

Read: Anytime

Write: Anytime

Module Base + 0x0008

	15	14	13	12	11	10	9	8	7	6	5	4	3	2	1	0
R	0	0	0	0	0	0	0	0	CMPE[7:0]							
W																
Reset	0	0	0	0	0	0	0	0	0	0	0	0	0	0	0	0

= Unimplemented or Reserved

Figure 12-10. ATD Compare Enable Register (ATDCMPE)

Table 12-17. ATDCMPE Field Descriptions

Field	Description
7–0 CMPE[7:0]	**Compare Enable for Conversion Number *n* (*n*= 7, 6, 5, 4, 3, 2, 1, 0) of a Sequence (*n conversion number, NOT channel number!)*** — These bits enable automatic compare of conversion results individually for conversions of a sequence. The sense of each comparison is determined by the CMPHT[*n*] bit in the ATDCMPHT register. For each conversion number with CMPE[*n*]=1 do the following: 1) Write compare value to ATDDR*n* result register 2) Write compare operator with CMPHT[*n*] in ATDCPMHT register CCF[*n*] in ATDSTAT2 register will flag individual success of any comparison. 0 No automatic compare 1 Automatic compare of results for conversion *n* of a sequence is enabled.

12.3.2.9 ATD Status Register 2 (ATDSTAT2)

This read-only register contains the Conversion Complete Flags CCF[7:0].

Module Base + 0x000A

	15	14	13	12	11	10	9	8	7	6	5	4	3	2	1	0
R	0	0	0	0	0	0	0	0	CCF[7:0]							
W																
Reset	0	0	0	0	0	0	0	0	0	0	0	0	0	0	0	0

= Unimplemented or Reserved

Figure 12-11. ATD Status Register 2 (ATDSTAT2)

Read: Anytime

Write: Anytime (for details see Table 12-18 below)

Table 12-18. ATDSTAT2 Field Descriptions

Field	Description
7–0 CCF[7:0]	**Conversion Complete Flag *n* (*n*= 7, 6, 5, 4, 3, 2, 1, 0) (*n conversion number, NOT channel number!)***— A conversion complete flag is set at the end of each conversion in a sequence. The flags are associated with the conversion position in a sequence (and also the result register number). Therefore in non-fifo mode, CCF[4] is set when the fifth conversion in a sequence is complete and the result is available in result register ATDDR4; CCF[5] is set when the sixth conversion in a sequence is complete and the result is available in ATDDR5, and so forth. If automatic compare of conversion results is enabled (CMPE[*n*]=1 in ATDCMPE), the conversion complete flag is only set if comparison with ATDDR*n* is true. If ACMPIE=1 a compare interrupt will be requested. In this case, as the ATDDR*n* result register is used to hold the compare value, the result will not be stored there at the end of the conversion but is lost. A flag CCF[*n*] is cleared when one of the following occurs: A) Write to ATDCTL5 (a new conversion sequence is started) B) If AFFC=0, write “1” to CCF[*n*] C) If AFFC=1 and CMPE[*n*]=0, read of result register ATDDR*n* D) If AFFC=1 and CMPE[*n*]=1, write to result register ATDDR*n* In case of a concurrent set and clear on CCF[*n*]: The clearing by method A) will overwrite the set. The clearing by methods B) or C) or D) will be overwritten by the set. 0 Conversion number *n* not completed or successfully compared 1 If (CMPE[*n*]=0): Conversion number *n* has completed. Result is ready in ATDDR*n*. If (CMPE[*n*]=1): Compare for conversion result number *n* with compare value in ATDDR*n*, using compare operator CMPGT[*n*] is true. (No result available in ATDDR*n*)

12.3.2.10 ATD Input Enable Register (ATDDIEN)

Module Base + 0x000C

	15	14	13	12	11	10	9	8	7	6	5	4	3	2	1	0
R	1	1	1	1	1	1	1	1	IEN[7:0]							
W																
Reset	1	1	1	1	1	1	1	1	0	0	0	0	0	0	0	0

= Unimplemented or Reserved

Figure 12-12. ATD Input Enable Register (ATDDIEN)

Read: Anytime

Write: Anytime

Table 12-19. ATDDIEN Field Descriptions

Field	Description
7–0 IEN[7:0]	**ATD Digital Input Enable on channel *x* (*x*= 7, 6, 5, 4, 3, 2, 1, 0)** — This bit controls the digital input buffer from the analog input pin (AN*x*) to the digital data register. 0 Disable digital input buffer to AN*x* pin 1 Enable digital input buffer on AN*x* pin. **Note:** Setting this bit will enable the corresponding digital input buffer continuously. If this bit is set while simultaneously using it as an analog port, there is potentially increased power consumption because the digital input buffer maybe in the linear region.

12.3.2.11 ATD Compare Higher Than Register (ATDCMPHT)

Writes to this register will abort current conversion sequence.

Read: Anytime

Write: Anytime

Module Base + 0x000E

	15	14	13	12	11	10	9	8	7	6	5	4	3	2	1	0
R	0	0	0	0	0	0	0	0	CMPHT[7:0]							
W																
Reset	0	0	0	0	0	0	0	0	0	0	0	0	0	0	0	0

= Unimplemented or Reserved

Figure 12-13. ATD Compare Higher Than Register (ATDCMPHT)

Table 12-20. ATDCMPHT Field Descriptions

Field	Description
7–0 CMPHT[7:0]	**Compare Operation Higher Than Enable for conversion number *n* (*n*= 7, 6, 5, 4, 3, 2, 1, 0) of a Sequence (*n conversion number, NOT channel number!)*** — This bit selects the operator for comparison of conversion results. 0 If result of conversion *n* is **lower or same than** compare value in ATDDR*n*, this is flagged in ATDSTAT2 1 If result of conversion *n* is **higher than** compare value in ATDDR*n*, this is flagged in ATDSTAT2

12.3.2.12 ATD Conversion Result Registers (ATDDR*n*)

The A/D conversion results are stored in 8 result registers. Results are always in unsigned data representation. Left and right justification is selected using the DJM control bit in ATDCTL3.

If automatic compare of conversions results is enabled (CMPE[*n*]=1 in ATDCMPE), these registers must be written with the compare values in left or right justified format depending on the actual value of the DJM bit. In this case, as the ATDDR*n* register is used to hold the compare value, the result will not be stored there at the end of the conversion but is lost.

Attention, n is the conversion number, NOT the channel number!

Read: Anytime

Write: Anytime

NOTE

For conversions not using automatic compare, results are stored in the result registers after each conversion. In this case avoid writing to ATDDRn except for initial values, because an A/D result might be overwritten.

12.3.2.12.1 Left Justified Result Data (DJM=0)

Module Base +
0x0010 = ATDDR0, 0x0012 = ATDDR1, 0x0014 = ATDDR2, 0x0016 = ATDDR3
0x0018 = ATDDR4, 0x001A = ATDDR5, 0x001C = ATDDR6, 0x001E = ATDDR7

	15	14	13	12	11	10	9	8	7	6	5	4	3	2	1	0
R	Result-Bit[11:0]												0	0	0	0
W																
Reset	0	0	0	0	0	0	0	0	0	0	0	0	0	0	0	0

= Unimplemented or Reserved

Figure 12-14. Left justified ATD conversion result register (ATDDR*n*)

Table 12-21 shows how depending on the A/D resolution the conversion result is transferred to the ATD result registers for left justified data. Compare is always done using all 12 bits of both the conversion result and the compare value in ATDDRn.

Table 12-21. Conversion result mapping to ATDDRn

A/D resolution	DJM	conversion result mapping to ATDDR*n*
8-bit data	0	Result-Bit[11:4] = conversion result, Result-Bit[3:0]=0000
10-bit data	0	Result-Bit[11:2] = conversion result, Result-Bit[1:0]=00
12-bit data	0	Result-Bit[11:0] = result

12.3.2.12.2 Right Justified Result Data (DJM=1)

Module Base +
0x0010 = ATDDR0, 0x0012 = ATDDR1, 0x0014 = ATDDR2, 0x0016 = ATDDR3
0x0018 = ATDDR4, 0x001A = ATDDR5, 0x001C = ATDDR6, 0x001E = ATDDR7

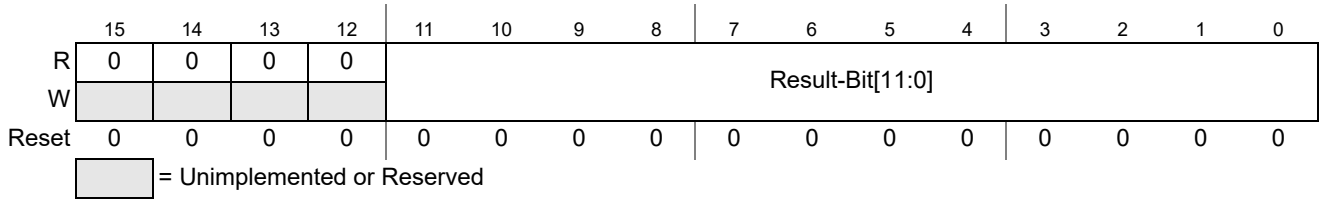

Figure 12-15. Right justified ATD conversion result register (ATDDR*n*)

Table 12-22 shows how depending on the A/D resolution the conversion result is transferred to the ATD result registers for right justified data. Compare is always done using all 12 bits of both the conversion result and the compare value in ATDDRn.

Table 12-22. Conversion result mapping to ATDDRn

A/D resolution	DJM	conversion result mapping to ATDDR*n*
8-bit data	1	Result-Bit[7:0] = result, Result-Bit[11:8]=0000
10-bit data	1	Result-Bit[9:0] = result, Result-Bit[11:10]=00
12-bit data	1	Result-Bit[11:0] = result

12.4 Functional Description

The ADC12B8C consists of an analog sub-block and a digital sub-block.

12.4.1 Analog Sub-Block

The analog sub-block contains all analog electronics required to perform a single conversion. Separate power supplies VDDA and VSSA allow to isolate noise of other MCU circuitry from the analog sub-block.

12.4.1.1 Sample and Hold Machine

The Sample and Hold Machine controls the storage and charge of the sample capacitor to the voltage level of the analog signal at the selected ADC input channel.

During the sample process the analog input connects directly to the storage node.

The input analog signals are unipolar and must be within the potential range of VSSA to VDDA.

During the hold process the analog input is disconnected from the storage node.

12.4.1.2 Analog Input Multiplexer

The analog input multiplexer connects one of the 8 external analog input channels to the sample and hold machine.

12.4.1.3 Analog-to-Digital (A/D) Machine

The A/D Machine performs analog to digital conversions. The resolution is program selectable to be either 8 or 10 or 12 bits. The A/D machine uses a successive approximation architecture. It functions by comparing the sampled and stored analog voltage with a series of binary coded discrete voltages.

By following a binary search algorithm, the A/D machine identifies the discrete voltage that is nearest to the sampled and stored voltage.

When not converting the A/D machine is automatically powered down.

Only analog input signals within the potential range of VRL to VRH (A/D reference potentials) will result in a non-railed digital output code.

12.4.2 Digital Sub-Block

This subsection describes some of the digital features in more detail. See Section 12.3.2, “Register Descriptions” for all details.

12.4.2.1 External Trigger Input

The external trigger feature allows the user to synchronize ATD conversions to an external event rather than relying only on software to trigger the ATD module when a conversion is about to take place. The external trigger signal (out of reset ATD channel 7, configurable in ATDCTL1) is programmable to be edge

or level sensitive with polarity control. Table 12-23 gives a brief description of the different combinations of control bits and their effect on the external trigger function

In order to avoid maybe false trigger events please enable the external digital input via ATDDIEN register first and in the following enable the external trigger mode by bit ETRIGE..

Table 12-23. External Trigger Control Bits

ETRIGLE	ETRIGP	ETRIGE	SCAN	Description
X	X	0	0	Ignores external trigger. Performs one conversion sequence and stops.
X	X	0	1	Ignores external trigger. Performs continuous conversion sequences.
0	0	1	X	Trigger falling edge sensitive. Performs one conversion sequence per trigger.
0	1	1	X	Trigger rising edge sensitive. Performs one conversion sequence per trigger.
1	0	1	X	Trigger low level sensitive. Performs continuous conversions while trigger level is active.
1	1	1	X	Trigger high level sensitive. Performs continuous conversions while trigger level is active.

In either level or edge sensitive mode, the first conversion begins when the trigger is received.

Once ETRIGE is enabled a conversion must be triggered externally after writing the ATDCTL5 register.

During a conversion in edge sensitive mode, if additional trigger events are detected the overrun error flag ETORF is set.

If level sensitive mode is active and the external trigger de-asserts and later asserts again during a conversion sequence, this does not constitute an overrun. Therefore, the flag is not set. If the trigger is left active in level sensitive mode when a sequence is about to complete, another sequence will be triggered immediately.

12.4.2.2 General-Purpose Digital Port Operation

Each ATD input pin can be switched between analog or digital input functionality. An analog multiplexer makes each ATD input pin selected as analog input available to the A/D converter.

The pad of the ATD input pin is always connected to the analog input channel of the analog mulitplexer.

Each pad input signal is buffered to the digital port register.

This buffer can be turned on or off with the ATDDIEN register for each ATD input pin.
This is important so that the buffer does not draw excess current when an ATD input pin is selected as analog input to the ADC12B8C.

12.5 Resets

At reset the ADC12B8C is in a power down state. The reset state of each individual bit is listed within the Register Description section (see Section 12.3.2, “Register Descriptions”) which details the registers and their bit-field.

12.6 Interrupts

The interrupts requested by the ADC12B8C are listed in Table 12-24. Refer to MCU specification for related vector address and priority.

Table 12-24. ATD Interrupt Vectors

Interrupt Source	CCR Mask	Local Enable
Sequence Complete Interrupt	I bit	ASCIE in ATDCTL2
Compare Interrupt	I bit	ACMPIE in ATDCTL2

See Section 12.3.2, “Register Descriptions” for further details.

Chapter 13
Analog-to-Digital Converter (ADC10B12CV2)

Revision History

Version Number	Revision Date	Effective Date	Author	Description of Changes
V02.00	13 May 2009	13 May 2009		Initial version copied from V01.06, changed unused Bits in ATDDIEN to read logic 1
V02.01	30.Nov 2009	30.Nov 2009		Updated Table 13-15 Analog Input Channel Select Coding - description of internal channels. Updated register ATDDR (left/right justified result) description in section 13.3.2.12.1/13-475 and 13.3.2.12.2/13-476 and added table Table 13-21 to improve feature description.
V02.02	09 Feb 2010	09 Feb 2010		Fixed typo in Table 13-9- conversion result for 3mV and 10bit resolution
V02.03	26 Feb 2010	26 Feb 2010		Corrected Table 13-15 Analog Input Channel Select Coding - description of internal channels.
V02.04	14 Apr 2010	14 Apr 2010		Corrected typos to be in-line with SoC level pin naming conventions for VDDA, VSSA, VRL and VRH.
V02.05	25 Aug 2010	25 Aug 2010		Removed feature of conversion during STOP and general wording clean up done in Section 13.4, “Functional Description
V02.06	09 Sep 2010	09 Sep 2010		Update of internal only information.
V02.07	11 Feb 2011	11 Feb 2011		Connectivity Information regarding internal channel_6 added to Table 13-15.
V02.08	29 Mar 2011	29 Mar 2011		Fixed typo in bit description field Table 13-14 for bits CD, CC, CB, CA. Last sentence contained a wrong highest channel number (it is not AN7 to AN0 instead it is AN11 to AN0).
V02.09	22. Jun 2012	22. Jun 2012		Update of register write access information in section 13.3.2.9/13-473.
V02.10	29 Jun 2012	29. Jun 2012		Removed IP name in block diagram Figure 13-1
V02.11	02 Oct 2012	02 Oct 2012		Added user information to avoid maybe false external trigger events when enabling the external trigger mode (Section 13.4.2.1, “External Trigger Input).

13.1 Introduction

The ADC10B12C is a 12-channel, 10-bit, multiplexed input successive approximation analog-to-digital converter. Refer to device electrical specifications for ATD accuracy.

13.1.1 Features

- 8-, 10-bit resolution.
- Automatic return to low power after conversion sequence
- Automatic compare with interrupt for higher than or less/equal than programmable value
- Programmable sample time.
- Left/right justified result data.
- External trigger control.
- Sequence complete interrupt.
- Analog input multiplexer for 8 analog input channels.
- Special conversions for VRH, VRL, (VRL+VRH)/2.
- 1-to-12 conversion sequence lengths.
- Continuous conversion mode.
- Multiple channel scans.
- Configurable external trigger functionality on any AD channel or any of four additional trigger inputs. The four additional trigger inputs can be chip external or internal. Refer to device specification for availability and connectivity.
- Configurable location for channel wrap around (when converting multiple channels in a sequence).

13.1.2 Modes of Operation

13.1.2.1 Conversion Modes

There is software programmable selection between performing **single** or **continuous conversion** on a **single channel** or **multiple channels**.

13.1.2.2 MCU Operating Modes

- **Stop Mode**
  Entering Stop Mode aborts any conversion sequence in progress and if a sequence was aborted restarts it after exiting stop mode. This has the same effect/consequences as starting a conversion sequence with write to ATDCTL5. So after exiting from stop mode with a previously aborted sequence all flags are cleared etc.
- **Wait Mode**
  ADC10B12C behaves same in Run and Wait Mode. For reduced power consumption continuous conversions should be aborted before entering Wait mode.
- **Freeze Mode**
  In Freeze Mode the ADC10B12C will either continue or finish or stop converting according to the FRZ1 and FRZ0 bits. This is useful for debugging and emulation.

13.1.3 Block Diagram

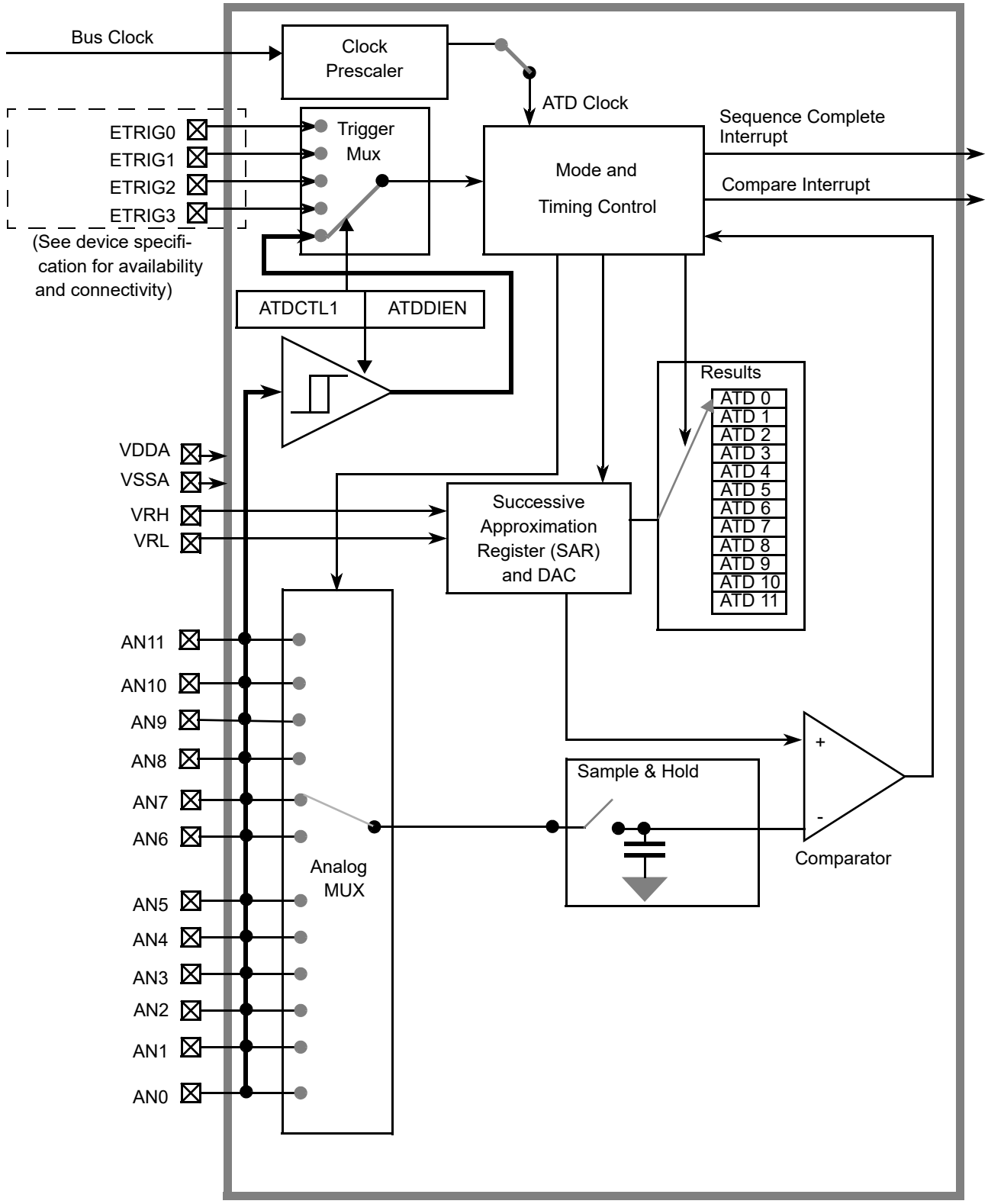

Figure 13-1. ADC10B12C Block Diagram

13.2 Signal Description

This section lists all inputs to the ADC10B12C block.

13.2.1 Detailed Signal Descriptions

13.2.1.1 AN*x* (*x* = 11, 10, 9, 8, 7, 6, 5, 4, 3, 2, 1, 0)

This pin serves as the analog input Channel *x*. It can also be configured as digital port or external trigger for the ATD conversion.

13.2.1.2 ETRIG3, ETRIG2, ETRIG1, ETRIG0

These inputs can be configured to serve as an external trigger for the ATD conversion.

Refer to device specification for availability and connectivity of these inputs!

13.2.1.3 VRH, VRL

VRH is the high reference voltage, VRL is the low reference voltage for ATD conversion.

13.2.1.4 VDDA, VSSA

These pins are the power supplies for the analog circuitry of the ADC10B12C block.

13.3 Memory Map and Register Definition

This section provides a detailed description of all registers accessible in the ADC10B12C.

13.3.1 Module Memory Map

Figure 13-2 gives an overview on all ADC10B12C registers.

NOTE

Register Address = Base Address + Address Offset, where the Base Address is defined at the MCU level and the Address Offset is defined at the module level.

Address	Name		Bit 7	6	5	4	3	2	1	Bit 0
0x0000	ATDCTL0	R W	Reserved	0	0	0	WRAP3	WRAP2	WRAP1	WRAP0
0x0001	ATDCTL1	R W	ETRIGSEL	SRES1	SRES0	SMP_DIS	ETRIGCH3	ETRIGCH2	ETRIGCH1	ETRIGCH0
0x0002	ATDCTL2	R W	0	AFFC	Reserved	ETRIGLE	ETRIGP	ETRIGE	ASCIE	ACMPIE

= Unimplemented or Reserved

Figure 13-2. ADC10B12C Register Summary (Sheet 1 of 3)

Address	Name		Bit 7	6	5	4	3	2	1	Bit 0
0x0003	ATDCTL3	R	DJM	S8C	S4C	S2C	S1C	FIFO	FRZ1	FRZ0
		W								
0x0004	ATDCTL4	R	SMP2	SMP1	SMP0	PRS[4:0]				
		W								
0x0005	ATDCTL5	R	0	SC	SCAN	MULT	CD	CC	CB	CA
		W								
0x0006	ATDSTAT0	R	SCF	0	ETORF	FIFOR	CC3	CC2	CC1	CC0
		W								
0x0007	Unimple-mented	R	0	0	0	0	0	0	0	0
		W								
0x0008	ATDCMPEH	R	0	0	0	0	CMPE[11:8]			
		W								
0x0009	ATDCMPEL	R	CMPE[7:0]							
		W								
0x000A	ATDSTAT2H	R	0	0	0	0	CCF[11:8]			
		W								
0x000B	ATDSTAT2L	R	CCF[7:0]							
		W								
0x000C	ATDDIENH	R	1	1	1	1	IEN[11:8]			
		W								
0x000D	ATDDIENL	R	IEN[7:0]							
		W								
0x000E	ATDCMPHTH	R	0	0	0	0	CMPHT[11:8]			
		W								
0x000F	ATDCMPHTL	R	CMPHT[7:0]							
		W								
0x0010	ATDDR0	R	See Section 13.3.2.12.1, “Left Justified Result Data (DJM=0)” and Section 13.3.2.12.2, “Right Justified Result Data (DJM=1)”							
		W								
0x0012	ATDDR1	R	See Section 13.3.2.12.1, “Left Justified Result Data (DJM=0)” and Section 13.3.2.12.2, “Right Justified Result Data (DJM=1)”							
		W								
0x0014	ATDDR2	R	See Section 13.3.2.12.1, “Left Justified Result Data (DJM=0)” and Section 13.3.2.12.2, “Right Justified Result Data (DJM=1)”							
		W								
0x0016	ATDDR3	R	See Section 13.3.2.12.1, “Left Justified Result Data (DJM=0)” and Section 13.3.2.12.2, “Right Justified Result Data (DJM=1)”							
		W								
0x0018	ATDDR4	R	See Section 13.3.2.12.1, “Left Justified Result Data (DJM=0)” and Section 13.3.2.12.2, “Right Justified Result Data (DJM=1)”							
		W								
0x001A	ATDDR5	R	See Section 13.3.2.12.1, “Left Justified Result Data (DJM=0)” and Section 13.3.2.12.2, “Right Justified Result Data (DJM=1)”							
		W								
0x001C	ATDDR6	R	See Section 13.3.2.12.1, “Left Justified Result Data (DJM=0)” and Section 13.3.2.12.2, “Right Justified Result Data (DJM=1)”							
		W								
0x001E	ATDDR7	R	See Section 13.3.2.12.1, “Left Justified Result Data (DJM=0)” and Section 13.3.2.12.2, “Right Justified Result Data (DJM=1)”							
		W								
0x0020	ATDDR8	R	See Section 13.3.2.12.1, “Left Justified Result Data (DJM=0)” and Section 13.3.2.12.2, “Right Justified Result Data (DJM=1)”							
		W								
0x0022	ATDDR9	R	See Section 13.3.2.12.1, “Left Justified Result Data (DJM=0)” and Section 13.3.2.12.2, “Right Justified Result Data (DJM=1)”							
		W								

= Unimplemented or Reserved

Figure 13-2. ADC10B12C Register Summary (Sheet 2 of 3)

Address	Name		Bit 7	6	5	4	3	2	1	Bit 0
0x0024	ATDDR10	R W	See Section 13.3.2.12.1, “Left Justified Result Data (DJM=0)” and Section 13.3.2.12.2, “Right Justified Result Data (DJM=1)”							
0x0026	ATDDR11	R W	See Section 13.3.2.12.1, “Left Justified Result Data (DJM=0)” and Section 13.3.2.12.2, “Right Justified Result Data (DJM=1)”							
0x0028 - 0x002F	Unimple-mented	R	0	0	0	0	0	0	0	0
		W								

= Unimplemented or Reserved

Figure 13-2. ADC10B12C Register Summary (Sheet 3 of 3)

13.3.2 Register Descriptions

This section describes in address order all the ADC10B12C registers and their individual bits.

13.3.2.1 ATD Control Register 0 (ATDCTL0)

Writes to this register will abort current conversion sequence.

Module Base + 0x0000

	7	6	5	4	3	2	1	0
R	Reserved	0	0	0	WRAP3	WRAP2	WRAP1	WRAP0
W								
Reset	0	0	0	0	1	1	1	1

= Unimplemented or Reserved

Figure 13-3. ATD Control Register 0 (ATDCTL0)

Read: Anytime

Write: Anytime, in special modes always write 0 to Reserved Bit 7.

Table 13-1. ATDCTL0 Field Descriptions

Field	Description
3-0 WRAP[3-0]	**Wrap Around Channel Select Bits** — These bits determine the channel for wrap around when doing multi-channel conversions. The coding is summarized in Table 13-2.

Table 13-2. Multi-Channel Wrap Around Coding

WRAP3	WRAP2	WRAP1	WRAP0	Multiple Channel Conversions (MULT = 1) Wraparound to AN0 after Converting
0	0	0	0	Reserved[1]
0	0	0	1	AN1
0	0	1	0	AN2
0	0	1	1	AN3
0	1	0	0	AN4
0	1	0	1	AN5
0	1	1	0	AN6
0	1	1	1	AN7
1	0	0	0	AN8
1	0	0	1	AN9
1	0	1	0	AN10
1	0	1	1	AN11
1	1	0	0	AN11
1	1	0	1	AN11
1	1	1	0	AN11
1	1	1	1	AN11

[1]If only AN0 should be converted use MULT=0.

13.3.2.2 ATD Control Register 1 (ATDCTL1)

Writes to this register will abort current conversion sequence.

Module Base + 0x0001

	7	6	5	4	3	2	1	0
R W	ETRIGSEL	SRES1	SRES0	SMP_DIS	ETRIGCH3	ETRIGCH2	ETRIGCH1	ETRIGCH0
Reset	0	0	1	0	1	1	1	1

Figure 13-4. ATD Control Register 1 (ATDCTL1)

Read: Anytime

Write: Anytime

Table 13-3. ATDCTL1 Field Descriptions

Field	Description
7 ETRIGSEL	**External Trigger Source Select** — This bit selects the external trigger source to be either one of the AD channels or one of the ETRIG3-0 inputs. See device specification for availability and connectivity of ETRIG3-0 inputs. If a particular ETRIG3-0 input option is not available, writing a 1 to ETRISEL only sets the bit but has no effect, this means that one of the AD channels (selected by ETRIGCH3-0) is configured as the source for external trigger. The coding is summarized in Table 13-5.
6–5 SRES[1:0]	**A/D Resolution Select** — These bits select the resolution of A/D conversion results. See Table 13-4 for coding.
4 SMP_DIS	**Discharge Before Sampling Bit** 0 No discharge before sampling. 1 The internal sample capacitor is discharged before sampling the channel. This adds 2 ATD clock cycles to the sampling time. This can help to detect an open circuit instead of measuring the previous sampled channel.
3–0 ETRIGCH[3:0]	**External Trigger Channel Select** — These bits select one of the AD channels or one of the ETRIG3-0 inputs as source for the external trigger. The coding is summarized in Table 13-5.

Table 13-4. A/D Resolution Coding

SRES1	SRES0	A/D Resolution
0	0	8-bit data
0	1	10-bit data
1	0	Reserved
1	1	Reserved

Table 13-5. External Trigger Channel Select Coding

ETRIGSEL	ETRIGCH3	ETRIGCH2	ETRIGCH1	ETRIGCH0	External trigger source is
0	0	0	0	0	AN0
0	0	0	0	1	AN1
0	0	0	1	0	AN2
0	0	0	1	1	AN3
0	0	1	0	0	AN4
0	0	1	0	1	AN5
0	0	1	1	0	AN6
0	0	1	1	1	AN7
0	1	0	0	0	AN8
0	1	0	0	1	AN9
0	1	0	1	0	AN10
0	1	0	1	1	AN11
0	1	1	0	0	AN11
0	1	1	0	1	AN11
0	1	1	1	0	AN11
0	1	1	1	1	AN11
1	0	0	0	0	ETRIG0[1]
1	0	0	0	1	ETRIG1[1]
1	0	0	1	0	ETRIG2[1]
1	0	0	1	1	ETRIG3[1]
1	0	1	X	X	Reserved
1	1	X	X	X	Reserved

[1] Only if ETRIG3-0 input option is available (see device specification), else ETRISEL is ignored, that means external trigger source is still on one of the AD channels selected by ETRIGCH3-0

13.3.2.3 ATD Control Register 2 (ATDCTL2)

Writes to this register will abort current conversion sequence.

Module Base + 0x0002

	7	6	5	4	3	2	1	0
R	0	AFFC	Reserved	ETRIGLE	ETRIGP	ETRIGE	ASCIE	ACMPIE
W								
Reset	0	0	0	0	0	0	0	0

= Unimplemented or Reserved

Figure 13-5. ATD Control Register 2 (ATDCTL2)

Read: Anytime

Write: Anytime

Table 13-6. ATDCTL2 Field Descriptions

Field	Description
6 AFFC	**ATD Fast Flag Clear All** 0 ATD flag clearing done by write 1 to respective CCF[*n*] flag. 1 Changes all ATD conversion complete flags to a fast clear sequence. For compare disabled (CMPE[*n*]=0) a read access to the result register will cause the associated CCF[*n*] flag to clear automatically. For compare enabled (CMPE[*n*]=1) a write access to the result register will cause the associated CCF[*n*] flag to clear automatically.
5 Reserved	Do not alter this bit from its reset value.It is for Manufacturer use only and can change the ATD behavior.
4 ETRIGLE	**External Trigger Level/Edge Control** — This bit controls the sensitivity of the external trigger signal. See Table 13-7 for details.
3 ETRIGP	**External Trigger Polarity** — This bit controls the polarity of the external trigger signal. See Table 13-7 for details.
2 ETRIGE	**External Trigger Mode Enable** — This bit enables the external trigger on one of the AD channels or one of the ETRIG3-0 inputs as described in Table 13-5. If the external trigger source is one of the AD channels, the digital input buffer of this channel is enabled. The external trigger allows to synchronize the start of conversion with external events. 0 Disable external trigger 1 Enable external trigger
1 ASCIE	**ATD Sequence Complete Interrupt Enable** 0 ATD Sequence Complete interrupt requests are disabled. 1 ATD Sequence Complete interrupt will be requested whenever SCF=1 is set.
0 ACMPIE	**ATD Compare Interrupt Enable** — If automatic compare is enabled for conversion *n* (CMPE[*n*]=1 in ATDCMPE register) this bit enables the compare interrupt. If the CCF[*n*] flag is set (showing a successful compare for conversion *n*), the compare interrupt is triggered. 0 ATD Compare interrupt requests are disabled. 1 For the conversions in a sequence for which automatic compare is enabled (CMPE[*n*]=1), an ATD Compare Interrupt will be requested whenever any of the respective CCF flags is set.

Table 13-7. External Trigger Configurations

ETRIGLE	ETRIGP	External Trigger Sensitivity
0	0	Falling edge
0	1	Rising edge
1	0	Low level
1	1	High level

13.3.2.4 ATD Control Register 3 (ATDCTL3)

Writes to this register will abort current conversion sequence.

Module Base + 0x0003

	7	6	5	4	3	2	1	0
R W	DJM	S8C	S4C	S2C	S1C	FIFO	FRZ1	FRZ0
Reset	0	0	1	0	0	0	0	0

= Unimplemented or Reserved

Figure 13-6. ATD Control Register 3 (ATDCTL3)

Read: Anytime

Write: Anytime

Table 13-8. ATDCTL3 Field Descriptions

Field	Description
7 DJM	**Result Register Data Justification** — Result data format is always unsigned. This bit controls justification of conversion data in the result registers. 0 Left justified data in the result registers. 1 Right justified data in the result registers. Table 13-9 gives example ATD results for an input signal range between 0 and 5.12 Volts.
6–3 S8C, S4C, S2C, S1C	**Conversion Sequence Length** — These bits control the number of conversions per sequence. Table 13-10 shows all combinations. At reset, S4C is set to 1 (sequence length is 4). This is to maintain software continuity to HC12 family.
2 FIFO	**Result Register FIFO Mode** — If this bit is zero (non-FIFO mode), the A/D conversion results map into the result registers based on the conversion sequence; the result of the first conversion appears in the first result register (ATDDR0), the second result in the second result register (ATDDR1), and so on. If this bit is one (FIFO mode) the conversion counter is not reset at the beginning or end of a conversion sequence; sequential conversion results are placed in consecutive result registers. In a continuously scanning conversion sequence, the result register counter will wrap around when it reaches the end of the result register file. The conversion counter value (CC3-0 in ATDSTAT0) can be used to determine where in the result register file, the current conversion result will be placed. Aborting a conversion or starting a new conversion clears the conversion counter even if FIFO=1. So the first result of a new conversion sequence, started by writing to ATDCTL5, will always be place in the first result register (ATDDDR0). Intended usage of FIFO mode is continuos conversion (SCAN=1) or triggered conversion (ETRIG=1). Which result registers hold valid data can be tracked using the conversion complete flags. Fast flag clear mode may be useful in a particular application to track valid data. If this bit is one, automatic compare of result registers is always disabled, that is ADC10B12C will behave as if ACMPIE and all CPME[*n*] were zero. 0 Conversion results are placed in the corresponding result register up to the selected sequence length. 1 Conversion results are placed in consecutive result registers (wrap around at end).
1–0 FRZ[1:0]	**Background Debug Freeze Enable** — When debugging an application, it is useful in many cases to have the ATD pause when a breakpoint (Freeze Mode) is encountered. These 2 bits determine how the ATD will respond to a breakpoint as shown in Table 13-11. Leakage onto the storage node and comparator reference capacitors may compromise the accuracy of an immediately frozen conversion depending on the length of the freeze period.

Table 13-9. Examples of ideal decimal ATD Results

Input Signal VRL = 0 Volts VRH = 5.12 Volts	8-Bit Codes (resolution=20mV)	10-Bit Codes (resolution=5mV)	Reserved
5.120 Volts	255	1023	Reserved
...	...	...	
0.022	1	4	
0.020	1	4	
0.018	1	4	
0.016	1	3	
0.014	1	3	
0.012	1	2	
0.010	1	2	
0.008	0	2	
0.006	0	1	
0.004	0	1	
0.003	0	1	
0.002	0	0	
0.000	0	0	

Table 13-10. Conversion Sequence Length Coding

S8C	S4C	S2C	S1C	Number of Conversions per Sequence
0	0	0	0	12
0	0	0	1	1
0	0	1	0	2
0	0	1	1	3
0	1	0	0	4
0	1	0	1	5
0	1	1	0	6
0	1	1	1	7
1	0	0	0	8
1	0	0	1	9
1	0	1	0	10
1	0	1	1	11
1	1	0	0	12
1	1	0	1	12
1	1	1	0	12
1	1	1	1	12

Table 13-11. ATD Behavior in Freeze Mode (Breakpoint)

FRZ1	FRZ0	Behavior in Freeze Mode
0	0	Continue conversion

Table 13-11. ATD Behavior in Freeze Mode (Breakpoint)

FRZ1	FRZ0	Behavior in Freeze Mode
0	1	Reserved
1	0	Finish current conversion, then freeze
1	1	Freeze Immediately

13.3.2.5 ATD Control Register 4 (ATDCTL4)

Writes to this register will abort current conversion sequence.

Module Base + 0x0004

	7	6	5	4	3	2	1	0
R W	SMP2	SMP1	SMP0	PRS[4:0]				
Reset	0	0	0	0	0	1	0	1

Figure 13-7. ATD Control Register 4 (ATDCTL4)

Read: Anytime

Write: Anytime

Table 13-12. ATDCTL4 Field Descriptions

Field	Description
7–5 SMP[2:0]	**Sample Time Select** — These three bits select the length of the sample time in units of ATD conversion clock cycles. Note that the ATD conversion clock period is itself a function of the prescaler value (bits PRS4-0). Table 13-13 lists the available sample time lengths.
4–0 PRS[4:0]	**ATD Clock Prescaler** — These 5 bits are the binary prescaler value PRS. The ATD conversion clock frequency is calculated as follows: $f_{ATDCLK} = \frac{f_{BUS}}{2 \times (PRS + 1)}$ Refer to Device Specification for allowed frequency range of f_{ATDCLK}.

Table 13-13. Sample Time Select

SMP2	SMP1	SMP0	Sample Time in Number of ATD Clock Cycles
0	0	0	4
0	0	1	6
0	1	0	8
0	1	1	10
1	0	0	12
1	0	1	16
1	1	0	20
1	1	1	24

13.3.2.6 ATD Control Register 5 (ATDCTL5)

Writes to this register will abort current conversion sequence and start a new conversion sequence. If the external trigger function is enabled (ETRIGE=1) an initial write to ATDCTL5 is required to allow starting of a conversion sequence which will then occur on each trigger event. Start of conversion means the beginning of the sampling phase.

Module Base + 0x0005

	7	6	5	4	3	2	1	0
R	0	SC	SCAN	MULT	CD	CC	CB	CA
W								
Reset	0	0	0	0	0	0	0	0

= Unimplemented or Reserved

Figure 13-8. ATD Control Register 5 (ATDCTL5)

Read: Anytime

Write: Anytime

Table 13-14. ATDCTL5 Field Descriptions

Field	Description
6 SC	**Special Channel Conversion Bit** — If this bit is set, then special channel conversion can be selected using CD, CC, CB and CA of ATDCTL5. Table 13-15 lists the coding. 0 Special channel conversions disabled 1 Special channel conversions enabled
5 SCAN	**Continuous Conversion Sequence Mode** — This bit selects whether conversion sequences are performed continuously or only once. If the external trigger function is enabled (ETRIGE=1) setting this bit has no effect, thus the external trigger always starts a single conversion sequence. 0 Single conversion sequence 1 Continuous conversion sequences (scan mode)
4 MULT	**Multi-Channel Sample Mode** — When MULT is 0, the ATD sequence controller samples only from the specified analog input channel for an entire conversion sequence. The analog channel is selected by channel selection code (control bits CD/CC/CB/CA located in ATDCTL5). When MULT is 1, the ATD sequence controller samples across channels. The number of channels sampled is determined by the sequence length value (S8C, S4C, S2C, S1C). The first analog channel examined is determined by channel selection code (CD, CC, CB, CA control bits); subsequent channels sampled in the sequence are determined by incrementing the channel selection code or wrapping around to AN0 (channel 0). 0 Sample only one channel 1 Sample across several channels
3–0 CD, CC, CB, CA	**Analog Input Channel Select Code** — These bits select the analog input channel(s). Table 13-15 lists the coding used to select the various analog input channels. In the case of single channel conversions (MULT=0), this selection code specifies the channel to be examined. In the case of multiple channel conversions (MULT=1), this selection code specifies the first channel to be examined in the conversion sequence. Subsequent channels are determined by incrementing the channel selection code or wrapping around to AN0 (after converting the channel defined by the Wrap Around Channel Select Bits WRAP3-0 in ATDCTL0). When starting with a channel number higher than the one defined by WRAP3-0 the first wrap around will be AN11 to AN0.

Table 13-15. Analog Input Channel Select Coding

SC	CD	CC	CB	CA	Analog Input Channel
0	0	0	0	0	AN0
	0	0	0	1	AN1
	0	0	1	0	AN2
	0	0	1	1	AN3
	0	1	0	0	AN4
	0	1	0	1	AN5
	0	1	1	0	AN6
	0	1	1	1	AN7
	1	0	0	0	AN8
	1	0	0	1	AN9
	1	0	1	0	AN10
	1	0	1	1	AN11
	1	1	0	0	AN11
	1	1	0	1	AN11
	1	1	1	0	AN11
	1	1	1	1	AN11
1	0	0	0	0	Internal_6,
	0	0	0	1	Internal_7
	0	0	1	0	Internal_0
	0	0	1	1	Internal_1
	0	1	0	0	VRH
	0	1	0	1	VRL
	0	1	1	0	(VRH+VRL) / 2
	0	1	1	1	Reserved
	1	0	0	0	Internal_2
	1	0	0	1	Internal_3
	1	0	1	0	Internal_4
	1	0	1	1	Internal_5
	1	1	X	X	Reserved

13.3.2.7 ATD Status Register 0 (ATDSTAT0)

This register contains the Sequence Complete Flag, overrun flags for external trigger and FIFO mode, and the conversion counter.

Module Base + 0x0006

	7	6	5	4	3	2	1	0
R	SCF	0	ETORF	FIFOR	CC3	CC2	CC1	CC0
W								
Reset	0	0	0	0	0	0	0	0

= Unimplemented or Reserved

Figure 13-9. ATD Status Register 0 (ATDSTAT0)

Read: Anytime

Write: Anytime (No effect on (CC3, CC2, CC1, CC0))

Table 13-16. ATDSTAT0 Field Descriptions

Field	Description
7 SCF	**Sequence Complete Flag** — This flag is set upon completion of a conversion sequence. If conversion sequences are continuously performed (SCAN=1), the flag is set after each one is completed. This flag is cleared when one of the following occurs: A) Write “1” to SCF B) Write to ATDCTL5 (a new conversion sequence is started) C) If AFFC=1 and a result register is read 0 Conversion sequence not completed 1 Conversion sequence has completed
5 ETORF	**External Trigger Overrun Flag** — While in edge sensitive mode (ETRIGLE=0), if additional active edges are detected while a conversion sequence is in process the overrun flag is set. This flag is cleared when one of the following occurs: A) Write “1” to ETORF B) Write to ATDCTL0,1,2,3,4, ATDCMPE or ATDCMPHT (a conversion sequence is aborted) C) Write to ATDCTL5 (a new conversion sequence is started) 0 No External trigger overrun error has occurred 1 External trigger overrun error has occurred
4 FIFOR	**Result Register Overrun Flag** — This bit indicates that a result register has been written to before its associated conversion complete flag (CCF) has been cleared. This flag is most useful when using the FIFO mode because the flag potentially indicates that result registers are out of sync with the input channels. However, it is also practical for non-FIFO modes, and indicates that a result register has been overwritten before it has been read (i.e. the old data has been lost). This flag is cleared when one of the following occurs: A) Write “1” to FIFOR B) Write to ATDCTL0,1,2,3,4, ATDCMPE or ATDCMPHT (a conversion sequence is aborted) C) Write to ATDCTL5 (a new conversion sequence is started) 0 No overrun has occurred 1 Overrun condition exists (result register has been written while associated CCFx flag was still set)

Table 13-16. ATDSTAT0 Field Descriptions (continued)

Field	Description
3–0 CC[3:0]	**Conversion Counter** — These 4 read-only bits are the binary value of the conversion counter. The conversion counter points to the result register that will receive the result of the current conversion. E.g. CC3=0, CC2=1, CC1=1, CC0=0 indicates that the result of the current conversion will be in ATD Result Register 6. If in non-FIFO mode (FIFO=0) the conversion counter is initialized to zero at the beginning and end of the conversion sequence. If in FIFO mode (FIFO=1) the register counter is not initialized. The conversion counter wraps around when its maximum value is reached. Aborting a conversion or starting a new conversion clears the conversion counter even if FIFO=1.

13.3.2.8 ATD Compare Enable Register (ATDCMPE)

Writes to this register will abort current conversion sequence.

Read: Anytime

Write: Anytime

Module Base + 0x0008

	15	14	13	12	11	10	9	8	7	6	5	4	3	2	1	0
R	0	0	0	0	CMPE[11:0]											
W																
Reset	0	0	0	0	0	0	0	0	0	0	0	0	0	0	0	0

= Unimplemented or Reserved

Figure 13-10. ATD Compare Enable Register (ATDCMPE)

Table 13-17. ATDCMPE Field Descriptions

Field	Description
11–0 CMPE[11:0]	**Compare Enable for Conversion Number *n* (*n*= 11, 10, 9, 8, 7, 6, 5, 4, 3, 2, 1, 0) of a Sequence (*n conversion number, NOT channel number!)*** — These bits enable automatic compare of conversion results individually for conversions of a sequence. The sense of each comparison is determined by the CMPHT[*n*] bit in the ATDCMPHT register. For each conversion number with CMPE[*n*]=1 do the following: 1) Write compare value to ATDDR*n* result register 2) Write compare operator with CMPHT[*n*] in ATDCPMHT register CCF[*n*] in ATDSTAT2 register will flag individual success of any comparison. 0 No automatic compare 1 Automatic compare of results for conversion *n* of a sequence is enabled.

13.3.2.9 ATD Status Register 2 (ATDSTAT2)

This read-only register contains the Conversion Complete Flags CCF[11:0].

Module Base + 0x000A

	15	14	13	12	11	10	9	8	7	6	5	4	3	2	1	0
R	0	0	0	0	CCF[11:0]											
W																
Reset	0	0	0	0	0	0	0	0	0	0	0	0	0	0	0	0

= Unimplemented or Reserved

Figure 13-11. ATD Status Register 2 (ATDSTAT2)

Read: Anytime

Write: Anytime (for details see Table 13-18 below)

Table 13-18. ATDSTAT2 Field Descriptions

Field	Description
11–0 CCF[11:0]	**Conversion Complete Flag *n* (*n*= 11, 10, 9, 8, 7, 6, 5, 4, 3, 2, 1, 0) (*n conversion number, NOT channel number!)***— A conversion complete flag is set at the end of each conversion in a sequence. The flags are associated with the conversion position in a sequence (and also the result register number). Therefore in non-fifo mode, CCF[4] is set when the fifth conversion in a sequence is complete and the result is available in result register ATDDR4; CCF[5] is set when the sixth conversion in a sequence is complete and the result is available in ATDDR5, and so forth. If automatic compare of conversion results is enabled (CMPE[*n*]=1 in ATDCMPE), the conversion complete flag is only set if comparison with ATDDR*n* is true. If ACMPIE=1 a compare interrupt will be requested. In this case, as the ATDDR*n* result register is used to hold the compare value, the result will not be stored there at the end of the conversion but is lost. A flag CCF[*n*] is cleared when one of the following occurs: A) Write to ATDCTL5 (a new conversion sequence is started) B) If AFFC=0, write “1” to CCF[*n*] C) If AFFC=1 and CMPE[*n*]=0, read of result register ATDDR*n* D) If AFFC=1 and CMPE[*n*]=1, write to result register ATDDR*n* In case of a concurrent set and clear on CCF[*n*]: The clearing by method A) will overwrite the set. The clearing by methods B) or C) or D) will be overwritten by the set. 0 Conversion number *n* not completed or successfully compared 1 If (CMPE[*n*]=0): Conversion number *n* has completed. Result is ready in ATDDR*n*. If (CMPE[*n*]=1): Compare for conversion result number *n* with compare value in ATDDR*n*, using compare operator CMPGT[*n*] is true. (No result available in ATDDR*n*)

13.3.2.10 ATD Input Enable Register (ATDDIEN)

Module Base + 0x000C

	15	14	13	12	11	10	9	8	7	6	5	4	3	2	1	0
R	1	1	1	1	IEN[11:0]											
W																
Reset	1	1	1	1	0	0	0	0	0	0	0	0	0	0	0	0

= Unimplemented or Reserved

Figure 13-12. ATD Input Enable Register (ATDDIEN)

Read: Anytime

Write: Anytime

Table 13-19. ATDDIEN Field Descriptions

Field	Description
11–0 IEN[11:0]	**ATD Digital Input Enable on channel *x* (*x*= 11, 10, 9, 8, 7, 6, 5, 4, 3, 2, 1, 0)** — This bit controls the digital input buffer from the analog input pin (AN*x*) to the digital data register. 0 Disable digital input buffer to AN*x* pin 1 Enable digital input buffer on AN*x* pin. **Note:** Setting this bit will enable the corresponding digital input buffer continuously. If this bit is set while simultaneously using it as an analog port, there is potentially increased power consumption because the digital input buffer maybe in the linear region.

13.3.2.11 ATD Compare Higher Than Register (ATDCMPHT)

Writes to this register will abort current conversion sequence.

Read: Anytime

Write: Anytime

Module Base + 0x000E

	15	14	13	12	11	10	9	8	7	6	5	4	3	2	1	0
R	0	0	0	0	CMPHT[11:0]											
W																
Reset	0	0	0	0	0	0	0	0	0	0	0	0	0	0	0	0

= Unimplemented or Reserved

Figure 13-13. ATD Compare Higher Than Register (ATDCMPHT)

Table 13-20. ATDCMPHT Field Descriptions

Field	Description
11–0 CMPHT[11:0]	**Compare Operation Higher Than Enable for conversion number *n* (*n*= 11, 10, 9, 8, 7, 6, 5, 4, 3, 2, 1, 0) of a Sequence (*n conversion number, NOT channel number!)*** — This bit selects the operator for comparison of conversion results. 0 If result of conversion *n* is **lower or same than** compare value in ATDDR*n*, this is flagged in ATDSTAT2 1 If result of conversion *n* is **higher than** compare value in ATDDR*n*, this is flagged in ATDSTAT2

13.3.2.12 ATD Conversion Result Registers (ATDDR*n*)

The A/D conversion results are stored in 12 result registers. Results are always in unsigned data representation. Left and right justification is selected using the DJM control bit in ATDCTL3.

If automatic compare of conversions results is enabled (CMPE[*n*]=1 in ATDCMPE), these registers must be written with the compare values in left or right justified format depending on the actual value of the DJM bit. In this case, as the ATDDR*n* register is used to hold the compare value, the result will not be stored there at the end of the conversion but is lost.

Attention, n is the conversion number, NOT the channel number!

Read: Anytime

Write: Anytime

NOTE

For conversions not using automatic compare, results are stored in the result registers after each conversion. In this case avoid writing to ATDDRn except for initial values, because an A/D result might be overwritten.

13.3.2.12.1 Left Justified Result Data (DJM=0)

Module Base +
0x0010 = ATDDR0, 0x0012 = ATDDR1, 0x0014 = ATDDR2, 0x0016 = ATDDR3
0x0018 = ATDDR4, 0x001A = ATDDR5, 0x001C = ATDDR6, 0x001E = ATDDR7
0x0020 = ATDDR8, 0x0022 = ATDDR9, 0x0024 = ATDDR10, 0x0026 = ATDDR11

	15	14	13	12	11	10	9	8	7	6	5	4	3	2	1	0
R	Result-Bit[11:0]												0	0	0	0
W																
Reset	0	0	0	0	0	0	0	0	0	0	0	0	0	0	0	0

= Unimplemented or Reserved

Figure 13-14. Left justified ATD conversion result register (ATDDR*n*)

Table 13-21 shows how depending on the A/D resolution the conversion result is transferred to the ATD result registers for left justified data. Compare is always done using all 12 bits of both the conversion result and the compare value in ATDDRn.

Table 13-21. Conversion result mapping to ATDDRn

A/D resolution	DJM	conversion result mapping to ATDDR*n*
8-bit data	0	Result-Bit[11:4] = conversion result, Result-Bit[3:0]=0000
10-bit data	0	Result-Bit[11:2] = conversion result, Result-Bit[1:0]=00

13.3.2.12.2 Right Justified Result Data (DJM=1)

Module Base +
0x0010 = ATDDR0, 0x0012 = ATDDR1, 0x0014 = ATDDR2, 0x0016 = ATDDR3
0x0018 = ATDDR4, 0x001A = ATDDR5, 0x001C = ATDDR6, 0x001E = ATDDR7
0x0020 = ATDDR8, 0x0022 = ATDDR9, 0x0024 = ATDDR10, 0x0026 = ATDDR11

	15	14	13	12	11	10	9	8	7	6	5	4	3	2	1	0
R	0	0	0	0	Result-Bit[11:0]											
W																
Reset	0	0	0	0	0	0	0	0	0	0	0	0	0	0	0	0

= Unimplemented or Reserved

Figure 13-15. Right justified ATD conversion result register (ATDDR*n*)

Table 13-22 shows how depending on the A/D resolution the conversion result is transferred to the ATD result registers for right justified data. Compare is always done using all 12 bits of both the conversion result and the compare value in ATDDRn.

Table 13-22. Conversion result mapping to ATDDRn

A/D resolution	DJM	conversion result mapping to ATDDR*n*
8-bit data	1	Result-Bit[11:8]=0000, Result-Bit[7:0] = conversion result
10-bit data	1	Result-Bit[11:10]=00, Result-Bit[9:0] = conversion result

13.4 Functional Description

The ADC10B12C consists of an analog sub-block and a digital sub-block.

13.4.1 Analog Sub-Block

The analog sub-block contains all analog electronics required to perform a single conversion. Separate power supplies VDDA and VSSA allow to isolate noise of other MCU circuitry from the analog sub-block.

13.4.1.1 Sample and Hold Machine

The Sample and Hold Machine controls the storage and charge of the sample capacitor to the voltage level of the analog signal at the selected ADC input channel.

During the sample process the analog input connects directly to the storage node.

The input analog signals are unipolar and must be within the potential range of VSSA to VDDA.

During the hold process the analog input is disconnected from the storage node.

13.4.1.2 Analog Input Multiplexer

The analog input multiplexer connects one of the 12 external analog input channels to the sample and hold machine.

13.4.1.3 Analog-to-Digital (A/D) Machine

The A/D Machine performs analog to digital conversions. The resolution is program selectable to be either 8 or 10 bits. The A/D machine uses a successive approximation architecture. It functions by comparing the sampled and stored analog voltage with a series of binary coded discrete voltages. By following a binary search algorithm, the A/D machine identifies the discrete voltage that is nearest to the sampled and stored voltage.

When not converting the A/D machine is automatically powered down.

Only analog input signals within the potential range of VRL to VRH (A/D reference potentials) will result in a non-railed digital output code.

13.4.2 Digital Sub-Block

This subsection describes some of the digital features in more detail. See Section 13.3.2, “Register Descriptions” for all details.

13.4.2.1 External Trigger Input

The external trigger feature allows the user to synchronize ATD conversions to an external event rather than relying only on software to trigger the ATD module when a conversions is about to take place. The external trigger signal (out of reset ATD channel 11, configurable in ATDCTL1) is programmable to be

edge or level sensitive with polarity control. Table 13-23 gives a brief description of the different combinations of control bits and their effect on the external trigger function.

In order to avoid maybe false trigger events please enable the external digital input via ATDDIEN register first and in the following enable the external trigger mode by bit ETRIGE.

Table 13-23. External Trigger Control Bits

ETRIGLE	ETRIGP	ETRIGE	SCAN	Description
X	X	0	0	Ignores external trigger. Performs one conversion sequence and stops.
X	X	0	1	Ignores external trigger. Performs continuous conversion sequences.
0	0	1	X	Trigger falling edge sensitive. Performs one conversion sequence per trigger.
0	1	1	X	Trigger rising edge sensitive. Performs one conversion sequence per trigger.
1	0	1	X	Trigger low level sensitive. Performs continuous conversions while trigger level is active.
1	1	1	X	Trigger high level sensitive. Performs continuous conversions while trigger level is active.

In either level or edge sensitive modes, the first conversion begins when the trigger is received.

Once ETRIGE is enabled a conversion must be triggered externally after writing to ATDCTL5 register.

During a conversion in edge sensitive mode, if additional trigger events are detected the overrun error flag ETORF is set.

If level sensitive mode is active and the external trigger de-asserts and later asserts again during a conversion sequence, this does not constitute an overrun. Therefore, the flag is not set. If the trigger is left active in level sensitive mode when a sequence is about to complete, another sequence will be triggered immediately.

13.4.2.2 General-Purpose Digital Port Operation

Each ATD input pin can be switched between analog or digital input functionality. An analog multiplexer makes each ATD input pin selected as analog input available to the A/D converter.

The pad of the ATD input pin is always connected to the analog input channel of the analog mulitplexer.

Each pad input signal is buffered to the digital port register.

This buffer can be turned on or off with the ATDDIEN register for each ATD input pin.
This is important so that the buffer does not draw excess current when an ATD input pin is selected as analog input to the ADC10B12C.

13.5 Resets

At reset the ADC10B12C is in a power down state. The reset state of each individual bit is listed within the Register Description section (see Section 13.3.2, “Register Descriptions”) which details the registers and their bit-field.

13.6 Interrupts

The interrupts requested by the ADC10B12C are listed in Table 13-24. Refer to MCU specification for related vector address and priority.

Table 13-24. ATD Interrupt Vectors

Interrupt Source	CCR Mask	Local Enable
Sequence Complete Interrupt	I bit	ASCIE in ATDCTL2
Compare Interrupt	I bit	ACMPIE in ATDCTL2

See Section 13.3.2, “Register Descriptions” for further details.

Chapter 14
Analog-to-Digital Converter (ADC12B12CV2)

Revision History

Version Number	Revision Date	Effective Date	Author	Description of Changes
V02.00	13 May 2009	13 May 2009		Initial version copied from V01.06, changed unused Bits in ATDDIEN to read logic 1
V02.01	30.Nov 2009	30.Nov 2009		Updated Table 14-15 Analog Input Channel Select Coding - description of internal channels. Updated register ATDDR (left/right justified result) description in section 14.3.2.12.1/14-502 and 14.3.2.12.2/14-503 and added table Table 14-21 to improve feature description.
V02.02	09 Feb 2010	09 Feb 2010		Fixed typo in Table 14-9- conversion result for 3mV and 10bit resolution
V02.03	26 Feb 2010	26 Feb 2010		Corrected Table 14-15 Analog Input Channel Select Coding - description of internal channels.
V02.04	14 Apr 2010	14 Apr 2010		Corrected typos to be in-line with SoC level pin naming conventions for VDDA, VSSA, VRL and VRH.
V02.05	25 Aug 2010	25 Aug 2010		Removed feature of conversion during STOP and general wording clean up done in Section 14.4, “Functional Description
V02.06	09 Sep 2010	09 Sep 2010		Update of internal only information.
V02.07	11 Feb 2011	11 Feb 2011		Connectivity Information regarding internal channel_6 added to Table 14-15.
V02.08	29 Mar 2011	29 Mar 2011		Fixed typo in bit description field Table 14-14 for bits CD, CC, CB, CA. Last sentence contained a wrong highest channel number (it is not AN7 to AN0 instead it is AN11 to AN0).
V02.09	22. Jun 2012	22. Jun 2012		Update of register write access information in section 14.3.2.9/14-500.
V02.10	29 Jun 2012	29. Jun 2012		Removed IP name in block diagram Figure 14-1
V02.11	02 Oct 2012	02 Oct 2012		Added user information to avoid maybe false external trigger events when enabling the external trigger mode (Section 14.4.2.1, “External Trigger Input).

14.1 Introduction

The ADC12B12C is a 12-channel, 12-bit, multiplexed input successive approximation analog-to-digital converter. Refer to device electrical specifications for ATD accuracy.

14.1.1 Features

- 8-, 10-, or 12-bit resolution.
- Automatic return to low power after conversion sequence
- Automatic compare with interrupt for higher than or less/equal than programmable value
- Programmable sample time.
- Left/right justified result data.
- External trigger control.
- Sequence complete interrupt.
- Analog input multiplexer for 8 analog input channels.
- Special conversions for VRH, VRL, (VRL+VRH)/2.
- 1-to-12 conversion sequence lengths.
- Continuous conversion mode.
- Multiple channel scans.
- Configurable external trigger functionality on any AD channel or any of four additional trigger inputs. The four additional trigger inputs can be chip external or internal. Refer to device specification for availability and connectivity.
- Configurable location for channel wrap around (when converting multiple channels in a sequence).

14.1.2 Modes of Operation

14.1.2.1 Conversion Modes

There is software programmable selection between performing **single** or **continuous conversion** on a **single channel** or **multiple channels**.

14.1.2.2 MCU Operating Modes

- **Stop Mode**
  Entering Stop Mode aborts any conversion sequence in progress and if a sequence was aborted restarts it after exiting stop mode. This has the same effect/consequences as starting a conversion sequence with write to ATDCTL5. So after exiting from stop mode with a previously aborted sequence all flags are cleared etc.
- **Wait Mode**
  ADC12B12C behaves same in Run and Wait Mode. For reduced power consumption continuous conversions should be aborted before entering Wait mode.
- **Freeze Mode**
  In Freeze Mode the ADC12B12C will either continue or finish or stop converting according to the FRZ1 and FRZ0 bits. This is useful for debugging and emulation.

14.1.3 Block Diagram

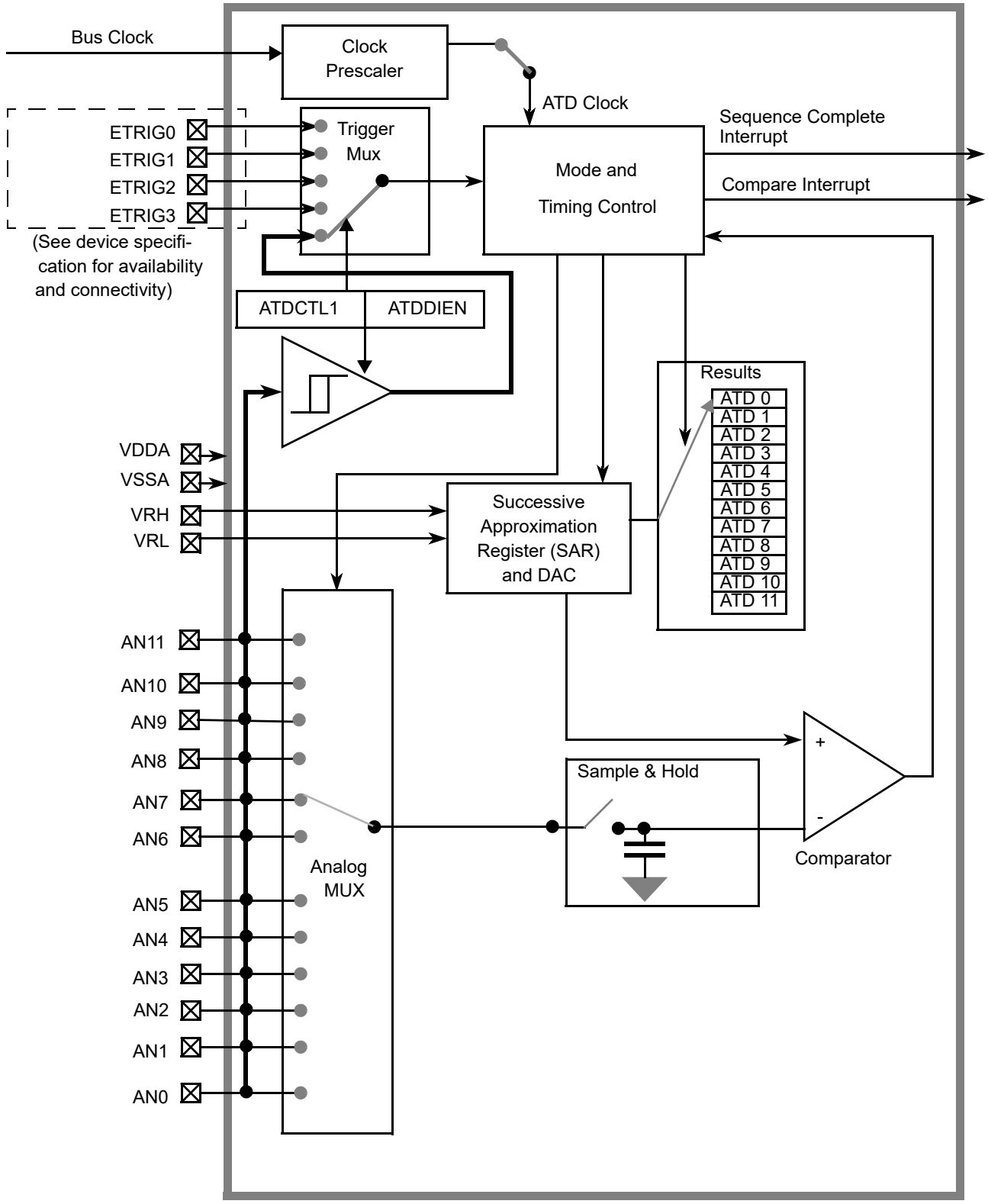

Figure 14-1. ADC12B12C Block Diagram

14.2 Signal Description

This section lists all inputs to the ADC12B12C block.

14.2.1 Detailed Signal Descriptions

14.2.1.1 AN*x* (*x* = 11, 10, 9, 8, 7, 6, 5, 4, 3, 2, 1, 0)

This pin serves as the analog input Channel *x*. It can also be configured as digital port or external trigger for the ATD conversion.

14.2.1.2 ETRIG3, ETRIG2, ETRIG1, ETRIG0

These inputs can be configured to serve as an external trigger for the ATD conversion.

Refer to device specification for availability and connectivity of these inputs!

14.2.1.3 VRH, VRL

VRH is the high reference voltage, VRL is the low reference voltage for ATD conversion.

14.2.1.4 VDDA, VSSA

These pins are the power supplies for the analog circuitry of the ADC12B12C block.

14.3 Memory Map and Register Definition

This section provides a detailed description of all registers accessible in the ADC12B12C.

14.3.1 Module Memory Map

Figure 14-2 gives an overview on all ADC12B12C registers.

NOTE

Register Address = Base Address + Address Offset, where the Base Address is defined at the MCU level and the Address Offset is defined at the module level.

Address	Name		Bit 7	6	5	4	3	2	1	Bit 0
0x0000	ATDCTL0	R W	Reserved	0	0	0	WRAP3	WRAP2	WRAP1	WRAP0
0x0001	ATDCTL1	R W	ETRIGSEL	SRES1	SRES0	SMP_DIS	ETRIGCH3	ETRIGCH2	ETRIGCH1	ETRIGCH0
0x0002	ATDCTL2	R W	0	AFFC	Reserved	ETRIGLE	ETRIGP	ETRIGE	ASCIE	ACMPIE

= Unimplemented or Reserved

Figure 14-2. ADC12B12C Register Summary (Sheet 1 of 3)

Address	Name		Bit 7	6	5	4	3	2	1	Bit 0
0x0003	ATDCTL3	R	DJM	S8C	S4C	S2C	S1C	FIFO	FRZ1	FRZ0
		W								
0x0004	ATDCTL4	R	SMP2	SMP1	SMP0	PRS[4:0]				
		W								
0x0005	ATDCTL5	R	0	SC	SCAN	MULT	CD	CC	CB	CA
		W								
0x0006	ATDSTAT0	R	SCF	0	ETORF	FIFOR	CC3	CC2	CC1	CC0
		W								
0x0007	Unimple-mented	R	0	0	0	0	0	0	0	0
		W								
0x0008	ATDCMPEH	R	0	0	0	0	CMPE[11:8]			
		W								
0x0009	ATDCMPEL	R	CMPE[7:0]							
		W								
0x000A	ATDSTAT2H	R	0	0	0	0	CCF[11:8]			
		W								
0x000B	ATDSTAT2L	R	CCF[7:0]							
		W								
0x000C	ATDDIENH	R	1	1	1	1	IEN[11:8]			
		W								
0x000D	ATDDIENL	R	IEN[7:0]							
		W								
0x000E	ATDCMPHTH	R	0	0	0	0	CMPHT[11:8]			
		W								
0x000F	ATDCMPHTL	R	CMPHT[7:0]							
		W								
0x0010	ATDDR0	R	See Section 14.3.2.12.1, “Left Justified Result Data (DJM=0)” and Section 14.3.2.12.2, “Right Justified Result Data (DJM=1)”							
		W								
0x0012	ATDDR1	R	See Section 14.3.2.12.1, “Left Justified Result Data (DJM=0)” and Section 14.3.2.12.2, “Right Justified Result Data (DJM=1)”							
		W								
0x0014	ATDDR2	R	See Section 14.3.2.12.1, “Left Justified Result Data (DJM=0)” and Section 14.3.2.12.2, “Right Justified Result Data (DJM=1)”							
		W								
0x0016	ATDDR3	R	See Section 14.3.2.12.1, “Left Justified Result Data (DJM=0)” and Section 14.3.2.12.2, “Right Justified Result Data (DJM=1)”							
		W								
0x0018	ATDDR4	R	See Section 14.3.2.12.1, “Left Justified Result Data (DJM=0)” and Section 14.3.2.12.2, “Right Justified Result Data (DJM=1)”							
		W								
0x001A	ATDDR5	R	See Section 14.3.2.12.1, “Left Justified Result Data (DJM=0)” and Section 14.3.2.12.2, “Right Justified Result Data (DJM=1)”							
		W								
0x001C	ATDDR6	R	See Section 14.3.2.12.1, “Left Justified Result Data (DJM=0)” and Section 14.3.2.12.2, “Right Justified Result Data (DJM=1)”							
		W								
0x001E	ATDDR7	R	See Section 14.3.2.12.1, “Left Justified Result Data (DJM=0)” and Section 14.3.2.12.2, “Right Justified Result Data (DJM=1)”							
		W								
0x0020	ATDDR8	R	See Section 14.3.2.12.1, “Left Justified Result Data (DJM=0)” and Section 14.3.2.12.2, “Right Justified Result Data (DJM=1)”							
		W								
0x0022	ATDDR9	R	See Section 14.3.2.12.1, “Left Justified Result Data (DJM=0)” and Section 14.3.2.12.2, “Right Justified Result Data (DJM=1)”							
		W								

= Unimplemented or Reserved

Figure 14-2. ADC12B12C Register Summary (Sheet 2 of 3)

Address	Name		Bit 7	6	5	4	3	2	1	Bit 0
0x0024	ATDDR10	R W	See Section 14.3.2.12.1, “Left Justified Result Data (DJM=0)” and Section 14.3.2.12.2, “Right Justified Result Data (DJM=1)”							
0x0026	ATDDR11	R W	See Section 14.3.2.12.1, “Left Justified Result Data (DJM=0)” and Section 14.3.2.12.2, “Right Justified Result Data (DJM=1)”							
0x0028 - 0x002F	Unimple-mented	R	0	0	0	0	0	0	0	0
		W								

= Unimplemented or Reserved

Figure 14-2. ADC12B12C Register Summary (Sheet 3 of 3)

14.3.2 Register Descriptions

This section describes in address order all the ADC12B12C registers and their individual bits.

14.3.2.1 ATD Control Register 0 (ATDCTL0)

Writes to this register will abort current conversion sequence.

Module Base + 0x0000

	7	6	5	4	3	2	1	0
R	Reserved	0	0	0	WRAP3	WRAP2	WRAP1	WRAP0
W								
Reset	0	0	0	0	1	1	1	1

= Unimplemented or Reserved

Figure 14-3. ATD Control Register 0 (ATDCTL0)

Read: Anytime

Write: Anytime, in special modes always write 0 to Reserved Bit 7.

Table 14-1. ATDCTL0 Field Descriptions

Field	Description
3-0 WRAP[3-0]	**Wrap Around Channel Select Bits** — These bits determine the channel for wrap around when doing multi-channel conversions. The coding is summarized in Table 14-2.

Table 14-2. Multi-Channel Wrap Around Coding

WRAP3	WRAP2	WRAP1	WRAP0	Multiple Channel Conversions (MULT = 1) Wraparound to AN0 after Converting
0	0	0	0	Reserved[1]
0	0	0	1	AN1
0	0	1	0	AN2
0	0	1	1	AN3
0	1	0	0	AN4
0	1	0	1	AN5
0	1	1	0	AN6
0	1	1	1	AN7
1	0	0	0	AN8
1	0	0	1	AN9
1	0	1	0	AN10
1	0	1	1	AN11
1	1	0	0	AN11
1	1	0	1	AN11
1	1	1	0	AN11
1	1	1	1	AN11

[1]If only AN0 should be converted use MULT=0.

14.3.2.2 ATD Control Register 1 (ATDCTL1)

Writes to this register will abort current conversion sequence.

Module Base + 0x0001

	7	6	5	4	3	2	1	0
R W	ETRIGSEL	SRES1	SRES0	SMP_DIS	ETRIGCH3	ETRIGCH2	ETRIGCH1	ETRIGCH0
Reset	0	0	1	0	1	1	1	1

Figure 14-4. ATD Control Register 1 (ATDCTL1)

Read: Anytime

Write: Anytime

Table 14-3. ATDCTL1 Field Descriptions

Field	Description
7 ETRIGSEL	**External Trigger Source Select** — This bit selects the external trigger source to be either one of the AD channels or one of the ETRIG3-0 inputs. See device specification for availability and connectivity of ETRIG3-0 inputs. If a particular ETRIG3-0 input option is not available, writing a 1 to ETRISEL only sets the bit but has no effect, this means that one of the AD channels (selected by ETRIGCH3-0) is configured as the source for external trigger. The coding is summarized in Table 14-5.
6–5 SRES[1:0]	**A/D Resolution Select** — These bits select the resolution of A/D conversion results. See Table 14-4 for coding.
4 SMP_DIS	**Discharge Before Sampling Bit** 0 No discharge before sampling. 1 The internal sample capacitor is discharged before sampling the channel. This adds 2 ATD clock cycles to the sampling time. This can help to detect an open circuit instead of measuring the previous sampled channel.
3–0 ETRIGCH[3:0]	**External Trigger Channel Select** — These bits select one of the AD channels or one of the ETRIG3-0 inputs as source for the external trigger. The coding is summarized in Table 14-5.

Table 14-4. A/D Resolution Coding

SRES1	SRES0	A/D Resolution
0	0	8-bit data
0	1	10-bit data
1	0	12-bit data
1	1	Reserved

Table 14-5. External Trigger Channel Select Coding

ETRIGSEL	ETRIGCH3	ETRIGCH2	ETRIGCH1	ETRIGCH0	External trigger source is
0	0	0	0	0	AN0
0	0	0	0	1	AN1
0	0	0	1	0	AN2
0	0	0	1	1	AN3
0	0	1	0	0	AN4
0	0	1	0	1	AN5
0	0	1	1	0	AN6
0	0	1	1	1	AN7
0	1	0	0	0	AN8
0	1	0	0	1	AN9
0	1	0	1	0	AN10
0	1	0	1	1	AN11
0	1	1	0	0	AN11
0	1	1	0	1	AN11
0	1	1	1	0	AN11
0	1	1	1	1	AN11
1	0	0	0	0	ETRIG0[1]
1	0	0	0	1	ETRIG1[1]
1	0	0	1	0	ETRIG2[1]
1	0	0	1	1	ETRIG3[1]
1	0	1	X	X	Reserved
1	1	X	X	X	Reserved

[1] Only if ETRIG3-0 input option is available (see device specification), else ETRISEL is ignored, that means external trigger source is still on one of the AD channels selected by ETRIGCH3-0

14.3.2.3 ATD Control Register 2 (ATDCTL2)

Writes to this register will abort current conversion sequence.

Module Base + 0x0002

	7	6	5	4	3	2	1	0
R	0	AFFC	Reserved	ETRIGLE	ETRIGP	ETRIGE	ASCIE	ACMPIE
W								
Reset	0	0	0	0	0	0	0	0

= Unimplemented or Reserved

Figure 14-5. ATD Control Register 2 (ATDCTL2)

Read: Anytime

Write: Anytime

Table 14-6. ATDCTL2 Field Descriptions

Field	Description
6 AFFC	**ATD Fast Flag Clear All** 0 ATD flag clearing done by write 1 to respective CCF[*n*] flag. 1 Changes all ATD conversion complete flags to a fast clear sequence. For compare disabled (CMPE[*n*]=0) a read access to the result register will cause the associated CCF[*n*] flag to clear automatically. For compare enabled (CMPE[*n*]=1) a write access to the result register will cause the associated CCF[*n*] flag to clear automatically.
5 Reserved	Do not alter this bit from its reset value.It is for Manufacturer use only and can change the ATD behavior.
4 ETRIGLE	**External Trigger Level/Edge Control** — This bit controls the sensitivity of the external trigger signal. See Table 14-7 for details.
3 ETRIGP	**External Trigger Polarity** — This bit controls the polarity of the external trigger signal. See Table 14-7 for details.
2 ETRIGE	**External Trigger Mode Enable** — This bit enables the external trigger on one of the AD channels or one of the ETRIG3-0 inputs as described in Table 14-5. If the external trigger source is one of the AD channels, the digital input buffer of this channel is enabled. The external trigger allows to synchronize the start of conversion with external events. 0 Disable external trigger 1 Enable external trigger
1 ASCIE	**ATD Sequence Complete Interrupt Enable** 0 ATD Sequence Complete interrupt requests are disabled. 1 ATD Sequence Complete interrupt will be requested whenever SCF=1 is set.
0 ACMPIE	**ATD Compare Interrupt Enable** — If automatic compare is enabled for conversion *n* (CMPE[*n*]=1 in ATDCMPE register) this bit enables the compare interrupt. If the CCF[*n*] flag is set (showing a successful compare for conversion *n*), the compare interrupt is triggered. 0 ATD Compare interrupt requests are disabled. 1 For the conversions in a sequence for which automatic compare is enabled (CMPE[*n*]=1), an ATD Compare Interrupt will be requested whenever any of the respective CCF flags is set.

Table 14-7. External Trigger Configurations

ETRIGLE	ETRIGP	External Trigger Sensitivity
0	0	Falling edge
0	1	Rising edge
1	0	Low level
1	1	High level

14.3.2.4 ATD Control Register 3 (ATDCTL3)

Writes to this register will abort current conversion sequence.

Module Base + 0x0003

	7	6	5	4	3	2	1	0
R W	DJM	S8C	S4C	S2C	S1C	FIFO	FRZ1	FRZ0
Reset	0	0	1	0	0	0	0	0

= Unimplemented or Reserved

Figure 14-6. ATD Control Register 3 (ATDCTL3)

Read: Anytime

Write: Anytime

Table 14-8. ATDCTL3 Field Descriptions

Field	Description
7 DJM	**Result Register Data Justification** — Result data format is always unsigned. This bit controls justification of conversion data in the result registers. 0 Left justified data in the result registers. 1 Right justified data in the result registers. Table 14-9 gives example ATD results for an input signal range between 0 and 5.12 Volts.
6–3 S8C, S4C, S2C, S1C	**Conversion Sequence Length** — These bits control the number of conversions per sequence. Table 14-10 shows all combinations. At reset, S4C is set to 1 (sequence length is 4). This is to maintain software continuity to HC12 family.
2 FIFO	**Result Register FIFO Mode** — If this bit is zero (non-FIFO mode), the A/D conversion results map into the result registers based on the conversion sequence; the result of the first conversion appears in the first result register (ATDDR0), the second result in the second result register (ATDDR1), and so on. If this bit is one (FIFO mode) the conversion counter is not reset at the beginning or end of a conversion sequence; sequential conversion results are placed in consecutive result registers. In a continuously scanning conversion sequence, the result register counter will wrap around when it reaches the end of the result register file. The conversion counter value (CC3-0 in ATDSTAT0) can be used to determine where in the result register file, the current conversion result will be placed. Aborting a conversion or starting a new conversion clears the conversion counter even if FIFO=1. So the first result of a new conversion sequence, started by writing to ATDCTL5, will always be place in the first result register (ATDDDR0). Intended usage of FIFO mode is continuos conversion (SCAN=1) or triggered conversion (ETRIG=1). Which result registers hold valid data can be tracked using the conversion complete flags. Fast flag clear mode may be useful in a particular application to track valid data. If this bit is one, automatic compare of result registers is always disabled, that is ADC12B12C will behave as if ACMPIE and all CPME[*n*] were zero. 0 Conversion results are placed in the corresponding result register up to the selected sequence length. 1 Conversion results are placed in consecutive result registers (wrap around at end).
1–0 FRZ[1:0]	**Background Debug Freeze Enable** — When debugging an application, it is useful in many cases to have the ATD pause when a breakpoint (Freeze Mode) is encountered. These 2 bits determine how the ATD will respond to a breakpoint as shown in Table 14-11. Leakage onto the storage node and comparator reference capacitors may compromise the accuracy of an immediately frozen conversion depending on the length of the freeze period.

Table 14-9. Examples of ideal decimal ATD Results

Input Signal VRL = 0 Volts VRH = 5.12 Volts	8-Bit Codes (resolution=20mV)	10-Bit Codes (resolution=5mV)	12-Bit Codes (transfer curve has 1.25mV offset) (resolution=1.25mV)
5.120 Volts	255	1023	4095
...	...	...	...
0.022	1	4	17
0.020	1	4	16
0.018	1	4	14
0.016	1	3	12
0.014	1	3	11
0.012	1	2	9
0.010	1	2	8
0.008	0	2	6
0.006	0	1	4
0.004	0	1	3
0.003	0	1	2
0.002	0	0	1
0.000	0	0	0

Table 14-10. Conversion Sequence Length Coding

S8C	S4C	S2C	S1C	Number of Conversions per Sequence
0	0	0	0	12
0	0	0	1	1
0	0	1	0	2
0	0	1	1	3
0	1	0	0	4
0	1	0	1	5
0	1	1	0	6
0	1	1	1	7
1	0	0	0	8
1	0	0	1	9
1	0	1	0	10
1	0	1	1	11
1	1	0	0	12
1	1	0	1	12
1	1	1	0	12
1	1	1	1	12

Table 14-11. ATD Behavior in Freeze Mode (Breakpoint)

FRZ1	FRZ0	Behavior in Freeze Mode
0	0	Continue conversion
0	1	Reserved
1	0	Finish current conversion, then freeze
1	1	Freeze Immediately

14.3.2.5 ATD Control Register 4 (ATDCTL4)

Writes to this register will abort current conversion sequence.

Module Base + 0x0004

	7	6	5	4	3	2	1	0
R W	SMP2	SMP1	SMP0	PRS[4:0]				
Reset	0	0	0	0	0	1	0	1

Figure 14-7. ATD Control Register 4 (ATDCTL4)

Read: Anytime

Write: Anytime

Table 14-12. ATDCTL4 Field Descriptions

Field	Description
7–5 SMP[2:0]	**Sample Time Select** — These three bits select the length of the sample time in units of ATD conversion clock cycles. Note that the ATD conversion clock period is itself a function of the prescaler value (bits PRS4-0). Table 14-13 lists the available sample time lengths.
4–0 PRS[4:0]	**ATD Clock Prescaler** — These 5 bits are the binary prescaler value PRS. The ATD conversion clock frequency is calculated as follows: $f_{ATDCLK} = \frac{f_{BUS}}{2 \times (PRS + 1)}$ Refer to Device Specification for allowed frequency range of f_{ATDCLK}.

Table 14-13. Sample Time Select

SMP2	SMP1	SMP0	Sample Time in Number of ATD Clock Cycles
0	0	0	4
0	0	1	6
0	1	0	8
0	1	1	10
1	0	0	12
1	0	1	16
1	1	0	20

Table 14-13. Sample Time Select

SMP2	SMP1	SMP0	Sample Time in Number of ATD Clock Cycles
1	1	1	24

14.3.2.6 ATD Control Register 5 (ATDCTL5)

Writes to this register will abort current conversion sequence and start a new conversion sequence. If the external trigger function is enabled (ETRIGE=1) an initial write to ATDCTL5 is required to allow starting of a conversion sequence which will then occur on each trigger event. Start of conversion means the beginning of the sampling phase.

Module Base + 0x0005

	7	6	5	4	3	2	1	0
R	0	SC	SCAN	MULT	CD	CC	CB	CA
W								
Reset	0	0	0	0	0	0	0	0

= Unimplemented or Reserved

Figure 14-8. ATD Control Register 5 (ATDCTL5)

Read: Anytime

Write: Anytime

Table 14-14. ATDCTL5 Field Descriptions

Field	Description
6 SC	**Special Channel Conversion Bit** — If this bit is set, then special channel conversion can be selected using CD, CC, CB and CA of ATDCTL5. Table 14-15 lists the coding. 0 Special channel conversions disabled 1 Special channel conversions enabled
5 SCAN	**Continuous Conversion Sequence Mode** — This bit selects whether conversion sequences are performed continuously or only once. If the external trigger function is enabled (ETRIGE=1) setting this bit has no effect, thus the external trigger always starts a single conversion sequence. 0 Single conversion sequence 1 Continuous conversion sequences (scan mode)

Table 14-14. ATDCTL5 Field Descriptions (continued)

Field	Description
4 MULT	**Multi-Channel Sample Mode** — When MULT is 0, the ATD sequence controller samples only from the specified analog input channel for an entire conversion sequence. The analog channel is selected by channel selection code (control bits CD/CC/CB/CA located in ATDCTL5). When MULT is 1, the ATD sequence controller samples across channels. The number of channels sampled is determined by the sequence length value (S8C, S4C, S2C, S1C). The first analog channel examined is determined by channel selection code (CD, CC, CB, CA control bits); subsequent channels sampled in the sequence are determined by incrementing the channel selection code or wrapping around to AN0 (channel 0). 0 Sample only one channel 1 Sample across several channels
3–0 CD, CC, CB, CA	**Analog Input Channel Select Code** — These bits select the analog input channel(s). Table 14-15 lists the coding used to select the various analog input channels. In the case of single channel conversions (MULT=0), this selection code specifies the channel to be examined. In the case of multiple channel conversions (MULT=1), this selection code specifies the first channel to be examined in the conversion sequence. Subsequent channels are determined by incrementing the channel selection code or wrapping around to AN0 (after converting the channel defined by the Wrap Around Channel Select Bits WRAP3-0 in ATDCTL0). When starting with a channel number higher than the one defined by WRAP3-0 the first wrap around will be AN11 to AN0.

Table 14-15. Analog Input Channel Select Coding

SC	CD	CC	CB	CA	Analog Input Channel
0	0	0	0	0	AN0
	0	0	0	1	AN1
	0	0	1	0	AN2
	0	0	1	1	AN3
	0	1	0	0	AN4
	0	1	0	1	AN5
	0	1	1	0	AN6
	0	1	1	1	AN7
	1	0	0	0	AN8
	1	0	0	1	AN9
	1	0	1	0	AN10
	1	0	1	1	AN11
	1	1	0	0	AN11
	1	1	0	1	AN11
	1	1	1	0	AN11
	1	1	1	1	AN11

Table 14-15. Analog Input Channel Select Coding

SC	CD	CC	CB	CA	Analog Input Channel
1	0	0	0	0	Internal_6,
	0	0	0	1	Internal_7
	0	0	1	0	Internal_0
	0	0	1	1	Internal_1
	0	1	0	0	VRH
	0	1	0	1	VRL
	0	1	1	0	(VRH+VRL) / 2
	0	1	1	1	Reserved
	1	0	0	0	Internal_2
	1	0	0	1	Internal_3
	1	0	1	0	Internal_4
	1	0	1	1	Internal_5
	1	1	X	X	Reserved

14.3.2.7 ATD Status Register 0 (ATDSTAT0)

This register contains the Sequence Complete Flag, overrun flags for external trigger and FIFO mode, and the conversion counter.

Module Base + 0x0006

	7	6	5	4	3	2	1	0
R	SCF	0	ETORF	FIFOR	CC3	CC2	CC1	CC0
W								
Reset	0	0	0	0	0	0	0	0

= Unimplemented or Reserved

Figure 14-9. ATD Status Register 0 (ATDSTAT0)

Read: Anytime

Write: Anytime (No effect on (CC3, CC2, CC1, CC0))

Table 14-16. ATDSTAT0 Field Descriptions

Field	Description
7 SCF	**Sequence Complete Flag** — This flag is set upon completion of a conversion sequence. If conversion sequences are continuously performed (SCAN=1), the flag is set after each one is completed. This flag is cleared when one of the following occurs: A) Write “1” to SCF B) Write to ATDCTL5 (a new conversion sequence is started) C) If AFFC=1 and a result register is read 0 Conversion sequence not completed 1 Conversion sequence has completed
5 ETORF	**External Trigger Overrun Flag** — While in edge sensitive mode (ETRIGLE=0), if additional active edges are detected while a conversion sequence is in process the overrun flag is set. This flag is cleared when one of the following occurs: A) Write “1” to ETORF B) Write to ATDCTL0,1,2,3,4, ATDCMPE or ATDCMPHT (a conversion sequence is aborted) C) Write to ATDCTL5 (a new conversion sequence is started) 0 No External trigger overrun error has occurred 1 External trigger overrun error has occurred
4 FIFOR	**Result Register Overrun Flag** — This bit indicates that a result register has been written to before its associated conversion complete flag (CCF) has been cleared. This flag is most useful when using the FIFO mode because the flag potentially indicates that result registers are out of sync with the input channels. However, it is also practical for non-FIFO modes, and indicates that a result register has been overwritten before it has been read (i.e. the old data has been lost). This flag is cleared when one of the following occurs: A) Write “1” to FIFOR B) Write to ATDCTL0,1,2,3,4, ATDCMPE or ATDCMPHT (a conversion sequence is aborted) C) Write to ATDCTL5 (a new conversion sequence is started) 0 No overrun has occurred 1 Overrun condition exists (result register has been written while associated CCFx flag was still set)

Table 14-16. ATDSTAT0 Field Descriptions (continued)

Field	Description
3–0 CC[3:0]	**Conversion Counter** — These 4 read-only bits are the binary value of the conversion counter. The conversion counter points to the result register that will receive the result of the current conversion. E.g. CC3=0, CC2=1, CC1=1, CC0=0 indicates that the result of the current conversion will be in ATD Result Register 6. If in non-FIFO mode (FIFO=0) the conversion counter is initialized to zero at the beginning and end of the conversion sequence. If in FIFO mode (FIFO=1) the register counter is not initialized. The conversion counter wraps around when its maximum value is reached. Aborting a conversion or starting a new conversion clears the conversion counter even if FIFO=1.

14.3.2.8 ATD Compare Enable Register (ATDCMPE)

Writes to this register will abort current conversion sequence.

Read: Anytime

Write: Anytime

Module Base + 0x0008

	15	14	13		11	10	9	8	7	6	5	4	3	2	1	0
R	0	0	0	0	CMPE[11:0]											
W																
Reset	0	0	0	0	0	0	0	0	0	0	0	0	0	0	0	0

= Unimplemented or Reserved

Figure 14-10. ATD Compare Enable Register (ATDCMPE)

Table 14-17. ATDCMPE Field Descriptions

Field	Description
11–0 CMPE[11:0]	**Compare Enable for Conversion Number *n* (*n*= 11, 10, 9, 8, 7, 6, 5, 4, 3, 2, 1, 0) of a Sequence (*n conversion number, NOT channel number!)*** — These bits enable automatic compare of conversion results individually for conversions of a sequence. The sense of each comparison is determined by the CMPHT[*n*] bit in the ATDCMPHT register. For each conversion number with CMPE[*n*]=1 do the following: 1) Write compare value to ATDDR*n* result register 2) Write compare operator with CMPHT[*n*] in ATDCPMHT register CCF[*n*] in ATDSTAT2 register will flag individual success of any comparison. 0 No automatic compare 1 Automatic compare of results for conversion *n* of a sequence is enabled.

14.3.2.9 ATD Status Register 2 (ATDSTAT2)

This read-only register contains the Conversion Complete Flags CCF[11:0].

Module Base + 0x000A

	15	14	13	12	11	10	9	8	7	6	5	4	3	2	1	0
R	0	0	0	0	CCF[11:0]											
W																
Reset	0	0	0	0	0	0	0	0	0	0	0	0	0	0	0	0

= Unimplemented or Reserved

Figure 14-11. ATD Status Register 2 (ATDSTAT2)

Read: Anytime

Write: Anytime (for details see Table 14-18 below)

Table 14-18. ATDSTAT2 Field Descriptions

Field	Description
11–0 CCF[11:0]	**Conversion Complete Flag *n* (*n*= 11, 10, 9, 8, 7, 6, 5, 4, 3, 2, 1, 0) (*n conversion number, NOT channel number!)***— A conversion complete flag is set at the end of each conversion in a sequence. The flags are associated with the conversion position in a sequence (and also the result register number). Therefore in non-fifo mode, CCF[4] is set when the fifth conversion in a sequence is complete and the result is available in result register ATDDR4; CCF[5] is set when the sixth conversion in a sequence is complete and the result is available in ATDDR5, and so forth. If automatic compare of conversion results is enabled (CMPE[*n*]=1 in ATDCMPE), the conversion complete flag is only set if comparison with ATDDR*n* is true. If ACMPIE=1 a compare interrupt will be requested. In this case, as the ATDDR*n* result register is used to hold the compare value, the result will not be stored there at the end of the conversion but is lost. A flag CCF[*n*] is cleared when one of the following occurs: A) Write to ATDCTL5 (a new conversion sequence is started) B) If AFFC=0, write “1” to CCF[*n*] C) If AFFC=1 and CMPE[*n*]=0, read of result register ATDDR*n* D) If AFFC=1 and CMPE[*n*]=1, write to result register ATDDR*n* In case of a concurrent set and clear on CCF[*n*]: The clearing by method A) will overwrite the set. The clearing by methods B) or C) or D) will be overwritten by the set. 0 Conversion number *n* not completed or successfully compared 1 If (CMPE[*n*]=0): Conversion number *n* has completed. Result is ready in ATDDR*n*. If (CMPE[*n*]=1): Compare for conversion result number *n* with compare value in ATDDR*n*, using compare operator CMPGT[*n*] is true. (No result available in ATDDR*n*)

14.3.2.10 ATD Input Enable Register (ATDDIEN)

Module Base + 0x000C

	15	14	13	12	11	10	9	8	7	6	5	4	3	2	1	0
R	1	1	1	1	IEN[11:0]											
W																
Reset	1	1	1	1	0	0	0	0	0	0	0	0	0	0	0	0

= Unimplemented or Reserved

Figure 14-12. ATD Input Enable Register (ATDDIEN)

Read: Anytime

Write: Anytime

Table 14-19. ATDDIEN Field Descriptions

Field	Description
11–0 IEN[11:0]	**ATD Digital Input Enable on channel *x* (*x*= 11, 10, 9, 8, 7, 6, 5, 4, 3, 2, 1, 0)** — This bit controls the digital input buffer from the analog input pin (AN*x*) to the digital data register. 0 Disable digital input buffer to AN*x* pin 1 Enable digital input buffer on AN*x* pin. **Note:** Setting this bit will enable the corresponding digital input buffer continuously. If this bit is set while simultaneously using it as an analog port, there is potentially increased power consumption because the digital input buffer maybe in the linear region.

14.3.2.11 ATD Compare Higher Than Register (ATDCMPHT)

Writes to this register will abort current conversion sequence.

Read: Anytime

Write: Anytime

Module Base + 0x000E

	15	14	13	12	11	10	9	8	7	6	5	4	3	2	1	0
R	0	0	0	0	CMPHT[11:0]											
W																
Reset	0	0	0	0	0	0	0	0	0	0	0	0	0	0	0	0

= Unimplemented or Reserved

Figure 14-13. ATD Compare Higher Than Register (ATDCMPHT)

Table 14-20. ATDCMPHT Field Descriptions

Field	Description
11–0 CMPHT[11:0]	**Compare Operation Higher Than Enable for conversion number *n* (*n*= 11, 10, 9, 8, 7, 6, 5, 4, 3, 2, 1, 0) of a Sequence (*n conversion number, NOT channel number!)*** — This bit selects the operator for comparison of conversion results. 0 If result of conversion *n* is **lower or same than** compare value in ATDDR*n*, this is flagged in ATDSTAT2 1 If result of conversion *n* is **higher than** compare value in ATDDR*n*, this is flagged in ATDSTAT2

14.3.2.12 ATD Conversion Result Registers (ATDDR*n*)

The A/D conversion results are stored in 12 result registers. Results are always in unsigned data representation. Left and right justification is selected using the DJM control bit in ATDCTL3.

If automatic compare of conversions results is enabled (CMPE[*n*]=1 in ATDCMPE), these registers must be written with the compare values in left or right justified format depending on the actual value of the DJM bit. In this case, as the ATDDR*n* register is used to hold the compare value, the result will not be stored there at the end of the conversion but is lost.

Attention, n is the conversion number, NOT the channel number!

Read: Anytime

Write: Anytime

NOTE

For conversions not using automatic compare, results are stored in the result registers after each conversion. In this case avoid writing to ATDDRn except for initial values, because an A/D result might be overwritten.

14.3.2.12.1 Left Justified Result Data (DJM=0)

Module Base +
0x0010 = ATDDR0, 0x0012 = ATDDR1, 0x0014 = ATDDR2, 0x0016 = ATDDR3
0x0018 = ATDDR4, 0x001A = ATDDR5, 0x001C = ATDDR6, 0x001E = ATDDR7
0x0020 = ATDDR8, 0x0022 = ATDDR9, 0x0024 = ATDDR10, 0x0026 = ATDDR11

	15	14	13	12	11	10	9	8	7	6	5	4	3	2	1	0
R	Result-Bit[11:0]												0	0	0	0
W																
Reset	0	0	0	0	0	0	0	0	0	0	0	0	0	0	0	0

= Unimplemented or Reserved

Figure 14-14. Left justified ATD conversion result register (ATDDR*n*)

Table 14-21 shows how depending on the A/D resolution the conversion result is transferred to the ATD result registers for left justified data. Compare is always done using all 12 bits of both the conversion result and the compare value in ATDDRn.

Table 14-21. Conversion result mapping to ATDDRn

A/D resolution	DJM	conversion result mapping to ATDDR*n*
8-bit data	0	Result-Bit[11:4] = conversion result, Result-Bit[3:0]=0000
10-bit data	0	Result-Bit[11:2] = conversion result, Result-Bit[1:0]=00
12-bit data	0	Result-Bit[11:0] = result

14.3.2.12.2 Right Justified Result Data (DJM=1)

Module Base +
0x0010 = ATDDR0, 0x0012 = ATDDR1, 0x0014 = ATDDR2, 0x0016 = ATDDR3
0x0018 = ATDDR4, 0x001A = ATDDR5, 0x001C = ATDDR6, 0x001E = ATDDR7
0x0020 = ATDDR8, 0x0022 = ATDDR9, 0x0024 = ATDDR10, 0x0026 = ATDDR11

	15	14	13	12	11	10	9	8	7	6	5	4	3	2	1	0
R	0	0	0	0	Result-Bit[11:0]											
W																
Reset	0	0	0	0	0	0	0	0	0	0	0	0	0	0	0	0

= Unimplemented or Reserved

Figure 14-15. Right justified ATD conversion result register (ATDDR*n*)

Table 14-22 shows how depending on the A/D resolution the conversion result is transferred to the ATD result registers for right justified data. Compare is always done using all 12 bits of both the conversion result and the compare value in ATDDRn.

Table 14-22. Conversion result mapping to ATDDRn

A/D resolution	DJM	conversion result mapping to ATDDR*n*
8-bit data	1	Result-Bit[11:8]=0000, Result-Bit[7:0] = conversion result
10-bit data	1	Result-Bit[11:10]=00, Result-Bit[9:0] = conversion result
12-bit data	1	Result-Bit[11:0] = result

14.4 Functional Description

The ADC12B12C consists of an analog sub-block and a digital sub-block.

14.4.1 Analog Sub-Block

The analog sub-block contains all analog electronics required to perform a single conversion. Separate power supplies VDDA and VSSA allow to isolate noise of other MCU circuitry from the analog sub-block.

14.4.1.1 Sample and Hold Machine

The Sample and Hold Machine controls the storage and charge of the sample capacitor to the voltage level of the analog signal at the selected ADC input channel.

During the sample process the analog input connects directly to the storage node.

The input analog signals are unipolar and must be within the potential range of VSSA to VDDA.

During the hold process the analog input is disconnected from the storage node.

14.4.1.2 Analog Input Multiplexer

The analog input multiplexer connects one of the 12 external analog input channels to the sample and hold machine.

14.4.1.3 Analog-to-Digital (A/D) Machine

The A/D Machine performs analog to digital conversions. The resolution is program selectable to be either 8 or 10 or 12 bits. The A/D machine uses a successive approximation architecture. It functions by comparing the sampled and stored analog voltage with a series of binary coded discrete voltages. By following a binary search algorithm, the A/D machine identifies the discrete voltage that is nearest to the sampled and stored voltage.

When not converting the A/D machine is automatically powered down.

Only analog input signals within the potential range of VRL to VRH (A/D reference potentials) will result in a non-railed digital output code.

14.4.2 Digital Sub-Block

This subsection describes some of the digital features in more detail. See Section 14.3.2, “Register Descriptions” for all details.

14.4.2.1 External Trigger Input

The external trigger feature allows the user to synchronize ATD conversions to an external event rather than relying only on software to trigger the ATD module when a conversions is about to take place. The external trigger signal (out of reset ATD channel 11, configurable in ATDCTL1) is programmable to be

edge or level sensitive with polarity control. Table 14-23 gives a brief description of the different combinations of control bits and their effect on the external trigger function.

In order to avoid maybe false trigger events please enable the external digital input via ATDDIEN register first and in the following enable the external trigger mode by bit ETRIGE.

Table 14-23. External Trigger Control Bits

ETRIGLE	ETRIGP	ETRIGE	SCAN	Description
X	X	0	0	Ignores external trigger. Performs one conversion sequence and stops.
X	X	0	1	Ignores external trigger. Performs continuous conversion sequences.
0	0	1	X	Trigger falling edge sensitive. Performs one conversion sequence per trigger.
0	1	1	X	Trigger rising edge sensitive. Performs one conversion sequence per trigger.
1	0	1	X	Trigger low level sensitive. Performs continuous conversions while trigger level is active.
1	1	1	X	Trigger high level sensitive. Performs continuous conversions while trigger level is active.

In either level or edge sensitive modes, the first conversion begins when the trigger is received.

Once ETRIGE is enabled a conversion must be triggered externally after writing to ATDCTL5 register.

During a conversion in edge sensitive mode, if additional trigger events are detected the overrun error flag ETORF is set.

If level sensitive mode is active and the external trigger de-asserts and later asserts again during a conversion sequence, this does not constitute an overrun. Therefore, the flag is not set. If the trigger is left active in level sensitive mode when a sequence is about to complete, another sequence will be triggered immediately.

14.4.2.2 General-Purpose Digital Port Operation

Each ATD input pin can be switched between analog or digital input functionality. An analog multiplexer makes each ATD input pin selected as analog input available to the A/D converter.

The pad of the ATD input pin is always connected to the analog input channel of the analog mulitplexer.

Each pad input signal is buffered to the digital port register.

This buffer can be turned on or off with the ATDDIEN register for each ATD input pin.
This is important so that the buffer does not draw excess current when an ATD input pin is selected as analog input to the ADC12B12C.

14.5 Resets

At reset the ADC12B12C is in a power down state. The reset state of each individual bit is listed within the Register Description section (see Section 14.3.2, “Register Descriptions”) which details the registers and their bit-field.

14.6 Interrupts

The interrupts requested by the ADC12B12C are listed in Table 14-24. Refer to MCU specification for related vector address and priority.

Table 14-24. ATD Interrupt Vectors

Interrupt Source	CCR Mask	Local Enable
Sequence Complete Interrupt	I bit	ASCIE in ATDCTL2
Compare Interrupt	I bit	ACMPIE in ATDCTL2

See Section 14.3.2, “Register Descriptions” for further details.

Chapter 15
Analog-to-Digital Converter (ADC10B16CV2)

Revision History

Version Number	Revision Date	Effective Date	Author	Description of Changes
V02.00	18 June 2009	18 June 2009		Initial version copied 12 channel block guide
V02.01	09 Feb 2010	09 Feb 2010		Updated Table 15-15 Analog Input Channel Select Coding - description of internal channels. Updated register ATDDR (left/right justified result) description in section 15.3.2.12.1/15-527 and 15.3.2.12.2/15-528 and added Table 15-21 to improve feature description. Fixed typo in Table 15-9 - conversion result for 3mV and 10bit resolution
V02.03	26 Feb 2010	26 Feb 2010		Corrected Table 15-15 Analog Input Channel Select Coding - description of internal channels.
V02.04	26 Mar 2010	16 Mar 2010		Corrected typo: Reset value of ATDDIEN register
V02.05	14 Apr 2010	14 Apr 2010		Corrected typos to be in-line with SoC level pin naming conventions for VDDA, VSSA, VRL and VRH.
V02.06	25 Aug 2010	25 Aug 2010		Removed feature of conversion during STOP and general wording clean up done in Section 15.4, “Functional Description
v02.07	09 Sep 2010	09 Sep 2010		Update of internal only information.
V02.08	11 Feb 2011	11 Feb 2011		Connectivity Information regarding internal channel_6 added to Table 15-15.
V02.09	29 Mar 2011	29 Mar 2011		Fixed typo in bit description field Table 15-14 for bits CD, CC, CB, CA. Last sentence contained a wrong highest channel number (it is not AN7 to AN0 instead it is AN15 to AN0).
V02.10	22. Jun 2012	22. Jun 2012		Updated register wirte access information in section 15.3.2.9/15-525
V02.11	29. Jun 2012	29. Jun 2012		Removed IP name in block diagram Figure 15-1
V02.12	02 Oct 2012	02 Oct 2012		Added user information to avoid maybe false external trigger events when enabling the external trigger mode (Section 15.4.2.1, “External Trigger Input).

15.1 Introduction

The ADC10B16C is a 16-channel, 10-bit, multiplexed input successive approximation analog-to-digital converter. Refer to device electrical specifications for ATD accuracy.

15.1.1 Features

- 8-, 10-bit resolution.
- Automatic return to low power after conversion sequence
- Automatic compare with interrupt for higher than or less/equal than programmable value
- Programmable sample time.
- Left/right justified result data.
- External trigger control.
- Sequence complete interrupt.
- Analog input multiplexer for 8 analog input channels.
- Special conversions for VRH, VRL, (VRL+VRH)/2.
- 1-to-16 conversion sequence lengths.
- Continuous conversion mode.
- Multiple channel scans.
- Configurable external trigger functionality on any AD channel or any of four additional trigger inputs. The four additional trigger inputs can be chip external or internal. Refer to device specification for availability and connectivity.
- Configurable location for channel wrap around (when converting multiple channels in a sequence).

15.1.2 Modes of Operation

15.1.2.1 Conversion Modes

There is software programmable selection between performing **single** or **continuous conversion** on a **single channel** or **multiple channels**.

15.1.2.2 MCU Operating Modes

- **Stop Mode**
  Entering Stop Mode aborts any conversion sequence in progress and if a sequence was aborted restarts it after exiting stop mode. This has the same effect/consequences as starting a conversion sequence with write to ATDCTL5. So after exiting from stop mode with a previously aborted sequence all flags are cleared etc.
- **Wait Mode**
  ADC10B16C behaves same in Run and Wait Mode. For reduced power consumption continuous conversions should be aborted before entering Wait mode.
- **Freeze Mode**
  In Freeze Mode the ADC10B16C will either continue or finish or stop converting according to the FRZ1 and FRZ0 bits. This is useful for debugging and emulation.

15.1.3 Block Diagram

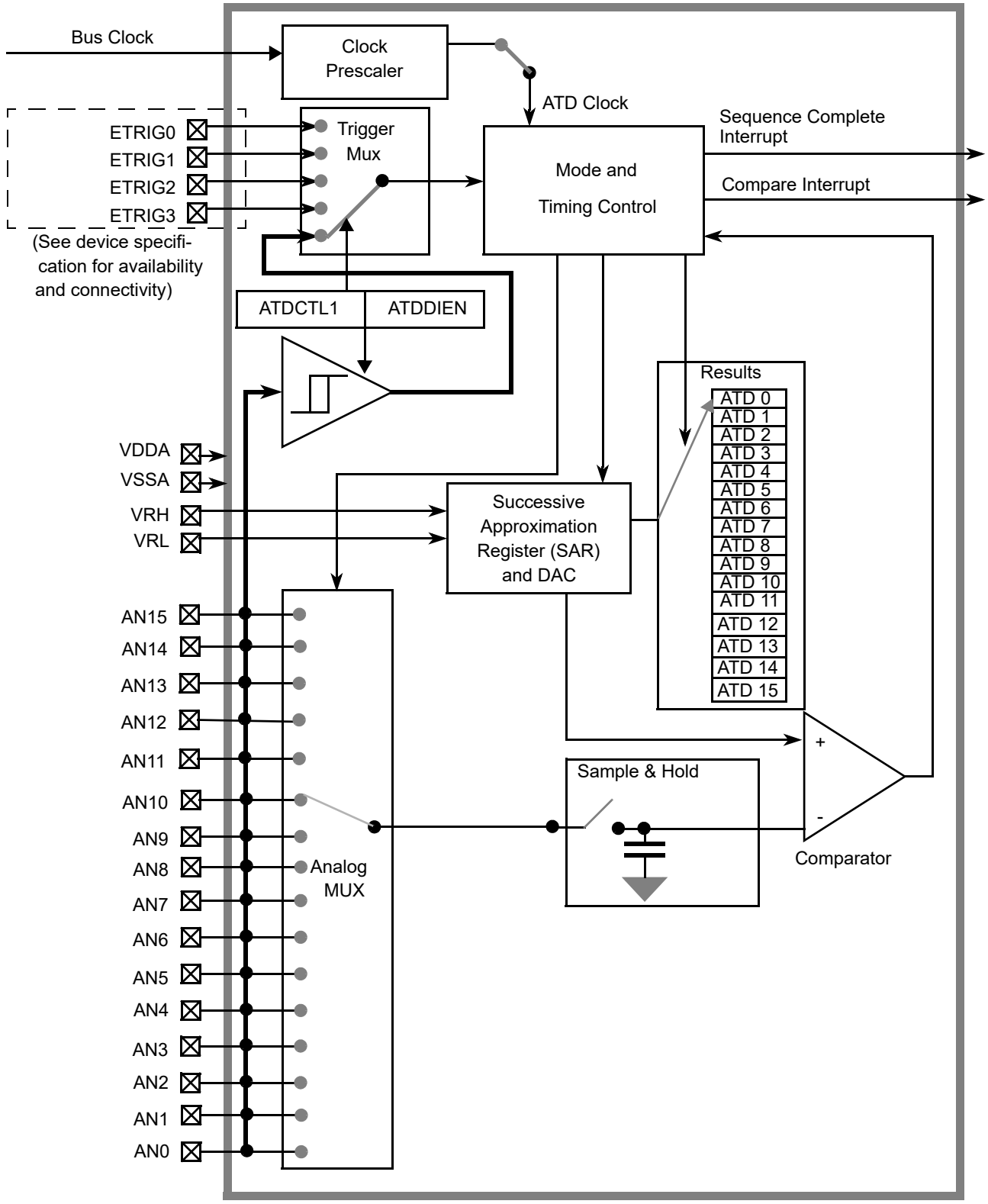

Figure 15-1. ADC10B16C Block Diagram

15.2 Signal Description

This section lists all inputs to the ADC10B16C block.

15.2.1 Detailed Signal Descriptions

15.2.1.1 AN*x* (*x* = 15, 14, 13, 12, 11, 10, 9, 8, 7, 6, 5, 4, 3, 2, 1, 0)

This pin serves as the analog input Channel *x*. It can also be configured as digital port or external trigger for the ATD conversion.

15.2.1.2 ETRIG3, ETRIG2, ETRIG1, ETRIG0

These inputs can be configured to serve as an external trigger for the ATD conversion.

Refer to device specification for availability and connectivity of these inputs!

15.2.1.3 VRH, VRL

VRH is the high reference voltage, VRL is the low reference voltage for ATD conversion.

15.2.1.4 VDDA, VSSA

These pins are the power supplies for the analog circuitry of the ADC10B16C block.

15.3 Memory Map and Register Definition

This section provides a detailed description of all registers accessible in the ADC10B16C.

15.3.1 Module Memory Map

Figure 15-2 gives an overview on all ADC10B16C registers.

NOTE

Register Address = Base Address + Address Offset, where the Base Address is defined at the MCU level and the Address Offset is defined at the module level.

Address	Name		Bit 7	6	5	4	3	2	1	Bit 0
0x0000	ATDCTL0	R W	Reserved	0	0	0	WRAP3	WRAP2	WRAP1	WRAP0
0x0001	ATDCTL1	R W	ETRIGSEL	SRES1	SRES0	SMP_DIS	ETRIGCH3	ETRIGCH2	ETRIGCH1	ETRIGCH0
0x0002	ATDCTL2	R W	0	AFFC	Reserved	ETRIGLE	ETRIGP	ETRIGE	ASCIE	ACMPIE

= Unimplemented or Reserved

Figure 15-2. ADC10B16C Register Summary (Sheet 1 of 3)

Address	Name		Bit 7	6	5	4	3	2	1	Bit 0
0x0003	ATDCTL3	R	DJM	S8C	S4C	S2C	S1C	FIFO	FRZ1	FRZ0
		W								
0x0004	ATDCTL4	R	SMP2	SMP1	SMP0	PRS[4:0]				
		W								
0x0005	ATDCTL5	R	0	SC	SCAN	MULT	CD	CC	CB	CA
		W								
0x0006	ATDSTAT0	R	SCF	0	ETORF	FIFOR	CC3	CC2	CC1	CC0
		W								
0x0007	Unimple-mented	R	0	0	0	0	0	0	0	0
		W								
0x0008	ATDCMPEH	R	CMPE[15:8]							
		W								
0x0009	ATDCMPEL	R	CMPE[7:0]							
		W								
0x000A	ATDSTAT2H	R	CCF[15:8]							
		W								
0x000B	ATDSTAT2L	R	CCF[7:0]							
		W								
0x000C	ATDDIENH	R	IEN[15:8]							
		W								
0x000D	ATDDIENL	R	IEN[7:0]							
		W								
0x000E	ATDCMPHTH	R	CMPHT[15:8]							
		W								
0x000F	ATDCMPHTL	R	CMPHT[7:0]							
		W								
0x0010	ATDDR0	R	See Section 15.3.2.12.1, “Left Justified Result Data (DJM=0)” and Section 15.3.2.12.2, “Right Justified Result Data (DJM=1)”							
		W								
0x0012	ATDDR1	R	See Section 15.3.2.12.1, “Left Justified Result Data (DJM=0)” and Section 15.3.2.12.2, “Right Justified Result Data (DJM=1)”							
		W								
0x0014	ATDDR2	R	See Section 15.3.2.12.1, “Left Justified Result Data (DJM=0)” and Section 15.3.2.12.2, “Right Justified Result Data (DJM=1)”							
		W								
0x0016	ATDDR3	R	See Section 15.3.2.12.1, “Left Justified Result Data (DJM=0)” and Section 15.3.2.12.2, “Right Justified Result Data (DJM=1)”							
		W								
0x0018	ATDDR4	R	See Section 15.3.2.12.1, “Left Justified Result Data (DJM=0)” and Section 15.3.2.12.2, “Right Justified Result Data (DJM=1)”							
		W								
0x001A	ATDDR5	R	See Section 15.3.2.12.1, “Left Justified Result Data (DJM=0)” and Section 15.3.2.12.2, “Right Justified Result Data (DJM=1)”							
		W								
0x001C	ATDDR6	R	See Section 15.3.2.12.1, “Left Justified Result Data (DJM=0)” and Section 15.3.2.12.2, “Right Justified Result Data (DJM=1)”							
		W								
0x001E	ATDDR7	R	See Section 15.3.2.12.1, “Left Justified Result Data (DJM=0)” and Section 15.3.2.12.2, “Right Justified Result Data (DJM=1)”							
		W								
0x0020	ATDDR8	R	See Section 15.3.2.12.1, “Left Justified Result Data (DJM=0)” and Section 15.3.2.12.2, “Right Justified Result Data (DJM=1)”							
		W								
0x0022	ATDDR9	R	See Section 15.3.2.12.1, “Left Justified Result Data (DJM=0)” and Section 15.3.2.12.2, “Right Justified Result Data (DJM=1)”							
		W								

= Unimplemented or Reserved

Figure 15-2. ADC10B16C Register Summary (Sheet 2 of 3)

Address	Name		Bit 7	6	5	4	3	2	1	Bit 0
0x0024	ATDDR10	R W	See Section 15.3.2.12.1, “Left Justified Result Data (DJM=0)” and Section 15.3.2.12.2, “Right Justified Result Data (DJM=1)”							
0x0026	ATDDR11	R W	See Section 15.3.2.12.1, “Left Justified Result Data (DJM=0)” and Section 15.3.2.12.2, “Right Justified Result Data (DJM=1)”							
0x0028	ATDDR12	R W	See Section 15.3.2.12.1, “Left Justified Result Data (DJM=0)” and Section 15.3.2.12.2, “Right Justified Result Data (DJM=1)”							
0x002A	ATDDR13	R W	See Section 15.3.2.12.1, “Left Justified Result Data (DJM=0)” and Section 15.3.2.12.2, “Right Justified Result Data (DJM=1)”							
0x002C	ATDDR14	R W	See Section 15.3.2.12.1, “Left Justified Result Data (DJM=0)” and Section 15.3.2.12.2, “Right Justified Result Data (DJM=1)”							
0x002E	ATDDR15	R W	See Section 15.3.2.12.1, “Left Justified Result Data (DJM=0)” and Section 15.3.2.12.2, “Right Justified Result Data (DJM=1)”							
		W								

= Unimplemented or Reserved

Figure 15-2. ADC10B16C Register Summary (Sheet 3 of 3)

15.3.2 Register Descriptions

This section describes in address order all the ADC10B16C registers and their individual bits.

15.3.2.1 ATD Control Register 0 (ATDCTL0)

Writes to this register will abort current conversion sequence.

Module Base + 0x0000

	7	6	5	4	3	2	1	0
R	Reserved	0	0	0	WRAP3	WRAP2	WRAP1	WRAP0
W								
Reset	0	0	0	0	1	1	1	1

= Unimplemented or Reserved

Figure 15-3. ATD Control Register 0 (ATDCTL0)

Read: Anytime

Write: Anytime, in special modes always write 0 to Reserved Bit 7.

Table 15-1. ATDCTL0 Field Descriptions

Field	Description
3-0 WRAP[3-0]	**Wrap Around Channel Select Bits** — These bits determine the channel for wrap around when doing multi-channel conversions. The coding is summarized in Table 15-2.

Table 15-2. Multi-Channel Wrap Around Coding

WRAP3	WRAP2	WRAP1	WRAP0	Multiple Channel Conversions (MULT = 1) Wraparound to AN0 after Converting
0	0	0	0	Reserved[1]
0	0	0	1	AN1
0	0	1	0	AN2
0	0	1	1	AN3
0	1	0	0	AN4
0	1	0	1	AN5
0	1	1	0	AN6
0	1	1	1	AN7
1	0	0	0	AN8
1	0	0	1	AN9
1	0	1	0	AN10
1	0	1	1	AN11
1	1	0	0	AN12
1	1	0	1	AN13
1	1	1	0	AN14
1	1	1	1	AN15

[1]If only AN0 should be converted use MULT=0.

15.3.2.2 ATD Control Register 1 (ATDCTL1)

Writes to this register will abort current conversion sequence.

Module Base + 0x0001

	7	6	5	4	3	2	1	0
R W	ETRIGSEL	SRES1	SRES0	SMP_DIS	ETRIGCH3	ETRIGCH2	ETRIGCH1	ETRIGCH0
Reset	0	0	1	0	1	1	1	1

Figure 15-4. ATD Control Register 1 (ATDCTL1)

Read: Anytime

Write: Anytime

Table 15-3. ATDCTL1 Field Descriptions

Field	Description
7 ETRIGSEL	**External Trigger Source Select** — This bit selects the external trigger source to be either one of the AD channels or one of the ETRIG3-0 inputs. See device specification for availability and connectivity of ETRIG3-0 inputs. If a particular ETRIG3-0 input option is not available, writing a 1 to ETRISEL only sets the bit but has no effect, this means that one of the AD channels (selected by ETRIGCH3-0) is configured as the source for external trigger. The coding is summarized in Table 15-5.
6–5 SRES[1:0]	**A/D Resolution Select** — These bits select the resolution of A/D conversion results. See Table 15-4 for coding.
4 SMP_DIS	**Discharge Before Sampling Bit** 0 No discharge before sampling. 1 The internal sample capacitor is discharged before sampling the channel. This adds 2 ATD clock cycles to the sampling time. This can help to detect an open circuit instead of measuring the previous sampled channel.
3–0 ETRIGCH[3:0]	**External Trigger Channel Select** — These bits select one of the AD channels or one of the ETRIG3-0 inputs as source for the external trigger. The coding is summarized in Table 15-5.

Table 15-4. A/D Resolution Coding

SRES1	SRES0	A/D Resolution
0	0	8-bit data
0	1	10-bit data
1	0	Reserved
1	1	Reserved

Table 15-5. External Trigger Channel Select Coding

ETRIGSEL	ETRIGCH3	ETRIGCH2	ETRIGCH1	ETRIGCH0	External trigger source is
0	0	0	0	0	AN0
0	0	0	0	1	AN1
0	0	0	1	0	AN2
0	0	0	1	1	AN3
0	0	1	0	0	AN4
0	0	1	0	1	AN5
0	0	1	1	0	AN6
0	0	1	1	1	AN7
0	1	0	0	0	AN8
0	1	0	0	1	AN9
0	1	0	1	0	AN10
0	1	0	1	1	AN11
0	1	1	0	0	AN12
0	1	1	0	1	AN13
0	1	1	1	0	AN14
0	1	1	1	1	AN15
1	0	0	0	0	ETRIG0[1]
1	0	0	0	1	ETRIG1[1]
1	0	0	1	0	ETRIG2[1]
1	0	0	1	1	ETRIG3[1]
1	0	1	X	X	Reserved
1	1	X	X	X	Reserved

[1] Only if ETRIG3-0 input option is available (see device specification), else ETRISEL is ignored, that means external trigger source is still on one of the AD channels selected by ETRIGCH3-0

15.3.2.3 ATD Control Register 2 (ATDCTL2)

Writes to this register will abort current conversion sequence.

Module Base + 0x0002

	7	6	5	4	3	2	1	0
R	0	AFFC	Reserved	ETRIGLE	ETRIGP	ETRIGE	ASCIE	ACMPIE
W								
Reset	0	0	0	0	0	0	0	0

= Unimplemented or Reserved

Figure 15-5. ATD Control Register 2 (ATDCTL2)

Read: Anytime

Write: Anytime

Table 15-6. ATDCTL2 Field Descriptions

Field	Description
6 AFFC	**ATD Fast Flag Clear All** 0 ATD flag clearing done by write 1 to respective CCF[*n*] flag. 1 Changes all ATD conversion complete flags to a fast clear sequence. For compare disabled (CMPE[*n*]=0) a read access to the result register will cause the associated CCF[*n*] flag to clear automatically. For compare enabled (CMPE[*n*]=1) a write access to the result register will cause the associated CCF[*n*] flag to clear automatically.
5 Reserved	Do not alter this bit from its reset value.It is for Manufacturer use only and can change the ATD behavior.
4 ETRIGLE	**External Trigger Level/Edge Control** — This bit controls the sensitivity of the external trigger signal. See Table 15-7 for details.
3 ETRIGP	**External Trigger Polarity** — This bit controls the polarity of the external trigger signal. See Table 15-7 for details.
2 ETRIGE	**External Trigger Mode Enable** — This bit enables the external trigger on one of the AD channels or one of the ETRIG3-0 inputs as described in Table 15-5. If the external trigger source is one of the AD channels, the digital input buffer of this channel is enabled. The external trigger allows to synchronize the start of conversion with external events. 0 Disable external trigger 1 Enable external trigger
1 ASCIE	**ATD Sequence Complete Interrupt Enable** 0 ATD Sequence Complete interrupt requests are disabled. 1 ATD Sequence Complete interrupt will be requested whenever SCF=1 is set.
0 ACMPIE	**ATD Compare Interrupt Enable** — If automatic compare is enabled for conversion *n* (CMPE[*n*]=1 in ATDCMPE register) this bit enables the compare interrupt. If the CCF[*n*] flag is set (showing a successful compare for conversion *n*), the compare interrupt is triggered. 0 ATD Compare interrupt requests are disabled. 1 For the conversions in a sequence for which automatic compare is enabled (CMPE[*n*]=1), an ATD Compare Interrupt will be requested whenever any of the respective CCF flags is set.

Table 15-7. External Trigger Configurations

ETRIGLE	ETRIGP	External Trigger Sensitivity
0	0	Falling edge
0	1	Rising edge
1	0	Low level
1	1	High level

15.3.2.4 ATD Control Register 3 (ATDCTL3)

Writes to this register will abort current conversion sequence.

Module Base + 0x0003

	7	6	5	4	3	2	1	0
R W	DJM	S8C	S4C	S2C	S1C	FIFO	FRZ1	FRZ0
Reset	0	0	1	0	0	0	0	0

= Unimplemented or Reserved

Figure 15-6. ATD Control Register 3 (ATDCTL3)

Read: Anytime

Write: Anytime

Table 15-8. ATDCTL3 Field Descriptions

Field	Description
7 DJM	**Result Register Data Justification** — Result data format is always unsigned. This bit controls justification of conversion data in the result registers. 0 Left justified data in the result registers. 1 Right justified data in the result registers. Table 15-9 gives example ATD results for an input signal range between 0 and 5.12 Volts.
6–3 S8C, S4C, S2C, S1C	**Conversion Sequence Length** — These bits control the number of conversions per sequence. Table 15-10 shows all combinations. At reset, S4C is set to 1 (sequence length is 4). This is to maintain software continuity to HC12 family.
2 FIFO	**Result Register FIFO Mode** — If this bit is zero (non-FIFO mode), the A/D conversion results map into the result registers based on the conversion sequence; the result of the first conversion appears in the first result register (ATDDR0), the second result in the second result register (ATDDR1), and so on. If this bit is one (FIFO mode) the conversion counter is not reset at the beginning or end of a conversion sequence; sequential conversion results are placed in consecutive result registers. In a continuously scanning conversion sequence, the result register counter will wrap around when it reaches the end of the result register file. The conversion counter value (CC3-0 in ATDSTAT0) can be used to determine where in the result register file, the current conversion result will be placed. Aborting a conversion or starting a new conversion clears the conversion counter even if FIFO=1. So the first result of a new conversion sequence, started by writing to ATDCTL5, will always be place in the first result register (ATDDDR0). Intended usage of FIFO mode is continuos conversion (SCAN=1) or triggered conversion (ETRIG=1). Which result registers hold valid data can be tracked using the conversion complete flags. Fast flag clear mode may be useful in a particular application to track valid data. If this bit is one, automatic compare of result registers is always disabled, that is ADC10B16C will behave as if ACMPIE and all CPME[*n*] were zero. 0 Conversion results are placed in the corresponding result register up to the selected sequence length. 1 Conversion results are placed in consecutive result registers (wrap around at end).
1–0 FRZ[1:0]	**Background Debug Freeze Enable** — When debugging an application, it is useful in many cases to have the ATD pause when a breakpoint (Freeze Mode) is encountered. These 2 bits determine how the ATD will respond to a breakpoint as shown in Table 15-11. Leakage onto the storage node and comparator reference capacitors may compromise the accuracy of an immediately frozen conversion depending on the length of the freeze period.

Table 15-9. Examples of ideal decimal ATD Results

Input Signal VRL = 0 Volts VRH = 5.12 Volts	8-Bit Codes (resolution=20mV)	10-Bit Codes (resolution=5mV)	Reserved
5.120 Volts	255	1023	Reserved
...	...	...	
0.022	1	4	
0.020	1	4	
0.018	1	4	
0.016	1	3	
0.014	1	3	
0.012	1	2	
0.010	1	2	
0.008	0	2	
0.006	0	1	
0.004	0	1	
0.003	0	1	
0.002	0	0	
0.000	0	0	

Table 15-10. Conversion Sequence Length Coding

S8C	S4C	S2C	S1C	Number of Conversions per Sequence
0	0	0	0	16
0	0	0	1	1
0	0	1	0	2
0	0	1	1	3
0	1	0	0	4
0	1	0	1	5
0	1	1	0	6
0	1	1	1	7
1	0	0	0	8
1	0	0	1	9
1	0	1	0	10
1	0	1	1	11
1	1	0	0	12
1	1	0	1	13
1	1	1	0	14
1	1	1	1	15

Table 15-11. ATD Behavior in Freeze Mode (Breakpoint)

FRZ1	FRZ0	Behavior in Freeze Mode
0	0	Continue conversion

Table 15-11. ATD Behavior in Freeze Mode (Breakpoint)

FRZ1	FRZ0	Behavior in Freeze Mode
0	1	Reserved
1	0	Finish current conversion, then freeze
1	1	Freeze Immediately

15.3.2.5 ATD Control Register 4 (ATDCTL4)

Writes to this register will abort current conversion sequence.

Module Base + 0x0004

	7	6	5	4	3	2	1	0
R W	SMP2	SMP1	SMP0	PRS[4:0]				
Reset	0	0	0	0	0	1	0	1

Figure 15-7. ATD Control Register 4 (ATDCTL4)

Read: Anytime

Write: Anytime

Table 15-12. ATDCTL4 Field Descriptions

Field	Description
7–5 SMP[2:0]	**Sample Time Select** — These three bits select the length of the sample time in units of ATD conversion clock cycles. Note that the ATD conversion clock period is itself a function of the prescaler value (bits PRS4-0). Table 15-13 lists the available sample time lengths.
4–0 PRS[4:0]	**ATD Clock Prescaler** — These 5 bits are the binary prescaler value PRS. The ATD conversion clock frequency is calculated as follows: $f_{ATDCLK} = \frac{f_{BUS}}{2 \times (PRS + 1)}$ Refer to Device Specification for allowed frequency range of f_{ATDCLK}.

Table 15-13. Sample Time Select

SMP2	SMP1	SMP0	Sample Time in Number of ATD Clock Cycles
0	0	0	4
0	0	1	6
0	1	0	8
0	1	1	10
1	0	0	12
1	0	1	16
1	1	0	20
1	1	1	24

15.3.2.6 ATD Control Register 5 (ATDCTL5)

Writes to this register will abort current conversion sequence and start a new conversion sequence. If the external trigger function is enabled (ETRIGE=1) an initial write to ATDCTL5 is required to allow starting of a conversion sequence which will then occur on each trigger event. Start of conversion means the beginning of the sampling phase.

Module Base + 0x0005

	7	6	5	4	3	2	1	0
R	0	SC	SCAN	MULT	CD	CC	CB	CA
W								
Reset	0	0	0	0	0	0	0	0

= Unimplemented or Reserved

Figure 15-8. ATD Control Register 5 (ATDCTL5)

Read: Anytime

Write: Anytime

Table 15-14. ATDCTL5 Field Descriptions

Field	Description
6 SC	**Special Channel Conversion Bit** — If this bit is set, then special channel conversion can be selected using CD, CC, CB and CA of ATDCTL5. Table 15-15 lists the coding. 0 Special channel conversions disabled 1 Special channel conversions enabled
5 SCAN	**Continuous Conversion Sequence Mode** — This bit selects whether conversion sequences are performed continuously or only once. If the external trigger function is enabled (ETRIGE=1) setting this bit has no effect, thus the external trigger always starts a single conversion sequence. 0 Single conversion sequence 1 Continuous conversion sequences (scan mode)
4 MULT	**Multi-Channel Sample Mode** — When MULT is 0, the ATD sequence controller samples only from the specified analog input channel for an entire conversion sequence. The analog channel is selected by channel selection code (control bits CD/CC/CB/CA located in ATDCTL5). When MULT is 1, the ATD sequence controller samples across channels. The number of channels sampled is determined by the sequence length value (S8C, S4C, S2C, S1C). The first analog channel examined is determined by channel selection code (CD, CC, CB, CA control bits); subsequent channels sampled in the sequence are determined by incrementing the channel selection code or wrapping around to AN0 (channel 0). 0 Sample only one channel 1 Sample across several channels
3–0 CD, CC, CB, CA	**Analog Input Channel Select Code** — These bits select the analog input channel(s). Table 15-15 lists the coding used to select the various analog input channels. In the case of single channel conversions (MULT=0), this selection code specifies the channel to be examined. In the case of multiple channel conversions (MULT=1), this selection code specifies the first channel to be examined in the conversion sequence. Subsequent channels are determined by incrementing the channel selection code or wrapping around to AN0 (after converting the channel defined by the Wrap Around Channel Select Bits WRAP3-0 in ATDCTL0). When starting with a channel number higher than the one defined by WRAP3-0 the first wrap around will be AN16 to AN0.

Table 15-15. Analog Input Channel Select Coding

SC	CD	CC	CB	CA	Analog Input Channel
0	0	0	0	0	AN0
	0	0	0	1	AN1
	0	0	1	0	AN2
	0	0	1	1	AN3
	0	1	0	0	AN4
	0	1	0	1	AN5
	0	1	1	0	AN6
	0	1	1	1	AN7
	1	0	0	0	AN8
	1	0	0	1	AN9
	1	0	1	0	AN10
	1	0	1	1	AN11
	1	1	0	0	AN12
	1	1	0	1	AN13
	1	1	1	0	AN14
	1	1	1	1	AN15
1	0	0	0	0	Internal_6,
	0	0	0	1	Internal_7
	0	0	1	0	Internal_0
	0	0	1	1	Internal_1
	0	1	0	0	VRH
	0	1	0	1	VRL
	0	1	1	0	(VRH+VRL) / 2
	0	1	1	1	Reserved
	1	0	0	0	Internal_2
	1	0	0	1	Internal_3
	1	0	1	0	Internal_4
	1	0	1	1	Internal_5
	1	1	X	X	Reserved

15.3.2.7 ATD Status Register 0 (ATDSTAT0)

This register contains the Sequence Complete Flag, overrun flags for external trigger and FIFO mode, and the conversion counter.

Module Base + 0x0006

	7	6	5	4	3	2	1	0
R	SCF	0	ETORF	FIFOR	CC3	CC2	CC1	CC0
W								
Reset	0	0	0	0	0	0	0	0

= Unimplemented or Reserved

Figure 15-9. ATD Status Register 0 (ATDSTAT0)

Read: Anytime

Write: Anytime (No effect on (CC3, CC2, CC1, CC0))

Table 15-16. ATDSTAT0 Field Descriptions

Field	Description
7 SCF	**Sequence Complete Flag** — This flag is set upon completion of a conversion sequence. If conversion sequences are continuously performed (SCAN=1), the flag is set after each one is completed. This flag is cleared when one of the following occurs: A) Write “1” to SCF B) Write to ATDCTL5 (a new conversion sequence is started) C) If AFFC=1 and a result register is read 0 Conversion sequence not completed 1 Conversion sequence has completed
5 ETORF	**External Trigger Overrun Flag** — While in edge sensitive mode (ETRIGLE=0), if additional active edges are detected while a conversion sequence is in process the overrun flag is set. This flag is cleared when one of the following occurs: A) Write “1” to ETORF B) Write to ATDCTL0,1,2,3,4, ATDCMPE or ATDCMPHT (a conversion sequence is aborted) C) Write to ATDCTL5 (a new conversion sequence is started) 0 No External trigger overrun error has occurred 1 External trigger overrun error has occurred
4 FIFOR	**Result Register Overrun Flag** — This bit indicates that a result register has been written to before its associated conversion complete flag (CCF) has been cleared. This flag is most useful when using the FIFO mode because the flag potentially indicates that result registers are out of sync with the input channels. However, it is also practical for non-FIFO modes, and indicates that a result register has been overwritten before it has been read (i.e. the old data has been lost). This flag is cleared when one of the following occurs: A) Write “1” to FIFOR B) Write to ATDCTL0,1,2,3,4, ATDCMPE or ATDCMPHT (a conversion sequence is aborted) C) Write to ATDCTL5 (a new conversion sequence is started) 0 No overrun has occurred 1 Overrun condition exists (result register has been written while associated CCFx flag was still set)

Table 15-16. ATDSTAT0 Field Descriptions (continued)

Field	Description
3–0 CC[3:0]	**Conversion Counter** — These 4 read-only bits are the binary value of the conversion counter. The conversion counter points to the result register that will receive the result of the current conversion. E.g. CC3=0, CC2=1, CC1=1, CC0=0 indicates that the result of the current conversion will be in ATD Result Register 6. If in non-FIFO mode (FIFO=0) the conversion counter is initialized to zero at the beginning and end of the conversion sequence. If in FIFO mode (FIFO=1) the register counter is not initialized. The conversion counter wraps around when its maximum value is reached. Aborting a conversion or starting a new conversion clears the conversion counter even if FIFO=1.

15.3.2.8 ATD Compare Enable Register (ATDCMPE)

Writes to this register will abort current conversion sequence.

Read: Anytime

Write: Anytime

Module Base + 0x0008

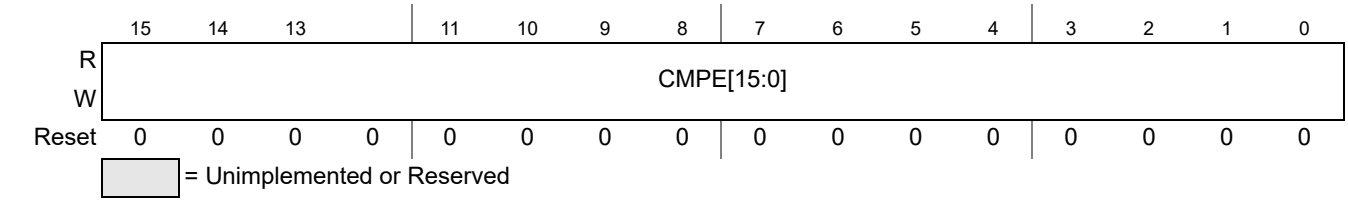

Figure 15-10. ATD Compare Enable Register (ATDCMPE)

Table 15-17. ATDCMPE Field Descriptions

Field	Description
15–0 CMPE[15:0]	**Compare Enable for Conversion Number *n* (*n*= 15, 14, 13, 12, 11, 10, 9, 8, 7, 6, 5, 4, 3, 2, 1, 0) of a Sequence (*n conversion number, NOT channel number!)*** — These bits enable automatic compare of conversion results individually for conversions of a sequence. The sense of each comparison is determined by the CMPHT[*n*] bit in the ATDCMPHT register. For each conversion number with CMPE[*n*]=1 do the following: 1) Write compare value to ATDDR*n* result register 2) Write compare operator with CMPHT[*n*] in ATDCPMHT register CCF[*n*] in ATDSTAT2 register will flag individual success of any comparison. 0 No automatic compare 1 Automatic compare of results for conversion *n* of a sequence is enabled.

15.3.2.9 ATD Status Register 2 (ATDSTAT2)

This read-only register contains the Conversion Complete Flags CCF[15:0].

Module Base + 0x000A

	15	14	13	12	11	10	9	8	7	6	5	4	3	2	1	0
R	CCF[15:0]															
W																
Reset	0	0	0	0	0	0	0	0	0	0	0	0	0	0	0	0

= Unimplemented or Reserved

Figure 15-11. ATD Status Register 2 (ATDSTAT2)

Read: Anytime

Write: Anytime (for details see Table 15-18 below)

Table 15-18. ATDSTAT2 Field Descriptions

Field	Description
15–0 CCF[15:0]	**Conversion Complete Flag *n* (*n*= 15, 14, 13, 12, 11, 10, 9, 8, 7, 6, 5, 4, 3, 2, 1, 0) (*n conversion number, NOT channel number!)***— A conversion complete flag is set at the end of each conversion in a sequence. The flags are associated with the conversion position in a sequence (and also the result register number). Therefore in non-fifo mode, CCF[4] is set when the fifth conversion in a sequence is complete and the result is available in result register ATDDR4; CCF[5] is set when the sixth conversion in a sequence is complete and the result is available in ATDDR5, and so forth. If automatic compare of conversion results is enabled (CMPE[*n*]=1 in ATDCMPE), the conversion complete flag is only set if comparison with ATDDR*n* is true. If ACMPIE=1 a compare interrupt will be requested. In this case, as the ATDDR*n* result register is used to hold the compare value, the result will not be stored there at the end of the conversion but is lost. A flag CCF[*n*] is cleared when one of the following occurs: A) Write to ATDCTL5 (a new conversion sequence is started) B) If AFFC=0, write “1” to CCF[*n*] C) If AFFC=1 and CMPE[*n*]=0, read of result register ATDDR*n* D) If AFFC=1 and CMPE[*n*]=1, write to result register ATDDR*n* In case of a concurrent set and clear on CCF[*n*]: The clearing by method A) will overwrite the set. The clearing by methods B) or C) or D) will be overwritten by the set. 0 Conversion number *n* not completed or successfully compared 1 If (CMPE[*n*]=0): Conversion number *n* has completed. Result is ready in ATDDR*n*. If (CMPE[*n*]=1): Compare for conversion result number *n* with compare value in ATDDR*n*, using compare operator CMPGT[*n*] is true. (No result available in ATDDR*n*)

15.3.2.10 ATD Input Enable Register (ATDDIEN)

Module Base + 0x000C

	15	14	13	12	11	10	9	8	7	6	5	4	3	2	1	0
R W	IEN[15:0]															
Reset	0	0	0	0	0	0	0	0	0	0	0	0	0	0	0	0

= Unimplemented or Reserved

Figure 15-12. ATD Input Enable Register (ATDDIEN)

Read: Anytime

Write: Anytime

Table 15-19. ATDDIEN Field Descriptions

Field	Description
15–0 IEN[15:0]	**ATD Digital Input Enable on channel *x* (*x*= 15, 14, 13, 12, 11, 10, 9, 8, 7, 6, 5, 4, 3, 2, 1, 0)** — This bit controls the digital input buffer from the analog input pin (AN*x*) to the digital data register. 0 Disable digital input buffer to AN*x* pin 1 Enable digital input buffer on AN*x* pin. **Note:** Setting this bit will enable the corresponding digital input buffer continuously. If this bit is set while simultaneously using it as an analog port, there is potentially increased power consumption because the digital input buffer maybe in the linear region.

15.3.2.11 ATD Compare Higher Than Register (ATDCMPHT)

Writes to this register will abort current conversion sequence.

Read: Anytime

Write: Anytime

Module Base + 0x000E

	15	14	13	12	11	10	9	8	7	6	5	4	3	2	1	0
R W	CMPHT[15:0]															
Reset	0	0	0	0	0	0	0	0	0	0	0	0	0	0	0	0

= Unimplemented or Reserved

Figure 15-13. ATD Compare Higher Than Register (ATDCMPHT)

Table 15-20. ATDCMPHT Field Descriptions

Field	Description
15–0 CMPHT[15:0]	**Compare Operation Higher Than Enable for conversion number *n* (*n*= 15, 14, 13, 12, 11, 10, 9, 8, 7, 6, 5, 4, 3, 2, 1, 0) of a Sequence (*n conversion number, NOT channel number!)*** — This bit selects the operator for comparison of conversion results. 0 If result of conversion *n* is **lower or same than** compare value in ATDDR*n*, this is flagged in ATDSTAT2 1 If result of conversion *n* is **higher than** compare value in ATDDR*n*, this is flagged in ATDSTAT2

15.3.2.12 ATD Conversion Result Registers (ATDDR*n*)

The A/D conversion results are stored in 16 result registers. Results are always in unsigned data representation. Left and right justification is selected using the DJM control bit in ATDCTL3.

If automatic compare of conversions results is enabled (CMPE[*n*]=1 in ATDCMPE), these registers must be written with the compare values in left or right justified format depending on the actual value of the DJM bit. In this case, as the ATDDR*n* register is used to hold the compare value, the result will not be stored there at the end of the conversion but is lost.

Attention, n is the conversion number, NOT the channel number!

Read: Anytime

Write: Anytime

NOTE

For conversions not using automatic compare, results are stored in the result registers after each conversion. In this case avoid writing to ATDDRn except for initial values, because an A/D result might be overwritten.

15.3.2.12.1 Left Justified Result Data (DJM=0)

Module Base +
0x0010 = ATDDR0, 0x0012 = ATDDR1, 0x0014 = ATDDR2, 0x0016 = ATDDR3
0x0018 = ATDDR4, 0x001A = ATDDR5, 0x001C = ATDDR6, 0x001E = ATDDR7
0x0020 = ATDDR8, 0x0022 = ATDDR9, 0x0024 = ATDDR10, 0x0026 = ATDDR11
0x0028 = ATDDR12, 0x002A = ATDDR13, 0x002C = ATDDR14, 0x002E = ATDDR15

	15	14	13	12	11	10	9	8	7	6	5	4	3	2	1	0
R	Result-Bit[11:0]												0	0	0	0
W																
Reset	0	0	0	0	0	0	0	0	0	0	0	0	0	0	0	0

= Unimplemented or Reserved

Figure 15-14. Left justified ATD conversion result register (ATDDR*n*)

Table 15-21 shows how depending on the A/D resolution the conversion result is transferred to the ATD result registers for left justified data. Compare is always done using all 12 bits of both the conversion result and the compare value in ATDDRn.

Table 15-21. Conversion result mapping to ATDDRn

A/D resolution	DJM	conversion result mapping to ATDDR*n*
8-bit data	0	Result-Bit[11:4] = conversion result, Result-Bit[3:0]=0000
10-bit data	0	Result-Bit[11:2] = conversion result, Result-Bit[1:0]=00

15.3.2.12.2 Right Justified Result Data (DJM=1)

Module Base +
0x0010 = ATDDR0, 0x0012 = ATDDR1, 0x0014 = ATDDR2, 0x0016 = ATDDR3
0x0018 = ATDDR4, 0x001A = ATDDR5, 0x001C = ATDDR6, 0x001E = ATDDR7
0x0020 = ATDDR8, 0x0022 = ATDDR9, 0x0024 = ATDDR10, 0x0026 = ATDDR11
0x0028 = ATDDR12, 0x002A = ATDDR13, 0x002C = ATDDR14, 0x002E = ATDDR15

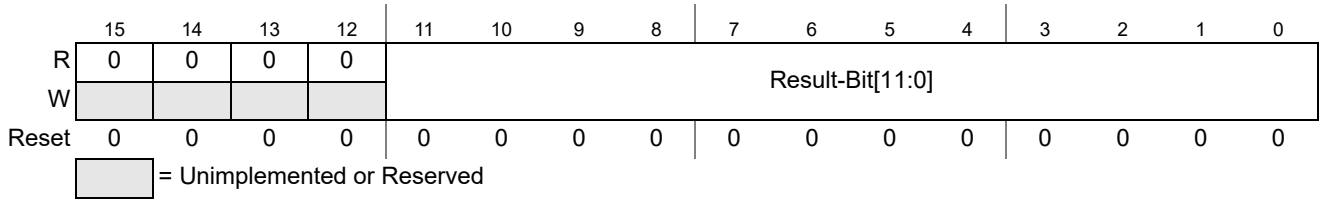

Figure 15-15. Right justified ATD conversion result register (ATDDR*n*)

Table 15-22 shows how depending on the A/D resolution the conversion result is transferred to the ATD result registers for right justified data. Compare is always done using all 12 bits of both the conversion result and the compare value in ATDDRn.

Table 15-22. Conversion result mapping to ATDDRn

A/D resolution	DJM	conversion result mapping to ATDDR*n*
8-bit data	1	Result-Bit[7:0] = result, Result-Bit[11:8]=0000
10-bit data	1	Result-Bit[9:0] = result, Result-Bit[11:10]=00

15.4 Functional Description

The ADC10B16C consists of an analog sub-block and a digital sub-block.

15.4.1 Analog Sub-Block

The analog sub-block contains all analog electronics required to perform a single conversion. Separate power supplies VDDA and VSSA allow to isolate noise of other MCU circuitry from the analog sub-block.

15.4.1.1 Sample and Hold Machine

The Sample and Hold Machine controls the storage and charge of the sample capacitor to the voltage level of the analog signal at the selected ADC input channel.

During the sample process the analog input connects directly to the storage node.

The input analog signals are unipolar and must be within the potential range of VSSA to VDDA.

During the hold process the analog input is disconnected from the storage node.

15.4.1.2 Analog Input Multiplexer

The analog input multiplexer connects one of the 16 external analog input channels to the sample and hold machine.

15.4.1.3 Analog-to-Digital (A/D) Machine

The A/D Machine performs analog to digital conversions. The resolution is program selectable to be either 8 or 10 bits. The A/D machine uses a successive approximation architecture. It functions by comparing the sampled and stored analog voltage with a series of binary coded discrete voltages.

By following a binary search algorithm, the A/D machine identifies the discrete voltage that is nearest to the sampled and stored voltage.

When not converting the A/D machine is automatically powered down.

Only analog input signals within the potential range of VRL to VRH (A/D reference potentials) will result in a non-railed digital output code.

15.4.2 Digital Sub-Block

This subsection describes some of the digital features in more detail. See Section 15.3.2, “Register Descriptions” for all details.

15.4.2.1 External Trigger Input

The external trigger feature allows the user to synchronize ATD conversions to an external event rather than relying only on software to trigger the ATD module when a conversion is about to take place. The external trigger signal (out of reset ATD channel 15, configurable in ATDCTL1) is programmable to be

edge or level sensitive with polarity control. Table 15-23 gives a brief description of the different combinations of control bits and their effect on the external trigger function.

In order to avoid maybe false trigger events please enable the external digital input via ATDDIEN register first and in the following enable the external trigger mode by bit ETRIGE.

Table 15-23. External Trigger Control Bits

ETRIGLE	ETRIGP	ETRIGE	SCAN	Description
X	X	0	0	Ignores external trigger. Performs one conversion sequence and stops.
X	X	0	1	Ignores external trigger. Performs continuous conversion sequences.
0	0	1	X	Trigger falling edge sensitive. Performs one conversion sequence per trigger.
0	1	1	X	Trigger rising edge sensitive. Performs one conversion sequence per trigger.
1	0	1	X	Trigger low level sensitive. Performs continuous conversions while trigger level is active.
1	1	1	X	Trigger high level sensitive. Performs continuous conversions while trigger level is active.

In either level or edge sensitive mode, the first conversion begins when the trigger is received.

Once ETRIGE is enabled a conversion must be triggered externally after writing to ATDCTL5 register.

During a conversion in edge sensitive mode, if additional trigger events are detected the overrun error flag ETORF is set.

If level sensitive mode is active and the external trigger de-asserts and later asserts again during a conversion sequence, this does not constitute an overrun. Therefore, the flag is not set. If the trigger is left active in level sensitive mode when a sequence is about to complete, another sequence will be triggered immediately.

15.4.2.2 General-Purpose Digital Port Operation

Each ATD input pin can be switched between analog or digital input functionality. An analog multiplexer makes each ATD input pin selected as analog input available to the A/D converter.

The pad of the ATD input pin is always connected to the analog input channel of the analog mulitplexer.

Each pad input signal is buffered to the digital port register.

This buffer can be turned on or off with the ATDDIEN register for each ATD input pin.
This is important so that the buffer does not draw excess current when an ATD input pin is selected as analog input to the ADC10B16C.

15.5 Resets

At reset the ADC10B16C is in a power down state. The reset state of each individual bit is listed within the Register Description section (see Section 15.3.2, “Register Descriptions”) which details the registers and their bit-field.

15.6 Interrupts

The interrupts requested by the ADC10B16C are listed in Table 15-24. Refer to MCU specification for related vector address and priority.

Table 15-24. ATD Interrupt Vectors

Interrupt Source	CCR Mask	Local Enable
Sequence Complete Interrupt	I bit	ASCIE in ATDCTL2
Compare Interrupt	I bit	ACMPIE in ATDCTL2

See Section 15.3.2, “Register Descriptions” for further details.

Chapter 16
Analog-to-Digital Converter (ADC12B16CV2)

Revision History

Version Number	Revision Date	Effective Date	Author	Description of Changes
V02.00	18 June 2009	18 June 2009		Initial version copied 12 channel block guide
V02.01	09 Feb 2010	09 Feb 2010		Updated Table 16-15 Analog Input Channel Select Coding - description of internal channels. Updated register ATDDR (left/right justified result) description in section 16.3.2.12.1/16-554 and 16.3.2.12.2/16-555 and added Table 16-21 to improve feature description. Fixed typo in Table 16-9 - conversion result for 3mV and 10bit resolution
V02.03	26 Feb 2010	26 Feb 2010		Corrected Table 16-15 Analog Input Channel Select Coding - description of internal channels.
V02.04	26 Mar 2010	16 Mar 2010		Corrected typo: Reset value of ATDDIEN register
V02.05	14 Apr 2010	14 Apr 2010		Corrected typos to be in-line with SoC level pin naming conventions for VDDA, VSSA, VRL and VRH.
V02.06	25 Aug 2010	25 Aug 2010		Removed feature of conversion during STOP and general wording clean up done in Section 16.4, “Functional Description
v02.07	09 Sep 2010	09 Sep 2010		Update of internal only information.
V02.08	11 Feb 2011	11 Feb 2011		Connectivity Information regarding internal channel_6 added to Table 16-15.
V02.09	29 Mar 2011	29 Mar 2011		Fixed typo in bit description field Table 16-14 for bits CD, CC, CB, CA. Last sentence contained a wrong highest channel number (it is not AN7 to AN0 instead it is AN15 to AN0).
V02.10	22. Jun 2012	22. Jun 2012		Updated register wirte access information in section 16.3.2.9/16-552
V02.11	29. Jun 2012	29. Jun 2012		Removed IP name in block diagram Figure 16-1
V02.12	02 Oct 2012	02 Oct 2012		Added user information to avoid maybe false external trigger events when enabling the external trigger mode (Section 16.4.2.1, “External Trigger Input).

16.1 Introduction

The ADC12B16C is a 16-channel, 12-bit, multiplexed input successive approximation analog-to-digital converter. Refer to device electrical specifications for ATD accuracy.

16.1.1 Features

- 8-, 10-, or 12-bit resolution.
- Automatic return to low power after conversion sequence
- Automatic compare with interrupt for higher than or less/equal than programmable value
- Programmable sample time.
- Left/right justified result data.
- External trigger control.
- Sequence complete interrupt.
- Analog input multiplexer for 8 analog input channels.
- Special conversions for VRH, VRL, (VRL+VRH)/2.
- 1-to-16 conversion sequence lengths.
- Continuous conversion mode.
- Multiple channel scans.
- Configurable external trigger functionality on any AD channel or any of four additional trigger inputs. The four additional trigger inputs can be chip external or internal. Refer to device specification for availability and connectivity.
- Configurable location for channel wrap around (when converting multiple channels in a sequence).

16.1.2 Modes of Operation

16.1.2.1 Conversion Modes

There is software programmable selection between performing **single** or **continuous conversion** on a **single channel** or **multiple channels**.

16.1.2.2 MCU Operating Modes

- **Stop Mode**
  Entering Stop Mode aborts any conversion sequence in progress and if a sequence was aborted restarts it after exiting stop mode. This has the same effect/consequences as starting a conversion sequence with write to ATDCTL5. So after exiting from stop mode with a previously aborted sequence all flags are cleared etc.
- **Wait Mode**
  ADC12B16C behaves same in Run and Wait Mode. For reduced power consumption continuous conversions should be aborted before entering Wait mode.
- **Freeze Mode**
  In Freeze Mode the ADC12B16C will either continue or finish or stop converting according to the FRZ1 and FRZ0 bits. This is useful for debugging and emulation.

16.1.3 Block Diagram

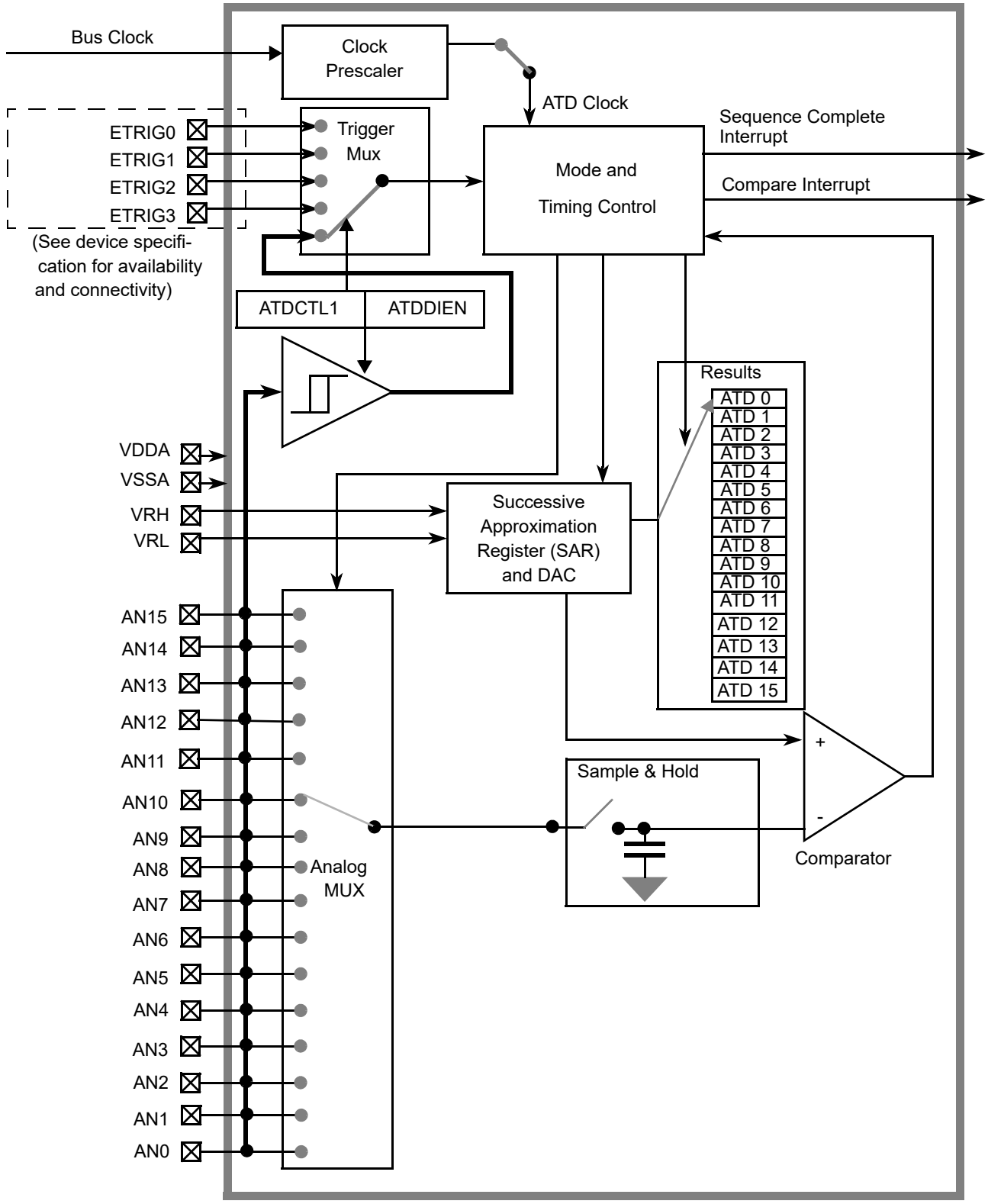

Figure 16-1. ADC12B16C Block Diagram

16.2 Signal Description

This section lists all inputs to the ADC12B16C block.

16.2.1 Detailed Signal Descriptions

16.2.1.1 AN*x* (*x* = 15, 14, 13, 12, 11, 10, 9, 8, 7, 6, 5, 4, 3, 2, 1, 0)

This pin serves as the analog input Channel *x*. It can also be configured as digital port or external trigger for the ATD conversion.

16.2.1.2 ETRIG3, ETRIG2, ETRIG1, ETRIG0

These inputs can be configured to serve as an external trigger for the ATD conversion.

Refer to device specification for availability and connectivity of these inputs!

16.2.1.3 VRH, VRL

VRH is the high reference voltage, VRL is the low reference voltage for ATD conversion.

16.2.1.4 VDDA, VSSA

These pins are the power supplies for the analog circuitry of the ADC12B16C block.

16.3 Memory Map and Register Definition

This section provides a detailed description of all registers accessible in the ADC12B16C.

16.3.1 Module Memory Map

Figure 16-2 gives an overview on all ADC12B16C registers.

NOTE

Register Address = Base Address + Address Offset, where the Base Address is defined at the MCU level and the Address Offset is defined at the module level.

Address	Name		Bit 7	6	5	4	3	2	1	Bit 0
0x0000	ATDCTL0	R W	Reserved	0	0	0	WRAP3	WRAP2	WRAP1	WRAP0
0x0001	ATDCTL1	R W	ETRIGSEL	SRES1	SRES0	SMP_DIS	ETRIGCH3	ETRIGCH2	ETRIGCH1	ETRIGCH0
0x0002	ATDCTL2	R W	0	AFFC	Reserved	ETRIGLE	ETRIGP	ETRIGE	ASCIE	ACMPIE

= Unimplemented or Reserved

Figure 16-2. ADC12B16C Register Summary (Sheet 1 of 3)

Address	Name		Bit 7	6	5	4	3	2	1	Bit 0
0x0003	ATDCTL3	R	DJM	S8C	S4C	S2C	S1C	FIFO	FRZ1	FRZ0
		W								
0x0004	ATDCTL4	R	SMP2	SMP1	SMP0	PRS[4:0]				
		W								
0x0005	ATDCTL5	R	0	SC	SCAN	MULT	CD	CC	CB	CA
		W								
0x0006	ATDSTAT0	R	SCF	0	ETORF	FIFOR	CC3	CC2	CC1	CC0
		W								
0x0007	Unimple-mented	R	0	0	0	0	0	0	0	0
		W								
0x0008	ATDCMPEH	R	CMPE[15:8]							
		W								
0x0009	ATDCMPEL	R	CMPE[7:0]							
		W								
0x000A	ATDSTAT2H	R	CCF[15:8]							
		W								
0x000B	ATDSTAT2L	R	CCF[7:0]							
		W								
0x000C	ATDDIENH	R	IEN[15:8]							
		W								
0x000D	ATDDIENL	R	IEN[7:0]							
		W								
0x000E	ATDCMPHTH	R	CMPHT[15:8]							
		W								
0x000F	ATDCMPHTL	R	CMPHT[7:0]							
		W								
0x0010	ATDDR0	R	See Section 16.3.2.12.1, “Left Justified Result Data (DJM=0)” and Section 16.3.2.12.2, “Right Justified Result Data (DJM=1)”							
		W								
0x0012	ATDDR1	R	See Section 16.3.2.12.1, “Left Justified Result Data (DJM=0)” and Section 16.3.2.12.2, “Right Justified Result Data (DJM=1)”							
		W								
0x0014	ATDDR2	R	See Section 16.3.2.12.1, “Left Justified Result Data (DJM=0)” and Section 16.3.2.12.2, “Right Justified Result Data (DJM=1)”							
		W								
0x0016	ATDDR3	R	See Section 16.3.2.12.1, “Left Justified Result Data (DJM=0)” and Section 16.3.2.12.2, “Right Justified Result Data (DJM=1)”							
		W								
0x0018	ATDDR4	R	See Section 16.3.2.12.1, “Left Justified Result Data (DJM=0)” and Section 16.3.2.12.2, “Right Justified Result Data (DJM=1)”							
		W								
0x001A	ATDDR5	R	See Section 16.3.2.12.1, “Left Justified Result Data (DJM=0)” and Section 16.3.2.12.2, “Right Justified Result Data (DJM=1)”							
		W								
0x001C	ATDDR6	R	See Section 16.3.2.12.1, “Left Justified Result Data (DJM=0)” and Section 16.3.2.12.2, “Right Justified Result Data (DJM=1)”							
		W								
0x001E	ATDDR7	R	See Section 16.3.2.12.1, “Left Justified Result Data (DJM=0)” and Section 16.3.2.12.2, “Right Justified Result Data (DJM=1)”							
		W								
0x0020	ATDDR8	R	See Section 16.3.2.12.1, “Left Justified Result Data (DJM=0)” and Section 16.3.2.12.2, “Right Justified Result Data (DJM=1)”							
		W								
0x0022	ATDDR9	R	See Section 16.3.2.12.1, “Left Justified Result Data (DJM=0)” and Section 16.3.2.12.2, “Right Justified Result Data (DJM=1)”							
		W								

= Unimplemented or Reserved

Figure 16-2. ADC12B16C Register Summary (Sheet 2 of 3)

Address	Name		Bit 7	6	5	4	3	2	1	Bit 0
0x0024	ATDDR10	R W	See Section 16.3.2.12.1, “Left Justified Result Data (DJM=0)” and Section 16.3.2.12.2, “Right Justified Result Data (DJM=1)”							
0x0026	ATDDR11	R W	See Section 16.3.2.12.1, “Left Justified Result Data (DJM=0)” and Section 16.3.2.12.2, “Right Justified Result Data (DJM=1)”							
0x0028	ATDDR12	R W	See Section 16.3.2.12.1, “Left Justified Result Data (DJM=0)” and Section 16.3.2.12.2, “Right Justified Result Data (DJM=1)”							
0x002A	ATDDR13	R W	See Section 16.3.2.12.1, “Left Justified Result Data (DJM=0)” and Section 16.3.2.12.2, “Right Justified Result Data (DJM=1)”							
0x002C	ATDDR14	R W	See Section 16.3.2.12.1, “Left Justified Result Data (DJM=0)” and Section 16.3.2.12.2, “Right Justified Result Data (DJM=1)”							
0x002E	ATDDR15	R W	See Section 16.3.2.12.1, “Left Justified Result Data (DJM=0)” and Section 16.3.2.12.2, “Right Justified Result Data (DJM=1)”							
		W								

= Unimplemented or Reserved

Figure 16-2. ADC12B16C Register Summary (Sheet 3 of 3)

16.3.2 Register Descriptions

This section describes in address order all the ADC12B16C registers and their individual bits.

16.3.2.1 ATD Control Register 0 (ATDCTL0)

Writes to this register will abort current conversion sequence.

Module Base + 0x0000

	7	6	5	4	3	2	1	0
R	Reserved	0	0	0	WRAP3	WRAP2	WRAP1	WRAP0
W								
Reset	0	0	0	0	1	1	1	1

= Unimplemented or Reserved

Figure 16-3. ATD Control Register 0 (ATDCTL0)

Read: Anytime

Write: Anytime, in special modes always write 0 to Reserved Bit 7.

Table 16-1. ATDCTL0 Field Descriptions

Field	Description
3-0 WRAP[3-0]	**Wrap Around Channel Select Bits** — These bits determine the channel for wrap around when doing multi-channel conversions. The coding is summarized in Table 16-2.

Table 16-2. Multi-Channel Wrap Around Coding

WRAP3	WRAP2	WRAP1	WRAP0	Multiple Channel Conversions (MULT = 1) Wraparound to AN0 after Converting
0	0	0	0	Reserved[1]
0	0	0	1	AN1
0	0	1	0	AN2
0	0	1	1	AN3
0	1	0	0	AN4
0	1	0	1	AN5
0	1	1	0	AN6
0	1	1	1	AN7
1	0	0	0	AN8
1	0	0	1	AN9
1	0	1	0	AN10
1	0	1	1	AN11
1	1	0	0	AN12
1	1	0	1	AN13
1	1	1	0	AN14
1	1	1	1	AN15

[1]If only AN0 should be converted use MULT=0.

16.3.2.2 ATD Control Register 1 (ATDCTL1)

Writes to this register will abort current conversion sequence.

Module Base + 0x0001

	7	6	5	4	3	2	1	0
R W	ETRIGSEL	SRES1	SRES0	SMP_DIS	ETRIGCH3	ETRIGCH2	ETRIGCH1	ETRIGCH0
Reset	0	0	1	0	1	1	1	1

Figure 16-4. ATD Control Register 1 (ATDCTL1)

Read: Anytime

Write: Anytime

Table 16-3. ATDCTL1 Field Descriptions

Field	Description
7 ETRIGSEL	**External Trigger Source Select** — This bit selects the external trigger source to be either one of the AD channels or one of the ETRIG3-0 inputs. See device specification for availability and connectivity of ETRIG3-0 inputs. If a particular ETRIG3-0 input option is not available, writing a 1 to ETRISEL only sets the bit but has no effect, this means that one of the AD channels (selected by ETRIGCH3-0) is configured as the source for external trigger. The coding is summarized in Table 16-5.
6–5 SRES[1:0]	**A/D Resolution Select** — These bits select the resolution of A/D conversion results. See Table 16-4 for coding.
4 SMP_DIS	**Discharge Before Sampling Bit** 0 No discharge before sampling. 1 The internal sample capacitor is discharged before sampling the channel. This adds 2 ATD clock cycles to the sampling time. This can help to detect an open circuit instead of measuring the previous sampled channel.
3–0 ETRIGCH[3:0]	**External Trigger Channel Select** — These bits select one of the AD channels or one of the ETRIG3-0 inputs as source for the external trigger. The coding is summarized in Table 16-5.

Table 16-4. A/D Resolution Coding

SRES1	SRES0	A/D Resolution
0	0	8-bit data
0	1	10-bit data
1	0	12-bit data
1	1	Reserved

Table 16-5. External Trigger Channel Select Coding

ETRIGSEL	ETRIGCH3	ETRIGCH2	ETRIGCH1	ETRIGCH0	External trigger source is
0	0	0	0	0	AN0
0	0	0	0	1	AN1
0	0	0	1	0	AN2
0	0	0	1	1	AN3
0	0	1	0	0	AN4
0	0	1	0	1	AN5
0	0	1	1	0	AN6
0	0	1	1	1	AN7
0	1	0	0	0	AN8
0	1	0	0	1	AN9
0	1	0	1	0	AN10
0	1	0	1	1	AN11
0	1	1	0	0	AN12
0	1	1	0	1	AN13
0	1	1	1	0	AN14
0	1	1	1	1	AN15
1	0	0	0	0	ETRIG0[1]
1	0	0	0	1	ETRIG1[1]
1	0	0	1	0	ETRIG2[1]
1	0	0	1	1	ETRIG3[1]
1	0	1	X	X	Reserved
1	1	X	X	X	Reserved

[1] Only if ETRIG3-0 input option is available (see device specification), else ETRISEL is ignored, that means external trigger source is still on one of the AD channels selected by ETRIGCH3-0

16.3.2.3 ATD Control Register 2 (ATDCTL2)

Writes to this register will abort current conversion sequence.

Module Base + 0x0002

	7	6	5	4	3	2	1	0
R	0	AFFC	Reserved	ETRIGLE	ETRIGP	ETRIGE	ASCIE	ACMPIE
W								
Reset	0	0	0	0	0	0	0	0

= Unimplemented or Reserved

Figure 16-5. ATD Control Register 2 (ATDCTL2)

Read: Anytime

Write: Anytime

Table 16-6. ATDCTL2 Field Descriptions

Field	Description
6 AFFC	**ATD Fast Flag Clear All** 0 ATD flag clearing done by write 1 to respective CCF[*n*] flag. 1 Changes all ATD conversion complete flags to a fast clear sequence. For compare disabled (CMPE[*n*]=0) a read access to the result register will cause the associated CCF[*n*] flag to clear automatically. For compare enabled (CMPE[*n*]=1) a write access to the result register will cause the associated CCF[*n*] flag to clear automatically.
5 Reserved	Do not alter this bit from its reset value.It is for Manufacturer use only and can change the ATD behavior.
4 ETRIGLE	**External Trigger Level/Edge Control** — This bit controls the sensitivity of the external trigger signal. See Table 16-7 for details.
3 ETRIGP	**External Trigger Polarity** — This bit controls the polarity of the external trigger signal. See Table 16-7 for details.
2 ETRIGE	**External Trigger Mode Enable** — This bit enables the external trigger on one of the AD channels or one of the ETRIG3-0 inputs as described in Table 16-5. If the external trigger source is one of the AD channels, the digital input buffer of this channel is enabled. The external trigger allows to synchronize the start of conversion with external events. 0 Disable external trigger 1 Enable external trigger
1 ASCIE	**ATD Sequence Complete Interrupt Enable** 0 ATD Sequence Complete interrupt requests are disabled. 1 ATD Sequence Complete interrupt will be requested whenever SCF=1 is set.
0 ACMPIE	**ATD Compare Interrupt Enable** — If automatic compare is enabled for conversion *n* (CMPE[*n*]=1 in ATDCMPE register) this bit enables the compare interrupt. If the CCF[*n*] flag is set (showing a successful compare for conversion *n*), the compare interrupt is triggered. 0 ATD Compare interrupt requests are disabled. 1 For the conversions in a sequence for which automatic compare is enabled (CMPE[*n*]=1), an ATD Compare Interrupt will be requested whenever any of the respective CCF flags is set.

Table 16-7. External Trigger Configurations

ETRIGLE	ETRIGP	External Trigger Sensitivity
0	0	Falling edge
0	1	Rising edge
1	0	Low level
1	1	High level

16.3.2.4 ATD Control Register 3 (ATDCTL3)

Writes to this register will abort current conversion sequence.

Module Base + 0x0003

	7	6	5	4	3	2	1	0
R W	DJM	S8C	S4C	S2C	S1C	FIFO	FRZ1	FRZ0
Reset	0	0	1	0	0	0	0	0

= Unimplemented or Reserved

Figure 16-6. ATD Control Register 3 (ATDCTL3)

Read: Anytime

Write: Anytime

Table 16-8. ATDCTL3 Field Descriptions

Field	Description
7 DJM	**Result Register Data Justification** — Result data format is always unsigned. This bit controls justification of conversion data in the result registers. 0 Left justified data in the result registers. 1 Right justified data in the result registers. Table 16-9 gives example ATD results for an input signal range between 0 and 5.12 Volts.
6–3 S8C, S4C, S2C, S1C	**Conversion Sequence Length** — These bits control the number of conversions per sequence. Table 16-10 shows all combinations. At reset, S4C is set to 1 (sequence length is 4). This is to maintain software continuity to HC12 family.
2 FIFO	**Result Register FIFO Mode** — If this bit is zero (non-FIFO mode), the A/D conversion results map into the result registers based on the conversion sequence; the result of the first conversion appears in the first result register (ATDDR0), the second result in the second result register (ATDDR1), and so on. If this bit is one (FIFO mode) the conversion counter is not reset at the beginning or end of a conversion sequence; sequential conversion results are placed in consecutive result registers. In a continuously scanning conversion sequence, the result register counter will wrap around when it reaches the end of the result register file. The conversion counter value (CC3-0 in ATDSTAT0) can be used to determine where in the result register file, the current conversion result will be placed. Aborting a conversion or starting a new conversion clears the conversion counter even if FIFO=1. So the first result of a new conversion sequence, started by writing to ATDCTL5, will always be place in the first result register (ATDDDR0). Intended usage of FIFO mode is continuos conversion (SCAN=1) or triggered conversion (ETRIG=1). Which result registers hold valid data can be tracked using the conversion complete flags. Fast flag clear mode may be useful in a particular application to track valid data. If this bit is one, automatic compare of result registers is always disabled, that is ADC12B16C will behave as if ACMPIE and all CPME[*n*] were zero. 0 Conversion results are placed in the corresponding result register up to the selected sequence length. 1 Conversion results are placed in consecutive result registers (wrap around at end).
1–0 FRZ[1:0]	**Background Debug Freeze Enable** — When debugging an application, it is useful in many cases to have the ATD pause when a breakpoint (Freeze Mode) is encountered. These 2 bits determine how the ATD will respond to a breakpoint as shown in Table 16-11. Leakage onto the storage node and comparator reference capacitors may compromise the accuracy of an immediately frozen conversion depending on the length of the freeze period.

Table 16-9. Examples of ideal decimal ATD Results

Input Signal VRL = 0 Volts VRH = 5.12 Volts	8-Bit Codes (resolution=20mV)	10-Bit Codes (resolution=5mV)	12-Bit Codes (transfer curve has 1.25mV offset) (resolution=1.25mV)
5.120 Volts	255	1023	4095
...	...	...	...
0.022	1	4	17
0.020	1	4	16
0.018	1	4	14
0.016	1	3	12
0.014	1	3	11
0.012	1	2	9
0.010	1	2	8
0.008	0	2	6
0.006	0	1	4
0.004	0	1	3
0.003	0	1	2
0.002	0	0	1
0.000	0	0	0

Table 16-10. Conversion Sequence Length Coding

S8C	S4C	S2C	S1C	Number of Conversions per Sequence
0	0	0	0	16
0	0	0	1	1
0	0	1	0	2
0	0	1	1	3
0	1	0	0	4
0	1	0	1	5
0	1	1	0	6
0	1	1	1	7
1	0	0	0	8
1	0	0	1	9
1	0	1	0	10
1	0	1	1	11
1	1	0	0	12
1	1	0	1	13
1	1	1	0	14
1	1	1	1	15

Table 16-11. ATD Behavior in Freeze Mode (Breakpoint)

FRZ1	FRZ0	Behavior in Freeze Mode
0	0	Continue conversion
0	1	Reserved
1	0	Finish current conversion, then freeze
1	1	Freeze Immediately

16.3.2.5 ATD Control Register 4 (ATDCTL4)

Writes to this register will abort current conversion sequence.

Module Base + 0x0004



Figure 16-7. ATD Control Register 4 (ATDCTL4)

Read: Anytime

Write: Anytime

Table 16-12. ATDCTL4 Field Descriptions

Field	Description
7–5 SMP[2:0]	**Sample Time Select** — These three bits select the length of the sample time in units of ATD conversion clock cycles. Note that the ATD conversion clock period is itself a function of the prescaler value (bits PRS4-0). Table 16-13 lists the available sample time lengths.
4–0 PRS[4:0]	**ATD Clock Prescaler** — These 5 bits are the binary prescaler value PRS. The ATD conversion clock frequency is calculated as follows: $f_{ATDCLK} = \frac{f_{BUS}}{2 \times (PRS + 1)}$ Refer to Device Specification for allowed frequency range of f_{ATDCLK}.

Table 16-13. Sample Time Select

SMP2	SMP1	SMP0	Sample Time in Number of ATD Clock Cycles
0	0	0	4
0	0	1	6
0	1	0	8
0	1	1	10
1	0	0	12
1	0	1	16
1	1	0	20

Table 16-13. Sample Time Select

SMP2	SMP1	SMP0	Sample Time in Number of ATD Clock Cycles
1	1	1	24

16.3.2.6 ATD Control Register 5 (ATDCTL5)

Writes to this register will abort current conversion sequence and start a new conversion sequence. If the external trigger function is enabled (ETRIGE=1) an initial write to ATDCTL5 is required to allow starting of a conversion sequence which will then occur on each trigger event. Start of conversion means the beginning of the sampling phase.

Module Base + 0x0005

	7	6	5	4	3	2	1	0
R	0	SC	SCAN	MULT	CD	CC	CB	CA
W								
Reset	0	0	0	0	0	0	0	0

= Unimplemented or Reserved

Figure 16-8. ATD Control Register 5 (ATDCTL5)

Read: Anytime

Write: Anytime

Table 16-14. ATDCTL5 Field Descriptions

Field	Description
6 SC	**Special Channel Conversion Bit** — If this bit is set, then special channel conversion can be selected using CD, CC, CB and CA of ATDCTL5. Table 16-15 lists the coding. 0 Special channel conversions disabled 1 Special channel conversions enabled
5 SCAN	**Continuous Conversion Sequence Mode** — This bit selects whether conversion sequences are performed continuously or only once. If the external trigger function is enabled (ETRIGE=1) setting this bit has no effect, thus the external trigger always starts a single conversion sequence. 0 Single conversion sequence 1 Continuous conversion sequences (scan mode)

Table 16-14. ATDCTL5 Field Descriptions (continued)

Field	Description
4 MULT	**Multi-Channel Sample Mode** — When MULT is 0, the ATD sequence controller samples only from the specified analog input channel for an entire conversion sequence. The analog channel is selected by channel selection code (control bits CD/CC/CB/CA located in ATDCTL5). When MULT is 1, the ATD sequence controller samples across channels. The number of channels sampled is determined by the sequence length value (S8C, S4C, S2C, S1C). The first analog channel examined is determined by channel selection code (CD, CC, CB, CA control bits); subsequent channels sampled in the sequence are determined by incrementing the channel selection code or wrapping around to AN0 (channel 0). 0 Sample only one channel 1 Sample across several channels
3–0 CD, CC, CB, CA	**Analog Input Channel Select Code** — These bits select the analog input channel(s). Table 16-15 lists the coding used to select the various analog input channels. In the case of single channel conversions (MULT=0), this selection code specifies the channel to be examined. In the case of multiple channel conversions (MULT=1), this selection code specifies the first channel to be examined in the conversion sequence. Subsequent channels are determined by incrementing the channel selection code or wrapping around to AN0 (after converting the channel defined by the Wrap Around Channel Select Bits WRAP3-0 in ATDCTL0). When starting with a channel number higher than the one defined by WRAP3-0 the first wrap around will be AN16 to AN0.

Table 16-15. Analog Input Channel Select Coding

SC	CD	CC	CB	CA	Analog Input Channel
0	0	0	0	0	AN0
	0	0	0	1	AN1
	0	0	1	0	AN2
	0	0	1	1	AN3
	0	1	0	0	AN4
	0	1	0	1	AN5
	0	1	1	0	AN6
	0	1	1	1	AN7
	1	0	0	0	AN8
	1	0	0	1	AN9
	1	0	1	0	AN10
	1	0	1	1	AN11
	1	1	0	0	AN12
	1	1	0	1	AN13
	1	1	1	0	AN14
	1	1	1	1	AN15

Table 16-15. Analog Input Channel Select Coding

SC	CD	CC	CB	CA	Analog Input Channel
1	0	0	0	0	Internal_6,
	0	0	0	1	Internal_7
	0	0	1	0	Internal_0
	0	0	1	1	Internal_1
	0	1	0	0	VRH
	0	1	0	1	VRL
	0	1	1	0	(VRH+VRL) / 2
	0	1	1	1	Reserved
	1	0	0	0	Internal_2
	1	0	0	1	Internal_3
	1	0	1	0	Internal_4
	1	0	1	1	Internal_5
	1	1	X	X	Reserved

16.3.2.7 ATD Status Register 0 (ATDSTAT0)

This register contains the Sequence Complete Flag, overrun flags for external trigger and FIFO mode, and the conversion counter.

Module Base + 0x0006

	7	6	5	4	3	2	1	0
R	SCF	0	ETORF	FIFOR	CC3	CC2	CC1	CC0
W								
Reset	0	0	0	0	0	0	0	0

= Unimplemented or Reserved

Figure 16-9. ATD Status Register 0 (ATDSTAT0)

Read: Anytime

Write: Anytime (No effect on (CC3, CC2, CC1, CC0))

Table 16-16. ATDSTAT0 Field Descriptions

Field	Description
7 SCF	**Sequence Complete Flag** — This flag is set upon completion of a conversion sequence. If conversion sequences are continuously performed (SCAN=1), the flag is set after each one is completed. This flag is cleared when one of the following occurs: A) Write “1” to SCF B) Write to ATDCTL5 (a new conversion sequence is started) C) If AFFC=1 and a result register is read 0 Conversion sequence not completed 1 Conversion sequence has completed
5 ETORF	**External Trigger Overrun Flag** — While in edge sensitive mode (ETRIGLE=0), if additional active edges are detected while a conversion sequence is in process the overrun flag is set. This flag is cleared when one of the following occurs: A) Write “1” to ETORF B) Write to ATDCTL0,1,2,3,4, ATDCMPE or ATDCMPHT (a conversion sequence is aborted) C) Write to ATDCTL5 (a new conversion sequence is started) 0 No External trigger overrun error has occurred 1 External trigger overrun error has occurred
4 FIFOR	**Result Register Overrun Flag** — This bit indicates that a result register has been written to before its associated conversion complete flag (CCF) has been cleared. This flag is most useful when using the FIFO mode because the flag potentially indicates that result registers are out of sync with the input channels. However, it is also practical for non-FIFO modes, and indicates that a result register has been overwritten before it has been read (i.e. the old data has been lost). This flag is cleared when one of the following occurs: A) Write “1” to FIFOR B) Write to ATDCTL0,1,2,3,4, ATDCMPE or ATDCMPHT (a conversion sequence is aborted) C) Write to ATDCTL5 (a new conversion sequence is started) 0 No overrun has occurred 1 Overrun condition exists (result register has been written while associated CCFx flag was still set)

Table 16-16. ATDSTAT0 Field Descriptions (continued)

Field	Description
3–0 CC[3:0]	**Conversion Counter** — These 4 read-only bits are the binary value of the conversion counter. The conversion counter points to the result register that will receive the result of the current conversion. E.g. CC3=0, CC2=1, CC1=1, CC0=0 indicates that the result of the current conversion will be in ATD Result Register 6. If in non-FIFO mode (FIFO=0) the conversion counter is initialized to zero at the beginning and end of the conversion sequence. If in FIFO mode (FIFO=1) the register counter is not initialized. The conversion counter wraps around when its maximum value is reached. Aborting a conversion or starting a new conversion clears the conversion counter even if FIFO=1.

16.3.2.8 ATD Compare Enable Register (ATDCMPE)

Writes to this register will abort current conversion sequence.

Read: Anytime

Write: Anytime

Module Base + 0x0008

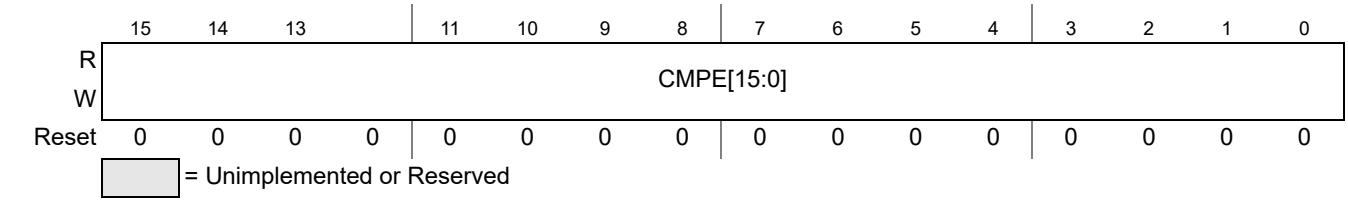

Figure 16-10. ATD Compare Enable Register (ATDCMPE)

Table 16-17. ATDCMPE Field Descriptions

Field	Description
15–0 CMPE[15:0]	**Compare Enable for Conversion Number *n* (*n*= 15, 14, 13, 12, 11, 10, 9, 8, 7, 6, 5, 4, 3, 2, 1, 0) of a Sequence (*n conversion number, NOT channel number!)*** — These bits enable automatic compare of conversion results individually for conversions of a sequence. The sense of each comparison is determined by the CMPHT[*n*] bit in the ATDCMPHT register. For each conversion number with CMPE[*n*]=1 do the following: 1) Write compare value to ATDDR*n* result register 2) Write compare operator with CMPHT[*n*] in ATDCPMHT register CCF[*n*] in ATDSTAT2 register will flag individual success of any comparison. 0 No automatic compare 1 Automatic compare of results for conversion *n* of a sequence is enabled.

16.3.2.9 ATD Status Register 2 (ATDSTAT2)

This read-only register contains the Conversion Complete Flags CCF[15:0].

Module Base + 0x000A

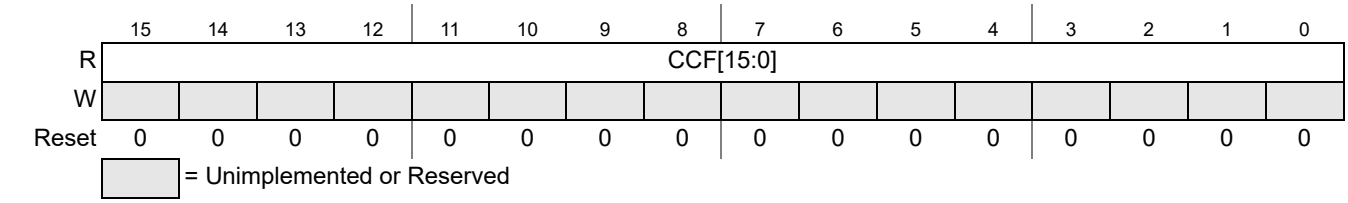

Figure 16-11. ATD Status Register 2 (ATDSTAT2)

Read: Anytime

Write: Anytime (for details see Table 16-18 below)

Table 16-18. ATDSTAT2 Field Descriptions

Field	Description
15–0 CCF[15:0]	**Conversion Complete Flag *n* (*n*= 15, 14, 13, 12, 11, 10, 9, 8, 7, 6, 5, 4, 3, 2, 1, 0) (*n conversion number, NOT channel number!)***— A conversion complete flag is set at the end of each conversion in a sequence. The flags are associated with the conversion position in a sequence (and also the result register number). Therefore in non-fifo mode, CCF[4] is set when the fifth conversion in a sequence is complete and the result is available in result register ATDDR4; CCF[5] is set when the sixth conversion in a sequence is complete and the result is available in ATDDR5, and so forth. If automatic compare of conversion results is enabled (CMPE[*n*]=1 in ATDCMPE), the conversion complete flag is only set if comparison with ATDDR*n* is true. If ACMPIE=1 a compare interrupt will be requested. In this case, as the ATDDR*n* result register is used to hold the compare value, the result will not be stored there at the end of the conversion but is lost. A flag CCF[*n*] is cleared when one of the following occurs: A) Write to ATDCTL5 (a new conversion sequence is started) B) If AFFC=0, write “1” to CCF[*n*] C) If AFFC=1 and CMPE[*n*]=0, read of result register ATDDR*n* D) If AFFC=1 and CMPE[*n*]=1, write to result register ATDDR*n* In case of a concurrent set and clear on CCF[*n*]: The clearing by method A) will overwrite the set. The clearing by methods B) or C) or D) will be overwritten by the set. 0 Conversion number *n* not completed or successfully compared 1 If (CMPE[*n*]=0): Conversion number *n* has completed. Result is ready in ATDDR*n*. If (CMPE[*n*]=1): Compare for conversion result number *n* with compare value in ATDDR*n*, using compare operator CMPGT[*n*] is true. (No result available in ATDDR*n*)

16.3.2.10 ATD Input Enable Register (ATDDIEN)

Module Base + 0x000C

	15	14	13	12	11	10	9	8	7	6	5	4	3	2	1	0
R W	IEN[15:0]															
Reset	0	0	0	0	0	0	0	0	0	0	0	0	0	0	0	0

= Unimplemented or Reserved

Figure 16-12. ATD Input Enable Register (ATDDIEN)

Read: Anytime

Write: Anytime

Table 16-19. ATDDIEN Field Descriptions

Field	Description
15–0 IEN[15:0]	**ATD Digital Input Enable on channel *x* (*x*= 15, 14, 13, 12, 11, 10, 9, 8, 7, 6, 5, 4, 3, 2, 1, 0)** — This bit controls the digital input buffer from the analog input pin (AN*x*) to the digital data register. 0 Disable digital input buffer to AN*x* pin 1 Enable digital input buffer on AN*x* pin. **Note:** Setting this bit will enable the corresponding digital input buffer continuously. If this bit is set while simultaneously using it as an analog port, there is potentially increased power consumption because the digital input buffer maybe in the linear region.

16.3.2.11 ATD Compare Higher Than Register (ATDCMPHT)

Writes to this register will abort current conversion sequence.

Read: Anytime

Write: Anytime

Module Base + 0x000E

	15	14	13	12	11	10	9	8	7	6	5	4	3	2	1	0
R W	CMPHT[15:0]															
Reset	0	0	0	0	0	0	0	0	0	0	0	0	0	0	0	0

= Unimplemented or Reserved

Figure 16-13. ATD Compare Higher Than Register (ATDCMPHT)

Table 16-20. ATDCMPHT Field Descriptions

Field	Description
15–0 CMPHT[15:0]	**Compare Operation Higher Than Enable for conversion number *n* (*n*= 15, 14, 13, 12, 11, 10, 9, 8, 7, 6, 5, 4, 3, 2, 1, 0) of a Sequence (*n conversion number, NOT channel number!)*** — This bit selects the operator for comparison of conversion results. 0 If result of conversion *n* is **lower or same than** compare value in ATDDR*n*, this is flagged in ATDSTAT2 1 If result of conversion *n* is **higher than** compare value in ATDDR*n*, this is flagged in ATDSTAT2

16.3.2.12 ATD Conversion Result Registers (ATDDR*n*)

The A/D conversion results are stored in 16 result registers. Results are always in unsigned data representation. Left and right justification is selected using the DJM control bit in ATDCTL3.

If automatic compare of conversions results is enabled (CMPE[*n*]=1 in ATDCMPE), these registers must be written with the compare values in left or right justified format depending on the actual value of the DJM bit. In this case, as the ATDDR*n* register is used to hold the compare value, the result will not be stored there at the end of the conversion but is lost.

Attention, n is the conversion number, NOT the channel number!

Read: Anytime

Write: Anytime

NOTE

For conversions not using automatic compare, results are stored in the result registers after each conversion. In this case avoid writing to ATDDRn except for initial values, because an A/D result might be overwritten.

16.3.2.12.1 Left Justified Result Data (DJM=0)

Module Base +
0x0010 = ATDDR0, 0x0012 = ATDDR1, 0x0014 = ATDDR2, 0x0016 = ATDDR3
0x0018 = ATDDR4, 0x001A = ATDDR5, 0x001C = ATDDR6, 0x001E = ATDDR7
0x0020 = ATDDR8, 0x0022 = ATDDR9, 0x0024 = ATDDR10, 0x0026 = ATDDR11
0x0028 = ATDDR12, 0x002A = ATDDR13, 0x002C = ATDDR14, 0x002E = ATDDR15

	15	14	13	12	11	10	9	8	7	6	5	4	3	2	1	0
R	Result-Bit[11:0]												0	0	0	0
W																
Reset	0	0	0	0	0	0	0	0	0	0	0	0	0	0	0	0

= Unimplemented or Reserved

Figure 16-14. Left justified ATD conversion result register (ATDDR*n*)

Table 16-21 shows how depending on the A/D resolution the conversion result is transferred to the ATD result registers for left justified data. Compare is always done using all 12 bits of both the conversion result and the compare value in ATDDRn.

Table 16-21. Conversion result mapping to ATDDRn

A/D resolution	DJM	conversion result mapping to ATDDR*n*
8-bit data	0	Result-Bit[11:4] = conversion result, Result-Bit[3:0]=0000
10-bit data	0	Result-Bit[11:2] = conversion result, Result-Bit[1:0]=00
12-bit data	0	Result-Bit[11:0] = result

16.3.2.12.2 Right Justified Result Data (DJM=1)

Module Base +
0x0010 = ATDDR0, 0x0012 = ATDDR1, 0x0014 = ATDDR2, 0x0016 = ATDDR3
0x0018 = ATDDR4, 0x001A = ATDDR5, 0x001C = ATDDR6, 0x001E = ATDDR7
0x0020 = ATDDR8, 0x0022 = ATDDR9, 0x0024 = ATDDR10, 0x0026 = ATDDR11
0x0028 = ATDDR12, 0x002A = ATDDR13, 0x002C = ATDDR14, 0x002E = ATDDR15

	15	14	13	12	11	10	9	8	7	6	5	4	3	2	1	0
R	0	0	0	0	Result-Bit[11:0]											
W																
Reset	0	0	0	0	0	0	0	0	0	0	0	0	0	0	0	0

= Unimplemented or Reserved

Figure 16-15. Right justified ATD conversion result register (ATDDR*n*)

Table 16-22 shows how depending on the A/D resolution the conversion result is transferred to the ATD result registers for right justified data. Compare is always done using all 12 bits of both the conversion result and the compare value in ATDDRn.

Table 16-22. Conversion result mapping to ATDDRn

A/D resolution	DJM	conversion result mapping to ATDDR*n*
8-bit data	1	Result-Bit[7:0] = result, Result-Bit[11:8]=0000
10-bit data	1	Result-Bit[9:0] = result, Result-Bit[11:10]=00
12-bit data	1	Result-Bit[11:0] = result

16.4 Functional Description

The ADC12B16C consists of an analog sub-block and a digital sub-block.

16.4.1 Analog Sub-Block

The analog sub-block contains all analog electronics required to perform a single conversion. Separate power supplies VDDA and VSSA allow to isolate noise of other MCU circuitry from the analog sub-block.

16.4.1.1 Sample and Hold Machine

The Sample and Hold Machine controls the storage and charge of the sample capacitor to the voltage level of the analog signal at the selected ADC input channel.

During the sample process the analog input connects directly to the storage node.

The input analog signals are unipolar and must be within the potential range of VSSA to VDDA.

During the hold process the analog input is disconnected from the storage node.

16.4.1.2 Analog Input Multiplexer

The analog input multiplexer connects one of the 16 external analog input channels to the sample and hold machine.

16.4.1.3 Analog-to-Digital (A/D) Machine

The A/D Machine performs analog to digital conversions. The resolution is program selectable to be either 8 or 10 or 12 bits. The A/D machine uses a successive approximation architecture. It functions by comparing the sampled and stored analog voltage with a series of binary coded discrete voltages.

By following a binary search algorithm, the A/D machine identifies the discrete voltage that is nearest to the sampled and stored voltage.

When not converting the A/D machine is automatically powered down.

Only analog input signals within the potential range of VRL to VRH (A/D reference potentials) will result in a non-railed digital output code.

16.4.2 Digital Sub-Block

This subsection describes some of the digital features in more detail. See Section 16.3.2, “Register Descriptions” for all details.

16.4.2.1 External Trigger Input

The external trigger feature allows the user to synchronize ATD conversions to an external event rather than relying only on software to trigger the ATD module when a conversion is about to take place. The external trigger signal (out of reset ATD channel 15, configurable in ATDCTL1) is programmable to be

edge or level sensitive with polarity control. Table 16-23 gives a brief description of the different combinations of control bits and their effect on the external trigger function.

In order to avoid maybe false trigger events please enable the external digital input via ATDDIEN register first and in the following enable the external trigger mode by bit ETRIGE.

Table 16-23. External Trigger Control Bits

ETRIGLE	ETRIGP	ETRIGE	SCAN	Description
X	X	0	0	Ignores external trigger. Performs one conversion sequence and stops.
X	X	0	1	Ignores external trigger. Performs continuous conversion sequences.
0	0	1	X	Trigger falling edge sensitive. Performs one conversion sequence per trigger.
0	1	1	X	Trigger rising edge sensitive. Performs one conversion sequence per trigger.
1	0	1	X	Trigger low level sensitive. Performs continuous conversions while trigger level is active.
1	1	1	X	Trigger high level sensitive. Performs continuous conversions while trigger level is active.

In either level or edge sensitive mode, the first conversion begins when the trigger is received.

Once ETRIGE is enabled a conversion must be triggered externally after writing to ATDCTL5 register.

During a conversion in edge sensitive mode, if additional trigger events are detected the overrun error flag ETORF is set.

If level sensitive mode is active and the external trigger de-asserts and later asserts again during a conversion sequence, this does not constitute an overrun. Therefore, the flag is not set. If the trigger is left active in level sensitive mode when a sequence is about to complete, another sequence will be triggered immediately.

16.4.2.2 General-Purpose Digital Port Operation

Each ATD input pin can be switched between analog or digital input functionality. An analog multiplexer makes each ATD input pin selected as analog input available to the A/D converter.

The pad of the ATD input pin is always connected to the analog input channel of the analog mulitplexer.

Each pad input signal is buffered to the digital port register.

This buffer can be turned on or off with the ATDDIEN register for each ATD input pin.
This is important so that the buffer does not draw excess current when an ATD input pin is selected as analog input to the ADC12B16C.

16.5 Resets

At reset the ADC12B16C is in a power down state. The reset state of each individual bit is listed within the Register Description section (see Section 16.3.2, “Register Descriptions”) which details the registers and their bit-field.

16.6 Interrupts

The interrupts requested by the ADC12B16C are listed in Table 16-24. Refer to MCU specification for related vector address and priority.

Table 16-24. ATD Interrupt Vectors

Interrupt Source	CCR Mask	Local Enable
Sequence Complete Interrupt	I bit	ASCIE in ATDCTL2
Compare Interrupt	I bit	ACMPIE in ATDCTL2

See Section 16.3.2, “Register Descriptions” for further details.

Chapter 17
Digital Analog Converter (DAC_8B5V)

17.1 Revision History

Table 17-1. Revision History Table

Rev. No. (Item No.)	Data	Sections Affected	Substantial Change(s)
1.0	12-Apr.-10	1.4.2.1	Added DACCTL register bit DACDIEN
1.01	04-May-10,	Table 1.2, Section 1.4	Replaced VRL,VRL with variable correct wrong figure, table numbering
1.02	12-May-10	Section 1.4	replaced ipt_test_mode with ips_test_access new description/address of DACDEBUG register
1.1	25-May-10	17.4.2.1	Removed DACCTL register bit DACDIEN
1.2	25-Jun.-10	17.4	Correct table and figure title format
1.3	29-Jul.-10	17.2	Fixed typos
1.4	17-Nov.-10	17.2.2	Update the behavior of the DACU pin during stop mode
1.5	29-Aug.-13	17.2.2, 17.3	added note about settling time added link to DACM register inside section 17.3

Glossary

Table 17-2. Terminology

Term	Meaning
DAC	Digital to Analog Converter
VRL	Low Reference Voltage
VRH	High Reference Voltage
FVR	Full Voltage Range
SSC	Special Single Chip

17.2 Introduction

The DAC_8B5V module is a digital to analog converter. The converter works with a resolution of 8 bit and generates an output voltage between VRL and VRH.

The module consists of configuration registers and two analog functional units, a DAC resistor network and an operational amplifier.

The configuration registers provide all required control bits for the DAC resistor network and for the operational amplifier.

The DAC resistor network generates the desired analog output voltage. The unbuffered voltage from the DAC resistor network output can be routed to the external DACU pin. When enabled, the buffered voltage from the operational amplifier output is available on the external AMP pin.

The operational amplifier is also stand alone usable.

Figure 17-1 shows the block diagram of the DAC_8B5V module.

17.2.1 Features

The DAC_8B5V module includes these distinctive features:

- 1 digital-analog converter channel with:
  - 8 bit resolution
  - full and reduced output voltage range
  - buffered or unbuffered analog output voltage usable
- operational amplifier stand alone usable

17.2.2 Modes of Operation

The DAC_8B5V module behaves as follows in the system power modes:

1. CPU run mode

   The functionality of the DAC_8B5V module is available.

2. CPU stop mode

   Independent from the mode settings, the operational amplifier is disabled, switch S1 and S2 are open.

   If the “Unbuffered DAC” mode was used before entering stop mode, then the DACU pin will reach VRH voltage level during stop mode.

   The content of the configuration registers is unchanged.

NOTE

After enabling and after return from CPU stop mode, the DAC_8B5V module needs a settling time to get fully operational, see Settling time specification of dac_8b5V_analog_ll18.

17.2.3 Block Diagram

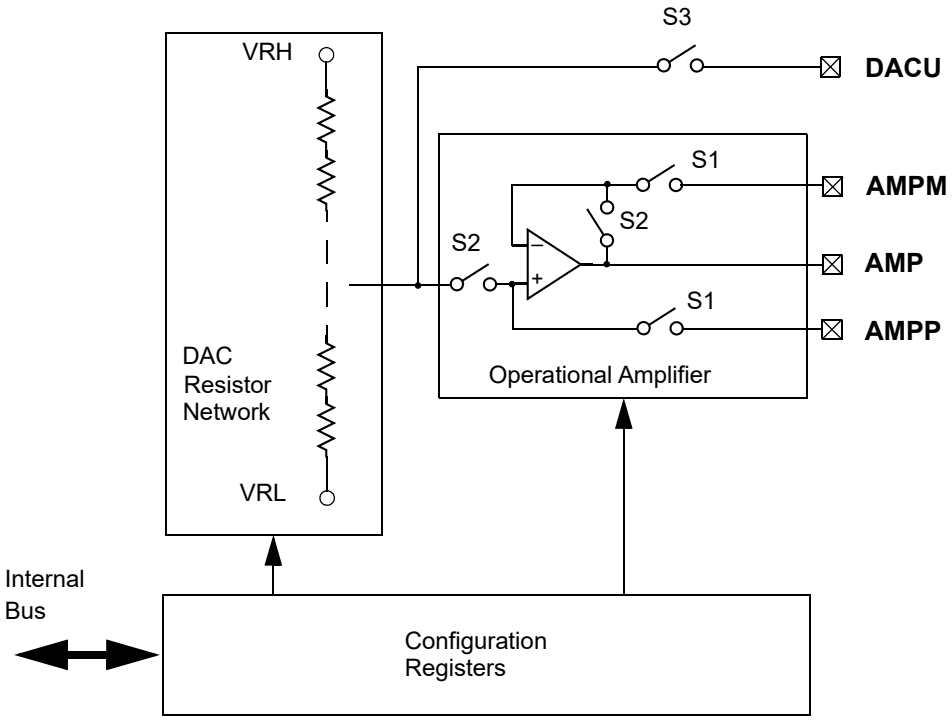

Figure 17-1. DAC_8B5V Block Diagram

17.3 External Signal Description

This section lists the name and description of all external ports.

17.3.1 DACU Output Pin

This analog pin drives the unbuffered analog output voltage from the DAC resistor network output, if the according mode is selected, see register bit DACM[2:0].

17.3.2 AMP Output Pin

This analog pin is used for the buffered analog output voltage from the operational amplifier output, if the according mode is selected, see register bit DACM[2:0].

17.3.3 AMPP Input Pin

This analog input pin is used as input signal for the operational amplifier positive input pin, if the according mode is selected, see register bit DACM[2:0].

17.3.4 AMPM Input Pin

This analog pin is used as input for the operational amplifier negative input pin, if the according mode is selected, see register bit DACM[2:0].

17.4 Memory Map and Register Definition

This sections provides the detailed information of all registers for the DAC_8B5V module.

17.4.1 Register Summary

Figure 17-2 shows the summary of all implemented registers inside the DAC_8B5V module.

NOTE

Register Address = Module Base Address + Address Offset, where the Module Base Address is defined at the MCU level and the Address Offset is defined at the module level.

Address Offset Register Name		Bit 7	6	5	4	3	2	1	Bit 0
0x0000 DACCTL	R	FVR	DRIVE	0	0	0	DACM[2:0]		
	W								
0x0001 Reserved	R	0	0	0	0	0	0	0	0
	W								
0x0002 DACVOL	R	VOLTAGE[7:0]							
	W								
0x0003 - 0x0006 Reserved	R	0	0	0	0	0	0	0	0
	W								
0x0007 Reserved	R	Reserved	Reserved	Reserved	Reserved	Reserved	Reserved	Reserved	Reserved
	W								
0x0007 DACDEBUG	R	0	BUF_EN	DAC_EN	S3	S2n	S2p	S1n	S1p
	W								

= Unimplemented

Figure 17-2. DAC_8B5V Register Summaryfv_dac_8b5v_RESERVED

17.4.2 Register Descriptions

This section consists of register descriptions in address order. Each description includes a standard register diagram with an associated figure number. Details of register bit and field function follow the register diagrams, in bit order.

17.4.2.1 Control Register (DACCTL)

Module Base + 0x0000 — Access: User read/write[1]

	7	6	5	4	3	2	1	0
R	FVR	DRIVE	0	0	0	DACM[2:0]		
W								
Reset	1	0	0	0	0	0	0	0

= Unimplemented

Figure 17-3. Control Register (DACCTL)

[1] Read: Anytime
Write: Anytime

Table 17-3. DACCTL Field Description

Field	Description
7 FVR	**Full Voltage Range** — This bit defines the voltage range of the DAC. 0 DAC resistor network operates with the reduced voltage range 1 DAC resistor network operates with the full voltage range **Note:** For more details see Section 17.5.7, “Analog output voltage calculation”.
6 DRIVE	**Drive Select** — This bit selects the output drive capability of the operational amplifier, see electrical Spec. for more details. 0 Low output drive for high resistive loads 1 High output drive for low resistive loads
2:0 DACM[2:0]	**Mode Select** — These bits define the mode of the DAC. A write access with an unsupported mode will be ignored. 000 Off 001 Operational Amplifier 100 Unbuffered DAC 101 Unbuffered DAC with Operational Amplifier 111 Buffered DAC other Reserved

17.4.2.2 Analog Output Voltage Level Register (DACVOL)

Module Base + 0x0002 Access: User read/write[1]

	7	6	5	4	3	2	1	0
R W	VOLTAGE[7:0]							
Reset	0	0	0	0	0	0	0	0

Figure 17-4. Analog Output Voltage Level Register (DACVOL)

1 Read: Anytime
Write: Anytime

Table 17-4. DACVOL Field Description

Field	Description
7:0 VOLTAGE[7:0]	**VOLTAGE** — This register defines (together with the FVR bit) the analog output voltage. For more detail see Equation 17-1 and Equation 17-2.

17.4.2.3 Reserved Register

Module Base + 0x0007 Access: User read/write[1]

	7	6	5	4	3	2	1	0
R W	Reserved	Reserved	Reserved	Reserved	Reserved	Reserved	Reserved	Reserved
Reset	x	x	x	x	x	x	x	x

Figure 17-5. Reserved Registerfv_dac_8b5v_RESERVED

1 Read: Anytime
Write: Only in special mode

17.5 Functional Description

17.5.1 Functional Overview

The DAC resistor network and the operational amplifier can be used together or stand alone. Following modes are supported:

Table 17-5. DAC Modes of Operation

DACM[2:0]		Description			
		Submodules		Output	
		DAC resistor network	Operational Amplifier	DACU	AMP
Off	000	disabled	disabled	disconnected	disconnected

Table 17-5. DAC Modes of Operation

Operational amplifier	001	disabled	enabled	disabled	depend on AMPP and AMPM input
Unbuffered DAC	100	enabled	disabled	unbuffered resistor output voltage	disconnected
Unbuffered DAC with Operational amplifier	101	enabled	enabled	unbuffered resistor output voltage	depend on AMPP and AMPM input
Buffered DAC	111	enabled	enabled	disconnected	buffered resistor output voltage

The DAC resistor network itself can work on two different voltage ranges:

Table 17-6. DAC Resistor Network Voltage ranges

DAC Mode	Description
Full Voltage Range (FVR)	DAC resistor network provides a output voltage over the complete input voltage range, default after reset
Reduced Voltage Range	DAC resistor network provides a output voltage over a reduced input voltage range

Table 17-7 shows the control signal decoding for each mode. For more detailed mode description see the sections below.

Table 17-7. DAC Control Signals

DACM		DAC resistor network	Operational Amplifier	Switch S1	Switch S2	Switch S3
Off	000	disabled	disabled	open	open	open
Operational amplifier	001	disabled	enabled	closed	open	open
Unbuffered DAC	100	enabled	disabled	open	open	closed
Unbuffered DAC with Operational amplifier	101	enabled	enabled	closed	open	closed
Buffered DAC	111	enabled	enabled	open	closed	open

17.5.2 Mode “Off”

The “Off” mode is the default mode after reset and is selected by DACCTL.DACM[2:0] = 0x0. During this mode the DAC resistor network and the operational amplifier are disabled and all switches are open. This mode provides the lowest power consumption. For decoding of the control signals see Table 17-7.

17.5.3 Mode “Operational Amplifier”

The “Operational Amplifier” mode is selected by DACCTL.DACM[2:0] = 0x1. During this mode the operational amplifier can be used independent from the DAC resister network. All required amplifier signals, AMP, AMPP and AMPM are available on the pins. The DAC resistor network output is disconnected from the DACU pin. The connection between the amplifier output and the negative amplifier input is open. For decoding of the control signals see Table 17-7.

17.5.4 Mode “Unbuffered DAC”

The “Unbuffered DAC” mode is selected by DACCNTL.DACM[2:0] = 0x4. During this mode the unbuffered analog voltage from the DAC resistor network output is available on the DACU output pin. The operational amplifier is disabled and the operational amplifier signals are disconnected from the AMP pins. For decoding of the control signals see Table 17-7.

17.5.5 Mode “Unbuffered DAC with Operational Amplifier”

The “Unbuffered DAC with Operational Amplifier” mode is selected by DACCTL.DACM[2:0] = 0x5. During this mode the DAC resistor network and the operational amplifier are enabled and usable independent from each other. The unbuffered analog voltage from the DAC resistor network output is available on the DACU output pin.

The operational amplifier is disconnected from the DAC resistor network. All required amplifier signals, AMP, AMPP and AMPM are available on the pins. The connection between the amplifier output and the negative amplifier input is open. For decoding of the control signals see Table 17-7.

17.5.6 Mode “Buffered DAC”

The “Buffered DAC” mode is selected by DACCTL.DACM[2:0] = 0x7. During this is mode the DAC resistor network and the operational amplifier are enabled. The analog output voltage from the DAC resistor network output is buffered by the operational amplifier and is available on the AMP output pin.

The DAC resistor network output is disconnected from the DACU pin. For the decoding of the control signals see Table 17-7.

17.5.7 Analog output voltage calculation

The DAC can provide an analog output voltage in two different voltage ranges:

- FVR = 0, reduced voltage range

  The DAC generates an analog output voltage inside the range from 0.1 x (VRH - VRL) + VRL to 0.9 x (VRH-VRL) + VRL with a resolution ((VRH-VRL) x 0.8) / 256, see equation below:

analog output voltage = VOLATGE[7:0] x ((VRH-VRL) x 0.8) / 256) + 0.1 x (VRH-VRL) + VRL ***Eqn. 17-1***

- FVR = 1, full voltage range

  The DAC generates an analog output voltage inside the range from VRL to VRH with a resolution (VRH-VRL) / 256, see equation below:

analog output voltage = VOLTAGE[7:0] x (VRH-VRL) / 256 +VRL ***Eqn. 17-2***

See Table 17-8 for an example for VRL = 0.0 V and VRH = 5.0 V.

Table 17-8. Analog output voltage calculation

FVR	min. voltage	max. voltage	Resolution	Equation
0	0.5V	4.484V	15.625mV	VOLTAGE[7:0] x (4.0V) / 256) + 0.5V
1	0.0V	4.980V	19.531mV	VOLTAGE[7:0] x (5.0V) / 256

Chapter 18
Scalable Controller Area Network (S12MSCANV3)

Table 18-1. Revision History

Revision Number	Revision Date	Sections Affected	Description of Changes
V03.13	03 Mar 2011	Figure 18-4 Table 18-3	• Corrected CANE write restrictions • Removed footnote from RXFRM bit
V03.14	12 Nov 2012	Table 18-11	• Corrected RxWRN and TxWRN threshold values
V03.15	12 Jan 2013	Table 18-3 Table 18-26 Figure 18-37 18.1/18-569 18.3.2.15/18-590	• Updated TIME bit description • Added register names to buffer map • Updated TSRH and TSRL read conditions • Updated introduction • Updated CANTXERR and CANRXERR register notes

18.1 Introduction

NXP's scalable controller area network (S12MSCANV3) definition is based on the MSCAN12 definition, which is the specific implementation of the MSCAN concept targeted for the S12, S12X and S12Z microcontroller families.

The module is a communication controller implementing the CAN 2.0A/B protocol as defined in the Bosch specification dated September 1991. For users to fully understand the MSCAN specification, it is recommended that the Bosch specification be read first to familiarize the reader with the terms and concepts contained within this document.

Though not exclusively intended for automotive applications, CAN protocol is designed to meet the specific requirements of a vehicle serial data bus: real-time processing, reliable operation in the EMI environment of a vehicle, cost-effectiveness, and required bandwidth.

MSCAN uses an advanced buffer arrangement resulting in predictable real-time behavior and simplified application software.

18.1.1 Glossary

Table 18-2. Terminology

ACK	Acknowledge of CAN message
CAN	Controller Area Network
CRC	Cyclic Redundancy Code
EOF	End of Frame
FIFO	First-In-First-Out Memory
IFS	Inter-Frame Sequence
SOF	Start of Frame
CPU bus	CPU related read/write data bus
CAN bus	CAN protocol related serial bus
oscillator clock	Direct clock from external oscillator
bus clock	CPU bus related clock
CAN clock	CAN protocol related clock

18.1.2 Block Diagram

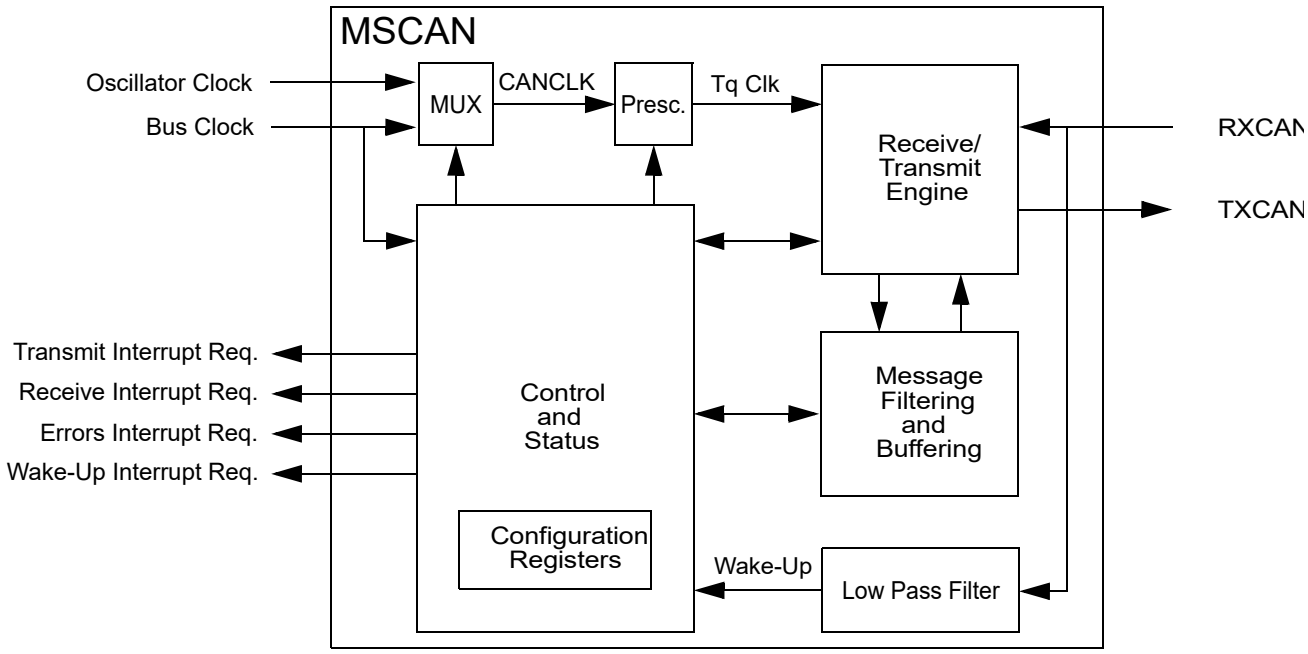

Figure 18-1. MSCAN Block Diagram

18.1.3 Features

The basic features of the MSCAN are as follows:

- Implementation of the CAN protocol — Version 2.0A/B
  - — Standard and extended data frames
  - — Zero to eight bytes data length
  - — Programmable bit rate up to 1 Mbps[1]
  - — Support for remote frames
- Five receive buffers with FIFO storage scheme
- Three transmit buffers with internal prioritization using a “local priority” concept
- Flexible maskable identifier filter supports two full-size (32-bit) extended identifier filters, or four 16-bit filters, or eight 8-bit filters
- Programmable wake-up functionality with integrated low-pass filter
- Programmable loopback mode supports self-test operation
- Programmable listen-only mode for monitoring of CAN bus
- Programmable bus-off recovery functionality
- Separate signalling and interrupt capabilities for all CAN receiver and transmitter error states (warning, error passive, bus-off)
- Programmable MSCAN clock source either bus clock or oscillator clock
- Internal timer for time-stamping of received and transmitted messages
- Three low-power modes: sleep, power down, and MSCAN enable
- Global initialization of configuration registers

18.1.4 Modes of Operation

For a description of the specific MSCAN modes and the module operation related to the system operating modes refer to Section 18.4.4, “Modes of Operation”.

18.2 External Signal Description

The MSCAN uses two external pins.

NOTE

On MCUs with an integrated CAN physical interface (transceiver) the MSCAN interface is connected internally to the transceiver interface. In these cases the external availability of signals TXCAN and RXCAN is optional.

18.2.1 RXCAN — CAN Receiver Input Pin

RXCAN is the MSCAN receiver input pin.

1. Depending on the actual bit timing and the clock jitter of the PLL.

18.2.2 TXCAN — CAN Transmitter Output Pin

TXCAN is the MSCAN transmitter output pin. The TXCAN output pin represents the logic level on the CAN bus:

0 = Dominant state
1 = Recessive state

18.2.3 CAN System

A typical CAN system with MSCAN is shown in Figure 18-2. Each CAN station is connected physically to the CAN bus lines through a transceiver device. The transceiver is capable of driving the large current needed for the CAN bus and has current protection against defective CAN or defective stations.

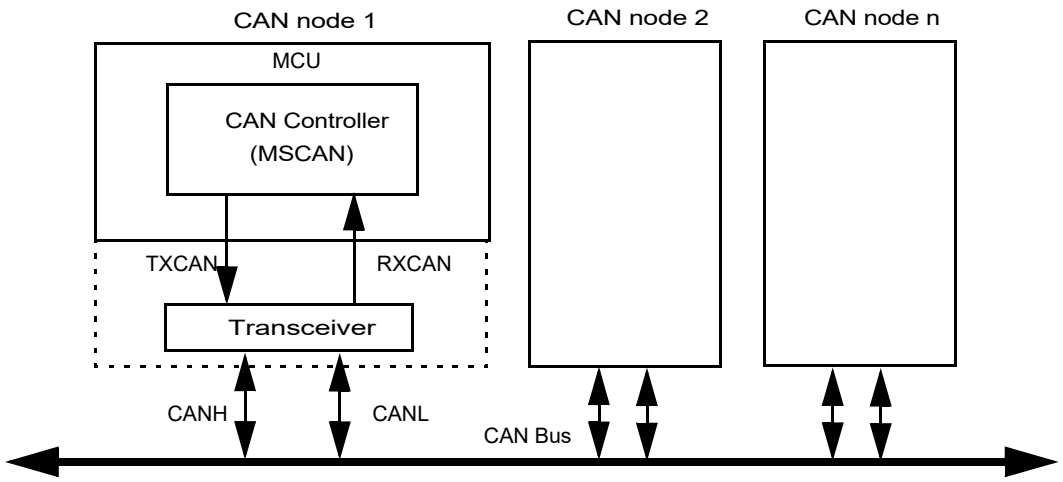

Figure 18-2. CAN System

18.3 Memory Map and Register Definition

This section provides a detailed description of all registers accessible in the MSCAN.

18.3.1 Module Memory Map

Figure 18-3 gives an overview on all registers and their individual bits in the MSCAN memory map. The *register address* results from the addition of *base address* and *address offset*. The *base address* is determined at the MCU level and can be found in the MCU memory map description. The *address offset* is defined at the module level.

The MSCAN occupies 64 bytes in the memory space. The base address of the MSCAN module is determined at the MCU level when the MCU is defined. The register decode map is fixed and begins at the first address of the module address offset.

The detailed register descriptions follow in the order they appear in the register map.

Register Name		Bit 7	6	5	4	3	2	1	Bit 0
0x0000 CANCTL0	R	RXFRM	RXACT	CSWAI	SYNCH	TIME	WUPE	SLPRQ	INITRQ
	W								
0x0001 CANCTL1	R	CANE	CLKSRC	LOOPB	LISTEN	BORM	WUPM	SLPAK	INITAK
	W								
0x0002 CANBTR0	R	SJW1	SJW0	BRP5	BRP4	BRP3	BRP2	BRP1	BRP0
	W								
0x0003 CANBTR1	R	SAMP	TSEG22	TSEG21	TSEG20	TSEG13	TSEG12	TSEG11	TSEG10
	W								
0x0004 CANRFLG	R	WUPIF	CSCIF	RSTAT1	RSTAT0	TSTAT1	TSTAT0	OVRIF	RXF
	W								
0x0005 CANRIER	R	WUPIE	CSCIE	RSTATE1	RSTATE0	TSTATE1	TSTATE0	OVRIE	RXFIE
	W								
0x0006 CANTFLG	R	0	0	0	0	0	TXE2	TXE1	TXE0
	W								
0x0007 CANTIER	R	0	0	0	0	0	TXEIE2	TXEIE1	TXEIE0
	W								
0x0008 CANTARQ	R	0	0	0	0	0	ABTRQ2	ABTRQ1	ABTRQ0
	W								
0x0009 CANTAAK	R	0	0	0	0	0	ABTAK2	ABTAK1	ABTAK0
	W								
0x000A CANTBSEL	R	0	0	0	0	0	TX2	TX1	TX0
	W								
0x000B CANIDAC	R	0	0	IDAM1	IDAM0	0	IDHIT2	IDHIT1	IDHIT0
	W								
0x000C Reserved	R	0	0	0	0	0	0	0	0
	W								
0x000D CANMISC	R	0	0	0	0	0	0	0	BOHOLD
	W								

= Unimplemented or Reserved

Figure 18-3. MSCAN Register Summary

Register Name		Bit 7	6	5	4	3	2	1	Bit 0
0x000E CANRXERR	R	RXERR7	RXERR6	RXERR5	RXERR4	RXERR3	RXERR2	RXERR1	RXERR0
	W								
0x000F CANTXERR	R	TXERR7	TXERR6	TXERR5	TXERR4	TXERR3	TXERR2	TXERR1	TXERR0
	W								
0x0010–0x0013 CANIDAR0–3	R	AC7	AC6	AC5	AC4	AC3	AC2	AC1	AC0
	W								
0x0014–0x0017 CANIDMRx	R	AM7	AM6	AM5	AM4	AM3	AM2	AM1	AM0
	W								
0x0018–0x001B CANIDAR4–7	R	AC7	AC6	AC5	AC4	AC3	AC2	AC1	AC0
	W								
0x001C–0x001F CANIDMR4–7	R	AM7	AM6	AM5	AM4	AM3	AM2	AM1	AM0
	W								
0x0020–0x002F CANRXFG	R	See Section 18.3.3, “Programmer’s Model of Message Storage”							
	W								
0x0030–0x003F CANTXFG	R	See Section 18.3.3, “Programmer’s Model of Message Storage”							
	W								

= Unimplemented or Reserved

Figure 18-3. MSCAN Register Summary (continued)

18.3.2 Register Descriptions

This section describes in detail all the registers and register bits in the MSCAN module. Each description includes a standard register diagram with an associated figure number. Details of register bit and field function follow the register diagrams, in bit order. All bits of all registers in this module are completely synchronous to internal clocks during a register read.

18.3.2.1 MSCAN Control Register 0 (CANCTL0)

The CANCTL0 register provides various control bits of the MSCAN module as described below.

Module Base + 0x0000 Access: User read/write[1]

	7	6	5	4	3	2	1	0
R	RXFRM	RXACT	CSWAI	SYNCH	TIME	WUPE	SLPRQ	INITRQ
W								
Reset:	0	0	0	0	0	0	0	1

= Unimplemented

Figure 18-4. MSCAN Control Register 0 (CANCTL0)

[1] Read: Anytime
Write: Anytime when out of initialization mode; exceptions are read-only RXACT and SYNCH, RXFRM (which is set by the module only), and INITRQ (which is also writable in initialization mode)

NOTE

The CANCTL0 register, except WUPE, INITRQ, and SLPRQ, is held in the reset state when the initialization mode is active (INITRQ = 1 and INITAK = 1). This register is writable again as soon as the initialization mode is exited (INITRQ = 0 and INITAK = 0).

Table 18-3. CANCTL0 Register Field Descriptions

Field	Description
7 RXFRM	**Received Frame Flag** — This bit is read and clear only. It is set when a receiver has received a valid message correctly, independently of the filter configuration. After it is set, it remains set until cleared by software or reset. Clearing is done by writing a 1. Writing a 0 is ignored. This bit is not valid in loopback mode. 0 No valid message was received since last clearing this flag 1 A valid message was received since last clearing of this flag
6 RXACT	**Receiver Active Status** — This read-only flag indicates the MSCAN is receiving a message[1]. The flag is controlled by the receiver front end. This bit is not valid in loopback mode. 0 MSCAN is transmitting or idle 1 MSCAN is receiving a message (including when arbitration is lost)
5 CSWAI[2]	**CAN Stops in Wait Mode** — Enabling this bit allows for lower power consumption in wait mode by disabling all the clocks at the CPU bus interface to the MSCAN module. 0 The module is not affected during wait mode 1 The module ceases to be clocked during wait mode
4 SYNCH	**Synchronized Status** — This read-only flag indicates whether the MSCAN is synchronized to the CAN bus and able to participate in the communication process. It is set and cleared by the MSCAN. 0 MSCAN is not synchronized to the CAN bus 1 MSCAN is synchronized to the CAN bus
3 TIME	**Timer Enable** — This bit activates an internal 16-bit wide free running timer which is clocked by the bit clock rate. If the timer is enabled, a 16-bit time stamp will be assigned to each transmitted/received message within the active TX/RX buffer. Right after the EOF of a valid message on the CAN bus, the time stamp is written to the highest bytes (0x000E, 0x000F) in the appropriate buffer (see Section 18.3.3, “Programmer’s Model of Message Storage”). In loopback mode no receive timestamp is generated. The internal timer is reset (all bits set to 0) when disabled. This bit is held low in initialization mode. 0 Disable internal MSCAN timer 1 Enable internal MSCAN timer

Table 18-3. CANCTL0 Register Field Descriptions (continued)

Field	Description
2 WUPE[3]	**Wake-Up Enable** — This configuration bit allows the MSCAN to restart from sleep mode or from power down mode (entered from sleep) when traffic on CAN is detected (see Section 18.4.5.5, “MSCAN Sleep Mode”). This bit must be configured before sleep mode entry for the selected function to take effect. 0 Wake-up disabled — The MSCAN ignores traffic on CAN 1 Wake-up enabled — The MSCAN is able to restart
1 SLPRQ[4]	**Sleep Mode Request** — This bit requests the MSCAN to enter sleep mode, which is an internal power saving mode (see Section 18.4.5.5, “MSCAN Sleep Mode”). The sleep mode request is serviced when the CAN bus is idle, i.e., the module is not receiving a message and all transmit buffers are empty. The module indicates entry to sleep mode by setting SLPAK = 1 (see Section 18.3.2.2, “MSCAN Control Register 1 (CANCTL1)”). SLPRQ cannot be set while the WUPIF flag is set (see Section 18.3.2.5, “MSCAN Receiver Flag Register (CANRFLG)”). Sleep mode will be active until SLPRQ is cleared by the CPU or, depending on the setting of WUPE, the MSCAN detects activity on the CAN bus and clears SLPRQ itself. 0 Running — The MSCAN functions normally 1 Sleep mode request — The MSCAN enters sleep mode when CAN bus idle
0 INITRQ[5,6]	**Initialization Mode Request** — When this bit is set by the CPU, the MSCAN skips to initialization mode (see Section 18.4.4.5, “MSCAN Initialization Mode”). Any ongoing transmission or reception is aborted and synchronization to the CAN bus is lost. The module indicates entry to initialization mode by setting INITAK = 1 (Section 18.3.2.2, “MSCAN Control Register 1 (CANCTL1)”). The following registers enter their hard reset state and restore their default values: CANCTL0[7], CANRFLG[8], CANRIER[9], CANTFLG, CANTIER, CANTARQ, CANTAAK, and CANTBSEL. The registers CANCTL1, CANBTR0, CANBTR1, CANIDAC, CANIDAR0-7, and CANIDMR0-7 can only be written by the CPU when the MSCAN is in initialization mode (INITRQ = 1 and INITAK = 1). The values of the error counters are not affected by initialization mode. When this bit is cleared by the CPU, the MSCAN restarts and then tries to synchronize to the CAN bus. If the MSCAN is not in bus-off state, it synchronizes after 11 consecutive recessive bits on the CAN bus; if the MSCAN is in bus-off state, it continues to wait for 128 occurrences of 11 consecutive recessive bits. Writing to other bits in CANCTL0, CANRFLG, CANRIER, CANTFLG, or CANTIER must be done only after initialization mode is exited, which is INITRQ = 0 and INITAK = 0. 0 Normal operation 1 MSCAN in initialization mode

1 See the Bosch CAN 2.0A/B specification for a detailed definition of transmitter and receiver states.

2 In order to protect from accidentally violating the CAN protocol, TXCAN is immediately forced to a recessive state when the CPU enters wait (CSWAI = 1) or stop mode (see Section 18.4.5.2, “Operation in Wait Mode” and Section 18.4.5.3, “Operation in Stop Mode”).

3 The CPU has to make sure that the WUPE register and the WUPIE wake-up interrupt enable register (see Section 18.3.2.6, “MSCAN Receiver Interrupt Enable Register (CANRIER)) is enabled, if the recovery mechanism from stop or wait is required.

4 The CPU cannot clear SLPRQ before the MSCAN has entered sleep mode (SLPRQ = 1 and SLPAK = 1).

5 The CPU cannot clear INITRQ before the MSCAN has entered initialization mode (INITRQ = 1 and INITAK = 1).

6 In order to protect from accidentally violating the CAN protocol, TXCAN is immediately forced to a recessive state when the initialization mode is requested by the CPU. Thus, the recommended procedure is to bring the MSCAN into sleep mode (SLPRQ = 1 and SLPAK = 1) before requesting initialization mode.

7 Not including WUPE, INITRQ, and SLPRQ.

8 TSTAT1 and TSTAT0 are not affected by initialization mode.

9 RSTAT1 and RSTAT0 are not affected by initialization mode.

18.3.2.2 MSCAN Control Register 1 (CANCTL1)

The CANCTL1 register provides various control bits and handshake status information of the MSCAN module as described below.

Module Base + 0x0001 Access: User read/write[1]

	7	6	5	4	3	2	1	0
R	CANE	CLKSRC	LOOPB	LISTEN	BORM	WUPM	SLPAK	INITAK
W								
Reset:	0	0	0	1	0	0	0	1

= Unimplemented

Figure 18-5. MSCAN Control Register 1 (CANCTL1)

[1] Read: Anytime
Write: Anytime in initialization mode (INITRQ = 1 and INITAK = 1), except CANE which is write once in normal and anytime in special system operation modes when the MSCAN is in initialization mode (INITRQ = 1 and INITAK = 1)

Table 18-4. CANCTL1 Register Field Descriptions

Field	Description
7 CANE	**MSCAN Enable** 0 MSCAN module is disabled 1 MSCAN module is enabled
6 CLKSRC	**MSCAN Clock Source** — This bit defines the clock source for the MSCAN module (only for systems with a clock generation module; Section 18.4.3.2, “Clock System,” and Section Figure 18-43., “MSCAN Clocking Scheme,”). 0 MSCAN clock source is the oscillator clock 1 MSCAN clock source is the bus clock
5 LOOPB	**Loopback Self Test Mode** — When this bit is set, the MSCAN performs an internal loopback which can be used for self test operation. The bit stream output of the transmitter is fed back to the receiver internally. The RXCAN input is ignored and the TXCAN output goes to the recessive state (logic 1). The MSCAN behaves as it does normally when transmitting and treats its own transmitted message as a message received from a remote node. In this state, the MSCAN ignores the bit sent during the ACK slot in the CAN frame acknowledge field to ensure proper reception of its own message. Both transmit and receive interrupts are generated. 0 Loopback self test disabled 1 Loopback self test enabled
4 LISTEN	**Listen Only Mode** — This bit configures the MSCAN as a CAN bus monitor. When LISTEN is set, all valid CAN messages with matching ID are received, but no acknowledgement or error frames are sent out (see Section 18.4.4.4, “Listen-Only Mode”). In addition, the error counters are frozen. Listen only mode supports applications which require “hot plugging” or throughput analysis. The MSCAN is unable to transmit any messages when listen only mode is active. 0 Normal operation 1 Listen only mode activated
3 BORM	**Bus-Off Recovery Mode** — This bit configures the bus-off state recovery mode of the MSCAN. Refer to Section 18.5.2, “Bus-Off Recovery,” for details. 0 Automatic bus-off recovery (see Bosch CAN 2.0A/B protocol specification) 1 Bus-off recovery upon user request
2 WUPM	**Wake-Up Mode** — If WUPE in CANCTL0 is enabled, this bit defines whether the integrated low-pass filter is applied to protect the MSCAN from spurious wake-up (see Section 18.4.5.5, “MSCAN Sleep Mode”). 0 MSCAN wakes up on any dominant level on the CAN bus 1 MSCAN wakes up only in case of a dominant pulse on the CAN bus that has a length of T_{wup}

Table 18-4. CANCTL1 Register Field Descriptions (continued)

Field	Description
1 SLPAK	**Sleep Mode Acknowledge** — This flag indicates whether the MSCAN module has entered sleep mode (see Section 18.4.5.5, “MSCAN Sleep Mode”). It is used as a handshake flag for the SLPRQ sleep mode request. Sleep mode is active when SLPRQ = 1 and SLPAK = 1. Depending on the setting of WUPE, the MSCAN will clear the flag if it detects activity on the CAN bus while in sleep mode. 0 Running — The MSCAN operates normally 1 Sleep mode active — The MSCAN has entered sleep mode
0 INITAK	**Initialization Mode Acknowledge** — This flag indicates whether the MSCAN module is in initialization mode (see Section 18.4.4.5, “MSCAN Initialization Mode”). It is used as a handshake flag for the INITRQ initialization mode request. Initialization mode is active when INITRQ = 1 and INITAK = 1. The registers CANCTL1, CANBTR0, CANBTR1, CANIDAC, CANIDAR0–CANIDAR7, and CANIDMR0–CANIDMR7 can be written only by the CPU when the MSCAN is in initialization mode. 0 Running — The MSCAN operates normally 1 Initialization mode active — The MSCAN has entered initialization mode

18.3.2.3 MSCAN Bus Timing Register 0 (CANBTR0)

The CANBTR0 register configures various CAN bus timing parameters of the MSCAN module.

Module Base + 0x0002 Access: User read/write[1]

	7	6	5	4	3	2	1	0
R W	SJW1	SJW0	BRP5	BRP4	BRP3	BRP2	BRP1	BRP0
Reset:	0	0	0	0	0	0	0	0

Figure 18-6. MSCAN Bus Timing Register 0 (CANBTR0)

[1] Read: Anytime
Write: Anytime in initialization mode (INITRQ = 1 and INITAK = 1)

Table 18-5. CANBTR0 Register Field Descriptions

Field	Description
7-6 SJW[1:0]	**Synchronization Jump Width** — The synchronization jump width defines the maximum number of time quanta (Tq) clock cycles a bit can be shortened or lengthened to achieve resynchronization to data transitions on the CAN bus (see Table 18-6).
5-0 BRP[5:0]	**Baud Rate Prescaler** — These bits determine the time quanta (Tq) clock which is used to build up the bit timing (see Table 18-7).

Table 18-6. Synchronization Jump Width

SJW1	SJW0	Synchronization Jump Width
0	0	1 Tq clock cycle
0	1	2 Tq clock cycles
1	0	3 Tq clock cycles
1	1	4 Tq clock cycles

Table 18-7. Baud Rate Prescaler

BRP5	BRP4	BRP3	BRP2	BRP1	BRP0	Prescaler value (P)
0	0	0	0	0	0	1
0	0	0	0	0	1	2
0	0	0	0	1	0	3
0	0	0	0	1	1	4
:	:	:	:	:	:	:
1	1	1	1	1	1	64

18.3.2.4 MSCAN Bus Timing Register 1 (CANBTR1)

The CANBTR1 register configures various CAN bus timing parameters of the MSCAN module.

Module Base + 0x0003 Access: User read/write[1]

	7	6	5	4	3	2	1	0
R W	SAMP	TSEG22	TSEG21	TSEG20	TSEG13	TSEG12	TSEG11	TSEG10
Reset:	0	0	0	0	0	0	0	0

Figure 18-7. MSCAN Bus Timing Register 1 (CANBTR1)

1 Read: Anytime
Write: Anytime in initialization mode (INITRQ = 1 and INITAK = 1)

Table 18-8. CANBTR1 Register Field Descriptions

Field	Description
7 SAMP	**Sampling** — This bit determines the number of CAN bus samples taken per bit time. 0 One sample per bit. 1 Three samples per bit[1]. If SAMP = 0, the resulting bit value is equal to the value of the single bit positioned at the sample point. If SAMP = 1, the resulting bit value is determined by using majority rule on the three total samples. For higher bit rates, it is recommended that only one sample is taken per bit time (SAMP = 0).
6-4 TSEG2[2:0]	**Time Segment 2** — Time segments within the bit time fix the number of clock cycles per bit time and the location of the sample point (see Figure 18-44). Time segment 2 (TSEG2) values are programmable as shown in Table 18-9.
3-0 TSEG1[3:0]	**Time Segment 1** — Time segments within the bit time fix the number of clock cycles per bit time and the location of the sample point (see Figure 18-44). Time segment 1 (TSEG1) values are programmable as shown in Table 18-10.

1 In this case, PHASE_SEG1 must be at least 2 time quanta (Tq).

Table 18-9. Time Segment 2 Values

TSEG22	TSEG21	TSEG20	Time Segment 2
0	0	0	1 Tq clock cycle[1]
0	0	1	2 Tq clock cycles
:	:	:	:
1	1	0	7 Tq clock cycles
1	1	1	8 Tq clock cycles

[1] This setting is not valid. Please refer to Table 18-37 for valid settings.

Table 18-10. Time Segment 1 Values

TSEG13	TSEG12	TSEG11	TSEG10	Time segment 1
0	0	0	0	1 Tq clock cycle[1]
0	0	0	1	2 Tq clock cycles[1]
0	0	1	0	3 Tq clock cycles[1]
0	0	1	1	4 Tq clock cycles
:	:	:	:	:
1	1	1	0	15 Tq clock cycles
1	1	1	1	16 Tq clock cycles

[1] This setting is not valid. Please refer to Table 18-37 for valid settings.

The bit time is determined by the oscillator frequency, the baud rate prescaler, and the number of time quanta (Tq) clock cycles per bit (as shown in Table 18-9 and Table 18-10).

Eqn. 18-1

$$Bit\ \ Time = \frac{(Prescaler\ \ value)}{f_{CANCLK}} \bullet (1 + TimeSegment1 + TimeSegment2)$$

18.3.2.5 MSCAN Receiver Flag Register (CANRFLG)

A flag can be cleared only by software (writing a 1 to the corresponding bit position) when the condition which caused the setting is no longer valid. Every flag has an associated interrupt enable bit in the CANRIER register.

Module Base + 0x0004 Access: User read/write[1]

	7	6	5	4	3	2	1	0
R	WUPIF	CSCIF	RSTAT1	RSTAT0	TSTAT1	TSTAT0	OVRIF	RXF
W								
Reset:	0	0	0	0	0	0	0	0

= Unimplemented

Figure 18-8. MSCAN Receiver Flag Register (CANRFLG)

[1] Read: Anytime
Write: Anytime when not in initialization mode, except RSTAT[1:0] and TSTAT[1:0] flags which are read-only; write of 1 clears flag; write of 0 is ignored

NOTE

The CANRFLG register is held in the reset state[1] when the initialization mode is active (INITRQ = 1 and INITAK = 1). This register is writable again as soon as the initialization mode is exited (INITRQ = 0 and INITAK = 0).

Table 18-11. CANRFLG Register Field Descriptions

Field	Description
7 WUPIF	**Wake-Up Interrupt Flag** — If the MSCAN detects CAN bus activity while in sleep mode (see Section 18.4.5.5, “MSCAN Sleep Mode,”) and WUPE = 1 in CANTCTL0 (see Section 18.3.2.1, “MSCAN Control Register 0 (CANCTL0)”), the module will set WUPIF. If not masked, a wake-up interrupt is pending while this flag is set. 0 No wake-up activity observed while in sleep mode 1 MSCAN detected activity on the CAN bus and requested wake-up
6 CSCIF	**CAN Status Change Interrupt Flag** — This flag is set when the MSCAN changes its current CAN bus status due to the actual value of the transmit error counter (TEC) and the receive error counter (REC). An additional 4-bit (RSTAT[1:0], TSTAT[1:0]) status register, which is split into separate sections for TEC/REC, informs the system on the actual CAN bus status (see Section 18.3.2.6, “MSCAN Receiver Interrupt Enable Register (CANRIER)”). If not masked, an error interrupt is pending while this flag is set. CSCIF provides a blocking interrupt. That guarantees that the receiver/transmitter status bits (RSTAT/TSTAT) are only updated when no CAN status change interrupt is pending. If the TECs/RECs change their current value after the CSCIF is asserted, which would cause an additional state change in the RSTAT/TSTAT bits, these bits keep their status until the current CSCIF interrupt is cleared again. 0 No change in CAN bus status occurred since last interrupt 1 MSCAN changed current CAN bus status
5-4 RSTAT[1:0]	**Receiver Status Bits** — The values of the error counters control the actual CAN bus status of the MSCAN. As soon as the status change interrupt flag (CSCIF) is set, these bits indicate the appropriate receiver related CAN bus status of the MSCAN. The coding for the bits RSTAT1, RSTAT0 is: 00 RxOK: $0 \le$ receive error counter < 96 01 RxWRN: $96 \le$ receive error counter < 128 10 RxERR: $128 \le$ receive error counter *11 Bus-off*[1]*: $256 \le$ transmit error counter*

1. The RSTAT[1:0], TSTAT[1:0] bits are not affected by initialization mode.

Table 18-11. CANRFLG Register Field Descriptions (continued)

Field	Description
3-2 TSTAT[1:0]	**Transmitter Status Bits** — The values of the error counters control the actual CAN bus status of the MSCAN. As soon as the status change interrupt flag (CSCIF) is set, these bits indicate the appropriate transmitter related CAN bus status of the MSCAN. The coding for the bits TSTAT1, TSTAT0 is: 00 TxOK: 0 ≤ transmit error counter < 96 01 TxWRN: 96 ≤ transmit error counter < 128 10 TxERR: 128 ≤ transmit error counter < 256 11 Bus-Off: 256 ≤ transmit error counter
1 OVRIF	**Overrun Interrupt Flag** — This flag is set when a data overrun condition occurs. If not masked, an error interrupt is pending while this flag is set. 0 No data overrun condition 1 A data overrun detected
0 RXF[2]	**Receive Buffer Full Flag** — RXF is set by the MSCAN when a new message is shifted in the receiver FIFO. This flag indicates whether the shifted buffer is loaded with a correctly received message (matching identifier, matching cyclic redundancy code (CRC) and no other errors detected). After the CPU has read that message from the RxFG buffer in the receiver FIFO, the RXF flag must be cleared to release the buffer. A set RXF flag prohibits the shifting of the next FIFO entry into the foreground buffer (RxFG). If not masked, a receive interrupt is pending while this flag is set. 0 No new message available within the RxFG 1 The receiver FIFO is not empty. A new message is available in the RxFG

1 Redundant Information for the most critical CAN bus status which is “bus-off”. This only occurs if the Tx error counter exceeds a number of 255 errors. Bus-off affects the receiver state. As soon as the transmitter leaves its bus-off state the receiver state skips to RxOK too. Refer also to TSTAT[1:0] coding in this register.

2 To ensure data integrity, do not read the receive buffer registers while the RXF flag is cleared. For MCUs with dual CPUs, reading the receive buffer registers while the RXF flag is cleared may result in a CPU fault condition.

18.3.2.6 MSCAN Receiver Interrupt Enable Register (CANRIER)

This register contains the interrupt enable bits for the interrupt flags described in the CANRFLG register.

Module Base + 0x0005 Access: User read/write[1]

	7	6	5	4	3	2	1	0
R W	WUPIE	CSCIE	RSTATE1	RSTATE0	TSTATE1	TSTATE0	OVRIE	RXFIE
Reset:	0	0	0	0	0	0	0	0

Figure 18-9. MSCAN Receiver Interrupt Enable Register (CANRIER)

1 Read: Anytime
Write: Anytime when not in initialization mode

NOTE

The CANRIER register is held in the reset state when the initialization mode is active (INITRQ=1 and INITAK=1). This register is writable when not in initialization mode (INITRQ=0 and INITAK=0).

The RSTATE[1:0], TSTATE[1:0] bits are not affected by initialization mode.

Table 18-12. CANRIER Register Field Descriptions

Field	Description
7 WUPIE[1]	**Wake-Up Interrupt Enable** 0 No interrupt request is generated from this event. 1 A wake-up event causes a Wake-Up interrupt request.
6 CSCIE	**CAN Status Change Interrupt Enable** 0 No interrupt request is generated from this event. 1 A CAN Status Change event causes an error interrupt request.
5-4 RSTATE[1:0]	**Receiver Status Change Enable** — These RSTAT enable bits control the sensitivity level in which receiver state changes are causing CSCIF interrupts. Independent of the chosen sensitivity level the RSTAT flags continue to indicate the actual receiver state and are only updated if no CSCIF interrupt is pending. 00 Do not generate any CSCIF interrupt caused by receiver state changes. 01 Generate CSCIF interrupt only if the receiver enters or leaves “bus-off” state. Discard other receiver state changes for generating CSCIF interrupt. 10 Generate CSCIF interrupt only if the receiver enters or leaves “RxErr” or “bus-off”[2] state. Discard other receiver state changes for generating CSCIF interrupt. 11 Generate CSCIF interrupt on all state changes.
3-2 TSTATE[1:0]	**Transmitter Status Change Enable** — These TSTAT enable bits control the sensitivity level in which transmitter state changes are causing CSCIF interrupts. Independent of the chosen sensitivity level, the TSTAT flags continue to indicate the actual transmitter state and are only updated if no CSCIF interrupt is pending. 00 Do not generate any CSCIF interrupt caused by transmitter state changes. 01 Generate CSCIF interrupt only if the transmitter enters or leaves “bus-off” state. Discard other transmitter state changes for generating CSCIF interrupt. 10 Generate CSCIF interrupt only if the transmitter enters or leaves “TxErr” or “bus-off” state. Discard other transmitter state changes for generating CSCIF interrupt. 11 Generate CSCIF interrupt on all state changes.
1 OVRIE	**Overrun Interrupt Enable** 0 No interrupt request is generated from this event. 1 An overrun event causes an error interrupt request.
0 RXFIE	**Receiver Full Interrupt Enable** 0 No interrupt request is generated from this event. 1 A receive buffer full (successful message reception) event causes a receiver interrupt request.

[1] WUPIE and WUPE (see Section 18.3.2.1, “MSCAN Control Register 0 (CANCTL0)”) must both be enabled if the recovery mechanism from stop or wait is required.

[2] Bus-off state is only defined for transmitters by the CAN standard (see Bosch CAN 2.0A/B protocol specification). Because the only possible state change for the transmitter from bus-off to TxOK also forces the receiver to skip its current state to RxOK, the coding of the RXSTAT[1:0] flags define an additional bus-off state for the receiver (see Section 18.3.2.5, “MSCAN Receiver Flag Register (CANRFLG)”).

18.3.2.7 MSCAN Transmitter Flag Register (CANTFLG)

The transmit buffer empty flags each have an associated interrupt enable bit in the CANTIER register.

Module Base + 0x0006 Access: User read/write[1]

	7	6	5	4	3	2	1	0
R	0	0	0	0	0	TXE2	TXE1	TXE0
W								
Reset:	0	0	0	0	0	1	1	1

= Unimplemented

Figure 18-10. MSCAN Transmitter Flag Register (CANTFLG)

[1] Read: Anytime
Write: Anytime when not in initialization mode; write of 1 clears flag, write of 0 is ignored

NOTE

The CANTFLG register is held in the reset state when the initialization mode is active (INITRQ = 1 and INITAK = 1). This register is writable when not in initialization mode (INITRQ = 0 and INITAK = 0).

Table 18-13. CANTFLG Register Field Descriptions

Field	Description
2-0 TXE[2:0]	**Transmitter Buffer Empty** — This flag indicates that the associated transmit message buffer is empty, and thus not scheduled for transmission. The CPU must clear the flag after a message is set up in the transmit buffer and is due for transmission. The MSCAN sets the flag after the message is sent successfully. The flag is also set by the MSCAN when the transmission request is successfully aborted due to a pending abort request (see Section 18.3.2.9, “MSCAN Transmitter Message Abort Request Register (CANTARQ)”). If not masked, a transmit interrupt is pending while this flag is set. Clearing a TXEx flag also clears the corresponding ABTAKx (see Section 18.3.2.10, “MSCAN Transmitter Message Abort Acknowledge Register (CANTAAK)”). When a TXEx flag is set, the corresponding ABTRQx bit is cleared (see Section 18.3.2.9, “MSCAN Transmitter Message Abort Request Register (CANTARQ)”). When listen-mode is active (see Section 18.3.2.2, “MSCAN Control Register 1 (CANCTL1)”) the TXEx flags cannot be cleared and no transmission is started. Read and write accesses to the transmit buffer will be blocked, if the corresponding TXEx bit is cleared (TXEx = 0) and the buffer is scheduled for transmission. 0 The associated message buffer is full (loaded with a message due for transmission) 1 The associated message buffer is empty (not scheduled)

18.3.2.8 MSCAN Transmitter Interrupt Enable Register (CANTIER)

This register contains the interrupt enable bits for the transmit buffer empty interrupt flags.

Module Base + 0x0007 Access: User read/write[1]

	7	6	5	4	3	2	1	0
R	0	0	0	0	0	TXEIE2	TXEIE1	TXEIE0
W								
Reset:	0	0	0	0	0	0	0	0

= Unimplemented

Figure 18-11. MSCAN Transmitter Interrupt Enable Register (CANTIER)

[1] Read: Anytime
Write: Anytime when not in initialization mode

NOTE

The CANTIER register is held in the reset state when the initialization mode is active (INITRQ = 1 and INITAK = 1). This register is writable when not in initialization mode (INITRQ = 0 and INITAK = 0).

Table 18-14. CANTIER Register Field Descriptions

Field	Description
2-0 TXEIE[2:0]	**Transmitter Empty Interrupt Enable** 0 No interrupt request is generated from this event. 1 A transmitter empty (transmit buffer available for transmission) event causes a transmitter empty interrupt request.

18.3.2.9 MSCAN Transmitter Message Abort Request Register (CANTARQ)

The CANTARQ register allows abort request of queued messages as described below.

Module Base + 0x0008 Access: User read/write[1]

	7	6	5	4	3	2	1	0
R	0	0	0	0	0	ABTRQ2	ABTRQ1	ABTRQ0
W								
Reset:	0	0	0	0	0	0	0	0

= Unimplemented

Figure 18-12. MSCAN Transmitter Message Abort Request Register (CANTARQ)

[1] Read: Anytime
Write: Anytime when not in initialization mode

NOTE

The CANTARQ register is held in the reset state when the initialization mode is active (INITRQ = 1 and INITAK = 1). This register is writable when not in initialization mode (INITRQ = 0 and INITAK = 0).

Table 18-15. CANTARQ Register Field Descriptions

Field	Description
2-0 ABTRQ[2:0]	**Abort Request** — The CPU sets the ABTRQx bit to request that a scheduled message buffer (TXEx = 0) be aborted. The MSCAN grants the request if the message has not already started transmission, or if the transmission is not successful (lost arbitration or error). When a message is aborted, the associated TXE (see Section 18.3.2.7, “MSCAN Transmitter Flag Register (CANTFLG)”) and abort acknowledge flags (ABTAK, see Section 18.3.2.10, “MSCAN Transmitter Message Abort Acknowledge Register (CANTAAK)”) are set and a transmit interrupt occurs if enabled. The CPU cannot reset ABTRQx. ABTRQx is reset whenever the associated TXE flag is set. 0 No abort request 1 Abort request pending

18.3.2.10 MSCAN Transmitter Message Abort Acknowledge Register (CANTAAK)

The CANTAAK register indicates the successful abort of a queued message, if requested by the appropriate bits in the CANTARQ register.

Module Base + 0x0009 Access: User read/write[1]

	7	6	5	4	3	2	1	0
R	0	0	0	0	0	ABTAK2	ABTAK1	ABTAK0
W								
Reset:	0	0	0	0	0	0	0	0

= Unimplemented

Figure 18-13. MSCAN Transmitter Message Abort Acknowledge Register (CANTAAK)

[1] Read: Anytime
Write: Unimplemented

NOTE

The CANTAAK register is held in the reset state when the initialization mode is active (INITRQ = 1 and INITAK = 1).

Table 18-16. CANTAAK Register Field Descriptions

Field	Description
2-0 ABTAK[2:0]	**Abort Acknowledge** — This flag acknowledges that a message was aborted due to a pending abort request from the CPU. After a particular message buffer is flagged empty, this flag can be used by the application software to identify whether the message was aborted successfully or was sent anyway. The ABTAKx flag is cleared whenever the corresponding TXE flag is cleared. 0 The message was not aborted. 1 The message was aborted.

18.3.2.11 MSCAN Transmit Buffer Selection Register (CANTBSEL)

The CANTBSEL register allows the selection of the actual transmit message buffer, which then will be accessible in the CANTXFG register space.

Module Base + 0x000A — Access: User read/write[1]

	7	6	5	4	3	2	1	0
R	0	0	0	0	0	TX2	TX1	TX0
W								
Reset:	0	0	0	0	0	0	0	0

= Unimplemented

Figure 18-14. MSCAN Transmit Buffer Selection Register (CANTBSEL)

[1] Read: Find the lowest ordered bit set to 1, all other bits will be read as 0
Write: Anytime when not in initialization mode

NOTE

The CANTBSEL register is held in the reset state when the initialization mode is active (INITRQ = 1 and INITAK=1). This register is writable when not in initialization mode (INITRQ = 0 and INITAK = 0).

Table 18-17. CANTBSEL Register Field Descriptions

Field	Description
2-0 TX[2:0]	**Transmit Buffer Select** — The lowest numbered bit places the respective transmit buffer in the CANTXFG register space (e.g., TX1 = 1 and TX0 = 1 selects transmit buffer TX0; TX1 = 1 and TX0 = 0 selects transmit buffer TX1). Read and write accesses to the selected transmit buffer will be blocked, if the corresponding TXEx bit is cleared and the buffer is scheduled for transmission (see Section 18.3.2.7, “MSCAN Transmitter Flag Register (CANTFLG)”). 0 The associated message buffer is deselected 1 The associated message buffer is selected, if lowest numbered bit

The following gives a short programming example of the usage of the CANTBSEL register:

To get the next available transmit buffer, application software must read the CANTFLG register and write this value back into the CANTBSEL register. In this example Tx buffers TX1 and TX2 are available. The value read from CANTFLG is therefore 0b0000_0110. When writing this value back to CANTBSEL, the Tx buffer TX1 is selected in the CANTXFG because the lowest numbered bit set to 1 is at bit position 1. Reading back this value out of CANTBSEL results in 0b0000_0010, because only the lowest numbered bit position set to 1 is presented. This mechanism eases the application software’s selection of the next available Tx buffer.

- LDAA CANTFLG; value read is 0b0000_0110
- STAA CANTBSEL; value written is 0b0000_0110
- LDAA CANTBSEL; value read is 0b0000_0010

If all transmit message buffers are deselected, no accesses are allowed to the CANTXFG registers.

18.3.2.12 MSCAN Identifier Acceptance Control Register (CANIDAC)

The CANIDAC register is used for identifier acceptance control as described below.

Module Base + 0x000B — Access: User read/write[1]

	7	6	5	4	3	2	1	0
R	0	0	IDAM1	IDAM0	0	IDHIT2	IDHIT1	IDHIT0
W								
Reset:	0	0	0	0	0	0	0	0

= Unimplemented

Figure 18-15. MSCAN Identifier Acceptance Control Register (CANIDAC)

[1] Read: Anytime
Write: Anytime in initialization mode (INITRQ = 1 and INITAK = 1), except bits IDHITx, which are read-only

Table 18-18. CANIDAC Register Field Descriptions

Field	Description
5-4 IDAM[1:0]	**Identifier Acceptance Mode** — The CPU sets these flags to define the identifier acceptance filter organization (see Section 18.4.3, “Identifier Acceptance Filter”). Table 18-19 summarizes the different settings. In filter closed mode, no message is accepted such that the foreground buffer is never reloaded.
2-0 IDHIT[2:0]	Identifier Acceptance Hit Indicator — The MSCAN sets these flags to indicate an identifier acceptance hit (see Section 18.4.3, “Identifier Acceptance Filter”). Table 18-20 summarizes the different settings.

Table 18-19. Identifier Acceptance Mode Settings

IDAM1	IDAM0	Identifier Acceptance Mode
0	0	Two 32-bit acceptance filters
0	1	Four 16-bit acceptance filters
1	0	Eight 8-bit acceptance filters
1	1	Filter closed

Table 18-20. Identifier Acceptance Hit Indication

IDHIT2	IDHIT1	IDHIT0	Identifier Acceptance Hit
0	0	0	Filter 0 hit
0	0	1	Filter 1 hit
0	1	0	Filter 2 hit
0	1	1	Filter 3 hit
1	0	0	Filter 4 hit
1	0	1	Filter 5 hit
1	1	0	Filter 6 hit
1	1	1	Filter 7 hit

The IDHITx indicators are always related to the message in the foreground buffer (RxFG). When a message gets shifted into the foreground buffer of the receiver FIFO the indicators are updated as well.

18.3.2.13 MSCAN Reserved Register

This register is reserved for factory testing of the MSCAN module and is not available in normal system operating modes.

Module Base + 0x000C — Access: User read/write[1]

	7	6	5	4	3	2	1	0
R	0	0	0	0	0	0	0	0
W								
Reset:	0	0	0	0	0	0	0	0

= Unimplemented

Figure 18-16. MSCAN Reserved Register

[1] Read: Always reads zero in normal system operation modes
Write: Unimplemented in normal system operation modes

NOTE

Writing to this register when in special system operating modes can alter the MSCAN functionality.

18.3.2.14 MSCAN Miscellaneous Register (CANMISC)

This register provides additional features.

Module Base + 0x000D — Access: User read/write[1]

	7	6	5	4	3	2	1	0
R	0	0	0	0	0	0	0	BOHOLD
W								
Reset:	0	0	0	0	0	0	0	0

= Unimplemented

Figure 18-17. MSCAN Miscellaneous Register (CANMISC)

[1] Read: Anytime
Write: Anytime; write of ‘1’ clears flag; write of ‘0’ ignored

Table 18-21. CANMISC Register Field Descriptions

Field	Description
0 BOHOLD	**Bus-off State Hold Until User Request** — If BORM is set in MSCAN Control Register 1 (CANCTL1), this bit indicates whether the module has entered the bus-off state. Clearing this bit requests the recovery from bus-off. Refer to Section 18.5.2, “Bus-Off Recovery,” for details. 0 Module is not bus-off or recovery has been requested by user in bus-off state 1 Module is bus-off and holds this state until user request

18.3.2.15 MSCAN Receive Error Counter (CANRXERR)

This register reflects the status of the MSCAN receive error counter.

Module Base + 0x000E — Access: User read/write[1]

	7	6	5	4	3	2	1	0
R	RXERR7	RXERR6	RXERR5	RXERR4	RXERR3	RXERR2	RXERR1	RXERR0
W								
Reset:	0	0	0	0	0	0	0	0

= Unimplemented

Figure 18-18. MSCAN Receive Error Counter (CANRXERR)

[1] Read: Only when in sleep mode (SLPRQ = 1 and SLPAK = 1) or initialization mode (INITRQ = 1 and INITAK = 1)
Write: Unimplemented

NOTE

Reading this register when in any other mode other than sleep or initialization mode may return an incorrect value. For MCUs with dual CPUs, this may result in a CPU fault condition.

18.3.2.16 MSCAN Transmit Error Counter (CANTXERR)

This register reflects the status of the MSCAN transmit error counter.

Module Base + 0x000F — Access: User read/write[1]

	7	6	5	4	3	2	1	0
R	TXERR7	TXERR6	TXERR5	TXERR4	TXERR3	TXERR2	TXERR1	TXERR0
W								
Reset:	0	0	0	0	0	0	0	0

= Unimplemented

Figure 18-19. MSCAN Transmit Error Counter (CANTXERR)

[1] Read: Only when in sleep mode (SLPRQ = 1 and SLPAK = 1) or initialization mode (INITRQ = 1 and INITAK = 1)
Write: Unimplemented

NOTE

Reading this register when in any other mode other than sleep or initialization mode, may return an incorrect value. For MCUs with dual CPUs, this may result in a CPU fault condition.

18.3.2.17 MSCAN Identifier Acceptance Registers (CANIDAR0-7)

On reception, each message is written into the background receive buffer. The CPU is only signalled to read the message if it passes the criteria in the identifier acceptance and identifier mask registers (accepted); otherwise, the message is overwritten by the next message (dropped).

The acceptance registers of the MSCAN are applied on the IDR0–IDR3 registers (see Section 18.3.3.1, “Identifier Registers (IDR0–IDR3)”) of incoming messages in a bit by bit manner (see Section 18.4.3, “Identifier Acceptance Filter”).

For extended identifiers, all four acceptance and mask registers are applied. For standard identifiers, only the first two (CANIDAR0/1, CANIDMR0/1) are applied.

Module Base + 0x0010 to Module Base + 0x0013 Access: User read/write[1]

	7	6	5	4	3	2	1	0
R W	AC7	AC6	AC5	AC4	AC3	AC2	AC1	AC0
Reset	0	0	0	0	0	0	0	0

Figure 18-20. MSCAN Identifier Acceptance Registers (First Bank) — CANIDAR0–CANIDAR3

1 Read: Anytime
Write: Anytime in initialization mode (INITRQ = 1 and INITAK = 1)

Table 18-22. CANIDAR0–CANIDAR3 Register Field Descriptions

Field	Description
7-0 AC[7:0]	**Acceptance Code Bits** — AC[7:0] comprise a user-defined sequence of bits with which the corresponding bits of the related identifier register (IDRn) of the receive message buffer are compared. The result of this comparison is then masked with the corresponding identifier mask register.

Module Base + 0x0018 to Module Base + 0x001B Access: User read/write[1]

	7	6	5	4	3	2	1	0
R W	AC7	AC6	AC5	AC4	AC3	AC2	AC1	AC0
Reset	0	0	0	0	0	0	0	0

Figure 18-21. MSCAN Identifier Acceptance Registers (Second Bank) — CANIDAR4–CANIDAR7

1 Read: Anytime
Write: Anytime in initialization mode (INITRQ = 1 and INITAK = 1)

Table 18-23. CANIDAR4–CANIDAR7 Register Field Descriptions

Field	Description
7-0 AC[7:0]	**Acceptance Code Bits** — AC[7:0] comprise a user-defined sequence of bits with which the corresponding bits of the related identifier register (IDRn) of the receive message buffer are compared. The result of this comparison is then masked with the corresponding identifier mask register.

18.3.2.18 MSCAN Identifier Mask Registers (CANIDMR0–CANIDMR7)

The identifier mask register specifies which of the corresponding bits in the identifier acceptance register are relevant for acceptance filtering. To receive standard identifiers in 32 bit filter mode, it is required to program the last three bits (AM[2:0]) in the mask registers CANIDMR1 and CANIDMR5 to “don’t care.” To receive standard identifiers in 16 bit filter mode, it is required to program the last three bits (AM[2:0]) in the mask registers CANIDMR1, CANIDMR3, CANIDMR5, and CANIDMR7 to “don’t care.”

Module Base + 0x0014 to Module Base + 0x0017 Access: User read/write[1]

	7	6	5	4	3	2	1	0
R W	AM7	AM6	AM5	AM4	AM3	AM2	AM1	AM0
Reset	0	0	0	0	0	0	0	0

Figure 18-22. MSCAN Identifier Mask Registers (First Bank) — CANIDMR0–CANIDMR3

1 Read: Anytime
Write: Anytime in initialization mode (INITRQ = 1 and INITAK = 1)

Table 18-24. CANIDMR0–CANIDMR3 Register Field Descriptions

Field	Description
7-0 AM[7:0]	**Acceptance Mask Bits** — If a particular bit in this register is cleared, this indicates that the corresponding bit in the identifier acceptance register must be the same as its identifier bit before a match is detected. The message is accepted if all such bits match. If a bit is set, it indicates that the state of the corresponding bit in the identifier acceptance register does not affect whether or not the message is accepted. 0 Match corresponding acceptance code register and identifier bits 1 Ignore corresponding acceptance code register bit

Module Base + 0x001C to Module Base + 0x001F Access: User read/write[1]

	7	6	5	4	3	2	1	0
R W	AM7	AM6	AM5	AM4	AM3	AM2	AM1	AM0
Reset	0	0	0	0	0	0	0	0

Figure 18-23. MSCAN Identifier Mask Registers (Second Bank) — CANIDMR4–CANIDMR7

[1] Read: Anytime
Write: Anytime in initialization mode (INITRQ = 1 and INITAK = 1)

Table 18-25. CANIDMR4–CANIDMR7 Register Field Descriptions

Field	Description
7-0 AM[7:0]	**Acceptance Mask Bits** — If a particular bit in this register is cleared, this indicates that the corresponding bit in the identifier acceptance register must be the same as its identifier bit before a match is detected. The message is accepted if all such bits match. If a bit is set, it indicates that the state of the corresponding bit in the identifier acceptance register does not affect whether or not the message is accepted. 0 Match corresponding acceptance code register and identifier bits 1 Ignore corresponding acceptance code register bit

18.3.3 Programmer's Model of Message Storage

The following section details the organization of the receive and transmit message buffers and the associated control registers.

To simplify the programmer interface, the receive and transmit message buffers have the same outline. Each message buffer allocates 16 bytes in the memory map containing a 13 byte data structure.

An additional transmit buffer priority register (TBPR) is defined for the transmit buffers. Within the last two bytes of this memory map, the MSCAN stores a special 16-bit time stamp, which is sampled from an internal timer after successful transmission or reception of a message. This feature is only available for transmit and receiver buffers, if the TIME bit is set (see Section 18.3.2.1, "MSCAN Control Register 0 (CANCTL0)").

The time stamp register is written by the MSCAN. The CPU can only read these registers.

Table 18-26. Message Buffer Organization

Offset Address	Register	Access
0x00X0	IDR0 — Identifier Register 0	R/W
0x00X1	IDR1 — Identifier Register 1	R/W
0x00X2	IDR2 — Identifier Register 2	R/W
0x00X3	IDR3 — Identifier Register 3	R/W
0x00X4	DSR0 — Data Segment Register 0	R/W
0x00X5	DSR1 — Data Segment Register 1	R/W
0x00X6	DSR2 — Data Segment Register 2	R/W
0x00X7	DSR3 — Data Segment Register 3	R/W
0x00X8	DSR4 — Data Segment Register 4	R/W
0x00X9	DSR5 — Data Segment Register 5	R/W
0x00XA	DSR6 — Data Segment Register 6	R/W
0x00XB	DSR7 — Data Segment Register 7	R/W
0x00XC	DLR — Data Length Register	R/W
0x00XD	TBPR — Transmit Buffer Priority Register[1]	R/W
0x00XE	TSRH — Time Stamp Register (High Byte)	R
0x00XF	TSRL — Time Stamp Register (Low Byte)	R

[1] Not applicable for receive buffers

Figure 18-24 shows the common 13-byte data structure of receive and transmit buffers for extended identifiers. The mapping of standard identifiers into the IDR registers is shown in Figure 18-25.

All bits of the receive and transmit buffers are ‘x’ out of reset because of RAM-based implementation[1]. All reserved or unused bits of the receive and transmit buffers always read ‘x’.

1. Exception: The transmit buffer priority registers are 0 out of reset.

Figure 18-24. Receive/Transmit Message Buffer — Extended Identifier Mapping

Register Name		Bit 7	6	5	4	3	2	1	Bit0
0x00X0 IDR0	R	ID28	ID27	ID26	ID25	ID24	ID23	ID22	ID21
	W								
0x00X1 IDR1	R	ID20	ID19	ID18	SRR (=1)	IDE (=1)	ID17	ID16	ID15
	W								
0x00X2 IDR2	R	ID14	ID13	ID12	ID11	ID10	ID9	ID8	ID7
	W								
0x00X3 IDR3	R	ID6	ID5	ID4	ID3	ID2	ID1	ID0	RTR
	W								
0x00X4 DSR0	R	DB7	DB6	DB5	DB4	DB3	DB2	DB1	DB0
	W								
0x00X5 DSR1	R	DB7	DB6	DB5	DB4	DB3	DB2	DB1	DB0
	W								
0x00X6 DSR2	R	DB7	DB6	DB5	DB4	DB3	DB2	DB1	DB0
	W								
0x00X7 DSR3	R	DB7	DB6	DB5	DB4	DB3	DB2	DB1	DB0
	W								
0x00X8 DSR4	R	DB7	DB6	DB5	DB4	DB3	DB2	DB1	DB0
	W								
0x00X9 DSR5	R	DB7	DB6	DB5	DB4	DB3	DB2	DB1	DB0
	W								
0x00XA DSR6	R	DB7	DB6	DB5	DB4	DB3	DB2	DB1	DB0
	W								
0x00XB DSR7	R	DB7	DB6	DB5	DB4	DB3	DB2	DB1	DB0
	W								
0x00XC DLR	R					DLC3	DLC2	DLC1	DLC0
	W								

Figure 18-24. Receive/Transmit Message Buffer — Extended Identifier Mapping (continued)

Register Name	Bit 7	6	5	4	3	2	1	Bit0

= Unused, always read 'x'

Read:

- For transmit buffers, anytime when TXEx flag is set (see Section 18.3.2.7, "MSCAN Transmitter Flag Register (CANTFLG)") and the corresponding transmit buffer is selected in CANTBSEL (see Section 18.3.2.11, "MSCAN Transmit Buffer Selection Register (CANTBSEL)").
- For receive buffers, only when RXF flag is set (see Section 18.3.2.5, "MSCAN Receiver Flag Register (CANRFLG)").

Write:

- For transmit buffers, anytime when TXEx flag is set (see Section 18.3.2.7, "MSCAN Transmitter Flag Register (CANTFLG)") and the corresponding transmit buffer is selected in CANTBSEL (see Section 18.3.2.11, "MSCAN Transmit Buffer Selection Register (CANTBSEL)").
- Unimplemented for receive buffers.

Reset: Undefined because of RAM-based implementation

Figure 18-25. Receive/Transmit Message Buffer — Standard Identifier Mapping

Register Name		Bit 7	6	5	4	3	2	1	Bit 0
IDR0 0x00X0	R	ID10	ID9	ID8	ID7	ID6	ID5	ID4	ID3
	W								
IDR1 0x00X1	R	ID2	ID1	ID0	RTR	IDE (=0)			
	W								
IDR2 0x00X2	R								
	W								
IDR3 0x00X3	R								
	W								

= Unused, always read 'x'

18.3.3.1 Identifier Registers (IDR0–IDR3)

The identifier registers for an extended format identifier consist of a total of 32 bits: ID[28:0], SRR, IDE, and RTR. The identifier registers for a standard format identifier consist of a total of 13 bits: ID[10:0], RTR, and IDE.

18.3.3.1.1 IDR0–IDR3 for Extended Identifier Mapping

Module Base + 0x00X0

	7	6	5	4	3	2	1	0
R W	ID28	ID27	ID26	ID25	ID24	ID23	ID22	ID21
Reset:	x	x	x	x	x	x	x	x

Figure 18-26. Identifier Register 0 (IDR0) — Extended Identifier Mapping

Table 18-27. IDR0 Register Field Descriptions — Extended

Field	Description
7-0 ID[28:21]	**Extended Format Identifier** — The identifiers consist of 29 bits (ID[28:0]) for the extended format. ID28 is the most significant bit and is transmitted first on the CAN bus during the arbitration procedure. The priority of an identifier is defined to be highest for the smallest binary number.

Module Base + 0x00X1

	7	6	5	4	3	2	1	0
R W	ID20	ID19	ID18	SRR (=1)	IDE (=1)	ID17	ID16	ID15
Reset:	x	x	x	x	x	x	x	x

Figure 18-27. Identifier Register 1 (IDR1) — Extended Identifier Mapping

Table 18-28. IDR1 Register Field Descriptions — Extended

Field	Description
7-5 ID[20:18]	**Extended Format Identifier —** The identifiers consist of 29 bits (ID[28:0]) for the extended format. ID28 is the most significant bit and is transmitted first on the CAN bus during the arbitration procedure. The priority of an identifier is defined to be highest for the smallest binary number.
4 SRR	**Substitute Remote Request** — This fixed recessive bit is used only in extended format. It must be set to 1 by the user for transmission buffers and is stored as received on the CAN bus for receive buffers.
3 IDE	**ID Extended** — This flag indicates whether the extended or standard identifier format is applied in this buffer. In the case of a receive buffer, the flag is set as received and indicates to the CPU how to process the buffer identifier registers. In the case of a transmit buffer, the flag indicates to the MSCAN what type of identifier to send. 0 Standard format (11 bit) 1 Extended format (29 bit)
2-0 ID[17:15]	**Extended Format Identifier —** The identifiers consist of 29 bits (ID[28:0]) for the extended format. ID28 is the most significant bit and is transmitted first on the CAN bus during the arbitration procedure. The priority of an identifier is defined to be highest for the smallest binary number.

Module Base + 0x00X2

	7	6	5	4	3	2	1	0
R W	ID14	ID13	ID12	ID11	ID10	ID9	ID8	ID7
Reset:	x	x	x	x	x	x	x	x

Figure 18-28. Identifier Register 2 (IDR2) — Extended Identifier Mapping

Table 18-29. IDR2 Register Field Descriptions — Extended

Field	Description
7-0 ID[14:7]	**Extended Format Identifier —** The identifiers consist of 29 bits (ID[28:0]) for the extended format. ID28 is the most significant bit and is transmitted first on the CAN bus during the arbitration procedure. The priority of an identifier is defined to be highest for the smallest binary number.

Module Base + 0x00X3

	7	6	5	4	3	2	1	0
R W	ID6	ID5	ID4	ID3	ID2	ID1	ID0	RTR
Reset:	x	x	x	x	x	x	x	x

Figure 18-29. Identifier Register 3 (IDR3) — Extended Identifier Mapping

Table 18-30. IDR3 Register Field Descriptions — Extended

Field	Description
7-1 ID[6:0]	**Extended Format Identifier —** The identifiers consist of 29 bits (ID[28:0]) for the extended format. ID28 is the most significant bit and is transmitted first on the CAN bus during the arbitration procedure. The priority of an identifier is defined to be highest for the smallest binary number.
0 RTR	**Remote Transmission Request** — This flag reflects the status of the remote transmission request bit in the CAN frame. In the case of a receive buffer, it indicates the status of the received frame and supports the transmission of an answering frame in software. In the case of a transmit buffer, this flag defines the setting of the RTR bit to be sent. 0 Data frame 1 Remote frame

18.3.3.1.2 IDR0–IDR3 for Standard Identifier Mapping

Module Base + 0x00X0

	7	6	5	4	3	2	1	0
R W	ID10	ID9	ID8	ID7	ID6	ID5	ID4	ID3
Reset:	x	x	x	x	x	x	x	x

Figure 18-30. Identifier Register 0 — Standard Mapping

Table 18-31. IDR0 Register Field Descriptions — Standard

Field	Description
7-0 ID[10:3]	**Standard Format Identifier —** The identifiers consist of 11 bits (ID[10:0]) for the standard format. ID10 is the most significant bit and is transmitted first on the CAN bus during the arbitration procedure. The priority of an identifier is defined to be highest for the smallest binary number. See also ID bits in Table 18-32.

Module Base + 0x00X1

	7	6	5	4	3	2	1	0
R W	ID2	ID1	ID0	RTR	IDE (=0)			
Reset:	x	x	x	x	x	x	x	x

= Unused; always read ‘x’

Figure 18-31. Identifier Register 1 — Standard Mapping

Table 18-32. IDR1 Register Field Descriptions

Field	Description
7-5 ID[2:0]	**Standard Format Identifier —** The identifiers consist of 11 bits (ID[10:0]) for the standard format. ID10 is the most significant bit and is transmitted first on the CAN bus during the arbitration procedure. The priority of an identifier is defined to be highest for the smallest binary number. See also ID bits in Table 18-31.
4 RTR	**Remote Transmission Request** — This flag reflects the status of the Remote Transmission Request bit in the CAN frame. In the case of a receive buffer, it indicates the status of the received frame and supports the transmission of an answering frame in software. In the case of a transmit buffer, this flag defines the setting of the RTR bit to be sent. 0 Data frame 1 Remote frame
3 IDE	**ID Extended** — This flag indicates whether the extended or standard identifier format is applied in this buffer. In the case of a receive buffer, the flag is set as received and indicates to the CPU how to process the buffer identifier registers. In the case of a transmit buffer, the flag indicates to the MSCAN what type of identifier to send. 0 Standard format (11 bit) 1 Extended format (29 bit)

Module Base + 0x00X2

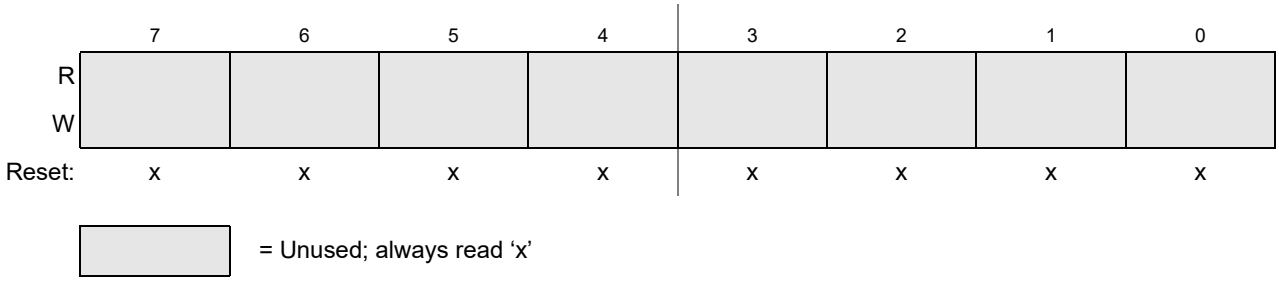

Figure 18-32. Identifier Register 2 — Standard Mapping

Module Base + 0x00X3

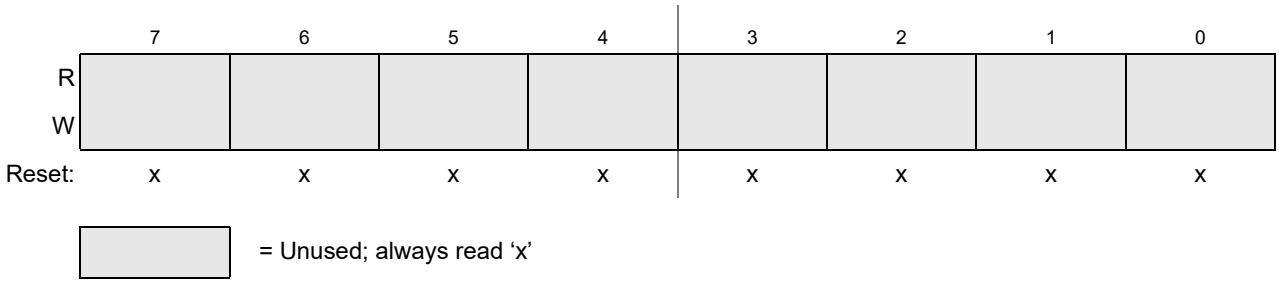

Figure 18-33. Identifier Register 3 — Standard Mapping

18.3.3.2 Data Segment Registers (DSR0-7)

The eight data segment registers, each with bits DB[7:0], contain the data to be transmitted or received. The number of bytes to be transmitted or received is determined by the data length code in the corresponding DLR register.

Module Base + 0x00X4 to Module Base + 0x00XB

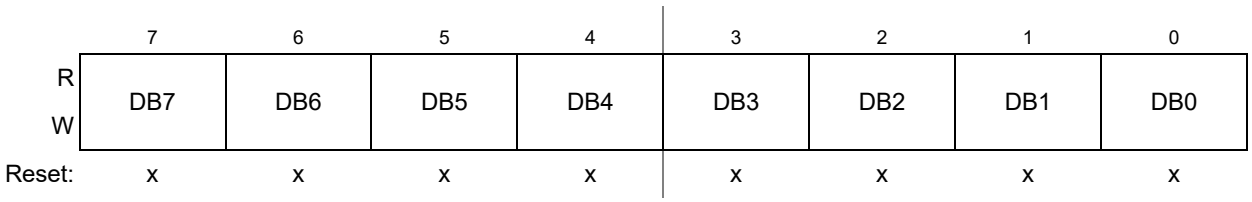

Figure 18-34. Data Segment Registers (DSR0–DSR7) — Extended Identifier Mapping

Table 18-33. DSR0–DSR7 Register Field Descriptions

Field	Description
7-0 DB[7:0]	**Data bits 7-0**

18.3.3.3 Data Length Register (DLR)

This register keeps the data length field of the CAN frame.

Module Base + 0x00XC

	7	6	5	4	3	2	1	0
R W					DLC3	DLC2	DLC1	DLC0
Reset:	x	x	x	x	x	x	x	x

= Unused; always read “x”

Figure 18-35. Data Length Register (DLR) — Extended Identifier Mapping

Table 18-34. DLR Register Field Descriptions

Field	Description
3-0 DLC[3:0]	**Data Length Code Bits** — The data length code contains the number of bytes (data byte count) of the respective message. During the transmission of a remote frame, the data length code is transmitted as programmed while the number of transmitted data bytes is always 0. The data byte count ranges from 0 to 8 for a data frame. Table 18-35 shows the effect of setting the DLC bits.

Table 18-35. Data Length Codes

Data Length Code				Data Byte Count
DLC3	DLC2	DLC1	DLC0	
0	0	0	0	0
0	0	0	1	1
0	0	1	0	2
0	0	1	1	3
0	1	0	0	4
0	1	0	1	5
0	1	1	0	6
0	1	1	1	7
1	0	0	0	8

18.3.3.4 Transmit Buffer Priority Register (TBPR)

This register defines the local priority of the associated message buffer. The local priority is used for the internal prioritization process of the MSCAN and is defined to be highest for the smallest binary number. The MSCAN implements the following internal prioritization mechanisms:

- All transmission buffers with a cleared TXEx flag participate in the prioritization immediately before the SOF (start of frame) is sent.
- The transmission buffer with the lowest local priority field wins the prioritization.

In cases of more than one buffer having the same lowest priority, the message buffer with the lower index number wins.

Module Base + 0x00XD — Access: User read/write[1]

	7	6	5	4	3	2	1	0
R W	PRIO7	PRIO6	PRIO5	PRIO4	PRIO3	PRIO2	PRIO1	PRIO0
Reset:	0	0	0	0	0	0	0	0

Figure 18-36. Transmit Buffer Priority Register (TBPR)

1 Read: Anytime when TXEx flag is set (see Section 18.3.2.7, “MSCAN Transmitter Flag Register (CANTFLG)”) and the corresponding transmit buffer is selected in CANTBSEL (see Section 18.3.2.11, “MSCAN Transmit Buffer Selection Register (CANTBSEL)”)
Write: Anytime when TXEx flag is set (see Section 18.3.2.7, “MSCAN Transmitter Flag Register (CANTFLG)”) and the corresponding transmit buffer is selected in CANTBSEL (see Section 18.3.2.11, “MSCAN Transmit Buffer Selection Register (CANTBSEL)”)

18.3.3.5 Time Stamp Register (TSRH–TSRL)

If the TIME bit is enabled, the MSCAN will write a time stamp to the respective registers in the active transmit or receive buffer right after the EOF of a valid message on the CAN bus (see Section 18.3.2.1, “MSCAN Control Register 0 (CANCTL0)”). In case of a transmission, the CPU can only read the time stamp after the respective transmit buffer has been flagged empty.

The timer value, which is used for stamping, is taken from a free running internal CAN bit clock. A timer overrun is not indicated by the MSCAN. The timer is reset (all bits set to 0) during initialization mode. The CPU can only read the time stamp registers.

Module Base + 0x00XE — Access: User read/write[1]

	7	6	5	4	3	2	1	0
R	TSR15	TSR14	TSR13	TSR12	TSR11	TSR10	TSR9	TSR8
W								
Reset:	x	x	x	x	x	x	x	x

Figure 18-37. Time Stamp Register — High Byte (TSRH)

1 Read: For transmit buffers: Anytime when TXEx flag is set (see Section 18.3.2.7, “MSCAN Transmitter Flag Register (CANTFLG)”) and the corresponding transmit buffer is selected in CANTBSEL (see Section 18.3.2.11, “MSCAN Transmit Buffer Selection Register (CANTBSEL)”). For receive buffers: Anytime when RXF is set.
Write: Unimplemented

Module Base + 0x00XF

Access: User read/write[1]

	7	6	5	4	3	2	1	0
R	TSR7	TSR6	TSR5	TSR4	TSR3	TSR2	TSR1	TSR0
W								
Reset:	x	x	x	x	x	x	x	x

Figure 18-38. Time Stamp Register — Low Byte (TSRL)

[1] Read: or transmit buffers: Anytime when TXEx flag is set (see Section 18.3.2.7, “MSCAN Transmitter Flag Register (CANTFLG)”) and the corresponding transmit buffer is selected in CANTBSEL (see Section 18.3.2.11, “MSCAN Transmit Buffer Selection Register (CANTBSEL)”). For receive buffers: Anytime when RXF is set.
Write: Unimplemented

18.4 Functional Description

18.4.1 General

This section provides a complete functional description of the MSCAN.

18.4.2 Message Storage

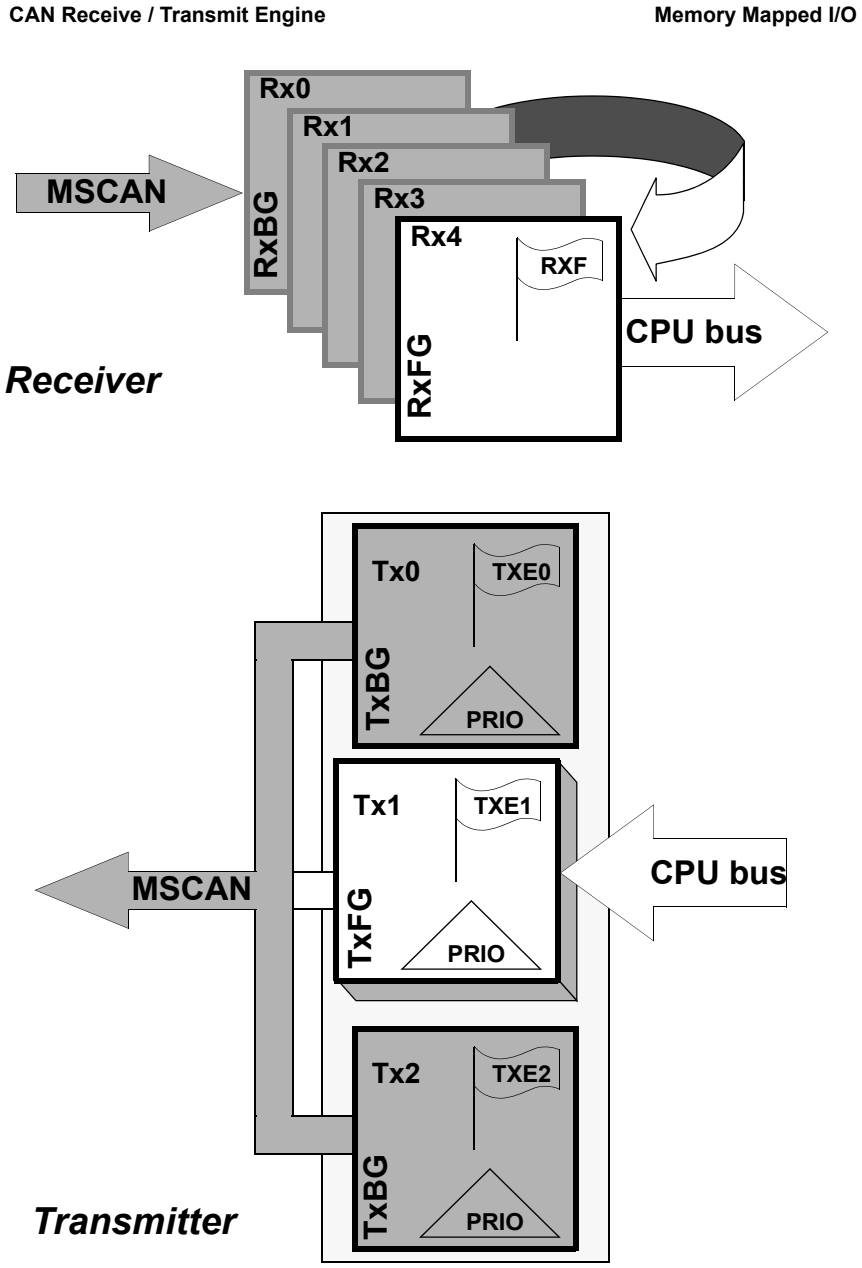

Figure 18-39. User Model for Message Buffer Organization

The MSCAN facilitates a sophisticated message storage system which addresses the requirements of a broad range of network applications.

18.4.2.1 Message Transmit Background

Modern application layer software is built upon two fundamental assumptions:

- Any CAN node is able to send out a stream of scheduled messages without releasing the CAN bus between the two messages. Such nodes arbitrate for the CAN bus immediately after sending the previous message and only release the CAN bus in case of lost arbitration.
- The internal message queue within any CAN node is organized such that the highest priority message is sent out first, if more than one message is ready to be sent.

The behavior described in the bullets above cannot be achieved with a single transmit buffer. That buffer must be reloaded immediately after the previous message is sent. This loading process lasts a finite amount of time and must be completed within the inter-frame sequence (IFS) to be able to send an uninterrupted stream of messages. Even if this is feasible for limited CAN bus speeds, it requires that the CPU reacts with short latencies to the transmit interrupt.

A double buffer scheme de-couples the reloading of the transmit buffer from the actual message sending and, therefore, reduces the reactiveness requirements of the CPU. Problems can arise if the sending of a message is finished while the CPU re-loads the second buffer. No buffer would then be ready for transmission, and the CAN bus would be released.

At least three transmit buffers are required to meet the first of the above requirements under all circumstances. The MSCAN has three transmit buffers.

The second requirement calls for some sort of internal prioritization which the MSCAN implements with the “local priority” concept described in Section 18.4.2.2, “Transmit Structures.”

18.4.2.2 Transmit Structures

The MSCAN triple transmit buffer scheme optimizes real-time performance by allowing multiple messages to be set up in advance. The three buffers are arranged as shown in Figure 18-39.

All three buffers have a 13-byte data structure similar to the outline of the receive buffers (see Section 18.3.3, “Programmer’s Model of Message Storage”). An additional Transmit Buffer Priority Register (TBPR) contains an 8-bit local priority field (PRIO) (see Section 18.3.3.4, “Transmit Buffer Priority Register (TBPR)”). The remaining two bytes are used for time stamping of a message, if required (see Section 18.3.3.5, “Time Stamp Register (TSRH–TSRL)”).

To transmit a message, the CPU must identify an available transmit buffer, which is indicated by a set transmitter buffer empty (TXEx) flag (see Section 18.3.2.7, “MSCAN Transmitter Flag Register (CANTFLG)”). If a transmit buffer is available, the CPU must set a pointer to this buffer by writing to the CANTBSEL register (see Section 18.3.2.11, “MSCAN Transmit Buffer Selection Register (CANTBSEL)”). This makes the respective buffer accessible within the CANTXFG address space (see Section 18.3.3, “Programmer’s Model of Message Storage”). The algorithmic feature associated with the CANTBSEL register simplifies the transmit buffer selection. In addition, this scheme makes the handler software simpler because only one address area is applicable for the transmit process, and the required address space is minimized.

The CPU then stores the identifier, the control bits, and the data content into one of the transmit buffers. Finally, the buffer is flagged as ready for transmission by clearing the associated TXE flag.

The MSCAN then schedules the message for transmission and signals the successful transmission of the buffer by setting the associated TXE flag. A transmit interrupt (see Section 18.4.7.2, “Transmit Interrupt”) is generated[1] when TXEx is set and can be used to drive the application software to re-load the buffer.

If more than one buffer is scheduled for transmission when the CAN bus becomes available for arbitration, the MSCAN uses the local priority setting of the three buffers to determine the prioritization. For this purpose, every transmit buffer has an 8-bit local priority field (PRIO). The application software programs this field when the message is set up. The local priority reflects the priority of this particular message relative to the set of messages being transmitted from this node. The lowest binary value of the PRIO field is defined to be the highest priority. The internal scheduling process takes place whenever the MSCAN arbitrates for the CAN bus. This is also the case after the occurrence of a transmission error.

When a high priority message is scheduled by the application software, it may become necessary to abort a lower priority message in one of the three transmit buffers. Because messages that are already in transmission cannot be aborted, the user must request the abort by setting the corresponding abort request bit (ABTRQ) (see Section 18.3.2.9, “MSCAN Transmitter Message Abort Request Register (CANTARQ)”.) The MSCAN then grants the request, if possible, by:

1. Setting the corresponding abort acknowledge flag (ABTAK) in the CANTAAK register.
2. Setting the associated TXE flag to release the buffer.
3. Generating a transmit interrupt. The transmit interrupt handler software can determine from the setting of the ABTAK flag whether the message was aborted (ABTAK = 1) or sent (ABTAK = 0).

18.4.2.3 Receive Structures

The received messages are stored in a five stage input FIFO. The five message buffers are alternately mapped into a single memory area (see Figure 18-39). The background receive buffer (RxBG) is exclusively associated with the MSCAN, but the foreground receive buffer (RxFG) is addressable by the CPU (see Figure 18-39). This scheme simplifies the handler software because only one address area is applicable for the receive process.

All receive buffers have a size of 15 bytes to store the CAN control bits, the identifier (standard or extended), the data contents, and a time stamp, if enabled (see Section 18.3.3, “Programmer’s Model of Message Storage”).

The receiver full flag (RXF) (see Section 18.3.2.5, “MSCAN Receiver Flag Register (CANRFLG)”) signals the status of the foreground receive buffer. When the buffer contains a correctly received message with a matching identifier, this flag is set.

On reception, each message is checked to see whether it passes the filter (see Section 18.4.3, “Identifier Acceptance Filter”) and simultaneously is written into the active RxBG. After successful reception of a valid message, the MSCAN shifts the content of RxBG into the receiver FIFO, sets the RXF flag, and generates a receive interrupt[2] (see Section 18.4.7.3, “Receive Interrupt”) to the CPU. The user’s receive handler must read the received message from the RxFG and then reset the RXF flag to acknowledge the interrupt and to release the foreground buffer. A new message, which can follow immediately after the IFS field of the CAN frame, is received into the next available RxBG. If the MSCAN receives an invalid

1. The transmit interrupt occurs only if not masked. A polling scheme can be applied on TXEx also.
2. The receive interrupt occurs only if not masked. A polling scheme can be applied on RXF also.

message in its RxBG (wrong identifier, transmission errors, etc.) the actual contents of the buffer will be over-written by the next message. The buffer will then not be shifted into the FIFO.

When the MSCAN module is transmitting, the MSCAN receives its own transmitted messages into the background receive buffer, RxBG, but does not shift it into the receiver FIFO, generate a receive interrupt, or acknowledge its own messages on the CAN bus. The exception to this rule is in loopback mode (see Section 18.3.2.2, “MSCAN Control Register 1 (CANCTL1)”) where the MSCAN treats its own messages exactly like all other incoming messages. The MSCAN receives its own transmitted messages in the event that it loses arbitration. If arbitration is lost, the MSCAN must be prepared to become a receiver.

An overrun condition occurs when all receive message buffers in the FIFO are filled with correctly received messages with accepted identifiers and another message is correctly received from the CAN bus with an accepted identifier. The latter message is discarded and an error interrupt with overrun indication is generated if enabled (see Section 18.4.7.5, “Error Interrupt”). The MSCAN remains able to transmit messages while the receiver FIFO is being filled, but all incoming messages are discarded. As soon as a receive buffer in the FIFO is available again, new valid messages will be accepted.

18.4.3 Identifier Acceptance Filter

The MSCAN identifier acceptance registers (see Section 18.3.2.12, “MSCAN Identifier Acceptance Control Register (CANIDAC)”) define the acceptable patterns of the standard or extended identifier (ID[10:0] or ID[28:0]). Any of these bits can be marked ‘don’t care’ in the MSCAN identifier mask registers (see Section 18.3.2.18, “MSCAN Identifier Mask Registers (CANIDMR0–CANIDMR7)”).

A filter hit is indicated to the application software by a set receive buffer full flag (RXF = 1) and three bits in the CANIDAC register (see Section 18.3.2.12, “MSCAN Identifier Acceptance Control Register (CANIDAC)”). These identifier hit flags (IDHIT[2:0]) clearly identify the filter section that caused the acceptance. They simplify the application software’s task to identify the cause of the receiver interrupt. If more than one hit occurs (two or more filters match), the lower hit has priority.

A very flexible programmable generic identifier acceptance filter has been introduced to reduce the CPU interrupt loading. The filter is programmable to operate in four different modes:

- Two identifier acceptance filters, each to be applied to:
  - The full 29 bits of the extended identifier and to the following bits of the CAN 2.0B frame:
    - Remote transmission request (RTR)
    - Identifier extension (IDE)
    - Substitute remote request (SRR)
  - The 11 bits of the standard identifier plus the RTR and IDE bits of the CAN 2.0A/B messages. This mode implements two filters for a full length CAN 2.0B compliant extended identifier. Although this mode can be used for standard identifiers, it is recommended to use the four or eight identifier acceptance filters.
    Figure 18-40 shows how the first 32-bit filter bank (CANIDAR0–CANIDAR3, CANIDMR0–CANIDMR3) produces a filter 0 hit. Similarly, the second filter bank (CANIDAR4–CANIDAR7, CANIDMR4–CANIDMR7) produces a filter 1 hit.
- Four identifier acceptance filters, each to be applied to:

— The 14 most significant bits of the extended identifier plus the SRR and IDE bits of CAN 2.0B messages.

— The 11 bits of the standard identifier, the RTR and IDE bits of CAN 2.0A/B messages. Figure 18-41 shows how the first 32-bit filter bank (CANIDAR0–CANIDAR3, CANIDMR0–CANIDMR3) produces filter 0 and 1 hits. Similarly, the second filter bank (CANIDAR4–CANIDAR7, CANIDMR4–CANIDMR7) produces filter 2 and 3 hits.

- Eight identifier acceptance filters, each to be applied to the first 8 bits of the identifier. This mode implements eight independent filters for the first 8 bits of a CAN 2.0A/B compliant standard identifier or a CAN 2.0B compliant extended identifier.
  Figure 18-42 shows how the first 32-bit filter bank (CANIDAR0–CANIDAR3, CANIDMR0–CANIDMR3) produces filter 0 to 3 hits. Similarly, the second filter bank (CANIDAR4–CANIDAR7, CANIDMR4–CANIDMR7) produces filter 4 to 7 hits.
- Closed filter. No CAN message is copied into the foreground buffer RxFG, and the RXF flag is never set.

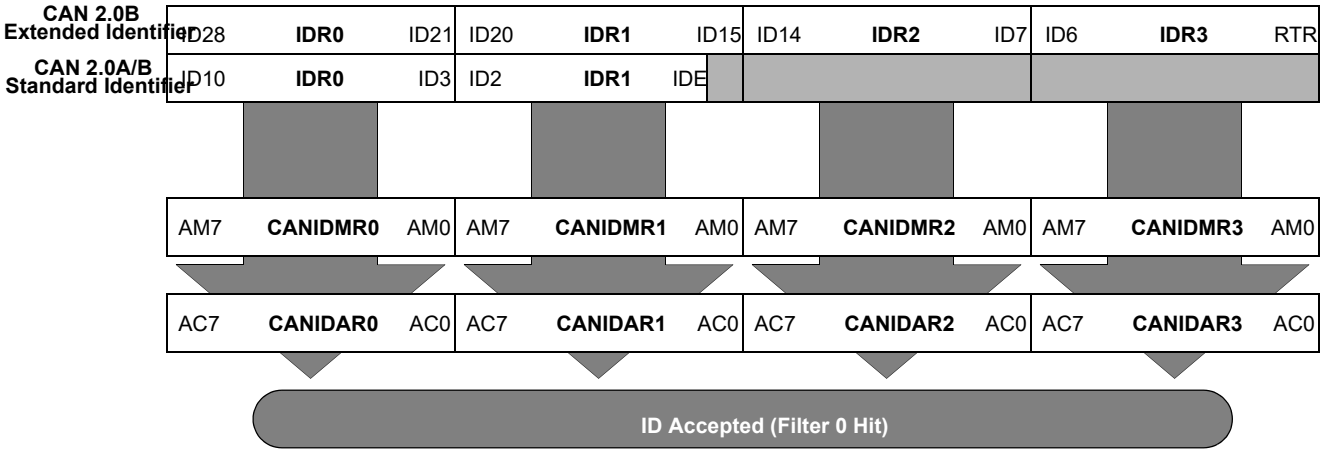

Figure 18-40. 32-bit Maskable Identifier Acceptance Filter

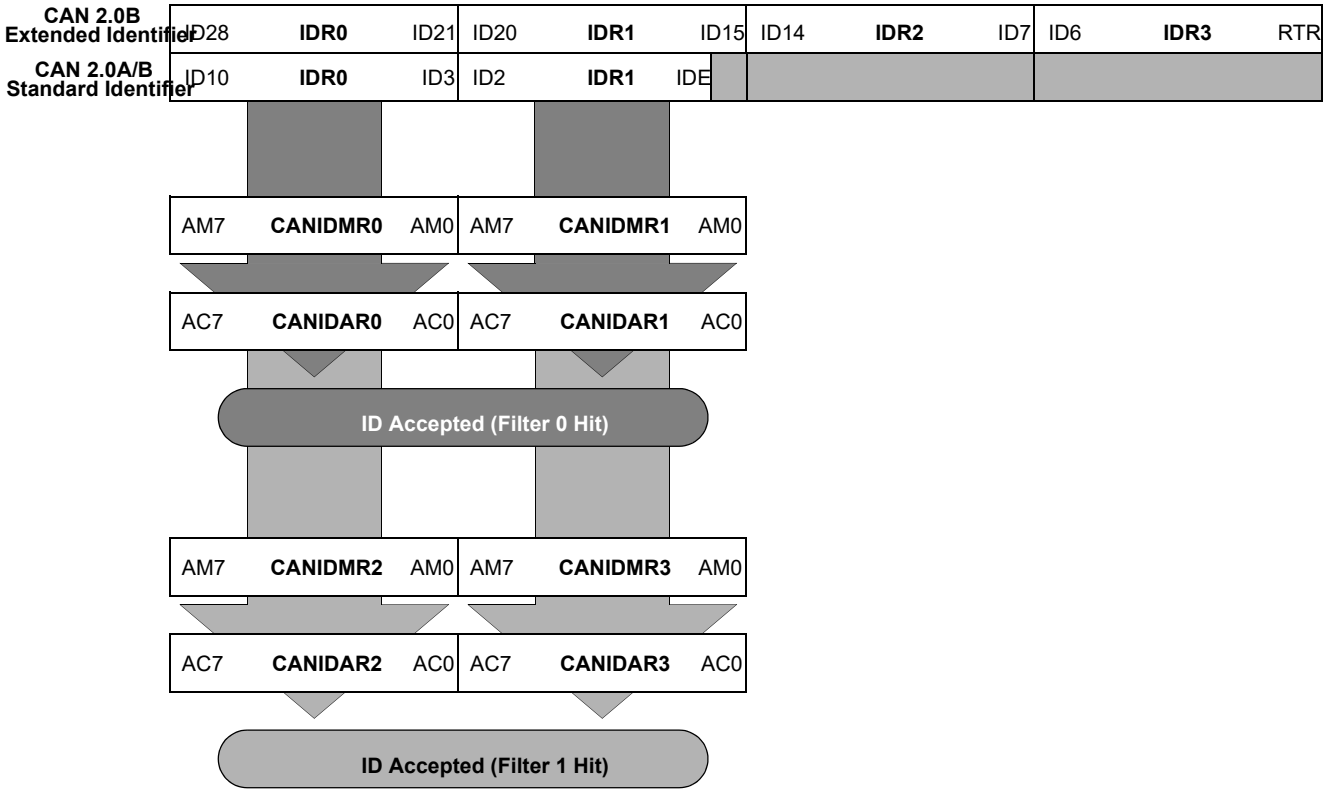

Figure 18-41. 16-bit Maskable Identifier Acceptance Filters

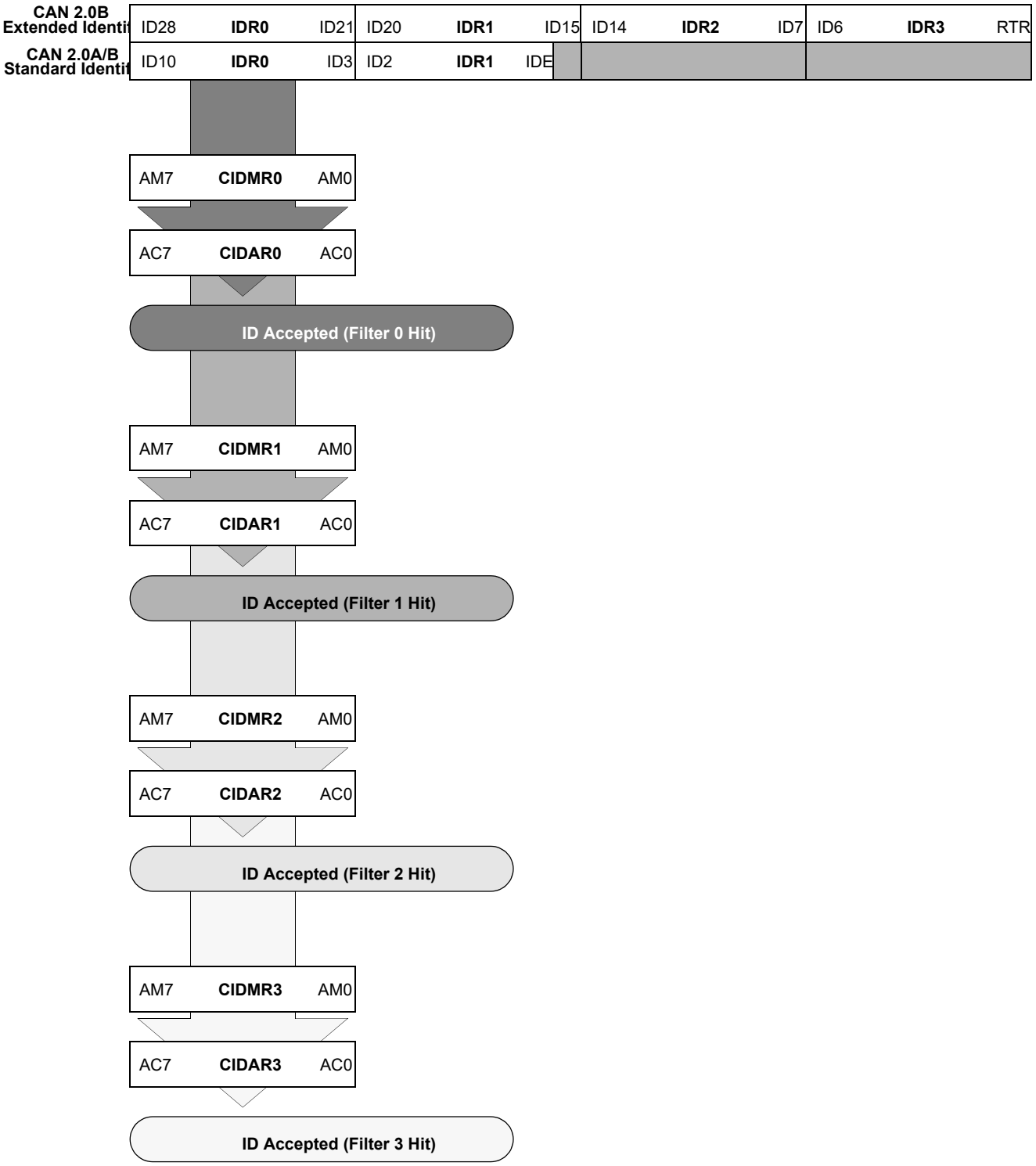

Figure 18-42. 8-bit Maskable Identifier Acceptance Filters

18.4.3.1 Protocol Violation Protection

The MSCAN protects the user from accidentally violating the CAN protocol through programming errors. The protection logic implements the following features:

- The receive and transmit error counters cannot be written or otherwise manipulated.
- All registers which control the configuration of the MSCAN cannot be modified while the MSCAN is on-line. The MSCAN has to be in Initialization Mode. The corresponding INITRQ/INITAK handshake bits in the CANCTL0/CANCTL1 registers (see Section 18.3.2.1, “MSCAN Control Register 0 (CANCTL0)”) serve as a lock to protect the following registers:
  - MSCAN control 1 register (CANCTL1)
  - MSCAN bus timing registers 0 and 1 (CANBTR0, CANBTR1)
  - MSCAN identifier acceptance control register (CANIDAC)
  - MSCAN identifier acceptance registers (CANIDAR0–CANIDAR7)
  - MSCAN identifier mask registers (CANIDMR0–CANIDMR7)
- The TXCAN is immediately forced to a recessive state when the MSCAN goes into the power down mode or initialization mode (see Section 18.4.5.6, “MSCAN Power Down Mode,” and Section 18.4.4.5, “MSCAN Initialization Mode”).
- The MSCAN enable bit (CANE) is writable only once in normal system operation modes, which provides further protection against inadvertently disabling the MSCAN.

18.4.3.2 Clock System

Figure 18-43 shows the structure of the MSCAN clock generation circuitry.

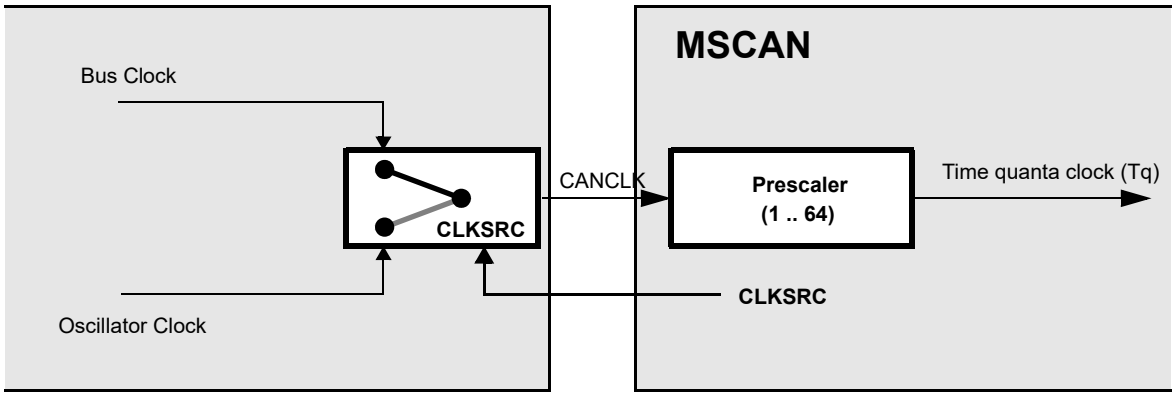

Figure 18-43. MSCAN Clocking Scheme

The clock source bit (CLKSRC) in the CANCTL1 register (18.3.2.2/18-576) defines whether the internal CANCLK is connected to the output of a crystal oscillator (oscillator clock) or to the bus clock.

The clock source has to be chosen such that the tight oscillator tolerance requirements (up to 0.4%) of the CAN protocol are met. Additionally, for high CAN bus rates (1 Mbps), a 45% to 55% duty cycle of the clock is required.

If the bus clock is generated from a PLL, it is recommended to select the oscillator clock rather than the bus clock due to jitter considerations, especially at the faster CAN bus rates.

For microcontrollers without a clock and reset generator (CRG), CANCLK is driven from the crystal oscillator (oscillator clock).

A programmable prescaler generates the time quanta (Tq) clock from CANCLK. A time quantum is the atomic unit of time handled by the MSCAN.

Eqn. 18-2

$$\Gamma q = \frac{f_{CANCLK}}{(Prescaler\ \ value}$$

A bit time is subdivided into three segments as described in the Bosch CAN 2.0A/B specification. (see Figure 18-44):

- SYNC_SEG: This segment has a fixed length of one time quantum. Signal edges are expected to happen within this section.
- Time Segment 1: This segment includes the PROP_SEG and the PHASE_SEG1 of the CAN standard. It can be programmed by setting the parameter TSEG1 to consist of 4 to 16 time quanta.
- Time Segment 2: This segment represents the PHASE_SEG2 of the CAN standard. It can be programmed by setting the TSEG2 parameter to be 2 to 8 time quanta long.

Eqn. 18-3

$$Bit\ \ Rate = \frac{f_{Tq}}{(number\ \ of\ \ Time\ \ Quanta)}$$

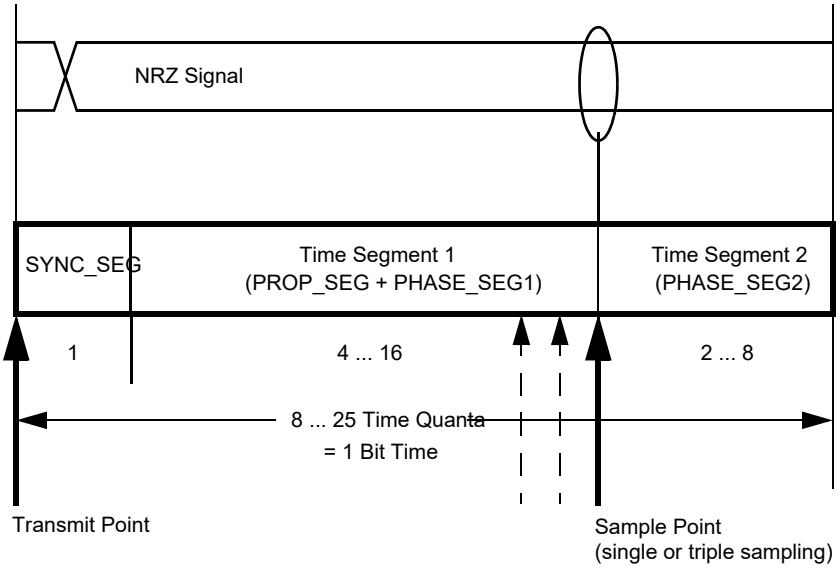

Figure 18-44. Segments within the Bit Time

Table 18-36. Time Segment Syntax

Syntax	Description
SYNC_SEG	System expects transitions to occur on the CAN bus during this period.
Transmit Point	A node in transmit mode transfers a new value to the CAN bus at this point.
Sample Point	A node in receive mode samples the CAN bus at this point. If the three samples per bit option is selected, then this point marks the position of the third sample.

The synchronization jump width (see the Bosch CAN 2.0A/B specification for details) can be programmed in a range of 1 to 4 time quanta by setting the SJW parameter.

The SYNC_SEG, TSEG1, TSEG2, and SJW parameters are set by programming the MSCAN bus timing registers (CANBTR0, CANBTR1) (see Section 18.3.2.3, “MSCAN Bus Timing Register 0 (CANBTR0)” and Section 18.3.2.4, “MSCAN Bus Timing Register 1 (CANBTR1)”).

Table 18-37 gives an overview of the Bosch CAN 2.0A/B specification compliant segment settings and the related parameter values.

NOTE

It is the user’s responsibility to ensure the bit time settings are in compliance with the CAN standard.

Table 18-37. Bosch CAN 2.0A/B Compliant Bit Time Segment Settings

Time Segment 1	TSEG1	Time Segment 2	TSEG2	Synchronization Jump Width	SJW
5 .. 10	4 .. 9	2	1	1 .. 2	0 .. 1
4 .. 11	3 .. 10	3	2	1 .. 3	0 .. 2
5 .. 12	4 .. 11	4	3	1 .. 4	0 .. 3
6 .. 13	5 .. 12	5	4	1 .. 4	0 .. 3
7 .. 14	6 .. 13	6	5	1 .. 4	0 .. 3
8 .. 15	7 .. 14	7	6	1 .. 4	0 .. 3
9 .. 16	8 .. 15	8	7	1 .. 4	0 .. 3

18.4.4 Modes of Operation

18.4.4.1 Normal System Operating Modes

The MSCAN module behaves as described within this specification in all normal system operating modes. Write restrictions exist for some registers.

18.4.4.2 Special System Operating Modes

The MSCAN module behaves as described within this specification in all special system operating modes. Write restrictions which exist on specific registers in normal modes are lifted for test purposes in special modes.

18.4.4.3 Emulation Modes

In all emulation modes, the MSCAN module behaves just like in normal system operating modes as described within this specification.

18.4.4.4 Listen-Only Mode

In an optional CAN bus monitoring mode (listen-only), the CAN node is able to receive valid data frames and valid remote frames, but it sends only “recessive” bits on the CAN bus. In addition, it cannot start a transmission.

If the MAC sub-layer is required to send a “dominant” bit (ACK bit, overload flag, or active error flag), the bit is rerouted internally so that the MAC sub-layer monitors this “dominant” bit, although the CAN bus may remain in recessive state externally.

18.4.4.5 MSCAN Initialization Mode

The MSCAN enters initialization mode when it is enabled (CANE=1).

When entering initialization mode during operation, any on-going transmission or reception is immediately aborted and synchronization to the CAN bus is lost, potentially causing CAN protocol violations. To protect the CAN bus system from fatal consequences of violations, the MSCAN immediately drives TXCAN into a recessive state.

NOTE

The user is responsible for ensuring that the MSCAN is not active when initialization mode is entered. The recommended procedure is to bring the MSCAN into sleep mode (SLPRQ = 1 and SLPAK = 1) before setting the INITRQ bit in the CANCTL0 register. Otherwise, the abort of an on-going message can cause an error condition and can impact other CAN bus devices.

In initialization mode, the MSCAN is stopped. However, interface registers remain accessible. This mode is used to reset the CANCTL0, CANRFLG, CANRIER, CANTFLG, CANTIER, CANTARQ, CANTAAK, and CANTBSEL registers to their default values. In addition, the MSCAN enables the configuration of the CANBTR0, CANBTR1 bit timing registers; CANIDAC; and the CANIDAR, CANIDMR message filters. See Section 18.3.2.1, “MSCAN Control Register 0 (CANCTL0),” for a detailed description of the initialization mode.

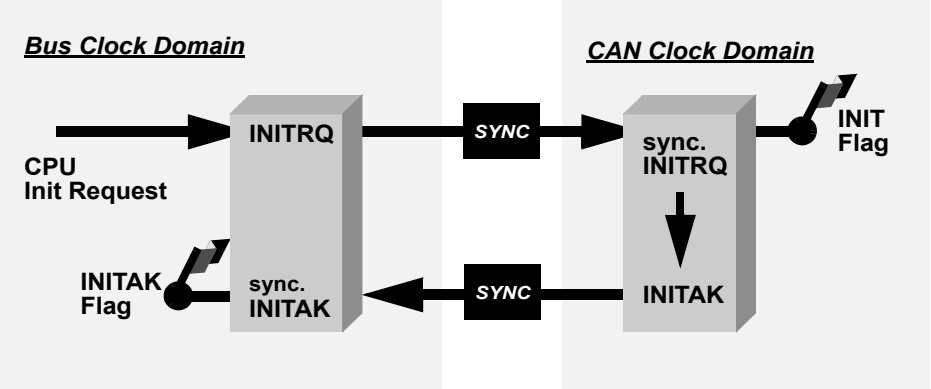

Figure 18-45. Initialization Request/Acknowledge Cycle

Due to independent clock domains within the MSCAN, INITRQ must be synchronized to all domains by using a special handshake mechanism. This handshake causes additional synchronization delay (see Figure 18-45).

If there is no message transfer ongoing on the CAN bus, the minimum delay will be two additional bus clocks and three additional CAN clocks. When all parts of the MSCAN are in initialization mode, the INITAK flag is set. The application software must use INITAK as a handshake indication for the request (INITRQ) to go into initialization mode.

NOTE

The CPU cannot clear INITRQ before initialization mode (INITRQ = 1 and INITAK = 1) is active.

18.4.5 Low-Power Options

If the MSCAN is disabled (CANE = 0), the MSCAN clocks are stopped for power saving.

If the MSCAN is enabled (CANE = 1), the MSCAN has two additional modes with reduced power consumption, compared to normal mode: sleep and power down mode. In sleep mode, power consumption is reduced by stopping all clocks except those to access the registers from the CPU side. In power down mode, all clocks are stopped and no power is consumed.

Table 18-38 summarizes the combinations of MSCAN and CPU modes. A particular combination of modes is entered by the given settings on the CSWAI and SLPRQ/SLPAK bits.

Table 18-38. CPU vs. MSCAN Operating Modes

CPU Mode	MSCAN Mode			
	Normal	Reduced Power Consumption		
		Sleep	Power Down	Disabled (CANE=0)
RUN	CSWAI = X[1] SLPRQ = 0 SLPAK = 0	CSWAI = X SLPRQ = 1 SLPAK = 1		CSWAI = X SLPRQ = X SLPAK = X
WAIT	CSWAI = 0 SLPRQ = 0 SLPAK = 0	CSWAI = 0 SLPRQ = 1 SLPAK = 1	CSWAI = 1 SLPRQ = X SLPAK = X	CSWAI = X SLPRQ = X SLPAK = X
STOP			CSWAI = X SLPRQ = X SLPAK = X	CSWAI = X SLPRQ = X SLPAK = X

1 'X' means don't care.

18.4.5.1 Operation in Run Mode

As shown in Table 18-38, only MSCAN sleep mode is available as low power option when the CPU is in run mode.

18.4.5.2 Operation in Wait Mode

The WAI instruction puts the MCU in a low power consumption stand-by mode. If the CSWAI bit is set, additional power can be saved in power down mode because the CPU clocks are stopped. After leaving this power down mode, the MSCAN restarts and enters normal mode again.

While the CPU is in wait mode, the MSCAN can be operated in normal mode and generate interrupts (registers can be accessed via background debug mode).

18.4.5.3 Operation in Stop Mode

The STOP instruction puts the MCU in a low power consumption stand-by mode. In stop mode, the MSCAN is set in power down mode regardless of the value of the SLPRQ/SLPAK and CSWAI bits (Table 18-38).

18.4.5.4 MSCAN Normal Mode

This is a non-power-saving mode. Enabling the MSCAN puts the module from disabled mode into normal mode. In this mode the module can either be in initialization mode or out of initialization mode. See Section 18.4.4.5, "MSCAN Initialization Mode".

18.4.5.5 MSCAN Sleep Mode

The CPU can request the MSCAN to enter this low power mode by asserting the SLPRQ bit in the CANCTL0 register. The time when the MSCAN enters sleep mode depends on a fixed synchronization delay and its current activity:

- If there are one or more message buffers scheduled for transmission (TXEx = 0), the MSCAN will continue to transmit until all transmit message buffers are empty (TXEx = 1, transmitted successfully or aborted) and then goes into sleep mode.
- If the MSCAN is receiving, it continues to receive and goes into sleep mode as soon as the CAN bus next becomes idle.
- If the MSCAN is neither transmitting nor receiving, it immediately goes into sleep mode.

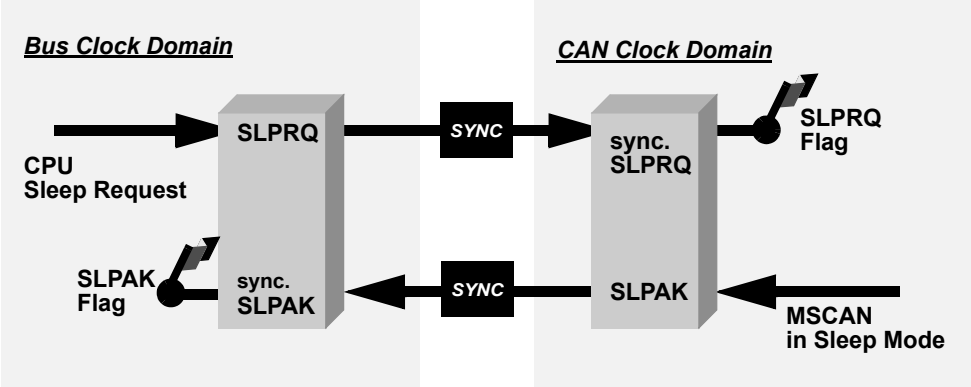

Figure 18-46. Sleep Request / Acknowledge Cycle

NOTE

The application software must avoid setting up a transmission (by clearing one or more TXEx flag(s)) and immediately request sleep mode (by setting SLPRQ). Whether the MSCAN starts transmitting or goes into sleep mode directly depends on the exact sequence of operations.

If sleep mode is active, the SLPRQ and SLPAK bits are set (Figure 18-46). The application software must use SLPAK as a handshake indication for the request (SLPRQ) to go into sleep mode.

When in sleep mode (SLPRQ = 1 and SLPAK = 1), the MSCAN stops its internal clocks. However, clocks that allow register accesses from the CPU side continue to run.

If the MSCAN is in bus-off state, it stops counting the 128 occurrences of 11 consecutive recessive bits due to the stopped clocks. TXCAN remains in a recessive state. If RXF = 1, the message can be read and RXF can be cleared. Shifting a new message into the foreground buffer of the receiver FIFO (RxFG) does not take place while in sleep mode.

It is possible to access the transmit buffers and to clear the associated TXE flags. No message abort takes place while in sleep mode.

If the WUPE bit in CANCTL0 is not asserted, the MSCAN will mask any activity it detects on CAN. RXCAN is therefore held internally in a recessive state. This locks the MSCAN in sleep mode. WUPE must be set before entering sleep mode to take effect.

The MSCAN is able to leave sleep mode (wake up) only when:

- CAN bus activity occurs and WUPE = 1

  or
- the CPU clears the SLPRQ bit

NOTE

The CPU cannot clear the SLPRQ bit before sleep mode (SLPRQ = 1 and SLPAK = 1) is active.

After wake-up, the MSCAN waits for 11 consecutive recessive bits to synchronize to the CAN bus. As a consequence, if the MSCAN is woken-up by a CAN frame, this frame is not received.

The receive message buffers (RxFG and RxBG) contain messages if they were received before sleep mode was entered. All pending actions will be executed upon wake-up; copying of RxBG into RxFG, message aborts and message transmissions. If the MSCAN remains in bus-off state after sleep mode was exited, it continues counting the 128 occurrences of 11 consecutive recessive bits.

18.4.5.6 MSCAN Power Down Mode

The MSCAN is in power down mode (Table 18-38) when

- CPU is in stop mode

  or
- CPU is in wait mode and the CSWAI bit is set

When entering the power down mode, the MSCAN immediately stops all ongoing transmissions and receptions, potentially causing CAN protocol violations. To protect the CAN bus system from fatal consequences of violations to the above rule, the MSCAN immediately drives TXCAN into a recessive state.

NOTE

The user is responsible for ensuring that the MSCAN is not active when power down mode is entered. The recommended procedure is to bring the MSCAN into Sleep mode before the STOP or WAI instruction (if CSWAI is set) is executed. Otherwise, the abort of an ongoing message can cause an error condition and impact other CAN bus devices.

In power down mode, all clocks are stopped and no registers can be accessed. If the MSCAN was not in sleep mode before power down mode became active, the module performs an internal recovery cycle after powering up. This causes some fixed delay before the module enters normal mode again.

18.4.5.7 Disabled Mode

The MSCAN is in disabled mode out of reset (CANE=0). All module clocks are stopped for power saving, however the register map can still be accessed as specified.

18.4.5.8 Programmable Wake-Up Function

The MSCAN can be programmed to wake up from sleep or power down mode as soon as CAN bus activity is detected (see control bit WUPE in MSCAN Control Register 0 (CANCTL0). The sensitivity to existing CAN bus action can be modified by applying a low-pass filter function to the RXCAN input line (see control bit WUPM in Section 18.3.2.2, “MSCAN Control Register 1 (CANCTL1)”).

This feature can be used to protect the MSCAN from wake-up due to short glitches on the CAN bus lines. Such glitches can result from—for example—electromagnetic interference within noisy environments.

18.4.6 Reset Initialization

The reset state of each individual bit is listed in Section 18.3.2, “Register Descriptions,” which details all the registers and their bit-fields.

18.4.7 Interrupts

This section describes all interrupts originated by the MSCAN. It documents the enable bits and generated flags. Each interrupt is listed and described separately.

18.4.7.1 Description of Interrupt Operation

The MSCAN supports four interrupt vectors (see Table 18-39), any of which can be individually masked (for details see Section 18.3.2.6, “MSCAN Receiver Interrupt Enable Register (CANRIER)” to Section 18.3.2.8, “MSCAN Transmitter Interrupt Enable Register (CANTIER)”).

Refer to the device overview section to determine the dedicated interrupt vector addresses.

Table 18-39. Interrupt Vectors

Interrupt Source	CCR Mask	Local Enable
Wake-Up Interrupt (WUPIF)	I bit	CANRIER (WUPIE)
Error Interrupts Interrupt (CSCIF, OVRIF)	I bit	CANRIER (CSCIE, OVRIE)
Receive Interrupt (RXF)	I bit	CANRIER (RXFIE)
Transmit Interrupts (TXE[2:0])	I bit	CANTIER (TXEIE[2:0])

18.4.7.2 Transmit Interrupt

At least one of the three transmit buffers is empty (not scheduled) and can be loaded to schedule a message for transmission. The TXEx flag of the empty message buffer is set.

18.4.7.3 Receive Interrupt

A message is successfully received and shifted into the foreground buffer (RxFG) of the receiver FIFO. This interrupt is generated immediately after receiving the EOF symbol. The RXF flag is set. If there are multiple messages in the receiver FIFO, the RXF flag is set as soon as the next message is shifted to the foreground buffer.

18.4.7.4 Wake-Up Interrupt

A wake-up interrupt is generated if activity on the CAN bus occurs during MSCAN sleep or power-down mode.

NOTE

This interrupt can only occur if the MSCAN was in sleep mode (SLPRQ = 1 and SLPAK = 1) before entering power down mode, the wake-up option is enabled (WUPE = 1), and the wake-up interrupt is enabled (WUPIE = 1).

18.4.7.5 Error Interrupt

An error interrupt is generated if an overrun of the receiver FIFO, error, warning, or bus-off condition occurrs. MSCAN Receiver Flag Register (CANRFLG) indicates one of the following conditions:

- **Overrun** — An overrun condition of the receiver FIFO as described in Section 18.4.2.3, “Receive Structures,” occurred.
- **CAN Status Change** — The actual value of the transmit and receive error counters control the CAN bus state of the MSCAN. As soon as the error counters skip into a critical range (Tx/Rx-warning, Tx/Rx-error, bus-off) the MSCAN flags an error condition. The status change, which caused the error condition, is indicated by the TSTAT and RSTAT flags (see Section 18.3.2.5, “MSCAN Receiver Flag Register (CANRFLG)” and Section 18.3.2.6, “MSCAN Receiver Interrupt Enable Register (CANRIER)”).

18.4.7.6 Interrupt Acknowledge

Interrupts are directly associated with one or more status flags in either the MSCAN Receiver Flag Register (CANRFLG) or the MSCAN Transmitter Flag Register (CANTFLG). Interrupts are pending as long as one of the corresponding flags is set. The flags in CANRFLG and CANTFLG must be reset within the interrupt handler to handshake the interrupt. The flags are reset by writing a 1 to the corresponding bit position. A flag cannot be cleared if the respective condition prevails.

NOTE

It must be guaranteed that the CPU clears only the bit causing the current interrupt. For this reason, bit manipulation instructions (BSET) must not be used to clear interrupt flags. These instructions may cause accidental clearing of interrupt flags which are set after entering the current interrupt service routine.

18.5 Initialization/Application Information

18.5.1 MSCAN initialization

The procedure to initially start up the MSCAN module out of reset is as follows:

1. Assert CANE
2. Write to the configuration registers in initialization mode
3. Clear INITRQ to leave initialization mode

If the configuration of registers which are only writable in initialization mode shall be changed:

1. Bring the module into sleep mode by setting SLPRQ and awaiting SLPAK to assert after the CAN bus becomes idle.
2. Enter initialization mode: assert INITRQ and await INITAK
3. Write to the configuration registers in initialization mode
4. Clear INITRQ to leave initialization mode and continue

18.5.2 Bus-Off Recovery

The bus-off recovery is user configurable. The bus-off state can either be left automatically or on user request.

For reasons of backwards compatibility, the MSCAN defaults to automatic recovery after reset. In this case, the MSCAN will become error active again after counting 128 occurrences of 11 consecutive recessive bits on the CAN bus (see the Bosch CAN 2.0 A/B specification for details).

If the MSCAN is configured for user request (BORM set in MSCAN Control Register 1 (CANCTL1)), the recovery from bus-off starts after both independent events have become true:

- 128 occurrences of 11 consecutive recessive bits on the CAN bus have been monitored
- BOHOLD in MSCAN Miscellaneous Register (CANMISC) has been cleared by the user

These two events may occur in any order.

Chapter 19
Pulse-Width Modulator (S12PWM8B8CV2)

19.1 Introduction

The Version 2 of S12 PWM module is a channel scalable and optimized implementation of S12 PWM8B8C Version 1. The channel is scalable in pairs from PWM0 to PWM7 and the available channel number is 2, 4, 6 and 8. The shutdown feature has been removed and the flexibility to select one of four clock sources per channel has improved. If the corresponding channels exist and shutdown feature is not used, the Version 2 is fully software compatible to Version 1.

19.1.1 Features

The scalable PWM block includes these distinctive features:

- Up to eight independent PWM channels, scalable in pairs (PWM0 to PWM7)
- Available channel number could be 2, 4, 6, 8 (refer to device specification for exact number)
- Programmable period and duty cycle for each channel
- Dedicated counter for each PWM channel
- Programmable PWM enable/disable for each channel
- Software selection of PWM duty pulse polarity for each channel
- Period and duty cycle are double buffered. Change takes effect when the end of the effective period is reached (PWM counter reaches zero) or when the channel is disabled.
- Programmable center or left aligned outputs on individual channels
- Up to eight 8-bit channel or four 16-bit channel PWM resolution
- Four clock sources (A, B, SA, and SB) provide for a wide range of frequencies
- Programmable clock select logic

19.1.2 Modes of Operation

There is a software programmable option for low power consumption in wait mode that disables the input clock to the prescaler.

In freeze mode there is a software programmable option to disable the input clock to the prescaler. This is useful for emulation.

Wait: The prescaler keeps on running, unless PSWAI in PWMCTL is set to 1.

Freeze: The prescaler keeps on running, unless PFRZ in PWMCTL is set to 1.

19.1.3 Block Diagram

Figure 19-1 shows the block diagram for the 8-bit up to 8-channel scalable PWM block.

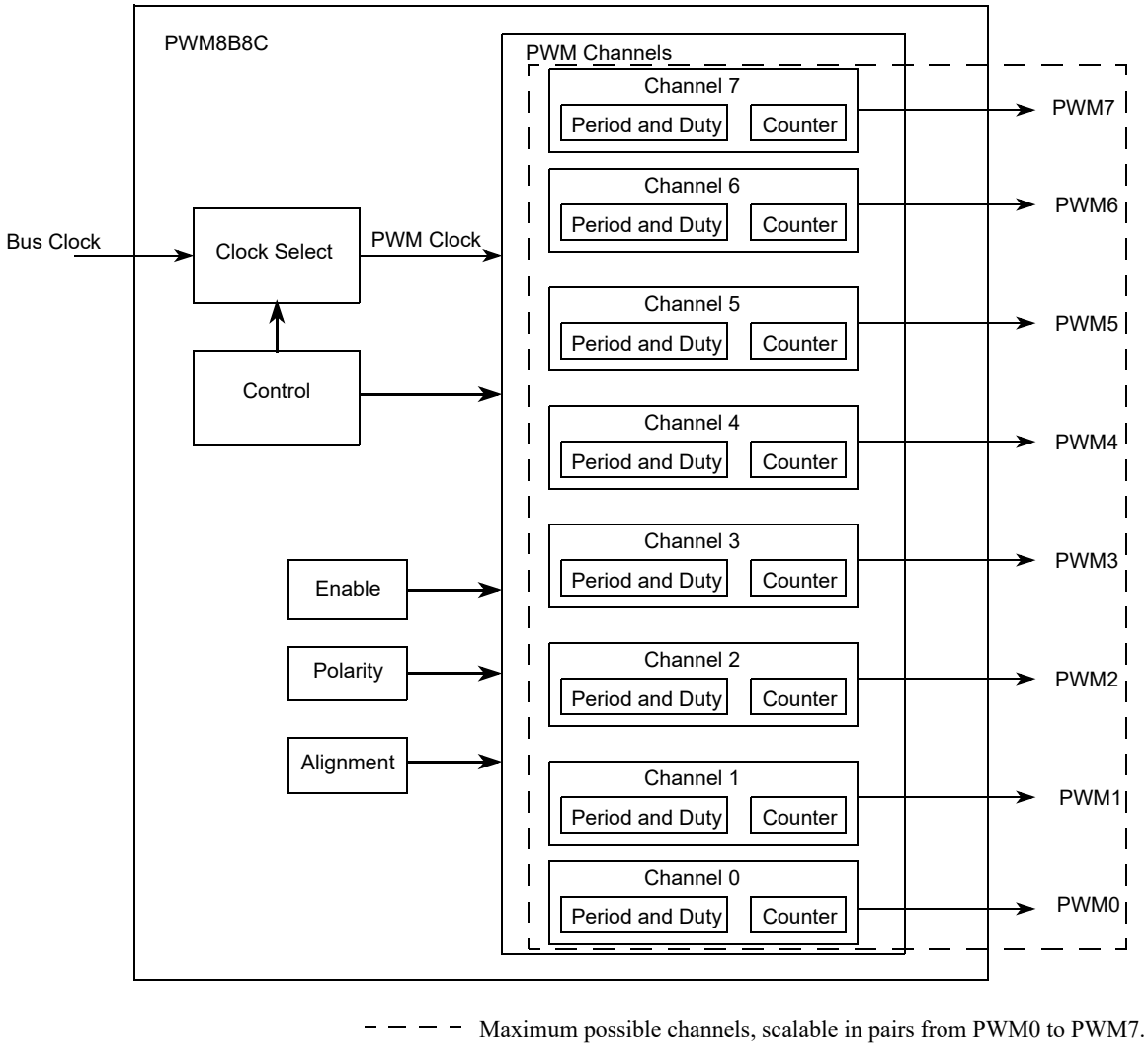

Figure 19-1. Scalable PWM Block Diagram

19.2 External Signal Description

The scalable PWM module has a selected number of external pins. Refer to device specification for exact number.

19.2.1 PWM7 - PWM0 — PWM Channel 7 - 0

Those pins serve as waveform output of PWM channel 7 - 0.

19.3 Memory Map and Register Definition

19.3.1 Module Memory Map

This section describes the content of the registers in the scalable PWM module. The base address of the scalable PWM module is determined at the MCU level when the MCU is defined. The register decode map is fixed and begins at the first address of the module address offset. The figure below shows the registers associated with the scalable PWM and their relative offset from the base address. The register detail description follows the order they appear in the register map.

Reserved bits within a register will always read as 0 and the write will be unimplemented. Unimplemented functions are indicated by shading the bit.

NOTE

Register Address = Base Address + Address Offset, where the Base Address is defined at the MCU level and the Address Offset is defined at the module level.

19.3.2 Register Descriptions

This section describes in detail all the registers and register bits in the scalable PWM module.

Register Name		Bit 7	6	5	4	3	2	1	Bit 0
0x0000 PWME[1]	R	PWME7	PWME6	PWME5	PWME4	PWME3	PWME2	PWME1	PWME0
	W								
0x0001 PWMPOL[1]	R	PPOL7	PPOL6	PPOL5	PPOL4	PPOL3	PPOL2	PPOL1	PPOL0
	W								
0x0002 PWMCLK[1]	R	PCLK7	PCLKL6	PCLK5	PCLK4	PCLK3	PCLK2	PCLK1	PCLK0
	W								
0x0003 PWMPRCLK	R	0	PCKB2	PCKB1	PCKB0	0	PCKA2	PCKA1	PCKA0
	W								
0x0004 PWMCAE[1]	R	CAE7	CAE6	CAE5	CAE4	CAE3	CAE2	CAE1	CAE0
	W								
0x0005 PWMCTL[1]	R	CON67	CON45	CON23	CON01	PSWAI	PFRZ	0	0
	W								
0x0006 PWMCLKAB[1]	R	PCLKAB7	PCLKAB6	PCLKAB5	PCLKAB4	PCLKAB3	PCLKAB2	PCLKAB1	PCLKAB0
	W								

= Unimplemented or Reserved

Figure 19-2. The scalable PWM Register Summary (Sheet 1 of 4)

Register Name		Bit 7	6	5	4	3	2	1	Bit 0
0x0007 RESERVED	R	0	0	0	0	0	0	0	0
	W								
0x0008 PWMSCLA	R	Bit 7	6	5	4	3	2	1	Bit 0
	W								
0x0009 PWMSCLB	R	Bit 7	6	5	4	3	2	1	Bit 0
	W								
0x000A RESERVED	R	0	0	0	0	0	0	0	0
	W								
0x000B RESERVED	R	0	0	0	0	0	0	0	0
	W								
0x000C PWMCNT0[2]	R	Bit 7	6	5	4	3	2	1	Bit 0
	W	0	0	0	0	0	0	0	0
0x000D PWMCNT1[2]	R	Bit 7	6	5	4	3	2	1	Bit 0
	W	0	0	0	0	0	0	0	0
0x000E PWMCNT2[2]	R	Bit 7	6	5	4	3	2	1	Bit 0
	W	0	0	0	0	0	0	0	0
0x000F PWMCNT3[2]	R	Bit 7	6	5	4	3	2	1	Bit 0
	W	0	0	0	0	0	0	0	0
0x0010 PWMCNT4[2]	R	Bit 7	6	5	4	3	2	1	Bit 0
	W	0	0	0	0	0	0	0	0
0x0011 PWMCNT5[2]	R	Bit 7	6	5	4	3	2	1	Bit 0
	W	0	0	0	0	0	0	0	0
0x0012 PWMCNT6[2]	R	Bit 7	6	5	4	3	2	1	Bit 0
	W	0	0	0	0	0	0	0	0
0x0013 PWMCNT7[2]	R	Bit 7	6	5	4	3	2	1	Bit 0
	W	0	0	0	0	0	0	0	0
0x0014 PWMPER0[2]	R	Bit 7	6	5	4	3	2	1	Bit 0
	W								
0x0015 PWMPER1[2]	R	Bit 7	6	5	4	3	2	1	Bit 0
	W								

= Unimplemented or Reserved

Figure 19-2. The scalable PWM Register Summary (Sheet 1 of 4)

Register Name		Bit 7	6	5	4	3	2	1	Bit 0
0x0016 PWMPER2[2]	R	Bit 7	6	5	4	3	2	1	Bit 0
	W								
0x0017 PWMPER3[2]	R	Bit 7	6	5	4	3	2	1	Bit 0
	W								
0x0018 PWMPER4[2]	R	Bit 7	6	5	4	3	2	1	Bit 0
	W								
0x0019 PWMPER5[2]	R	Bit 7	6	5	4	3	2	1	Bit 0
	W								
0x001A PWMPER6[2]	R	Bit 7	6	5	4	3	2	1	Bit 0
	W								
0x001B PWMPER7[2]	R	Bit 7	6	5	4	3	2	1	Bit 0
	W								
0x001C PWMDTY0[2]	R	Bit 7	6	5	4	3	2	1	Bit 0
	W								
0x001D PWMDTY1[2]	R	Bit 7	6	5	4	3	2	1	Bit 0
	W								
0x001E PWMDTY2[2]	R	Bit 7	6	5	4	3	2	1	Bit 0
	W								
0x001F PWMDTY3[2]	R	Bit 7	6	5	4	3	2	1	Bit 0
	W								
0x0010 PWMDTY4[2]	R	Bit 7	6	5	4	3	2	1	Bit 0
	W								
0x0021 PWMDTY5[2]	R	Bit 7	6	5	4	3	2	1	Bit 0
	W								
0x0022 PWMDTY6[2]	R	Bit 7	6	5	4	3	2	1	Bit 0
	W								
0x0023 PWMDTY7[2]	R	Bit 7	6	5	4	3	2	1	Bit 0
	W								
0x0024 RESERVED	R	0	0	0	0	0	0	0	0
	W								
		= Unimplemented or Reserved							

Figure 19-2. The scalable PWM Register Summary (Sheet 1 of 4)

Register Name		Bit 7	6	5	4	3	2	1	Bit 0
0x0025 RESERVED	R	0	0	0	0	0	0	0	0
	W								
0x0026 RESERVED	R	0	0	0	0	0	0	0	0
	W								
0x0027 RESERVED	R	0	0	0	0	0	0	0	0
	W								

= Unimplemented or Reserved

Figure 19-2. The scalable PWM Register Summary (Sheet 1 of 4)

1 The related bit is available only if corresponding channel exists.

2 The register is available only if corresponding channel exists.

19.3.2.1 PWM Enable Register (PWME)

Each PWM channel has an enable bit (PWMEx) to start its waveform output. When any of the PWMEx bits are set (PWMEx = 1), the associated PWM output is enabled immediately. However, the actual PWM waveform is not available on the associated PWM output until its clock source begins its next cycle due to the synchronization of PWMEx and the clock source.

NOTE

The first PWM cycle after enabling the channel can be irregular.

An exception to this is when channels are concatenated. Once concatenated mode is enabled (CONxx bits set in PWMCTL register), enabling/disabling the corresponding 16-bit PWM channel is controlled by the low order PWMEx bit. In this case, the high order bytes PWMEx bits have no effect and their corresponding PWM output lines are disabled.

While in run mode, if all existing PWM channels are disabled (PWMEx–0 = 0), the prescaler counter shuts off for power savings.

Module Base + 0x0000

	7	6	5	4	3	2	1	0
R W	PWME7	PWME6	PWME5	PWME4	PWME3	PWME2	PWME1	PWME0
Reset	0	0	0	0	0	0	0	0

Figure 19-3. PWM Enable Register (PWME)

Read: Anytime

Write: Anytime

Table 19-2. PWME Field Descriptions

Note: Bits related to available channels have functional significance. Writing to unavailable bits has no effect. Read from unavailable bits return a zero

Field	Description
7 PWME7	Pulse Width Channel 7 Enable 0 Pulse width channel 7 is disabled. 1 Pulse width channel 7 is enabled. The pulse modulated signal becomes available at PWM output bit 7 when its clock source begins its next cycle.
6 PWME6	Pulse Width Channel 6 Enable 0 Pulse width channel 6 is disabled. 1 Pulse width channel 6 is enabled. The pulse modulated signal becomes available at PWM output bit 6 when its clock source begins its next cycle. If CON67=1, then bit has no effect and PWM output line 6 is disabled.
5 PWME5	Pulse Width Channel 5 Enable 0 Pulse width channel 5 is disabled. 1 Pulse width channel 5 is enabled. The pulse modulated signal becomes available at PWM output bit 5 when its clock source begins its next cycle.
4 PWME4	Pulse Width Channel 4 Enable 0 Pulse width channel 4 is disabled. 1 Pulse width channel 4 is enabled. The pulse modulated signal becomes available at PWM, output bit 4 when its clock source begins its next cycle. If CON45 = 1, then bit has no effect and PWM output line 4 is disabled.
3 PWME3	Pulse Width Channel 3 Enable 0 Pulse width channel 3 is disabled. 1 Pulse width channel 3 is enabled. The pulse modulated signal becomes available at PWM, output bit 3 when its clock source begins its next cycle.
2 PWME2	Pulse Width Channel 2 Enable 0 Pulse width channel 2 is disabled. 1 Pulse width channel 2 is enabled. The pulse modulated signal becomes available at PWM, output bit 2 when its clock source begins its next cycle. If CON23 = 1, then bit has no effect and PWM output line 2 is disabled.
1 PWME1	Pulse Width Channel 1 Enable 0 Pulse width channel 1 is disabled. 1 Pulse width channel 1 is enabled. The pulse modulated signal becomes available at PWM, output bit 1 when its clock source begins its next cycle.
0 PWME0	Pulse Width Channel 0 Enable 0 Pulse width channel 0 is disabled. 1 Pulse width channel 0 is enabled. The pulse modulated signal becomes available at PWM, output bit 0 when its clock source begins its next cycle. If CON01 = 1, then bit has no effect and PWM output line 0 is disabled.

19.3.2.2 PWM Polarity Register (PWMPOL)

The starting polarity of each PWM channel waveform is determined by the associated PPOLx bit in the PWMPOL register. If the polarity bit is one, the PWM channel output is high at the beginning of the cycle and then goes low when the duty count is reached. Conversely, if the polarity bit is zero, the output starts low and then goes high when the duty count is reached.

Module Base + 0x0001

	7	6	5	4	3	2	1	0
R W	PPOL7	PPOL6	PPOL5	PPOL4	PPOL3	PPOL2	PPOL1	PPOL0
Reset	0	0	0	0	0	0	0	0

Figure 19-4. PWM Polarity Register (PWMPOL)

Read: Anytime

Write: Anytime

NOTE

PPOLx register bits can be written anytime. If the polarity is changed while a PWM signal is being generated, a truncated or stretched pulse can occur during the transition

Table 19-3. PWMPOL Field Descriptions

Note: Bits related to available channels have functional significance. Writing to unavailable bits has no effect. Read from unavailable bits return a zero

Field	Description
7–0 PPOL[7:0]	**Pulse Width Channel 7–0 Polarity Bits** 0 PWM channel 7–0 outputs are low at the beginning of the period, then go high when the duty count is reached. 1 PWM channel 7–0 outputs are high at the beginning of the period, then go low when the duty count is reached.

19.3.2.3 PWM Clock Select Register (PWMCLK)

Each PWM channel has a choice of four clocks to use as the clock source for that channel as described below.

Module Base + 0x0002

	7	6	5	4	3	2	1	0
R W	PCLK7	PCLKL6	PCLK5	PCLK4	PCLK3	PCLK2	PCLK1	PCLK0
Reset	0	0	0	0	0	0	0	0

Figure 19-5. PWM Clock Select Register (PWMCLK)

Read: Anytime

Write: Anytime

NOTE

Register bits PCLK0 to PCLK7 can be written anytime. If a clock select is changed while a PWM signal is being generated, a truncated or stretched pulse can occur during the transition.

Table 19-4. PWMCLK Field Descriptions

Note: Bits related to available channels have functional significance. Writing to unavailable bits has no effect. Read from unavailable bits return a zero

Field	Description
7-0 PCLK[7:0]	Pulse Width Channel 7-0 Clock Select 0 Clock A or B is the clock source for PWM channel 7-0, as shown in Table 19-5 and Table 19-6. 1 Clock SA or SB is the clock source for PWM channel 7-0, as shown in Table 19-5 and Table 19-6.

The clock source of each PWM channel is determined by PCLKx bits in PWMCLK and PCLKABx bits in PWMCLKAB (see Section 19.3.2.7, “PWM Clock A/B Select Register (PWMCLKAB)). For Channel 0, 1, 4, 5, the selection is shown in Table 19-5; For Channel 2, 3, 6, 7, the selection is shown in Table 19-6.

Table 19-5. PWM Channel 0, 1, 4, 5 Clock Source Selection

PCLKAB[0,1,4,5]	PCLK[0,1,4,5]	Clock Source Selection
0	0	Clock A
0	1	Clock SA
1	0	Clock B
1	1	Clock SB

Table 19-6. PWM Channel 2, 3, 6, 7 Clock Source Selection

PCLKAB[2,3,6,7]	PCLK[2,3,6,7]	Clock Source Selection
0	0	Clock B
0	1	Clock SB
1	0	Clock A
1	1	Clock SA

19.3.2.4 PWM Prescale Clock Select Register (PWMPRCLK)

This register selects the prescale clock source for clocks A and B independently.

Module Base + 0x0003

	7	6	5	4	3	2	1	0
R	0	PCKB2	PCKB1	PCKB0	0	PCKA2	PCKA1	PCKA0
W								
Reset	0	0	0	0	0	0	0	0

= Unimplemented or Reserved

Figure 19-6. PWM Prescale Clock Select Register (PWMPRCLK)

Read: Anytime

Write: Anytime

NOTE

PCKB2–0 and PCKA2–0 register bits can be written anytime. If the clock pre-scale is changed while a PWM signal is being generated, a truncated or stretched pulse can occur during the transition.

Table 19-7. PWMPRCLK Field Descriptions

Field	Description
6–4 PCKB[2:0]	**Prescaler Select for Clock B** — Clock B is one of two clock sources which can be used for all channels. These three bits determine the rate of clock B, as shown in Table 19-8.
2–0 PCKA[2:0]	**Prescaler Select for Clock A** — Clock A is one of two clock sources which can be used for all channels. These three bits determine the rate of clock A, as shown in Table 19-8.

Table 19-8. Clock A or Clock B Prescaler Selects

PCKA/B2	PCKA/B1	PCKA/B0	Value of Clock A/B
0	0	0	Bus clock
0	0	1	Bus clock / 2
0	1	0	Bus clock / 4
0	1	1	Bus clock / 8
1	0	0	Bus clock / 16
1	0	1	Bus clock / 32
1	1	0	Bus clock / 64
1	1	1	Bus clock / 128

19.3.2.5 PWM Center Align Enable Register (PWMCAE)

The PWMCAE register contains eight control bits for the selection of center aligned outputs or left aligned outputs for each PWM channel. If the CAEx bit is set to a one, the corresponding PWM output will be center aligned. If the CAEx bit is cleared, the corresponding PWM output will be left aligned. See Section 19.4.2.5, “Left Aligned Outputs” and Section 19.4.2.6, “Center Aligned Outputs” for a more detailed description of the PWM output modes.

Module Base + 0x0004

	7	6	5	4	3	2	1	0
R W	CAE7	CAE6	CAE5	CAE4	CAE3	CAE2	CAE1	CAE0
Reset	0	0	0	0	0	0	0	0

Figure 19-7. PWM Center Align Enable Register (PWMCAE)

Read: Anytime

Write: Anytime

NOTE

Write these bits only when the corresponding channel is disabled.

Table 19-9. PWMCAE Field Descriptions

Note: Bits related to available channels have functional significance. Writing to unavailable bits has no effect. Read from unavailable bits return a zero

Field	Description
7–0 CAE[7:0]	Center Aligned Output Modes on Channels 7–0 0 Channels 7–0 operate in left aligned output mode. 1 Channels 7–0 operate in center aligned output mode.

19.3.2.6 PWM Control Register (PWMCTL)

The PWMCTL register provides for various control of the PWM module.

Module Base + 0x0005

	7	6	5	4	3	2	1	0
R	CON67	CON45	CON23	CON01	PSWAI	PFRZ	0	0
W								
Reset	0	0	0	0	0	0	0	0

= Unimplemented or Reserved

Figure 19-8. PWM Control Register (PWMCTL)

Read: Anytime

Write: Anytime

There are up to four control bits for concatenation, each of which is used to concatenate a pair of PWM channels into one 16-bit channel. If the corresponding channels do not exist on a particular derivative, then writes to these bits have no effect and reads will return zeroes. When channels 6 and 7are concatenated, channel 6 registers become the high order bytes of the double byte channel. When channels 4 and 5 are concatenated, channel 4 registers become the high order bytes of the double byte channel. When channels 2 and 3 are concatenated, channel 2 registers become the high order bytes of the double byte channel. When channels 0 and 1 are concatenated, channel 0 registers become the high order bytes of the double byte channel.

See Section 19.4.2.7, “PWM 16-Bit Functions” for a more detailed description of the concatenation PWM Function.

NOTE

Change these bits only when both corresponding channels are disabled.

Table 19-10. PWMCTL Field Descriptions

Note: Bits related to available channels have functional significance. Writing to unavailable bits has no effect. Read from unavailable bits return a zero

Field	Description
7 CON67	Concatenate Channels 6 and 7 0 Channels 6 and 7 are separate 8-bit PWMs. 1 Channels 6 and 7 are concatenated to create one 16-bit PWM channel. Channel 6 becomes the high order byte and channel 7 becomes the low order byte. Channel 7 output pin is used as the output for this 16-bit PWM (bit 7 of port PWMP). Channel 7 clock select control-bit determines the clock source, channel 7 polarity bit determines the polarity, channel 7 enable bit enables the output and channel 7 center aligned enable bit determines the output mode.
6 CON45	Concatenate Channels 4 and 5 0 Channels 4 and 5 are separate 8-bit PWMs. 1 Channels 4 and 5 are concatenated to create one 16-bit PWM channel. Channel 4 becomes the high order byte and channel 5 becomes the low order byte. Channel 5 output pin is used as the output for this 16-bit PWM (bit 5 of port PWMP). Channel 5 clock select control-bit determines the clock source, channel 5 polarity bit determines the polarity, channel 5 enable bit enables the output and channel 5 center aligned enable bit determines the output mode.
5 CON23	Concatenate Channels 2 and 3 0 Channels 2 and 3 are separate 8-bit PWMs. 1 Channels 2 and 3 are concatenated to create one 16-bit PWM channel. Channel 2 becomes the high order byte and channel 3 becomes the low order byte. Channel 3 output pin is used as the output for this 16-bit PWM (bit 3 of port PWMP). Channel 3 clock select control-bit determines the clock source, channel 3 polarity bit determines the polarity, channel 3 enable bit enables the output and channel 3 center aligned enable bit determines the output mode.
4 CON01	Concatenate Channels 0 and 1 0 Channels 0 and 1 are separate 8-bit PWMs. 1 Channels 0 and 1 are concatenated to create one 16-bit PWM channel. Channel 0 becomes the high order byte and channel 1 becomes the low order byte. Channel 1 output pin is used as the output for this 16-bit PWM (bit 1 of port PWMP). Channel 1 clock select control-bit determines the clock source, channel 1 polarity bit determines the polarity, channel 1 enable bit enables the output and channel 1 center aligned enable bit determines the output mode.
3 PSWAI	PWM Stops in Wait Mode — Enabling this bit allows for lower power consumption in wait mode by disabling the input clock to the prescaler. 0 Allow the clock to the prescaler to continue while in wait mode. 1 Stop the input clock to the prescaler whenever the MCU is in wait mode.
2 PFRZ	**PWM Counters Stop in Freeze Mode** — In freeze mode, there is an option to disable the input clock to the prescaler by setting the PFRZ bit in the PWMCTL register. If this bit is set, whenever the MCU is in freeze mode, the input clock to the prescaler is disabled. This feature is useful during emulation as it allows the PWM function to be suspended. In this way, the counters of the PWM can be stopped while in freeze mode so that once normal program flow is continued, the counters are re-enabled to simulate real-time operations. Since the registers can still be accessed in this mode, to re-enable the prescaler clock, either disable the PFRZ bit or exit freeze mode. 0 Allow PWM to continue while in freeze mode. 1 Disable PWM input clock to the prescaler whenever the part is in freeze mode. This is useful for emulation.

19.3.2.7 PWM Clock A/B Select Register (PWMCLKAB)

Each PWM channel has a choice of four clocks to use as the clock source for that channel as described below.

Module Base + 0x00006

	7	6	5	4	3	2	1	0
R W	PCLKAB7	PCLKAB6	PCLKAB5	PCLKAB4	PCLKAB3	PCLKAB2	PCLKAB1	PCLKAB0
Reset	0	0	0	0	0	0	0	0

Figure 19-9. PWM Clock Select Register (PWMCLKAB)

Read: Anytime

Write: Anytime

NOTE

Register bits PCLKAB0 to PCLKAB7 can be written anytime. If a clock select is changed while a PWM signal is being generated, a truncated or stretched pulse can occur during the transition.

Table 19-11. PWMCLK Field Descriptions

Note: Bits related to available channels have functional significance. Writing to unavailable bits has no effect. Read from unavailable bits return a zero

Field	Description
7 PCLKAB7	Pulse Width Channel 7 Clock A/B Select 0 Clock B or SB is the clock source for PWM channel 7, as shown in Table 19-6. 1 Clock A or SA is the clock source for PWM channel 7, as shown in Table 19-6.
6 PCLKAB6	Pulse Width Channel 6 Clock A/B Select 0 Clock B or SB is the clock source for PWM channel 6, as shown in Table 19-6. 1 Clock A or SA is the clock source for PWM channel 6, as shown in Table 19-6.
5 PCLKAB5	Pulse Width Channel 5 Clock A/B Select 0 Clock A or SA is the clock source for PWM channel 5, as shown in Table 19-5. 1 Clock B or SB is the clock source for PWM channel 5, as shown in Table 19-5.
4 PCLKAB4	Pulse Width Channel 4 Clock A/B Select 0 Clock A or SA is the clock source for PWM channel 4, as shown in Table 19-5. 1 Clock B or SB is the clock source for PWM channel 4, as shown in Table 19-5.
3 PCLKAB3	Pulse Width Channel 3 Clock A/B Select 0 Clock B or SB is the clock source for PWM channel 3, as shown in Table 19-6. 1 Clock A or SA is the clock source for PWM channel 3, as shown in Table 19-6.
2 PCLKAB2	Pulse Width Channel 2 Clock A/B Select 0 Clock B or SB is the clock source for PWM channel 2, as shown in Table 19-6. 1 Clock A or SA is the clock source for PWM channel 2, as shown in Table 19-6.
1 PCLKAB1	Pulse Width Channel 1 Clock A/B Select 0 Clock A or SA is the clock source for PWM channel 1, as shown in Table 19-5. 1 Clock B or SB is the clock source for PWM channel 1, as shown in Table 19-5.
0 PCLKAB0	Pulse Width Channel 0 Clock A/B Select 0 Clock A or SA is the clock source for PWM channel 0, as shown in Table 19-5. 1 Clock B or SB is the clock source for PWM channel 0, as shown in Table 19-5.

The clock source of each PWM channel is determined by PCLKx bits in PWMCLK (see Section 19.3.2.3, “PWM Clock Select Register (PWMCLK)) and PCLKABx bits in PWMCLKAB as shown in Table 19-5 and Table 19-6.

19.3.2.8 PWM Scale A Register (PWMSCLA)

PWMSCLA is the programmable scale value used in scaling clock A to generate clock SA. Clock SA is generated by taking clock A, dividing it by the value in the PWMSCLA register and dividing that by two.

Clock SA = Clock A / (2 * PWMSCLA)

NOTE

When PWMSCLA = $00, PWMSCLA value is considered a full scale value of 256. Clock A is thus divided by 512.

Any value written to this register will cause the scale counter to load the new scale value (PWMSCLA).

Module Base + 0x0008

	7	6	5	4	3	2	1	0
R W	Bit 7	6	5	4	3	2	1	Bit 0
Reset	0	0	0	0	0	0	0	0

Figure 19-10. PWM Scale A Register (PWMSCLA)

Read: Anytime

Write: Anytime (causes the scale counter to load the PWMSCLA value)

19.3.2.9 PWM Scale B Register (PWMSCLB)

PWMSCLB is the programmable scale value used in scaling clock B to generate clock SB. Clock SB is generated by taking clock B, dividing it by the value in the PWMSCLB register and dividing that by two.

Clock SB = Clock B / (2 * PWMSCLB)

NOTE

When PWMSCLB = $00, PWMSCLB value is considered a full scale value of 256. Clock B is thus divided by 512.

Any value written to this register will cause the scale counter to load the new scale value (PWMSCLB).

Module Base + 0x0009

	7	6	5	4	3	2	1	0
R W	Bit 7	6	5	4	3	2	1	Bit 0
Reset	0	0	0	0	0	0	0	0

Figure 19-11. PWM Scale B Register (PWMSCLB)

Read: Anytime

Write: Anytime (causes the scale counter to load the PWMSCLB value).

19.3.2.10 PWM Channel Counter Registers (PWMCNTx)

Each channel has a dedicated 8-bit up/down counter which runs at the rate of the selected clock source. The counter can be read at any time without affecting the count or the operation of the PWM channel. In left aligned output mode, the counter counts from 0 to the value in the period register - 1. In center aligned output mode, the counter counts from 0 up to the value in the period register and then back down to 0.

Any value written to the counter causes the counter to reset to $00, the counter direction to be set to up, the immediate load of both duty and period registers with values from the buffers, and the output to change according to the polarity bit. The counter is also cleared at the end of the effective period (see Section 19.4.2.5, “Left Aligned Outputs” and Section 19.4.2.6, “Center Aligned Outputs” for more details). When the channel is disabled (PWMEx = 0), the PWMCNTx register does not count. When a channel becomes enabled (PWMEx = 1), the associated PWM counter starts at the count in the PWMCNTx register. For more detailed information on the operation of the counters, see Section 19.4.2.4, “PWM Timer Counters”.

In concatenated mode, writes to the 16-bit counter by using a 16-bit access or writes to either the low or high order byte of the counter will reset the 16-bit counter. Reads of the 16-bit counter must be made by 16-bit access to maintain data coherency.

NOTE

Writing to the counter while the channel is enabled can cause an irregular PWM cycle to occur.

Module Base + 0x000C = PWMCNT0, 0x000D = PWMCNT1, 0x000E = PWMCNT2, 0x000F = PWMCNT3
Module Base + 0x0010 = PWMCNT4, 0x0011 = PWMCNT5, 0x0012 = PWMCNT6, 0x0013 = PWMCNT7

	7	6	5	4	3	2	1	0
R	Bit 7	6	5	4	3	2	1	Bit 0
W	0	0	0	0	0	0	0	0
Reset	0	0	0	0	0	0	0	0

Figure 19-12. PWM Channel Counter Registers (PWMCNTx)

[1] This register is available only when the corresponding channel exists and is reserved if that channel does not exist. Writes to a reserved register have no functional effect. Reads from a reserved register return zeroes.

Read: Anytime

Write: Anytime (any value written causes PWM counter to be reset to $00).

19.3.2.11 PWM Channel Period Registers (PWMPERx)

There is a dedicated period register for each channel. The value in this register determines the period of the associated PWM channel.

The period registers for each channel are double buffered so that if they change while the channel is enabled, the change will NOT take effect until one of the following occurs:

- The effective period ends

- The counter is written (counter resets to $00)
- The channel is disabled

In this way, the output of the PWM will always be either the old waveform or the new waveform, not some variation in between. If the channel is not enabled, then writes to the period register will go directly to the latches as well as the buffer.

NOTE

Reads of this register return the most recent value written. Reads do not necessarily return the value of the currently active period due to the double buffering scheme.

See Section 19.4.2.3, “PWM Period and Duty” for more information.

To calculate the output period, take the selected clock source period for the channel of interest (A, B, SA, or SB) and multiply it by the value in the period register for that channel:

- Left aligned output (CAEx = 0)

  PWMx Period = Channel Clock Period * PWMPERx
- Center Aligned Output (CAEx = 1)

  PWMx Period = Channel Clock Period * (2 * PWMPERx)

For boundary case programming values, please refer to Section 19.4.2.8, “PWM Boundary Cases”.

Module Base + 0x0014 = PWMPER0, 0x0015 = PWMPER1, 0x0016 = PWMPER2, 0x0017 = PWMPER3
Module Base + 0x0018 = PWMPER4, 0x0019 = PWMPER5, 0x001A = PWMPER6, 0x001B = PWMPER7

	7	6	5	4	3	2	1	0
R W	Bit 7	6	5	4	3	2	1	Bit 0
Reset	1	1	1	1	1	1	1	1

Figure 19-13. PWM Channel Period Registers (PWMPERx)

[1] This register is available only when the corresponding channel exists and is reserved if that channel does not exist. Writes to a reserved register have no functional effect. Reads from a reserved register return zeroes.

Read: Anytime

Write: Anytime

19.3.2.12 PWM Channel Duty Registers (PWMDTYx)

There is a dedicated duty register for each channel. The value in this register determines the duty of the associated PWM channel. The duty value is compared to the counter and if it is equal to the counter value a match occurs and the output changes state.

The duty registers for each channel are double buffered so that if they change while the channel is enabled, the change will NOT take effect until one of the following occurs:

- The effective period ends
- The counter is written (counter resets to $00)

- The channel is disabled

In this way, the output of the PWM will always be either the old duty waveform or the new duty waveform, not some variation in between. If the channel is not enabled, then writes to the duty register will go directly to the latches as well as the buffer.

NOTE

Reads of this register return the most recent value written. Reads do not necessarily return the value of the currently active duty due to the double buffering scheme.

See Section 19.4.2.3, “PWM Period and Duty” for more information.

NOTE

Depending on the polarity bit, the duty registers will contain the count of either the high time or the low time. If the polarity bit is one, the output starts high and then goes low when the duty count is reached, so the duty registers contain a count of the high time. If the polarity bit is zero, the output starts low and then goes high when the duty count is reached, so the duty registers contain a count of the low time.

To calculate the output duty cycle (high time as a% of period) for a particular channel:

- Polarity = 0 (PPOL x =0)

  Duty Cycle = [(PWMPERx-PWMDTYx)/PWMPERx] * 100%
- Polarity = 1 (PPOLx = 1)

  Duty Cycle = [PWMDTYx / PWMPERx] * 100%

For boundary case programming values, please refer to Section 19.4.2.8, “PWM Boundary Cases”.

Module Base + 0x001C = PWMDTY0, 0x001D = PWMDTY1, 0x001E = PWMDTY2, 0x001F = PWMDTY3
Module Base + 0x0020 = PWMDTY4, 0x0021 = PWMDTY5, 0x0022 = PWMDTY6, 0x0023 = PWMDTY7

	7	6	5	4	3	2	1	0
R W	Bit 7	6	5	4	3	2	1	Bit 0
Reset	1	1	1	1	1	1	1	1

Figure 19-14. PWM Channel Duty Registers (PWMDTYx)

[1] This register is available only when the corresponding channel exists and is reserved if that channel does not exist. Writes to a reserved register have no functional effect. Reads from a reserved register return zeroes.

Read: Anytime

Write: Anytime

19.4 Functional Description

19.4.1 PWM Clock Select

There are four available clocks: clock A, clock B, clock SA (scaled A), and clock SB (scaled B). These four clocks are based on the bus clock.

Clock A and B can be software selected to be 1, 1/2, 1/4, 1/8,..., 1/64, 1/128 times the bus clock. Clock SA uses clock A as an input and divides it further with a reloadable counter. Similarly, clock SB uses clock B as an input and divides it further with a reloadable counter. The rates available for clock SA are software selectable to be clock A divided by 2, 4, 6, 8,..., or 512 in increments of divide by 2. Similar rates are available for clock SB. Each PWM channel has the capability of selecting one of four clocks, clock A, Clock B, clock SA or clock SB.

The block diagram in Figure 19-15 shows the four different clocks and how the scaled clocks are created.

19.4.1.1 Prescale

The input clock to the PWM prescaler is the bus clock. It can be disabled whenever the part is in freeze mode by setting the PFRZ bit in the PWMCTL register. If this bit is set, whenever the MCU is in freeze mode (freeze mode signal active) the input clock to the prescaler is disabled. This is useful for emulation in order to freeze the PWM. The input clock can also be disabled when all available PWM channels are disabled (PWMEx-0 = 0). This is useful for reducing power by disabling the prescale counter.

Clock A and clock B are scaled values of the input clock. The value is software selectable for both clock A and clock B and has options of 1, 1/2, 1/4, 1/8, 1/16, 1/32, 1/64, or 1/128 times the bus clock. The value selected for clock A is determined by the PCKA2, PCKA1, PCKA0 bits in the PWMPRCLK register. The value selected for clock B is determined by the PCKB2, PCKB1, PCKB0 bits also in the PWMPRCLK register.

19.4.1.2 Clock Scale

The scaled A clock uses clock A as an input and divides it further with a user programmable value and then divides this by 2. The scaled B clock uses clock B as an input and divides it further with a user programmable value and then divides this by 2. The rates available for clock SA are software selectable to be clock A divided by 2, 4, 6, 8,..., or 512 in increments of divide by 2. Similar rates are available for clock SB.

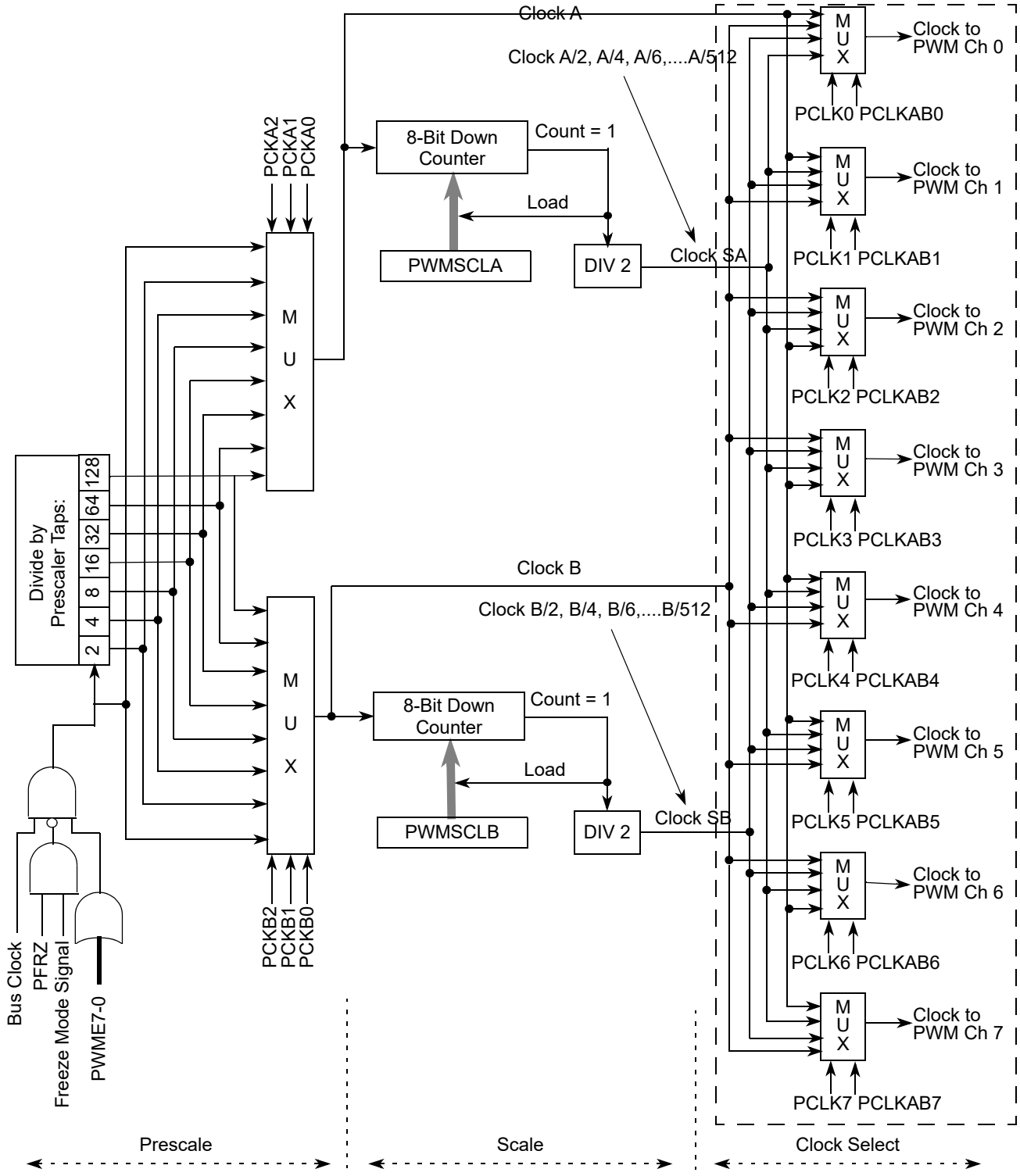

Figure 19-15. PWM Clock Select Block Diagram

Clock A is used as an input to an 8-bit down counter. This down counter loads a user programmable scale value from the scale register (PWMSCLA). When the down counter reaches one, a pulse is output and the 8-bit counter is re-loaded. The output signal from this circuit is further divided by two. This gives a greater range with only a slight reduction in granularity. Clock SA equals clock A divided by two times the value in the PWMSCLA register.

NOTE

Clock SA = Clock A / (2 * PWMSCLA)

When PWMSCLA = $00, PWMSCLA value is considered a full scale value of 256. Clock A is thus divided by 512.

Similarly, clock B is used as an input to an 8-bit down counter followed by a divide by two producing clock SB. Thus, clock SB equals clock B divided by two times the value in the PWMSCLB register.

NOTE

Clock SB = Clock B / (2 * PWMSCLB)

When PWMSCLB = $00, PWMSCLB value is considered a full scale value of 256. Clock B is thus divided by 512.

As an example, consider the case in which the user writes $FF into the PWMSCLA register. Clock A for this case will be E (bus clock) divided by 4. A pulse will occur at a rate of once every 255x4 E cycles. Passing this through the divide by two circuit produces a clock signal at an E divided by 2040 rate. Similarly, a value of $01 in the PWMSCLA register when clock A is E divided by 4 will produce a clock at an E divided by 8 rate.

Writing to PWMSCLA or PWMSCLB causes the associated 8-bit down counter to be re-loaded. Otherwise, when changing rates the counter would have to count down to $01 before counting at the proper rate. Forcing the associated counter to re-load the scale register value every time PWMSCLA or PWMSCLB is written prevents this.

NOTE

Writing to the scale registers while channels are operating can cause irregularities in the PWM outputs.

19.4.1.3 Clock Select

Each PWM channel has the capability of selecting one of four clocks, clock A, clock SA, clock B or clock SB. The clock selection is done with the PCLKx control bits in the PWMCLK register and PCLKABx control bits in PWMCLKAB register. For backward compatibility consideration, the reset value of PWMCLK and PWMCLKAB configures following default clock selection.

For channels 0, 1, 4, and 5 the clock choices are clock A.

For channels 2, 3, 6, and 7 the clock choices are clock B.

NOTE

Changing clock control bits while channels are operating can cause irregularities in the PWM outputs.

19.4.2 PWM Channel Timers

The main part of the PWM module are the actual timers. Each of the timer channels has a counter, a period register and a duty register (each are 8-bit). The waveform output period is controlled by a match between the period register and the value in the counter. The duty is controlled by a match between the duty register and the counter value and causes the state of the output to change during the period. The starting polarity of the output is also selectable on a per channel basis. Shown below in Figure 19-16 is the block diagram for the PWM timer.

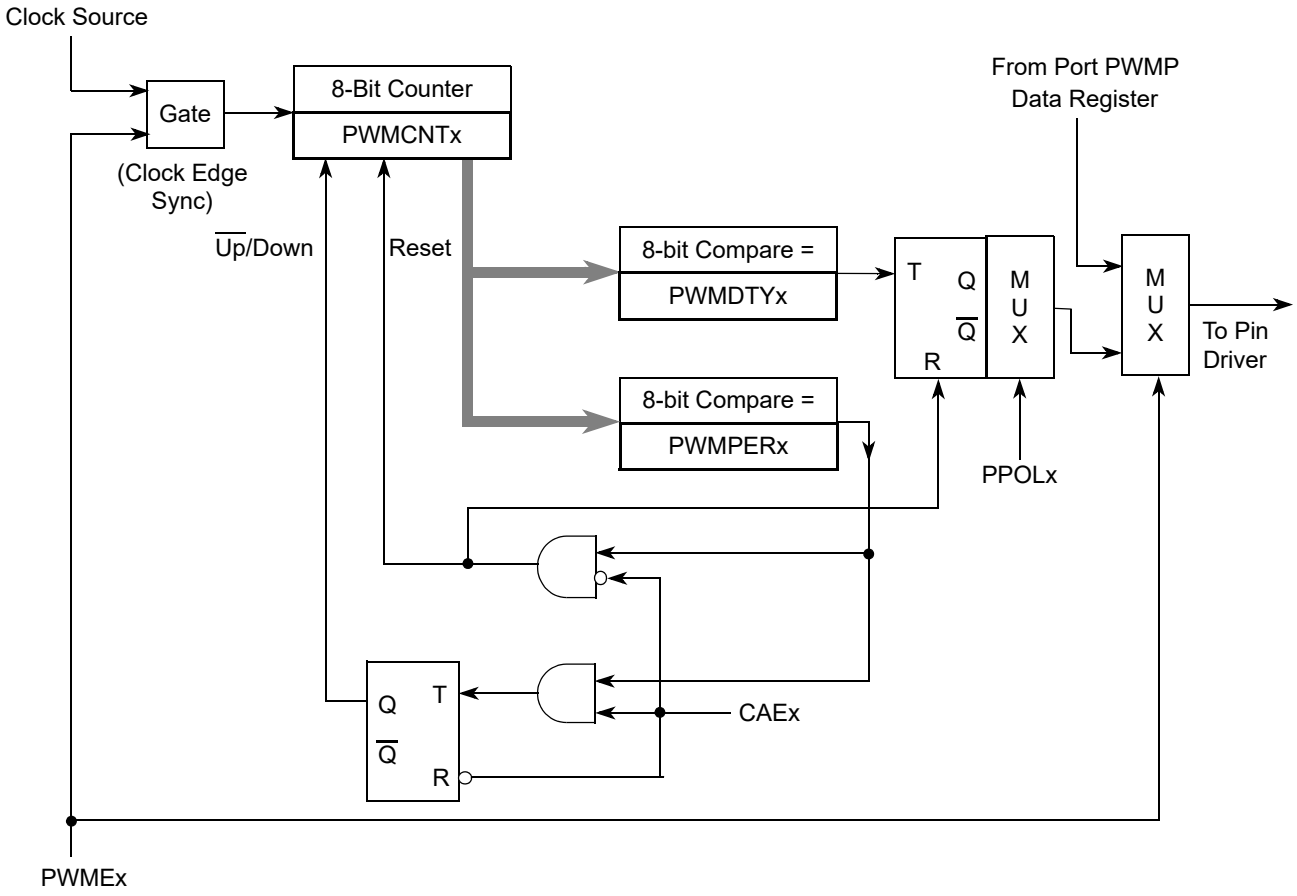

Figure 19-16. PWM Timer Channel Block Diagram

19.4.2.1 PWM Enable

Each PWM channel has an enable bit (PWMEx) to start its waveform output. When any of the PWMEx bits are set (PWMEx = 1), the associated PWM output signal is enabled immediately. However, the actual PWM waveform is not available on the associated PWM output until its clock source begins its next cycle due to the synchronization of PWMEx and the clock source. An exception to this is when channels are concatenated. Refer to Section 19.4.2.7, “PWM 16-Bit Functions” for more detail.

NOTE

The first PWM cycle after enabling the channel can be irregular.

On the front end of the PWM timer, the clock is enabled to the PWM circuit by the PWMEx bit being high. There is an edge-synchronizing circuit to guarantee that the clock will only be enabled or disabled at an edge. When the channel is disabled (PWMEx = 0), the counter for the channel does not count.

19.4.2.2 PWM Polarity

Each channel has a polarity bit to allow starting a waveform cycle with a high or low signal. This is shown on the block diagram Figure 19-16 as a mux select of either the Q output or the $\overline{Q}$ output of the PWM output flip flop. When one of the bits in the PWMPOL register is set, the associated PWM channel output is high at the beginning of the waveform, then goes low when the duty count is reached. Conversely, if the polarity bit is zero, the output starts low and then goes high when the duty count is reached.

19.4.2.3 PWM Period and Duty

Dedicated period and duty registers exist for each channel and are double buffered so that if they change while the channel is enabled, the change will NOT take effect until one of the following occurs:

- The effective period ends
- The counter is written (counter resets to $00)
- The channel is disabled

In this way, the output of the PWM will always be either the old waveform or the new waveform, not some variation in between. If the channel is not enabled, then writes to the period and duty registers will go directly to the latches as well as the buffer.

A change in duty or period can be forced into effect “immediately” by writing the new value to the duty and/or period registers and then writing to the counter. This forces the counter to reset and the new duty and/or period values to be latched. In addition, since the counter is readable, it is possible to know where the count is with respect to the duty value and software can be used to make adjustments

NOTE

When forcing a new period or duty into effect immediately, an irregular PWM cycle can occur.

Depending on the polarity bit, the duty registers will contain the count of either the high time or the low time.

19.4.2.4 PWM Timer Counters

Each channel has a dedicated 8-bit up/down counter which runs at the rate of the selected clock source (see Section 19.4.1, “PWM Clock Select” for the available clock sources and rates). The counter compares to two registers, a duty register and a period register as shown in Figure 19-16. When the PWM counter matches the duty register, the output flip-flop changes state, causing the PWM waveform to also change state. A match between the PWM counter and the period register behaves differently depending on what output mode is selected as shown in Figure 19-16 and described in Section 19.4.2.5, “Left Aligned Outputs” and Section 19.4.2.6, “Center Aligned Outputs”.

Each channel counter can be read at anytime without affecting the count or the operation of the PWM channel.

Any value written to the counter causes the counter to reset to $00, the counter direction to be set to up, the immediate load of both duty and period registers with values from the buffers, and the output to change according to the polarity bit. When the channel is disabled (PWMEx = 0), the counter stops. When a channel becomes enabled (PWMEx = 1), the associated PWM counter continues from the count in the PWMCNTx register. This allows the waveform to continue where it left off when the channel is re-enabled. When the channel is disabled, writing “0” to the period register will cause the counter to reset on the next selected clock.

NOTE

If the user wants to start a new “clean” PWM waveform without any “history” from the old waveform, the user must write to channel counter (PWMCNTx) prior to enabling the PWM channel (PWMEx = 1).

Generally, writes to the counter are done prior to enabling a channel in order to start from a known state. However, writing a counter can also be done while the PWM channel is enabled (counting). The effect is similar to writing the counter when the channel is disabled, except that the new period is started immediately with the output set according to the polarity bit.

NOTE

Writing to the counter while the channel is enabled can cause an irregular PWM cycle to occur.

The counter is cleared at the end of the effective period (see Section 19.4.2.5, “Left Aligned Outputs” and Section 19.4.2.6, “Center Aligned Outputs” for more details).

Table 19-12. PWM Timer Counter Conditions

Counter Clears ($00)	Counter Counts	Counter Stops
When PWMCNTx register written to any value	When PWM channel is enabled (PWMEx = 1). Counts from last value in PWMCNTx.	When PWM channel is disabled (PWMEx = 0)
Effective period ends		

19.4.2.5 Left Aligned Outputs

The PWM timer provides the choice of two types of outputs, left aligned or center aligned. They are selected with the CAEx bits in the PWMCAE register. If the CAEx bit is cleared (CAEx = 0), the corresponding PWM output will be left aligned.

In left aligned output mode, the 8-bit counter is configured as an up counter only. It compares to two registers, a duty register and a period register as shown in the block diagram in Figure 19-16. When the PWM counter matches the duty register the output flip-flop changes state causing the PWM waveform to also change state. A match between the PWM counter and the period register resets the counter and the output flip-flop, as shown in Figure 19-16, as well as performing a load from the double buffer period and duty register to the associated registers, as described in Section 19.4.2.3, “PWM Period and Duty”. The counter counts from 0 to the value in the period register – 1.

NOTE

Changing the PWM output mode from left aligned to center aligned output (or vice versa) while channels are operating can cause irregularities in the PWM output. It is recommended to program the output mode before enabling the PWM channel.

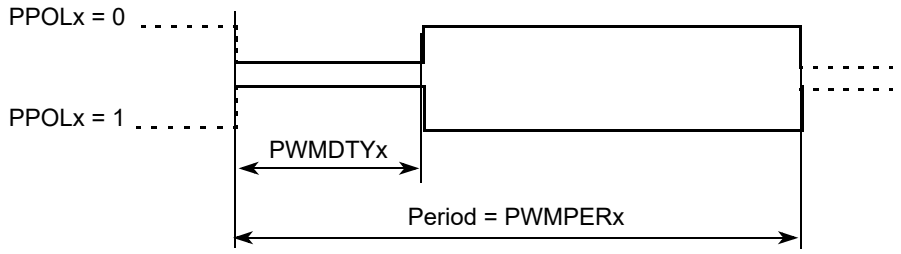

Figure 19-17. PWM Left Aligned Output Waveform

To calculate the output frequency in left aligned output mode for a particular channel, take the selected clock source frequency for the channel (A, B, SA, or SB) and divide it by the value in the period register for that channel.

- PWMx Frequency = Clock (A, B, SA, or SB) / PWMPERx
- PWMx Duty Cycle (high time as a% of period):
  - Polarity = 0 (PPOLx = 0)

    Duty Cycle = [(PWMPERx-PWMDTYx)/PWMPERx] * 100%
  - Polarity = 1 (PPOLx = 1)

    Duty Cycle = [PWMDTYx / PWMPERx] * 100%

As an example of a left aligned output, consider the following case:

Clock Source = E, where E = 10 MHz (100 ns period)

PPOLx = 0

PWMPERx = 4

PWMDTYx = 1

PWMx Frequency = 10 MHz/4 = 2.5 MHz

PWMx Period = 400 ns

PWMx Duty Cycle = 3/4 *100% = 75%

The output waveform generated is shown in Figure 19-18.

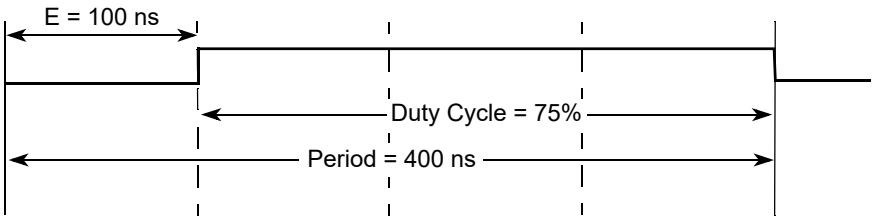

Figure 19-18. PWM Left Aligned Output Example Waveform

19.4.2.6 Center Aligned Outputs

For center aligned output mode selection, set the CAEx bit (CAEx = 1) in the PWMCAE register and the corresponding PWM output will be center aligned.

The 8-bit counter operates as an up/down counter in this mode and is set to up whenever the counter is equal to $00. The counter compares to two registers, a duty register and a period register as shown in the block diagram in Figure 19-16. When the PWM counter matches the duty register, the output flip-flop changes state, causing the PWM waveform to also change state. A match between the PWM counter and the period register changes the counter direction from an up-count to a down-count. When the PWM counter decrements and matches the duty register again, the output flip-flop changes state causing the PWM output to also change state. When the PWM counter decrements and reaches zero, the counter direction changes from a down-count back to an up-count and a load from the double buffer period and duty registers to the associated registers is performed, as described in Section 19.4.2.3, “PWM Period and Duty”. The counter counts from 0 up to the value in the period register and then back down to 0. Thus the effective period is PWMPERx*2.

NOTE

Changing the PWM output mode from left aligned to center aligned output (or vice versa) while channels are operating can cause irregularities in the PWM output. It is recommended to program the output mode before enabling the PWM channel.

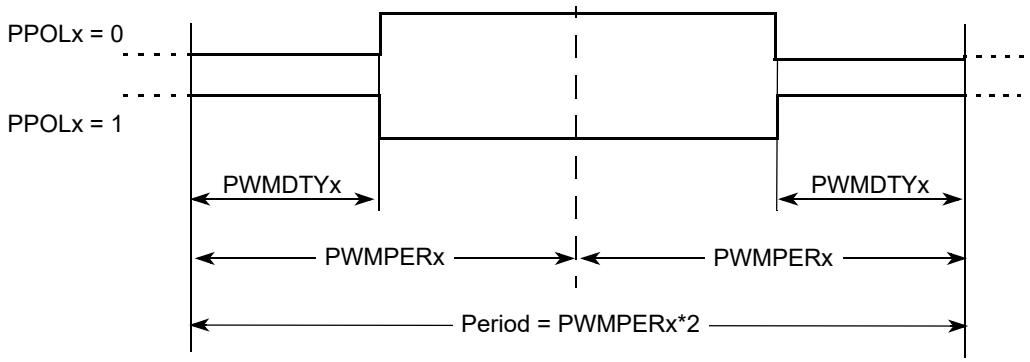

Figure 19-19. PWM Center Aligned Output Waveform

To calculate the output frequency in center aligned output mode for a particular channel, take the selected clock source frequency for the channel (A, B, SA, or SB) and divide it by twice the value in the period register for that channel.

- PWMx Frequency = Clock (A, B, SA, or SB) / (2*PWMPERx)
- PWMx Duty Cycle (high time as a% of period):
  - Polarity = 0 (PPOLx = 0)
    Duty Cycle = [(PWMPERx-PWMDTYx)/PWMPERx] * 100%
  - Polarity = 1 (PPOLx = 1)
    Duty Cycle = [PWMDTYx / PWMPERx] * 100%

As an example of a center aligned output, consider the following case:

Clock Source = E, where E = 10 MHz (100 ns period)

PPOLx = 0

PWMPERx = 4

PWMDTYx = 1

PWMx Frequency = 10 MHz/8 = 1.25 MHz

PWMx Period = 800 ns

PWMx Duty Cycle = 3/4 *100% = 75%

Shown in Figure 19-20 is the output waveform generated.

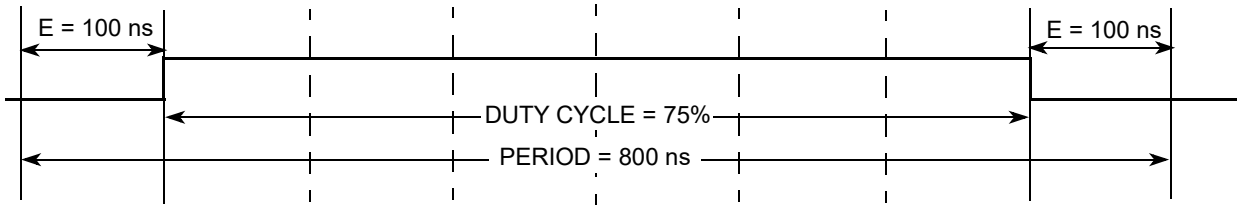

Figure 19-20. PWM Center Aligned Output Example Waveform

19.4.2.7 PWM 16-Bit Functions

The scalable PWM timer also has the option of generating up to 8-channels of 8-bits or 4-channels of 16-bits for greater PWM resolution. This 16-bit channel option is achieved through the concatenation of two 8-bit channels.

The PWMCTL register contains four control bits, each of which is used to concatenate a pair of PWM channels into one 16-bit channel. Channels 6 and 7 are concatenated with the CON67 bit, channels 4 and 5 are concatenated with the CON45 bit, channels 2 and 3 are concatenated with the CON23 bit, and channels 0 and 1 are concatenated with the CON01 bit.

NOTE

Change these bits only when both corresponding channels are disabled.

When channels 6 and 7 are concatenated, channel 6 registers become the high order bytes of the double byte channel, as shown in Figure 19-21. Similarly, when channels 4 and 5 are concatenated, channel 4 registers become the high order bytes of the double byte channel. When channels 2 and 3 are concatenated, channel 2 registers become the high order bytes of the double byte channel. When channels 0 and 1 are concatenated, channel 0 registers become the high order bytes of the double byte channel.

When using the 16-bit concatenated mode, the clock source is determined by the low order 8-bit channel clock select control bits. That is channel 7 when channels 6 and 7 are concatenated, channel 5 when channels 4 and 5 are concatenated, channel 3 when channels 2 and 3 are concatenated, and channel 1 when channels 0 and 1 are concatenated. The resulting PWM is output to the pins of the corresponding low order 8-bit channel as also shown in Figure 19-21. The polarity of the resulting PWM output is controlled by the PPOLx bit of the corresponding low order 8-bit channel as well.

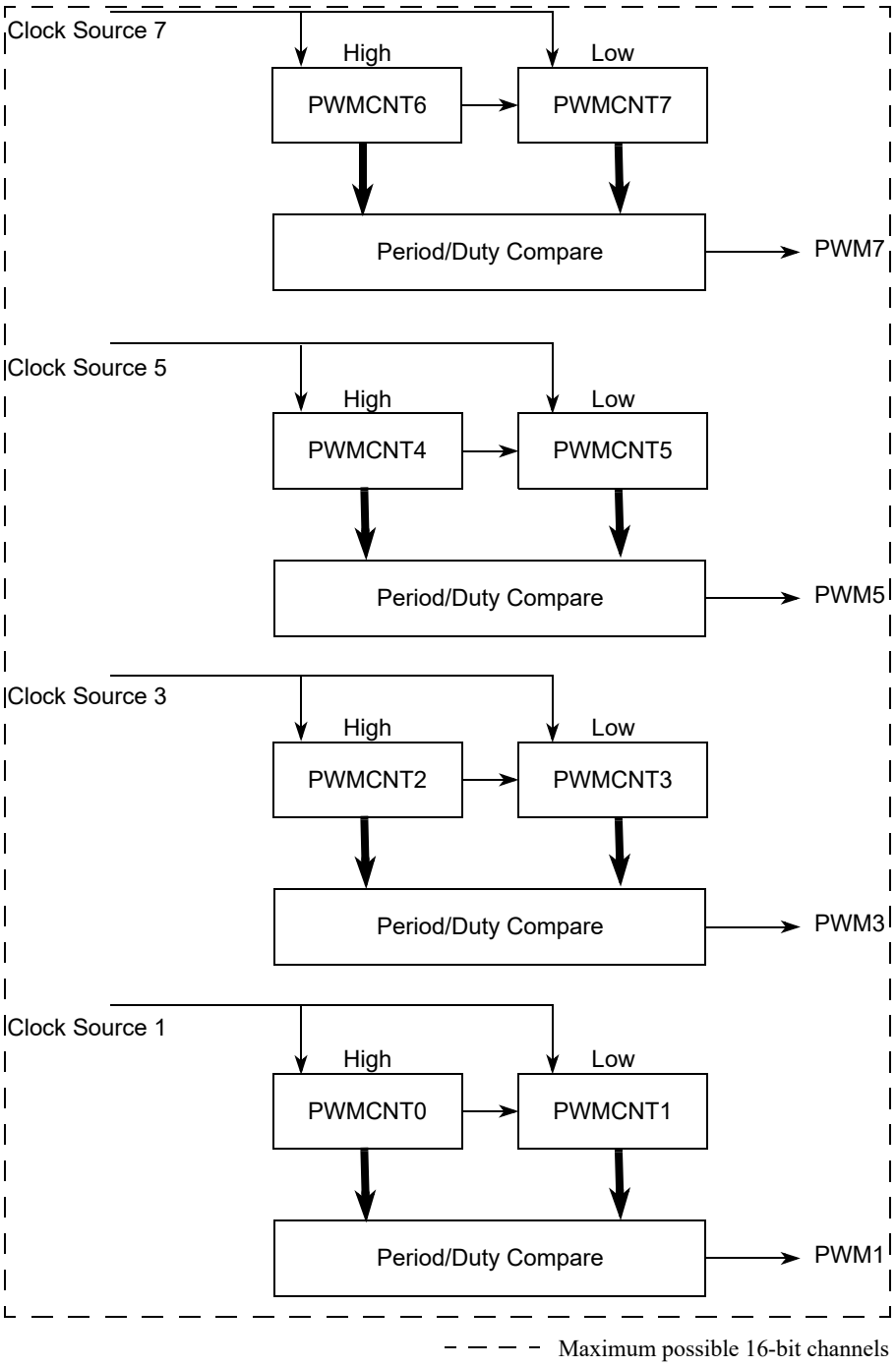

Figure 19-21. PWM 16-Bit Mode

Once concatenated mode is enabled (CONxx bits set in PWMCTL register), enabling/disabling the corresponding 16-bit PWM channel is controlled by the low order PWMEx bit. In this case, the high order bytes PWMEx bits have no effect and their corresponding PWM output is disabled.

In concatenated mode, writes to the 16-bit counter by using a 16-bit access or writes to either the low or high order byte of the counter will reset the 16-bit counter. Reads of the 16-bit counter must be made by 16-bit access to maintain data coherency.

Either left aligned or center aligned output mode can be used in concatenated mode and is controlled by the low order CAEx bit. The high order CAEx bit has no effect.

Table 19-13 is used to summarize which channels are used to set the various control bits when in 16-bit mode.

Table 19-13. 16-bit Concatenation Mode Summary

Note: Bits related to available channels have functional significance.

CONxx	PWMEx	PPOLx	PCLKx	CAEx	PWMx Output
CON67	PWME7	PPOL7	PCLK7	CAE7	PWM7
CON45	PWME5	PPOL5	PCLK5	CAE5	PWM5
CON23	PWME3	PPOL3	PCLK3	CAE3	PWM3
CON01	PWME1	PPOL1	PCLK1	CAE1	PWM1

19.4.2.8 PWM Boundary Cases

Table 19-14 summarizes the boundary conditions for the PWM regardless of the output mode (left aligned or center aligned) and 8-bit (normal) or 16-bit (concatenation).

Table 19-14. PWM Boundary Cases

PWMDTYx	PWMPERx	PPOLx	PWMx Output
$00 (indicates no duty)	>$00	1	Always low
$00 (indicates no duty)	>$00	0	Always high
XX	$00[1] (indicates no period)	1	Always high
XX	$00[1] (indicates no period)	0	Always low
>= PWMPERx	XX	1	Always high
>= PWMPERx	XX	0	Always low

[1] Counter = $00 and does not count.

19.5 Resets

The reset state of each individual bit is listed within the Section 19.3.2, “Register Descriptions” which details the registers and their bit-fields. All special functions or modes which are initialized during or just following reset are described within this section.

- The 8-bit up/down counter is configured as an up counter out of reset.
- All the channels are disabled and all the counters do not count.

- For channels 0, 1, 4, and 5 the clock choices are clock A.
- For channels 2, 3, 6, and 7 the clock choices are clock B.

19.6 Interrupts

The PWM module has no interrupt.

Chapter 20
Serial Communication Interface (S12SCIV5)

Table 20-1. Revision History

Version Number	Revision Date	Effective Date	Author	Description of Changes
05.03	12/25/2008			remove redundancy comments in Figure1-2
05.04	08/05/2009			fix typo, SCIBDL reset value be 0x04, not 0x00
05.05	06/03/2010			fix typo, Table 20-4,SCICR1 Even parity should be PT=0 fix typo, on page 20-674,should be BKDIF,not BLDIF

20.1 Introduction

This block guide provides an overview of the serial communication interface (SCI) module.

The SCI allows asynchronous serial communications with peripheral devices and other CPUs.

20.1.1 Glossary

IR: InfraRed

IrDA: Infrared Design Associate

IRQ: Interrupt Request

LIN: Local Interconnect Network

LSB: Least Significant Bit

MSB: Most Significant Bit

NRZ: Non-Return-to-Zero

RZI: Return-to-Zero-Inverted

RXD: Receive Pin

SCI : Serial Communication Interface

TXD: Transmit Pin

20.1.2 Features

The SCI includes these distinctive features:

- Full-duplex or single-wire operation
- Standard mark/space non-return-to-zero (NRZ) format
- Selectable IrDA 1.4 return-to-zero-inverted (RZI) format with programmable pulse widths
- 13-bit baud rate selection
- Programmable 8-bit or 9-bit data format
- Separately enabled transmitter and receiver
- Programmable polarity for transmitter and receiver
- Programmable transmitter output parity
- Two receiver wakeup methods:
  - Idle line wakeup
  - Address mark wakeup
- Interrupt-driven operation with eight flags:
  - Transmitter empty
  - Transmission complete
  - Receiver full
  - Idle receiver input
  - Receiver overrun
  - Noise error
  - Framing error
  - Parity error
  - Receive wakeup on active edge
  - Transmit collision detect supporting LIN
  - Break Detect supporting LIN
- Receiver framing error detection
- Hardware parity checking
- 1/16 bit-time noise detection

20.1.3 Modes of Operation

The SCI functions the same in normal, special, and emulation modes. It has two low power modes, wait and stop modes.

- Run mode
- Wait mode
- Stop mode

20.1.4 Block Diagram

Figure 20-1 is a high level block diagram of the SCI module, showing the interaction of various function blocks.

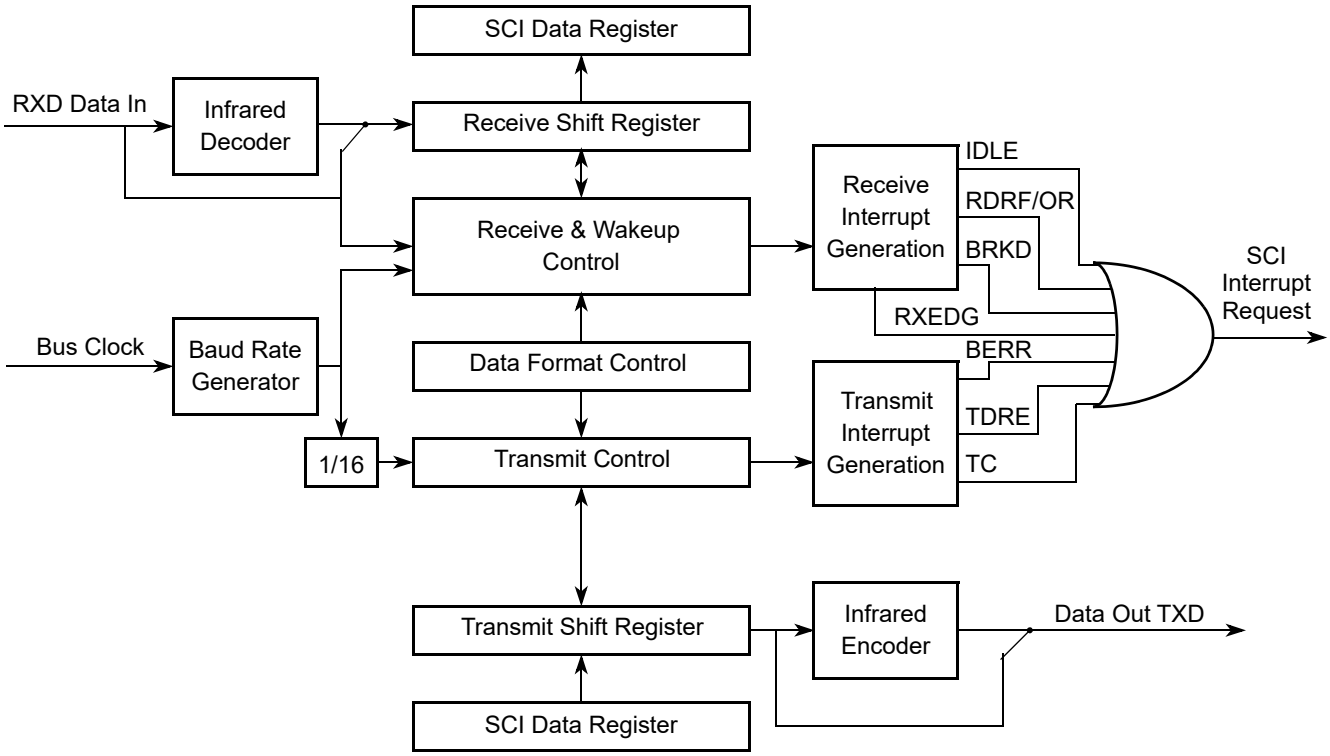

Figure 20-1. SCI Block Diagram

20.2 External Signal Description

The SCI module has a total of two external pins.

20.2.1 TXD — Transmit Pin

The TXD pin transmits SCI (standard or infrared) data. It will idle high in either mode and is high impedance anytime the transmitter is disabled.

20.2.2 RXD — Receive Pin

The RXD pin receives SCI (standard or infrared) data. An idle line is detected as a line high. This input is ignored when the receiver is disabled and should be terminated to a known voltage.

20.3 Memory Map and Register Definition

This section provides a detailed description of all the SCI registers.

20.3.1 Module Memory Map and Register Definition

The memory map for the SCI module is given below in Figure 20-2. The address listed for each register is the address offset. The total address for each register is the sum of the base address for the SCI module and the address offset for each register.

20.3.2 Register Descriptions

This section consists of register descriptions in address order. Each description includes a standard register diagram with an associated figure number. Writes to a reserved register locations do not have any effect and reads of these locations return a zero. Details of register bit and field function follow the register diagrams, in bit order.

Register Name		Bit 7	6	5	4	3	2	1	Bit 0
0x0000 SCIBDH[1]	R	IREN	TNP1	TNP0	SBR12	SBR11	SBR10	SBR9	SBR8
	W								
0x0001 SCIBDL[1]	R	SBR7	SBR6	SBR5	SBR4	SBR3	SBR2	SBR1	SBR0
	W								
0x0002 SCICR1[1]	R	LOOPS	SCISWAI	RSRC	M	WAKE	ILT	PE	PT
	W								
0x0000 SCIASR1[2]	R	RXEDGIF	0	0	0	0	BERRV	BERRIF	BKDIF
	W								
0x0001 SCIACR1[2]	R	RXEDGIE	0	0	0	0	0	BERRIE	BKDIE
	W								
0x0002 SCIACR2[2]	R	0	0	0	0	0	BERRM1	BERRM0	BKDFE
	W								
0x0003 SCICR2	R	TIE	TCIE	RIE	ILIE	TE	RE	RWU	SBK
	W								
0x0004 SCISR1	R	TDRE	TC	RDRF	IDLE	OR	NF	FE	PF
	W								
0x0005 SCISR2	R	AMAP	0	0	TXPOL	RXPOL	BRK13	TXDIR	RAF
	W								

= Unimplemented or Reserved

Figure 20-2. SCI Register Summary (Sheet 1 of 2)

Register Name		Bit 7	6	5	4	3	2	1	Bit 0
0x0006 SCIDRH	R	R8	T8	0	0	0	0	0	0
	W								
0x0007 SCIDRL	R	R7	R6	R5	R4	R3	R2	R1	R0
	W	T7	T6	T5	T4	T3	T2	T1	T0

1.These registers are accessible if the AMAP bit in the SCISR2 register is set to zero.

2,These registers are accessible if the AMAP bit in the SCISR2 register is set to one.

= Unimplemented or Reserved

Figure 20-2. SCI Register Summary (Sheet 2 of 2)

20.3.2.1 SCI Baud Rate Registers (SCIBDH, SCIBDL)

Module Base + 0x0000

	7	6	5	4	3	2	1	0
R W	IREN	TNP1	TNP0	SBR12	SBR11	SBR10	SBR9	SBR8
Reset	0	0	0	0	0	0	0	0

Figure 20-3. SCI Baud Rate Register (SCIBDH)

Module Base + 0x0001

	7	6	5	4	3	2	1	0
R W	SBR7	SBR6	SBR5	SBR4	SBR3	SBR2	SBR1	SBR0
Reset	0	0	0	0	0	1	0	0

Figure 20-4. SCI Baud Rate Register (SCIBDL)

Read: Anytime, if AMAP = 0. If only SCIBDH is written to, a read will not return the correct data until SCIBDL is written to as well, following a write to SCIBDH.

Write: Anytime, if AMAP = 0.

NOTE

Those two registers are only visible in the memory map if AMAP = 0 (reset condition).

The SCI baud rate register is used by to determine the baud rate of the SCI, and to control the infrared modulation/demodulation submodule.

Table 20-2. SCIBDH and SCIBDL Field Descriptions

Field	Description
7 IREN	**Infrared Enable Bit** — This bit enables/disables the infrared modulation/demodulation submodule. 0 IR disabled 1 IR enabled
6:5 TNP[1:0]	**Transmitter Narrow Pulse Bits** — These bits enable whether the SCI transmits a 1/16, 3/16, 1/32 or 1/4 narrow pulse. See Table 20-3.
4:0 7:0 SBR[12:0]	**SCI Baud Rate Bits** — The baud rate for the SCI is determined by the bits in this register. The baud rate is calculated two different ways depending on the state of the IREN bit. The formulas for calculating the baud rate are: When IREN = 0 then, SCI baud rate = SCI bus clock / (16 x SBR[12:0]) When IREN = 1 then, SCI baud rate = SCI bus clock / (32 x SBR[12:1]) **Note:** The baud rate generator is disabled after reset and not started until the TE bit or the RE bit is set for the first time. The baud rate generator is disabled when (SBR[12:0] = 0 and IREN = 0) or (SBR[12:1] = 0 and IREN = 1). **Note:** Writing to SCIBDH has no effect without writing to SCIBDL, because writing to SCIBDH puts the data in a temporary location until SCIBDL is written to.

Table 20-3. IRSCI Transmit Pulse Width

TNP[1:0]	Narrow Pulse Width
11	1/4
10	1/32
01	1/16
00	3/16

20.3.2.2 SCI Control Register 1 (SCICR1)

Module Base + 0x0002

	7	6	5	4	3	2	1	0
R W	LOOPS	SCISWAI	RSRC	M	WAKE	ILT	PE	PT
Reset	0	0	0	0	0	0	0	0

Figure 20-5. SCI Control Register 1 (SCICR1)

Read: Anytime, if AMAP = 0.

Write: Anytime, if AMAP = 0.

NOTE

This register is only visible in the memory map if AMAP = 0 (reset condition).

Table 20-4. SCICR1 Field Descriptions

Field	Description
7 LOOPS	**Loop Select Bit** — LOOPS enables loop operation. In loop operation, the RXD pin is disconnected from the SCI and the transmitter output is internally connected to the receiver input. Both the transmitter and the receiver must be enabled to use the loop function. 0 Normal operation enabled 1 Loop operation enabled The receiver input is determined by the RSRC bit.
6 SCISWAI	**SCI Stop in Wait Mode Bit** — SCISWAI disables the SCI in wait mode. 0 SCI enabled in wait mode 1 SCI disabled in wait mode
5 RSRC	**Receiver Source Bit** — When LOOPS = 1, the RSRC bit determines the source for the receiver shift register input. See Table 20-5. 0 Receiver input internally connected to transmitter output 1 Receiver input connected externally to transmitter
4 M	**Data Format Mode Bit** — MODE determines whether data characters are eight or nine bits long. 0 One start bit, eight data bits, one stop bit 1 One start bit, nine data bits, one stop bit
3 WAKE	**Wakeup Condition Bit** — WAKE determines which condition wakes up the SCI: a logic 1 (address mark) in the most significant bit position of a received data character or an idle condition on the RXD pin. 0 Idle line wakeup 1 Address mark wakeup
2 ILT	**Idle Line Type Bit** — ILT determines when the receiver starts counting logic 1s as idle character bits. The counting begins either after the start bit or after the stop bit. If the count begins after the start bit, then a string of logic 1s preceding the stop bit may cause false recognition of an idle character. Beginning the count after the stop bit avoids false idle character recognition, but requires properly synchronized transmissions. 0 Idle character bit count begins after start bit 1 Idle character bit count begins after stop bit
1 PE	**Parity Enable Bit** — PE enables the parity function. When enabled, the parity function inserts a parity bit in the most significant bit position. 0 Parity function disabled 1 Parity function enabled
0 PT	**Parity Type Bit** — PT determines whether the SCI generates and checks for even parity or odd parity. With even parity, an even number of 1s clears the parity bit and an odd number of 1s sets the parity bit. With odd parity, an odd number of 1s clears the parity bit and an even number of 1s sets the parity bit. 0 Even parity 1 Odd parity

Table 20-5. Loop Functions

LOOPS	RSRC	Function
0	x	Normal operation
1	0	Loop mode with transmitter output internally connected to receiver input
1	1	Single-wire mode with TXD pin connected to receiver input

20.3.2.3 SCI Alternative Status Register 1 (SCIASR1)

Module Base + 0x0000

	7	6	5	4	3	2	1	0
R	RXEDGIF	0	0	0	0	BERRV	BERRIF	BKDIF
W								
Reset	0	0	0	0	0	0	0	0

= Unimplemented or Reserved

Figure 20-6. SCI Alternative Status Register 1 (SCIASR1)

Read: Anytime, if AMAP = 1

Write: Anytime, if AMAP = 1

Table 20-6. SCIASR1 Field Descriptions

Field	Description
7 RXEDGIF	**Receive Input Active Edge Interrupt Flag** — RXEDGIF is asserted, if an active edge (falling if RXPOL = 0, rising if RXPOL = 1) on the RXD input occurs. RXEDGIF bit is cleared by writing a “1” to it. 0 No active receive on the receive input has occurred 1 An active edge on the receive input has occurred
2 BERRV	**Bit Error Value** — BERRV reflects the state of the RXD input when the bit error detect circuitry is enabled and a mismatch to the expected value happened. The value is only meaningful, if BERRIF = 1. 0 A low input was sampled, when a high was expected 1 A high input reassembled, when a low was expected
1 BERRIF	**Bit Error Interrupt Flag** — BERRIF is asserted, when the bit error detect circuitry is enabled and if the value sampled at the RXD input does not match the transmitted value. If the BERRIE interrupt enable bit is set an interrupt will be generated. The BERRIF bit is cleared by writing a “1” to it. 0 No mismatch detected 1 A mismatch has occurred
0 BKDIF	**Break Detect Interrupt Flag** — BKDIF is asserted, if the break detect circuitry is enabled and a break signal is received. If the BKDIE interrupt enable bit is set an interrupt will be generated. The BKDIF bit is cleared by writing a “1” to it. 0 No break signal was received 1 A break signal was received

20.3.2.4 SCI Alternative Control Register 1 (SCIACR1)

Module Base + 0x0001

	7	6	5	4	3	2	1	0
R	RXEDGIE	0	0	0	0	0	BERRIE	BKDIE
W								
Reset	0	0	0	0	0	0	0	0

= Unimplemented or Reserved

Figure 20-7. SCI Alternative Control Register 1 (SCIACR1)

Read: Anytime, if AMAP = 1

Write: Anytime, if AMAP = 1

Table 20-7. SCIACR1 Field Descriptions

Field	Description
7 RSEDGIE	**Receive Input Active Edge Interrupt Enable** — RXEDGIE enables the receive input active edge interrupt flag, RXEDGIF, to generate interrupt requests. 0 RXEDGIF interrupt requests disabled 1 RXEDGIF interrupt requests enabled
1 BERRIE	**Bit Error Interrupt Enable** — BERRIE enables the bit error interrupt flag, BERRIF, to generate interrupt requests. 0 BERRIF interrupt requests disabled 1 BERRIF interrupt requests enabled
0 BKDIE	**Break Detect Interrupt Enable** — BKDIE enables the break detect interrupt flag, BKDIF, to generate interrupt requests. 0 BKDIF interrupt requests disabled 1 BKDIF interrupt requests enabled

20.3.2.5 SCI Alternative Control Register 2 (SCIACR2)

Module Base + 0x0002

	7	6	5	4	3	2	1	0
R	0	0	0	0	0	BERRM1	BERRM0	BKDFE
W								
Reset	0	0	0	0	0	0	0	0

= Unimplemented or Reserved

Figure 20-8. SCI Alternative Control Register 2 (SCIACR2)

Read: Anytime, if AMAP = 1

Write: Anytime, if AMAP = 1

Table 20-8. SCIACR2 Field Descriptions

Field	Description
2:1 BERRM[1:0]	**Bit Error Mode** — Those two bits determines the functionality of the bit error detect feature. See Table 20-9.
0 BKDFE	**Break Detect Feature Enable** — BKDFE enables the break detect circuitry. 0 Break detect circuit disabled 1 Break detect circuit enabled

Table 20-9. Bit Error Mode Coding

BERRM1	BERRM0	Function
0	0	Bit error detect circuit is disabled
0	1	Receive input sampling occurs during the 9th time tick of a transmitted bit (refer to Figure 20-19)
1	0	Receive input sampling occurs during the 13th time tick of a transmitted bit (refer to Figure 20-19)

Table 20-9. Bit Error Mode Coding

BERRM1	BERRM0	Function
1	1	Reserved

20.3.2.6 SCI Control Register 2 (SCICR2)

Module Base + 0x0003

	7	6	5	4	3	2	1	0
R W	TIE	TCIE	RIE	ILIE	TE	RE	RWU	SBK
Reset	0	0	0	0	0	0	0	0

Figure 20-9. SCI Control Register 2 (SCICR2)

Read: Anytime

Write: Anytime

Table 20-10. SCICR2 Field Descriptions

Field	Description
7 TIE	**Transmitter Interrupt Enable Bit** — TIE enables the transmit data register empty flag, TDRE, to generate interrupt requests. 0 TDRE interrupt requests disabled 1 TDRE interrupt requests enabled
6 TCIE	**Transmission Complete Interrupt Enable Bit** — TCIE enables the transmission complete flag, TC, to generate interrupt requests. 0 TC interrupt requests disabled 1 TC interrupt requests enabled
5 RIE	**Receiver Full Interrupt Enable Bit** — RIE enables the receive data register full flag, RDRF, or the overrun flag, OR, to generate interrupt requests. 0 RDRF and OR interrupt requests disabled 1 RDRF and OR interrupt requests enabled
4 ILIE	**Idle Line Interrupt Enable Bit** — ILIE enables the idle line flag, IDLE, to generate interrupt requests. 0 IDLE interrupt requests disabled 1 IDLE interrupt requests enabled
3 TE	**Transmitter Enable Bit** — TE enables the SCI transmitter and configures the TXD pin as being controlled by the SCI. The TE bit can be used to queue an idle preamble. 0 Transmitter disabled 1 Transmitter enabled
2 RE	**Receiver Enable Bit** — RE enables the SCI receiver. 0 Receiver disabled 1 Receiver enabled

Table 20-10. SCICR2 Field Descriptions (continued)

Field	Description
1 RWU	**Receiver Wakeup Bit** — Standby state 0 Normal operation. 1 RWU enables the wakeup function and inhibits further receiver interrupt requests. Normally, hardware wakes the receiver by automatically clearing RWU.
0 SBK	**Send Break Bit** — Toggling SBK sends one break character (10 or 11 logic 0s, respectively 13 or 14 logics 0s if BRK13 is set). Toggling implies clearing the SBK bit before the break character has finished transmitting. As long as SBK is set, the transmitter continues to send complete break characters (10 or 11 bits, respectively 13 or 14 bits). 0 No break characters 1 Transmit break characters

20.3.2.7 SCI Status Register 1 (SCISR1)

The SCISR1 and SCISR2 registers provides inputs to the MCU for generation of SCI interrupts. Also, these registers can be polled by the MCU to check the status of these bits. The flag-clearing procedures require that the status register be read followed by a read or write to the SCI data register.It is permissible to execute other instructions between the two steps as long as it does not compromise the handling of I/O, but the order of operations is important for flag clearing.

Module Base + 0x0004

	7	6	5	4	3	2	1	0
R	TDRE	TC	RDRF	IDLE	OR	NF	FE	PF
W								
Reset	1	1	0	0	0	0	0	0

= Unimplemented or Reserved

Figure 20-10. SCI Status Register 1 (SCISR1)

Read: Anytime

Write: Has no meaning or effect

Table 20-11. SCISR1 Field Descriptions

Field	Description
7 TDRE	**Transmit Data Register Empty Flag** — TDRE is set when the transmit shift register receives a byte from the SCI data register. When TDRE is 1, the transmit data register (SCIDRH/L) is empty and can receive a new value to transmit.Clear TDRE by reading SCI status register 1 (SCISR1), with TDRE set and then writing to SCI data register low (SCIDRL). 0 No byte transferred to transmit shift register 1 Byte transferred to transmit shift register; transmit data register empty
6 TC	**Transmit Complete Flag** — TC is set low when there is a transmission in progress or when a preamble or break character is loaded. TC is set high when the TDRE flag is set and no data, preamble, or break character is being transmitted.When TC is set, the TXD pin becomes idle (logic 1). Clear TC by reading SCI status register 1 (SCISR1) with TC set and then writing to SCI data register low (SCIDRL). TC is cleared automatically when data, preamble, or break is queued and ready to be sent. TC is cleared in the event of a simultaneous set and clear of the TC flag (transmission not complete). 0 Transmission in progress 1 No transmission in progress
5 RDRF	**Receive Data Register Full Flag** — RDRF is set when the data in the receive shift register transfers to the SCI data register. Clear RDRF by reading SCI status register 1 (SCISR1) with RDRF set and then reading SCI data register low (SCIDRL). 0 Data not available in SCI data register 1 Received data available in SCI data register
4 IDLE	**Idle Line Flag** — IDLE is set when 10 consecutive logic 1s (if M = 0) or 11 consecutive logic 1s (if M =1) appear on the receiver input. Once the IDLE flag is cleared, a valid frame must again set the RDRF flag before an idle condition can set the IDLE flag.Clear IDLE by reading SCI status register 1 (SCISR1) with IDLE set and then reading SCI data register low (SCIDRL). 0 Receiver input is either active now or has never become active since the IDLE flag was last cleared 1 Receiver input has become idle **Note:** When the receiver wakeup bit (RWU) is set, an idle line condition does not set the IDLE flag.
3 OR	**Overrun Flag** — OR is set when software fails to read the SCI data register before the receive shift register receives the next frame. The OR bit is set immediately after the stop bit has been completely received for the second frame. The data in the shift register is lost, but the data already in the SCI data registers is not affected. Clear OR by reading SCI status register 1 (SCISR1) with OR set and then reading SCI data register low (SCIDRL). 0 No overrun 1 Overrun **Note:** OR flag may read back as set when RDRF flag is clear. This may happen if the following sequence of events occurs: 1. After the first frame is received, read status register SCISR1 (returns RDRF set and OR flag clear); 2. Receive second frame without reading the first frame in the data register (the second frame is not received and OR flag is set); 3. Read data register SCIDRL (returns first frame and clears RDRF flag in the status register); 4. Read status register SCISR1 (returns RDRF clear and OR set). Event 3 may be at exactly the same time as event 2 or any time after. When this happens, a dummy SCIDRL read following event 4 will be required to clear the OR flag if further frames are to be received.
2 NF	**Noise Flag** — NF is set when the SCI detects noise on the receiver input. NF bit is set during the same cycle as the RDRF flag but does not get set in the case of an overrun. Clear NF by reading SCI status register 1(SCISR1), and then reading SCI data register low (SCIDRL). 0 No noise 1 Noise

Table 20-11. SCISR1 Field Descriptions (continued)

Field	Description
1 FE	**Framing Error Flag** — FE is set when a logic 0 is accepted as the stop bit. FE bit is set during the same cycle as the RDRF flag but does not get set in the case of an overrun. FE inhibits further data reception until it is cleared. Clear FE by reading SCI status register 1 (SCISR1) with FE set and then reading the SCI data register low (SCIDRL). 0 No framing error 1 Framing error
0 PF	**Parity Error Flag** — PF is set when the parity enable bit (PE) is set and the parity of the received data does not match the parity type bit (PT). PF bit is set during the same cycle as the RDRF flag but does not get set in the case of an overrun. Clear PF by reading SCI status register 1 (SCISR1), and then reading SCI data register low (SCIDRL). 0 No parity error 1 Parity error

20.3.2.8 SCI Status Register 2 (SCISR2)

Module Base + 0x0005

	7	6	5	4	3	2	1	0
R	AMAP	0	0	TXPOL	RXPOL	BRK13	TXDIR	RAF
W								
Reset	0	0	0	0	0	0	0	0

= Unimplemented or Reserved

Figure 20-11. SCI Status Register 2 (SCISR2)

Read: Anytime

Write: Anytime

Table 20-12. SCISR2 Field Descriptions

Field	Description
7 AMAP	**Alternative Map** — This bit controls which registers sharing the same address space are accessible. In the reset condition the SCI behaves as previous versions. Setting AMAP=1 allows the access to another set of control and status registers and hides the baud rate and SCI control Register 1. 0 The registers labelled SCIBDH (0x0000),SCIBDL (0x0001), SCICR1 (0x0002) are accessible 1 The registers labelled SCIASR1 (0x0000),SCIACR1 (0x0001), SCIACR2 (0x00002) are accessible
4 TXPOL	**Transmit Polarity** — This bit control the polarity of the transmitted data. In NRZ format, a one is represented by a mark and a zero is represented by a space for normal polarity, and the opposite for inverted polarity. In IrDA format, a zero is represented by short high pulse in the middle of a bit time remaining idle low for a one for normal polarity, and a zero is represented by short low pulse in the middle of a bit time remaining idle high for a one for inverted polarity. 0 Normal polarity 1 Inverted polarity

Table 20-12. SCISR2 Field Descriptions (continued)

Field	Description
3 RXPOL	**Receive Polarity** — This bit control the polarity of the received data. In NRZ format, a one is represented by a mark and a zero is represented by a space for normal polarity, and the opposite for inverted polarity. In IrDA format, a zero is represented by short high pulse in the middle of a bit time remaining idle low for a one for normal polarity, and a zero is represented by short low pulse in the middle of a bit time remaining idle high for a one for inverted polarity. 0 Normal polarity 1 Inverted polarity
2 BRK13	**Break Transmit Character Length** — This bit determines whether the transmit break character is 10 or 11 bit respectively 13 or 14 bits long. The detection of a framing error is not affected by this bit. 0 Break character is 10 or 11 bit long 1 Break character is 13 or 14 bit long
1 TXDIR	**Transmitter Pin Data Direction in Single-Wire Mode** — This bit determines whether the TXD pin is going to be used as an input or output, in the single-wire mode of operation. This bit is only relevant in the single-wire mode of operation. 0 TXD pin to be used as an input in single-wire mode 1 TXD pin to be used as an output in single-wire mode
0 RAF	**Receiver Active Flag** — RAF is set when the receiver detects a logic 0 during the RT1 time period of the start bit search. RAF is cleared when the receiver detects an idle character. 0 No reception in progress 1 Reception in progress

20.3.2.9 SCI Data Registers (SCIDRH, SCIDRL)

Module Base + 0x0006

	7	6	5	4	3	2	1	0
R	R8	T8	0	0	0	0	0	0
W								
Reset	0	0	0	0	0	0	0	0

= Unimplemented or Reserved

Figure 20-12. SCI Data Registers (SCIDRH)

Module Base + 0x0007

	7	6	5	4	3	2	1	0
R	R7	R6	R5	R4	R3	R2	R1	R0
W	T7	T6	T5	T4	T3	T2	T1	T0
Reset	0	0	0	0	0	0	0	0

Figure 20-13. SCI Data Registers (SCIDRL)

Read: Anytime; reading accesses SCI receive data register

Write: Anytime; writing accesses SCI transmit data register; writing to R8 has no effect

Table 20-13. SCIDRH and SCIDRL Field Descriptions

Field	Description
SCIDRH 7 R8	**Received Bit 8** — R8 is the ninth data bit received when the SCI is configured for 9-bit data format (M = 1).
SCIDRH 6 T8	**Transmit Bit 8** — T8 is the ninth data bit transmitted when the SCI is configured for 9-bit data format (M = 1).
SCIDRL 7:0 R[7:0] T[7:0]	**R7:R0** — Received bits seven through zero for 9-bit or 8-bit data formats **T7:T0** — Transmit bits seven through zero for 9-bit or 8-bit formats

NOTE

If the value of T8 is the same as in the previous transmission, T8 does not have to be rewritten.The same value is transmitted until T8 is rewritten

In 8-bit data format, only SCI data register low (SCIDRL) needs to be accessed.

When transmitting in 9-bit data format and using 8-bit write instructions, write first to SCI data register high (SCIDRH), then SCIDRL.

20.4 Functional Description

This section provides a complete functional description of the SCI block, detailing the operation of the design from the end user perspective in a number of subsections.

Figure 20-14 shows the structure of the SCI module. The SCI allows full duplex, asynchronous, serial communication between the CPU and remote devices, including other CPUs. The SCI transmitter and receiver operate independently, although they use the same baud rate generator. The CPU monitors the status of the SCI, writes the data to be transmitted, and processes received data.

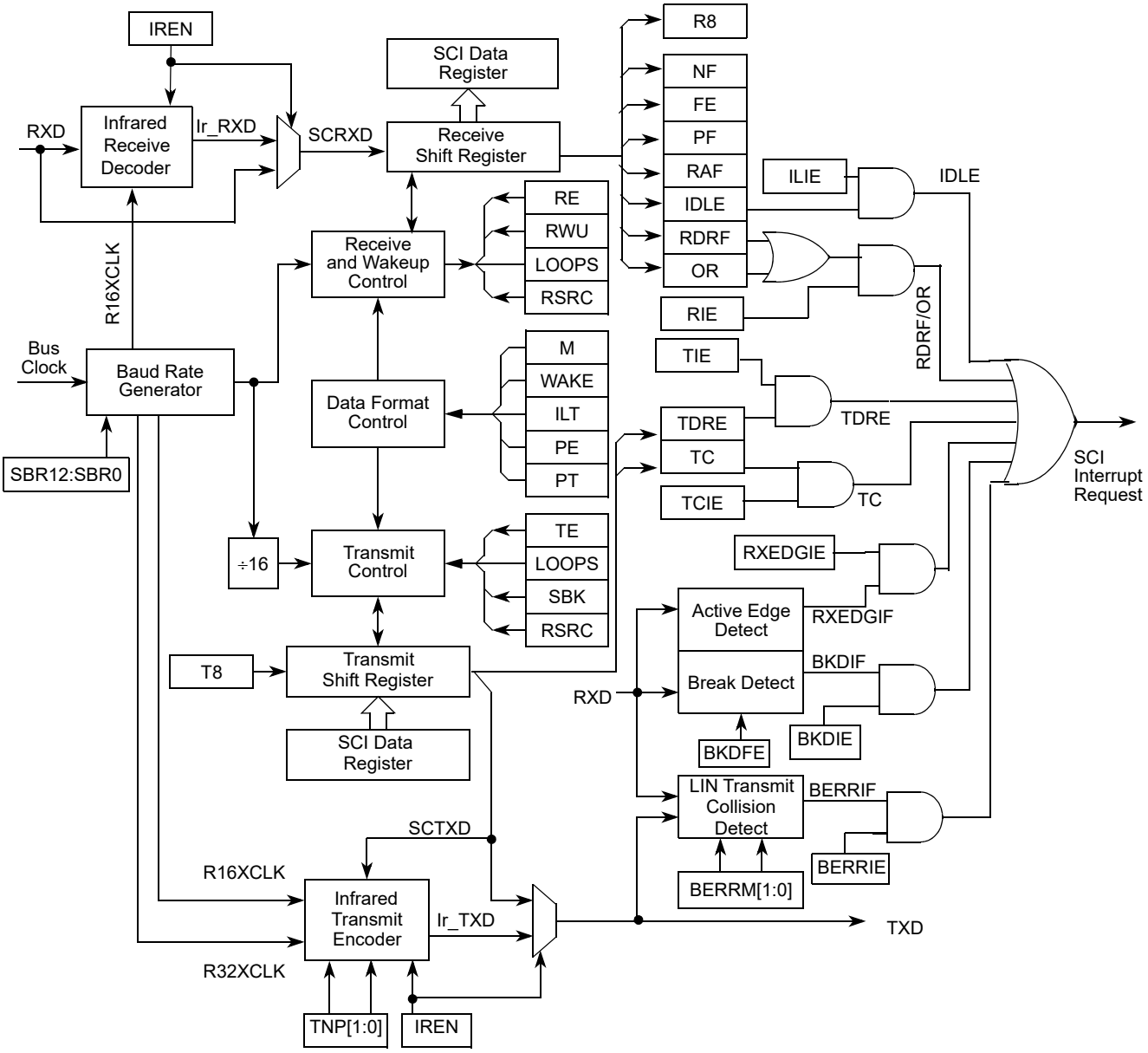

Figure 20-14. Detailed SCI Block Diagram

20.4.1 Infrared Interface Submodule

This module provides the capability of transmitting narrow pulses to an IR LED and receiving narrow pulses and transforming them to serial bits, which are sent to the SCI. The IrDA physical layer specification defines a half-duplex infrared communication link for exchange data. The full standard includes data rates up to 16 Mbits/s. This design covers only data rates between 2.4 Kbits/s and 115.2 Kbits/s.

The infrared submodule consists of two major blocks: the transmit encoder and the receive decoder. The SCI transmits serial bits of data which are encoded by the infrared submodule to transmit a narrow pulse

for every zero bit. No pulse is transmitted for every one bit. When receiving data, the IR pulses should be detected using an IR photo diode and transformed to CMOS levels by the IR receive decoder (external from the MCU). The narrow pulses are then stretched by the infrared submodule to get back to a serial bit stream to be received by the SCI.The polarity of transmitted pulses and expected receive pulses can be inverted so that a direct connection can be made to external IrDA transceiver modules that uses active low pulses.

The infrared submodule receives its clock sources from the SCI. One of these two clocks are selected in the infrared submodule in order to generate either 3/16, 1/16, 1/32 or 1/4 narrow pulses during transmission. The infrared block receives two clock sources from the SCI, R16XCLK and R32XCLK, which are configured to generate the narrow pulse width during transmission. The R16XCLK and R32XCLK are internal clocks with frequencies 16 and 32 times the baud rate respectively. Both R16XCLK and R32XCLK clocks are used for transmitting data. The receive decoder uses only the R16XCLK clock.

20.4.1.1 Infrared Transmit Encoder

The infrared transmit encoder converts serial bits of data from transmit shift register to the TXD pin. A narrow pulse is transmitted for a zero bit and no pulse for a one bit. The narrow pulse is sent in the middle of the bit with a duration of 1/32, 1/16, 3/16 or 1/4 of a bit time. A narrow high pulse is transmitted for a zero bit when TXPOL is cleared, while a narrow low pulse is transmitted for a zero bit when TXPOL is set.

20.4.1.2 Infrared Receive Decoder

The infrared receive block converts data from the RXD pin to the receive shift register. A narrow pulse is expected for each zero received and no pulse is expected for each one received. A narrow high pulse is expected for a zero bit when RXPOL is cleared, while a narrow low pulse is expected for a zero bit when RXPOL is set. This receive decoder meets the edge jitter requirement as defined by the IrDA serial infrared physical layer specification.

20.4.2 LIN Support

This module provides some basic support for the LIN protocol. At first this is a break detect circuitry making it easier for the LIN software to distinguish a break character from an incoming data stream. As a further addition is supports a collision detection at the bit level as well as cancelling pending transmissions.

20.4.3 Data Format

The SCI uses the standard NRZ mark/space data format. When Infrared is enabled, the SCI uses RZI data format where zeroes are represented by light pulses and ones remain low. See Figure 20-15 below.

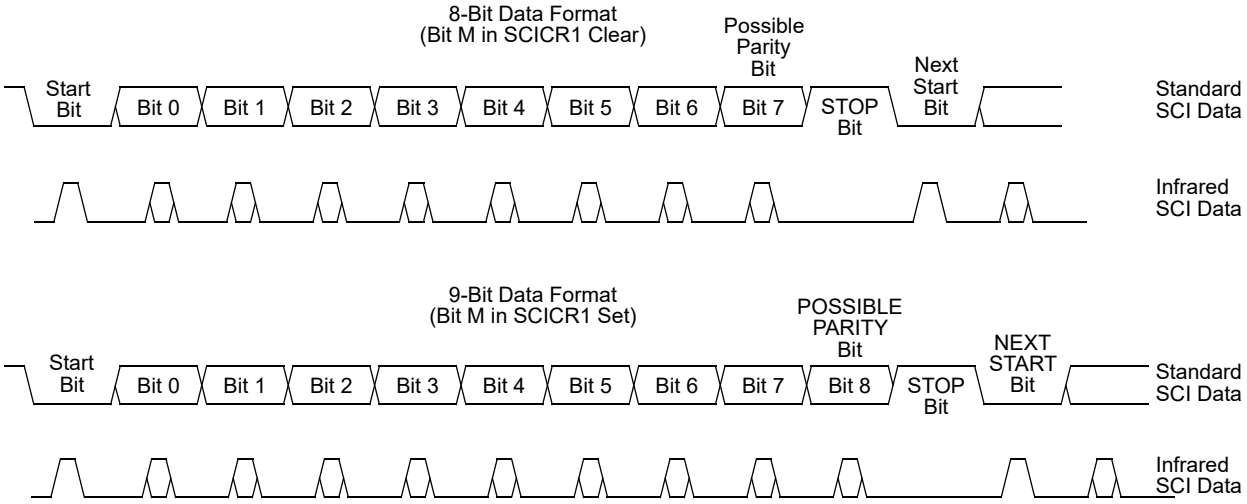

Figure 20-15. SCI Data Formats

Each data character is contained in a frame that includes a start bit, eight or nine data bits, and a stop bit. Clearing the M bit in SCI control register 1 configures the SCI for 8-bit data characters. A frame with eight data bits has a total of 10 bits. Setting the M bit configures the SCI for nine-bit data characters. A frame with nine data bits has a total of 11 bits.

Table 20-14. Example of 8-Bit Data Formats

Start Bit	Data Bits	Address Bits	Parity Bits	Stop Bit
1	8	0	0	1
1	7	0	1	1
1	7	1[1]	0	1

1 The address bit identifies the frame as an address character. See Section 20.4.6.6, “Receiver Wakeup”.

When the SCI is configured for 9-bit data characters, the ninth data bit is the T8 bit in SCI data register high (SCIDRH). It remains unchanged after transmission and can be used repeatedly without rewriting it. A frame with nine data bits has a total of 11 bits.

Table 20-15. Example of 9-Bit Data Formats

Start Bit	Data Bits	Address Bits	Parity Bits	Stop Bit
1	9	0	0	1
1	8	0	1	1
1	8	1[1]	0	1

1 The address bit identifies the frame as an address character. See Section 20.4.6.6, “Receiver Wakeup”.

20.4.4 Baud Rate Generation

A 13-bit modulus counter in the baud rate generator derives the baud rate for both the receiver and the transmitter. The value from 0 to 8191 written to the SBR12:SBR0 bits determines the bus clock divisor. The SBR bits are in the SCI baud rate registers (SCIBDH and SCIBDL). The baud rate clock is synchronized with the bus clock and drives the receiver. The baud rate clock divided by 16 drives the transmitter. The receiver has an acquisition rate of 16 samples per bit time.

Baud rate generation is subject to one source of error:

- Integer division of the bus clock may not give the exact target frequency.

Table 20-16 lists some examples of achieving target baud rates with a bus clock frequency of 25 MHz.

When IREN = 0 then,

SCI baud rate = SCI bus clock / (16 * SCIBR[12:0])

Table 20-16. Baud Rates (Example: Bus Clock = 25 MHz)

Bits SBR[12:0]	Receiver Clock (Hz)	Transmitter Clock (Hz)	Target Baud Rate	Error (%)
41	609,756.1	38,109.8	38,400	.76
81	308,642.0	19,290.1	19,200	.47
163	153,374.2	9585.9	9,600	.16
326	76,687.1	4792.9	4,800	.15
651	38,402.5	2400.2	2,400	.01
1302	19,201.2	1200.1	1,200	.01
2604	9600.6	600.0	600	.00
5208	4800.0	300.0	300	.00

20.4.5 Transmitter

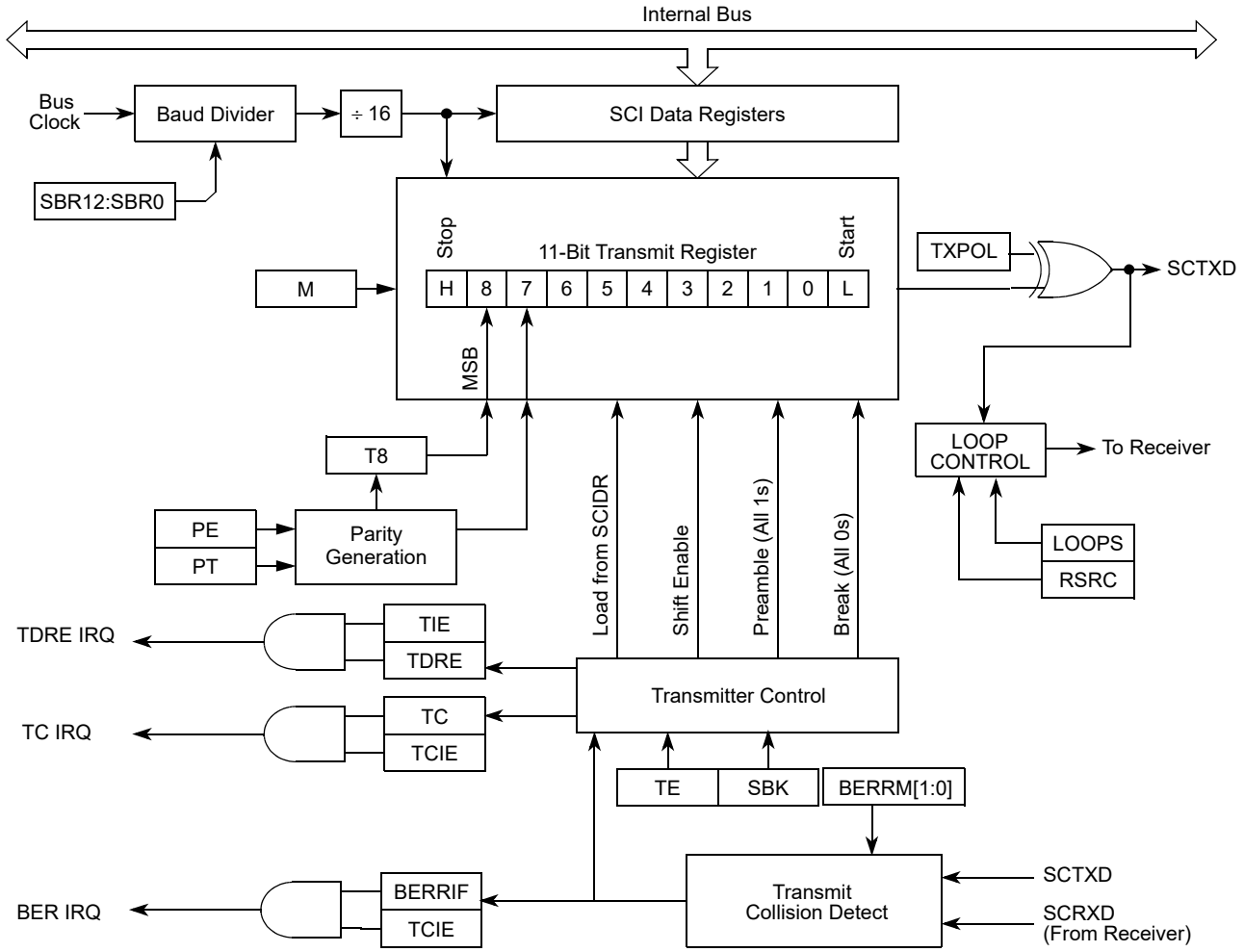

Figure 20-16. Transmitter Block Diagram

20.4.5.1 Transmitter Character Length

The SCI transmitter can accommodate either 8-bit or 9-bit data characters. The state of the M bit in SCI control register 1 (SCICR1) determines the length of data characters. When transmitting 9-bit data, bit T8 in SCI data register high (SCIDRH) is the ninth bit (bit 8).

20.4.5.2 Character Transmission

To transmit data, the MCU writes the data bits to the SCI data registers (SCIDRH/SCIDRL), which in turn are transferred to the transmitter shift register. The transmit shift register then shifts a frame out through the TXD pin, after it has prefaced them with a start bit and appended them with a stop bit. The SCI data registers (SCIDRH and SCIDRL) are the write-only buffers between the internal data bus and the transmit shift register.

The SCI also sets a flag, the transmit data register empty flag (TDRE), every time it transfers data from the buffer (SCIDRH/L) to the transmitter shift register.The transmit driver routine may respond to this flag by writing another byte to the Transmitter buffer (SCIDRH/SCIDRL), while the shift register is still shifting out the first byte.

To initiate an SCI transmission:

1. Configure the SCI:
   a) Select a baud rate. Write this value to the SCI baud registers (SCIBDH/L) to begin the baud rate generator. Remember that the baud rate generator is disabled when the baud rate is zero. Writing to the SCIBDH has no effect without also writing to SCIBDL.
   b) Write to SCICR1 to configure word length, parity, and other configuration bits (LOOPS,RSRC,M,WAKE,ILT,PE,PT).
   c) Enable the transmitter, interrupts, receive, and wake up as required, by writing to the SCICR2 register bits (TIE,TCIE,RIE,ILIE,TE,RE,RWU,SBK). A preamble or idle character will now be shifted out of the transmitter shift register.
2. Transmit Procedure for each byte:
   a) Poll the TDRE flag by reading the SCISR1 or responding to the TDRE interrupt. Keep in mind that the TDRE bit resets to one.
   b) If the TDRE flag is set, write the data to be transmitted to SCIDRH/L, where the ninth bit is written to the T8 bit in SCIDRH if the SCI is in 9-bit data format. A new transmission will not result until the TDRE flag has been cleared.
3. Repeat step 2 for each subsequent transmission.

NOTE

The TDRE flag is set when the shift register is loaded with the next data to be transmitted from SCIDRH/L, which happens, generally speaking, a little over half-way through the stop bit of the previous frame. Specifically, this transfer occurs 9/16ths of a bit time AFTER the start of the stop bit of the previous frame.

Writing the TE bit from 0 to a 1 automatically loads the transmit shift register with a preamble of 10 logic 1s (if M = 0) or 11 logic 1s (if M = 1). After the preamble shifts out, control logic transfers the data from the SCI data register into the transmit shift register. A logic 0 start bit automatically goes into the least significant bit position of the transmit shift register. A logic 1 stop bit goes into the most significant bit position.

Hardware supports odd or even parity. When parity is enabled, the most significant bit (MSB) of the data character is the parity bit.

The transmit data register empty flag, TDRE, in SCI status register 1 (SCISR1) becomes set when the SCI data register transfers a byte to the transmit shift register. The TDRE flag indicates that the SCI data register can accept new data from the internal data bus. If the transmit interrupt enable bit, TIE, in SCI control register 2 (SCICR2) is also set, the TDRE flag generates a transmitter interrupt request.

When the transmit shift register is not transmitting a frame, the TXD pin goes to the idle condition, logic 1. If at any time software clears the TE bit in SCI control register 2 (SCICR2), the transmitter enable signal goes low and the transmit signal goes idle.

If software clears TE while a transmission is in progress (TC = 0), the frame in the transmit shift register continues to shift out. To avoid accidentally cutting off the last frame in a message, always wait for TDRE to go high after the last frame before clearing TE.

To separate messages with preambles with minimum idle line time, use this sequence between messages:

1. Write the last byte of the first message to SCIDRH/L.
2. Wait for the TDRE flag to go high, indicating the transfer of the last frame to the transmit shift register.
3. Queue a preamble by clearing and then setting the TE bit.
4. Write the first byte of the second message to SCIDRH/L.

20.4.5.3 Break Characters

Writing a logic 1 to the send break bit, SBK, in SCI control register 2 (SCICR2) loads the transmit shift register with a break character. A break character contains all logic 0s and has no start, stop, or parity bit. Break character length depends on the M bit in SCI control register 1 (SCICR1). As long as SBK is at logic 1, transmitter logic continuously loads break characters into the transmit shift register. After software clears the SBK bit, the shift register finishes transmitting the last break character and then transmits at least one logic 1. The automatic logic 1 at the end of a break character guarantees the recognition of the start bit of the next frame.

The SCI recognizes a break character when there are 10 or 11(M = 0 or M = 1) consecutive zero received. Depending if the break detect feature is enabled or not receiving a break character has these effects on SCI registers.

If the break detect feature is disabled (BKDFE = 0):

- Sets the framing error flag, FE
- Sets the receive data register full flag, RDRF
- Clears the SCI data registers (SCIDRH/L)
- May set the overrun flag, OR, noise flag, NF, parity error flag, PE, or the receiver active flag, RAF (see 3.4.4 and 3.4.5 SCI Status Register 1 and 2)

If the break detect feature is enabled (BKDFE = 1) there are two scenarios[1]

The break is detected right from a start bit or is detected during a byte reception.

- Sets the break detect interrupt flag, BKDIF
- Does not change the data register full flag, RDRF or overrun flag OR
- Does not change the framing error flag FE, parity error flag PE.
- Does not clear the SCI data registers (SCIDRH/L)
- May set noise flag NF, or receiver active flag RAF.

1. A Break character in this context are either 10 or 11 consecutive zero received bits

Figure 20-17 shows two cases of break detect. In trace RXD_1 the break symbol starts with the start bit, while in RXD_2 the break starts in the middle of a transmission. If BRKDFE = 1, in RXD_1 case there will be no byte transferred to the receive buffer and the RDRF flag will not be modified. Also no framing error or parity error will be flagged from this transfer. In RXD_2 case, however the break signal starts later during the transmission. At the expected stop bit position the byte received so far will be transferred to the receive buffer, the receive data register full flag will be set, a framing error and if enabled and appropriate a parity error will be set. Once the break is detected the BRKDIF flag will be set.

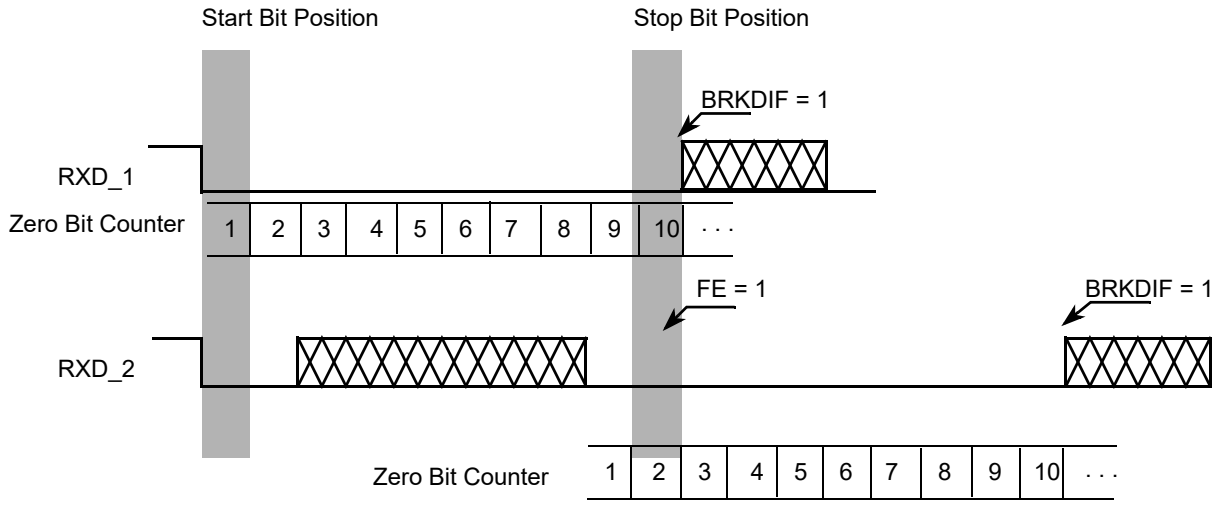

Figure 20-17. Break Detection if BRKDFE = 1 (M = 0)

20.4.5.4 Idle Characters

An idle character (or preamble) contains all logic 1s and has no start, stop, or parity bit. Idle character length depends on the M bit in SCI control register 1 (SCICR1). The preamble is a synchronizing idle character that begins the first transmission initiated after writing the TE bit from 0 to 1.

If the TE bit is cleared during a transmission, the TXD pin becomes idle after completion of the transmission in progress. Clearing and then setting the TE bit during a transmission queues an idle character to be sent after the frame currently being transmitted.

NOTE

When queueing an idle character, return the TE bit to logic 1 before the stop bit of the current frame shifts out through the TXD pin. Setting TE after the stop bit appears on TXD causes data previously written to the SCI data register to be lost. Toggle the TE bit for a queued idle character while the TDRE flag is set and immediately before writing the next byte to the SCI data register.

If the TE bit is clear and the transmission is complete, the SCI is not the master of the TXD pin

20.4.5.5 LIN Transmit Collision Detection

This module allows to check for collisions on the LIN bus.

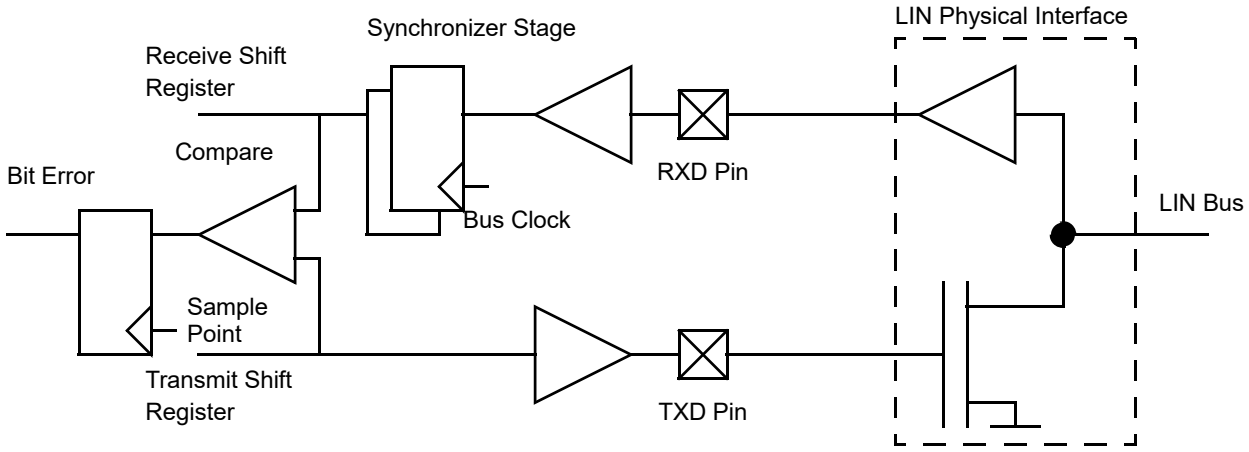

Figure 20-18. Collision Detect Principle

If the bit error circuit is enabled (BERRM[1:0] = 0:1 or = 1:0]), the error detect circuit will compare the transmitted and the received data stream at a point in time and flag any mismatch. The timing checks run when transmitter is active (not idle). As soon as a mismatch between the transmitted data and the received data is detected the following happens:

- The next bit transmitted will have a high level (TXPOL = 0) or low level (TXPOL = 1)
- The transmission is aborted and the byte in transmit buffer is discarded.
- the transmit data register empty and the transmission complete flag will be set
- The bit error interrupt flag, BERRIF, will be set.
- No further transmissions will take place until the BERRIF is cleared.

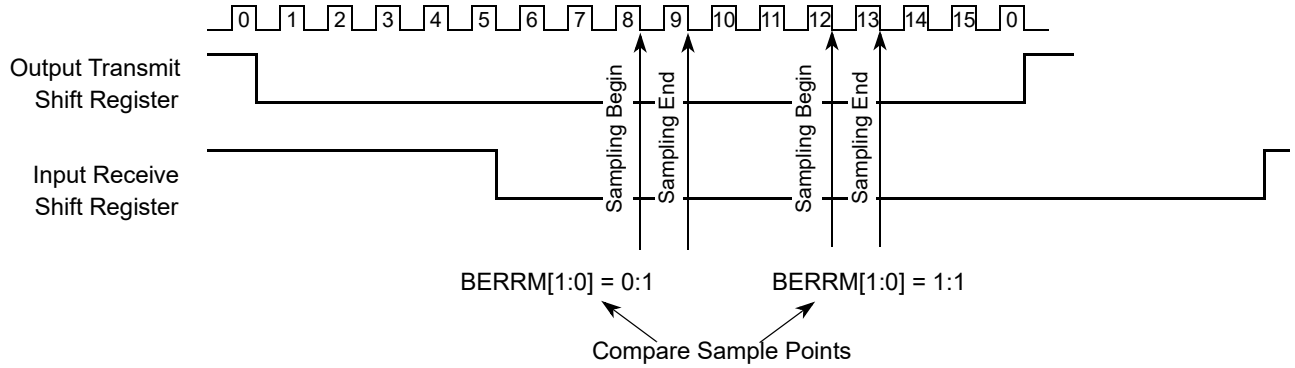

Figure 20-19. Timing Diagram Bit Error Detection

If the bit error detect feature is disabled, the bit error interrupt flag is cleared.

NOTE

The RXPOL and TXPOL bit should be set the same when transmission collision detect feature is enabled, otherwise the bit error interrupt flag may be set incorrectly.

20.4.6 Receiver

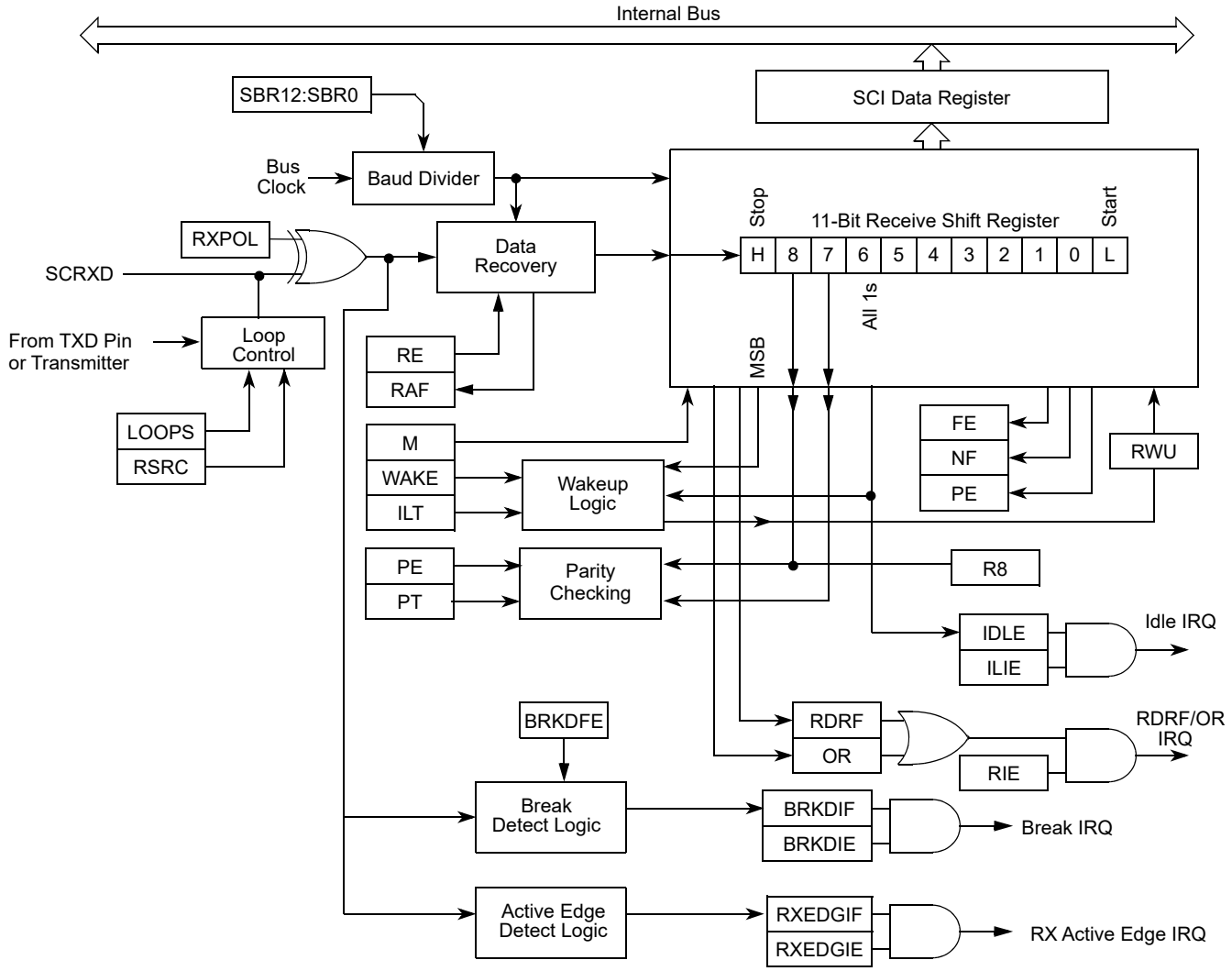

Figure 20-20. SCI Receiver Block Diagram

20.4.6.1 Receiver Character Length

The SCI receiver can accommodate either 8-bit or 9-bit data characters. The state of the M bit in SCI control register 1 (SCICR1) determines the length of data characters. When receiving 9-bit data, bit R8 in SCI data register high (SCIDRH) is the ninth bit (bit 8).

20.4.6.2 Character Reception

During an SCI reception, the receive shift register shifts a frame in from the RXD pin. The SCI data register is the read-only buffer between the internal data bus and the receive shift register.

After a complete frame shifts into the receive shift register, the data portion of the frame transfers to the SCI data register. The receive data register full flag, RDRF, in SCI status register 1 (SCISR1) becomes set,

indicating that the received byte can be read. If the receive interrupt enable bit, RIE, in SCI control register 2 (SCICR2) is also set, the RDRF flag generates an RDRF interrupt request.

20.4.6.3 Data Sampling

The RT clock rate. The RT clock is an internal signal with a frequency 16 times the baud rate. To adjust for baud rate mismatch, the RT clock (see Figure 20-21) is re-synchronized:

- After every start bit
- After the receiver detects a data bit change from logic 1 to logic 0 (after the majority of data bit samples at RT8, RT9, and RT10 returns a valid logic 1 and the majority of the next RT8, RT9, and RT10 samples returns a valid logic 0)

To locate the start bit, data recovery logic does an asynchronous search for a logic 0 preceded by three logic 1s.When the falling edge of a possible start bit occurs, the RT clock begins to count to 16.

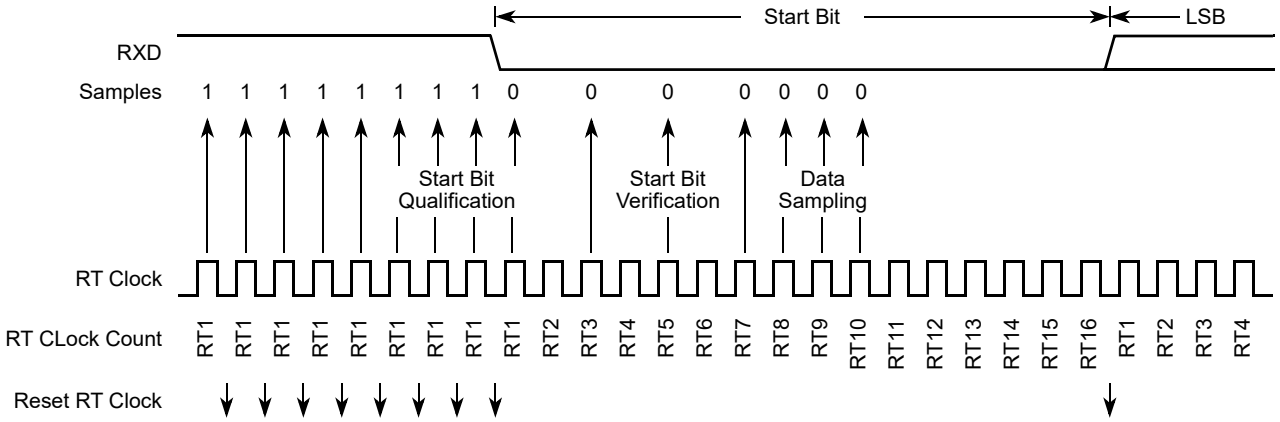

Figure 20-21. Receiver Data Sampling

To verify the start bit and to detect noise, data recovery logic takes samples at RT3, RT5, and RT7. Figure 20-17 summarizes the results of the start bit verification samples.

Table 20-17. Start Bit Verification

RT3, RT5, and RT7 Samples	Start Bit Verification	Noise Flag
000	Yes	0
001	Yes	1
010	Yes	1
011	No	0
100	Yes	1
101	No	0
110	No	0
111	No	0

If start bit verification is not successful, the RT clock is reset and a new search for a start bit begins.

To determine the value of a data bit and to detect noise, recovery logic takes samples at RT8, RT9, and RT10. Table 20-18 summarizes the results of the data bit samples.

Table 20-18. Data Bit Recovery

RT8, RT9, and RT10 Samples	Data Bit Determination	Noise Flag
000	0	0
001	0	1
010	0	1
011	1	1
100	0	1
101	1	1
110	1	1
111	1	0

NOTE

The RT8, RT9, and RT10 samples do not affect start bit verification. If any or all of the RT8, RT9, and RT10 start bit samples are logic 1s following a successful start bit verification, the noise flag (NF) is set and the receiver assumes that the bit is a start bit (logic 0).

To verify a stop bit and to detect noise, recovery logic takes samples at RT8, RT9, and RT10. Table 20-19 summarizes the results of the stop bit samples.

Table 20-19. Stop Bit Recovery

RT8, RT9, and RT10 Samples	Framing Error Flag	Noise Flag
000	1	0
001	1	1
010	1	1
011	0	1
100	1	1
101	0	1
110	0	1
111	0	0

In Figure 20-22 the verification samples RT3 and RT5 determine that the first low detected was noise and not the beginning of a start bit. The RT clock is reset and the start bit search begins again. The noise flag is not set because the noise occurred before the start bit was found.

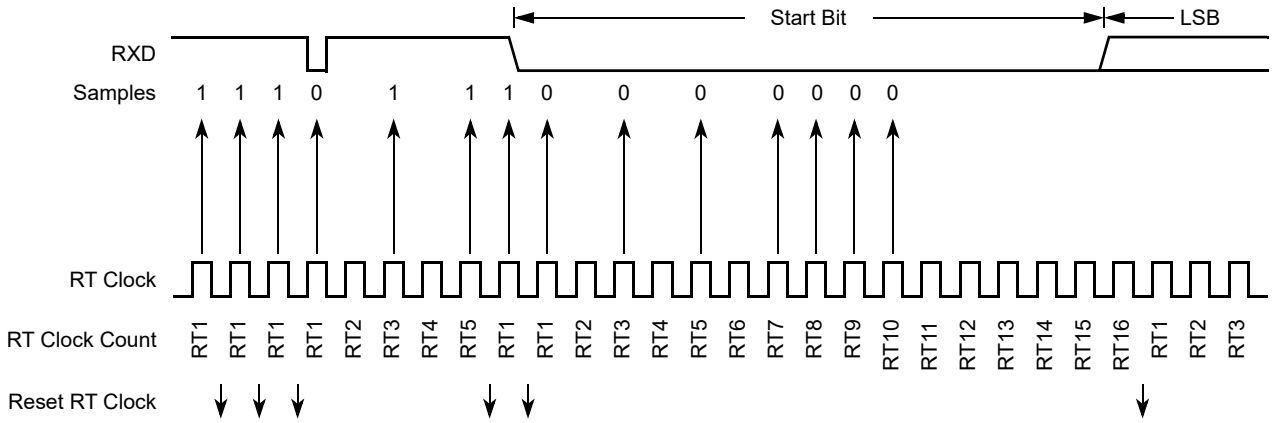

Figure 20-22. Start Bit Search Example 1

In Figure 20-23, verification sample at RT3 is high. The RT3 sample sets the noise flag. Although the perceived bit time is misaligned, the data samples RT8, RT9, and RT10 are within the bit time and data recovery is successful.

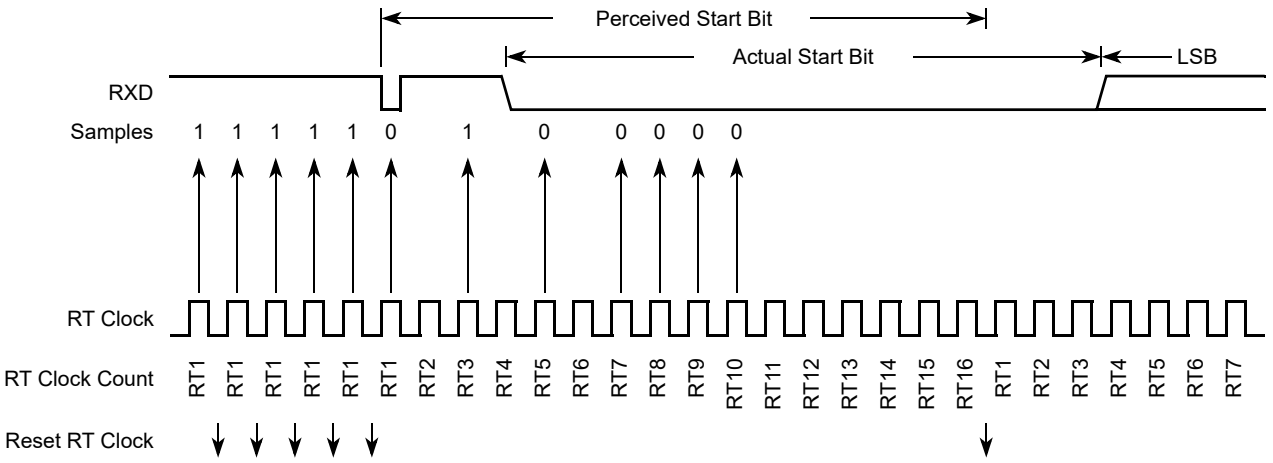

Figure 20-23. Start Bit Search Example 2

In Figure 20-24, a large burst of noise is perceived as the beginning of a start bit, although the test sample at RT5 is high. The RT5 sample sets the noise flag. Although this is a worst-case misalignment of perceived bit time, the data samples RT8, RT9, and RT10 are within the bit time and data recovery is successful.

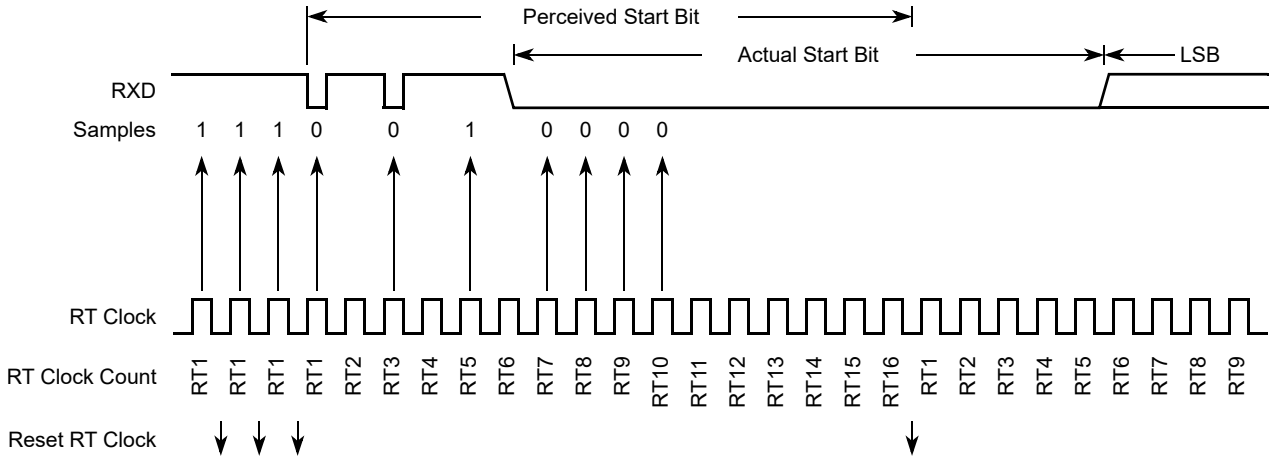

Figure 20-24. Start Bit Search Example 3

Figure 20-25 shows the effect of noise early in the start bit time. Although this noise does not affect proper synchronization with the start bit time, it does set the noise flag.

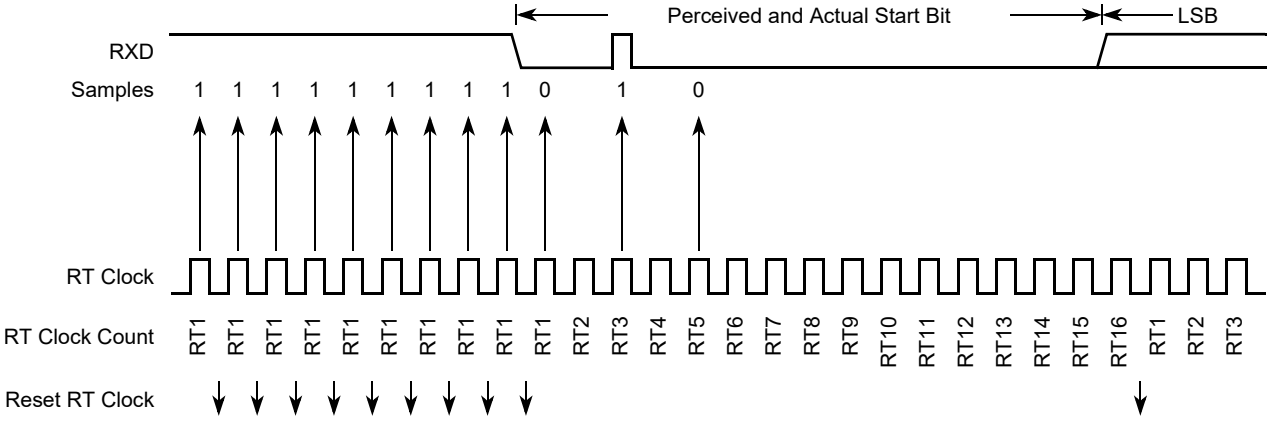

Figure 20-25. Start Bit Search Example 4

Figure 20-26 shows a burst of noise near the beginning of the start bit that resets the RT clock. The sample after the reset is low but is not preceded by three high samples that would qualify as a falling edge. Depending on the timing of the start bit search and on the data, the frame may be missed entirely or it may set the framing error flag.

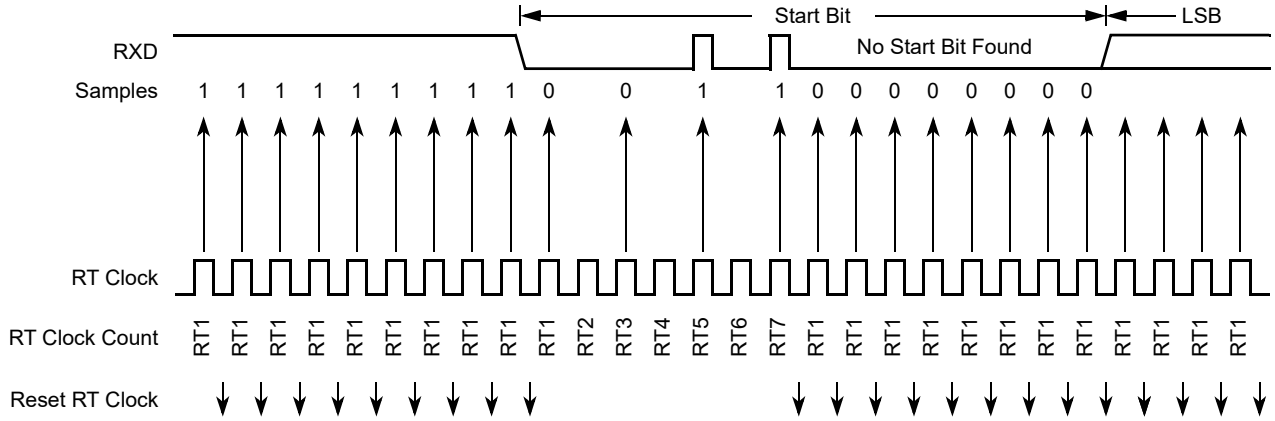

Figure 20-26. Start Bit Search Example 5

In Figure 20-27, a noise burst makes the majority of data samples RT8, RT9, and RT10 high. This sets the noise flag but does not reset the RT clock. In start bits only, the RT8, RT9, and RT10 data samples are ignored.

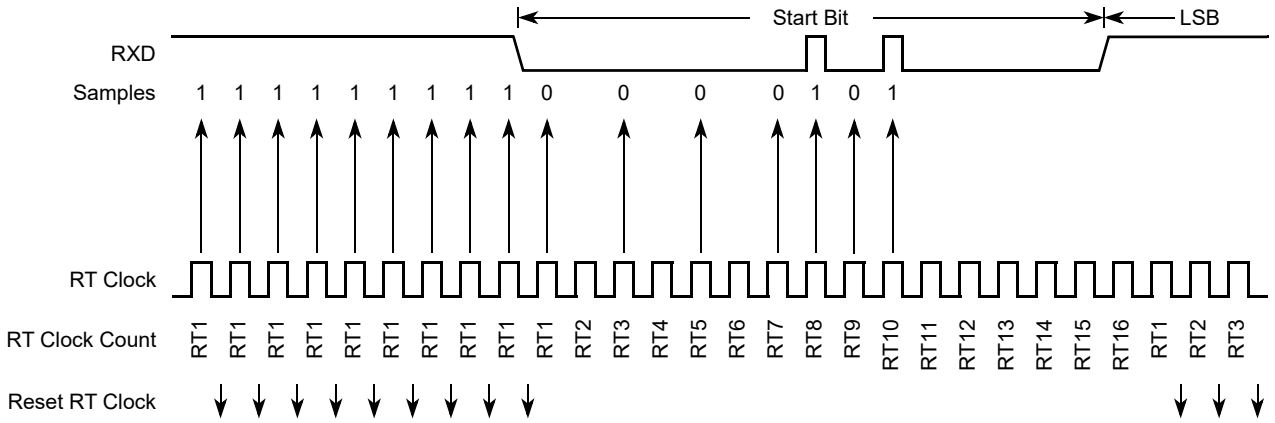

Figure 20-27. Start Bit Search Example 6

20.4.6.4 Framing Errors

If the data recovery logic does not detect a logic 1 where the stop bit should be in an incoming frame, it sets the framing error flag, FE, in SCI status register 1 (SCISR1). A break character also sets the FE flag because a break character has no stop bit. The FE flag is set at the same time that the RDRF flag is set.

20.4.6.5 Baud Rate Tolerance

A transmitting device may be operating at a baud rate below or above the receiver baud rate. Accumulated bit time misalignment can cause one of the three stop bit data samples (RT8, RT9, and RT10) to fall outside the actual stop bit. A noise error will occur if the RT8, RT9, and RT10 samples are not all the same logical values. A framing error will occur if the receiver clock is misaligned in such a way that the majority of the RT8, RT9, and RT10 stop bit samples are a logic zero.

As the receiver samples an incoming frame, it re-synchronizes the RT clock on any valid falling edge within the frame. Re synchronization within frames will correct a misalignment between transmitter bit times and receiver bit times.

20.4.6.5.1 Slow Data Tolerance

Figure 20-28 shows how much a slow received frame can be misaligned without causing a noise error or a framing error. The slow stop bit begins at RT8 instead of RT1 but arrives in time for the stop bit data samples at RT8, RT9, and RT10.

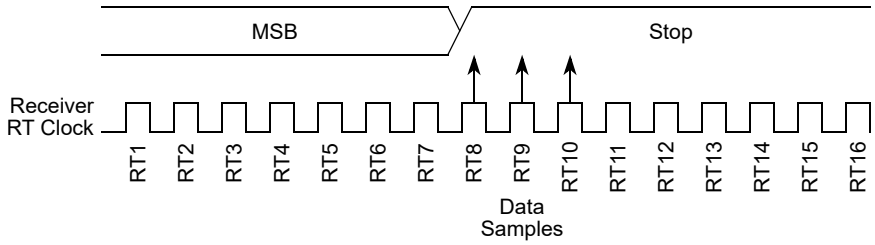

Figure 20-28. Slow Data

Let’s take RTr as receiver RT clock and RTt as transmitter RT clock.

For an 8-bit data character, it takes the receiver 9 bit times x 16 RTr cycles +7 RTr cycles = 151 RTr cycles to start data sampling of the stop bit.

With the misaligned character shown in Figure 20-28, the receiver counts 151 RTr cycles at the point when the count of the transmitting device is 9 bit times x 16 RTt cycles = 144 RTt cycles.

The maximum percent difference between the receiver count and the transmitter count of a slow 8-bit data character with no errors is:

((151 – 144) / 151) x 100 = 4.63%

For a 9-bit data character, it takes the receiver 10 bit times x 16 RTr cycles + 7 RTr cycles = 167 RTr cycles to start data sampling of the stop bit.

With the misaligned character shown in Figure 20-28, the receiver counts 167 RTr cycles at the point when the count of the transmitting device is 10 bit times x 16 RTt cycles = 160 RTt cycles.

The maximum percent difference between the receiver count and the transmitter count of a slow 9-bit character with no errors is:

((167 – 160) / 167) X 100 = 4.19%

20.4.6.5.2 Fast Data Tolerance

Figure 20-29 shows how much a fast received frame can be misaligned. The fast stop bit ends at RT10 instead of RT16 but is still sampled at RT8, RT9, and RT10.

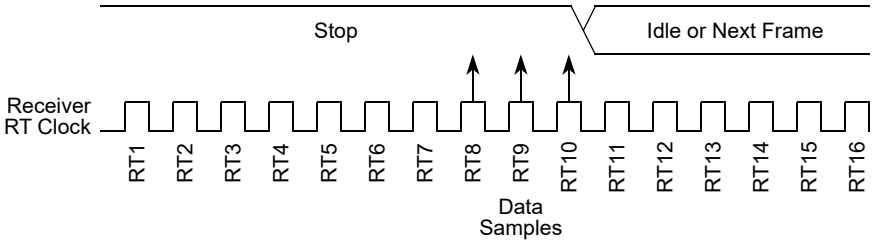

Figure 20-29. Fast Data

For an 8-bit data character, it takes the receiver 9 bit times x 16 RTr cycles + 10 RTr cycles = 154 RTr cycles to finish data sampling of the stop bit.

With the misaligned character shown in Figure 20-29, the receiver counts 154 RTr cycles at the point when the count of the transmitting device is 10 bit times x 16 RTt cycles = 160 RTt cycles.

The maximum percent difference between the receiver count and the transmitter count of a fast 8-bit character with no errors is:

((160 – 154) / 160) x 100 = 3.75%

For a 9-bit data character, it takes the receiver 10 bit times x 16 RTr cycles + 10 RTr cycles = 170 RTr cycles to finish data sampling of the stop bit.

With the misaligned character shown in Figure 20-29, the receiver counts 170 RTr cycles at the point when the count of the transmitting device is 11 bit times x 16 RTt cycles = 176 RTt cycles.

The maximum percent difference between the receiver count and the transmitter count of a fast 9-bit character with no errors is:

((176 – 170) /176) x 100 = 3.40%

20.4.6.6 Receiver Wakeup

To enable the SCI to ignore transmissions intended only for other receivers in multiple-receiver systems, the receiver can be put into a standby state. Setting the receiver wakeup bit, RWU, in SCI control register 2 (SCICR2) puts the receiver into standby state during which receiver interrupts are disabled.The SCI will still load the receive data into the SCIDRH/L registers, but it will not set the RDRF flag.

The transmitting device can address messages to selected receivers by including addressing information in the initial frame or frames of each message.

The WAKE bit in SCI control register 1 (SCICR1) determines how the SCI is brought out of the standby state to process an incoming message. The WAKE bit enables either idle line wakeup or address mark wakeup.

20.4.6.6.1 Idle Input line Wakeup (WAKE = 0)

In this wakeup method, an idle condition on the RXD pin clears the RWU bit and wakes up the SCI. The initial frame or frames of every message contain addressing information. All receivers evaluate the addressing information, and receivers for which the message is addressed process the frames that follow. Any receiver for which a message is not addressed can set its RWU bit and return to the standby state. The

RWU bit remains set and the receiver remains on standby until another idle character appears on the RXD pin.

Idle line wakeup requires that messages be separated by at least one idle character and that no message contains idle characters.

The idle character that wakes a receiver does not set the receiver idle bit, IDLE, or the receive data register full flag, RDRF.

The idle line type bit, ILT, determines whether the receiver begins counting logic 1s as idle character bits after the start bit or after the stop bit. ILT is in SCI control register 1 (SCICR1).

20.4.6.6.2 Address Mark Wakeup (WAKE = 1)

In this wakeup method, a logic 1 in the most significant bit (MSB) position of a frame clears the RWU bit and wakes up the SCI. The logic 1 in the MSB position marks a frame as an address frame that contains addressing information. All receivers evaluate the addressing information, and the receivers for which the message is addressed process the frames that follow.Any receiver for which a message is not addressed can set its RWU bit and return to the standby state. The RWU bit remains set and the receiver remains on standby until another address frame appears on the RXD pin.

The logic 1 MSB of an address frame clears the receiver's RWU bit before the stop bit is received and sets the RDRF flag.

Address mark wakeup allows messages to contain idle characters but requires that the MSB be reserved for use in address frames.

NOTE

With the WAKE bit clear, setting the RWU bit after the RXD pin has been idle can cause the receiver to wake up immediately.

20.4.7 Single-Wire Operation

Normally, the SCI uses two pins for transmitting and receiving. In single-wire operation, the RXD pin is disconnected from the SCI. The SCI uses the TXD pin for both receiving and transmitting.

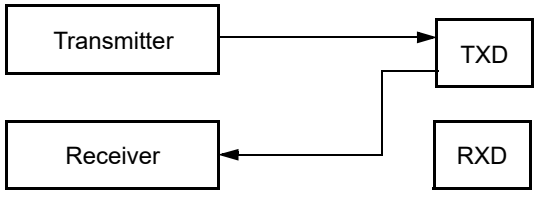

Figure 20-30. Single-Wire Operation (LOOPS = 1, RSRC = 1)

Enable single-wire operation by setting the LOOPS bit and the receiver source bit, RSRC, in SCI control register 1 (SCICR1). Setting the LOOPS bit disables the path from the RXD pin to the receiver. Setting the RSRC bit connects the TXD pin to the receiver. Both the transmitter and receiver must be enabled (TE = 1 and RE = 1).The TXDIR bit (SCISR2[1]) determines whether the TXD pin is going to be used as an input (TXDIR = 0) or an output (TXDIR = 1) in this mode of operation.

NOTE

In single-wire operation data from the TXD pin is inverted if RXPOL is set.

20.4.8 Loop Operation

In loop operation the transmitter output goes to the receiver input. The RXD pin is disconnected from the SCI.

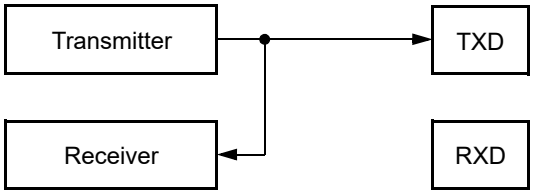

Figure 20-31. Loop Operation (LOOPS = 1, RSRC = 0)

Enable loop operation by setting the LOOPS bit and clearing the RSRC bit in SCI control register 1 (SCICR1). Setting the LOOPS bit disables the path from the RXD pin to the receiver. Clearing the RSRC bit connects the transmitter output to the receiver input. Both the transmitter and receiver must be enabled (TE = 1 and RE = 1).

NOTE

In loop operation data from the transmitter is not recognized by the receiver if RXPOL and TXPOL are not the same.

20.5 Initialization/Application Information

20.5.1 Reset Initialization

See Section 20.3.2, “Register Descriptions”.

20.5.2 Modes of Operation

20.5.2.1 Run Mode

Normal mode of operation.

To initialize a SCI transmission, see Section 20.4.5.2, “Character Transmission”.

20.5.2.2 Wait Mode

SCI operation in wait mode depends on the state of the SCISWAI bit in the SCI control register 1 (SCICR1).

- If SCISWAI is clear, the SCI operates normally when the CPU is in wait mode.
- If SCISWAI is set, SCI clock generation ceases and the SCI module enters a power-conservation state when the CPU is in wait mode. Setting SCISWAI does not affect the state of the receiver enable bit, RE, or the transmitter enable bit, TE.

If SCISWAI is set, any transmission or reception in progress stops at wait mode entry. The transmission or reception resumes when either an internal or external interrupt brings the CPU out of wait mode. Exiting wait mode by reset aborts any transmission or reception in progress and resets the SCI.

20.5.2.3 Stop Mode

The SCI is inactive during stop mode for reduced power consumption. The STOP instruction does not affect the SCI register states, but the SCI bus clock will be disabled. The SCI operation resumes from where it left off after an external interrupt brings the CPU out of stop mode. Exiting stop mode by reset aborts any transmission or reception in progress and resets the SCI.

The receive input active edge detect circuit is still active in stop mode. An active edge on the receive input can be used to bring the CPU out of stop mode.

20.5.3 Interrupt Operation

This section describes the interrupt originated by the SCI block.The MCU must service the interrupt requests. Table 20-20 lists the eight interrupt sources of the SCI.

Table 20-20. SCI Interrupt Sources

Interrupt	Source	Local Enable	Description
TDRE	SCISR1[7]	TIE	Active high level. Indicates that a byte was transferred from SCIDRH/L to the transmit shift register.
TC	SCISR1[6]	TCIE	Active high level. Indicates that a transmit is complete.
RDRF	SCISR1[5]	RIE	Active high level. The RDRF interrupt indicates that received data is available in the SCI data register.
OR	SCISR1[3]		Active high level. This interrupt indicates that an overrun condition has occurred.
IDLE	SCISR1[4]	ILIE	Active high level. Indicates that receiver input has become idle.
RXEDGIF	SCIASR1[7]	RXEDGIE	Active high level. Indicates that an active edge (falling for RXPOL = 0, rising for RXPOL = 1) was detected.
BERRIF	SCIASR1[1]	BERRIE	Active high level. Indicates that a mismatch between transmitted and received data in a single wire application has happened.
BKDIF	SCIASR1[0]	BRKDIE	Active high level. Indicates that a break character has been received.

20.5.3.1 Description of Interrupt Operation

The SCI only originates interrupt requests. The following is a description of how the SCI makes a request and how the MCU should acknowledge that request. The interrupt vector offset and interrupt number are chip dependent. The SCI only has a single interrupt line (SCI Interrupt Signal, active high operation) and all the following interrupts, when generated, are ORed together and issued through that port.

20.5.3.1.1 TDRE Description

The TDRE interrupt is set high by the SCI when the transmit shift register receives a byte from the SCI data register. A TDRE interrupt indicates that the transmit data register (SCIDRH/L) is empty and that a

new byte can be written to the SCIDRH/L for transmission.Clear TDRE by reading SCI status register 1 with TDRE set and then writing to SCI data register low (SCIDRL).

20.5.3.1.2 TC Description

The TC interrupt is set by the SCI when a transmission has been completed. Transmission is completed when all bits including the stop bit (if transmitted) have been shifted out and no data is queued to be transmitted. No stop bit is transmitted when sending a break character and the TC flag is set (providing there is no more data queued for transmission) when the break character has been shifted out. A TC interrupt indicates that there is no transmission in progress. TC is set high when the TDRE flag is set and no data, preamble, or break character is being transmitted. When TC is set, the TXD pin becomes idle (logic 1). Clear TC by reading SCI status register 1 (SCISR1) with TC set and then writing to SCI data register low (SCIDRL).TC is cleared automatically when data, preamble, or break is queued and ready to be sent.

20.5.3.1.3 RDRF Description

The RDRF interrupt is set when the data in the receive shift register transfers to the SCI data register. A RDRF interrupt indicates that the received data has been transferred to the SCI data register and that the byte can now be read by the MCU. The RDRF interrupt is cleared by reading the SCI status register one (SCISR1) and then reading SCI data register low (SCIDRL).

20.5.3.1.4 OR Description

The OR interrupt is set when software fails to read the SCI data register before the receive shift register receives the next frame. The newly acquired data in the shift register will be lost in this case, but the data already in the SCI data registers is not affected. The OR interrupt is cleared by reading the SCI status register one (SCISR1) and then reading SCI data register low (SCIDRL).

20.5.3.1.5 IDLE Description

The IDLE interrupt is set when 10 consecutive logic 1s (if M = 0) or 11 consecutive logic 1s (if M = 1) appear on the receiver input. Once the IDLE is cleared, a valid frame must again set the RDRF flag before an idle condition can set the IDLE flag. Clear IDLE by reading SCI status register 1 (SCISR1) with IDLE set and then reading SCI data register low (SCIDRL).

20.5.3.1.6 RXEDGIF Description

The RXEDGIF interrupt is set when an active edge (falling if RXPOL = 0, rising if RXPOL = 1) on the RXD pin is detected. Clear RXEDGIF by writing a “1” to the SCIASR1 SCI alternative status register 1.

20.5.3.1.7 BERRIF Description

The BERRIF interrupt is set when a mismatch between the transmitted and the received data in a single wire application like LIN was detected. Clear BERRIF by writing a “1” to the SCIASR1 SCI alternative status register 1. This flag is also cleared if the bit error detect feature is disabled.

20.5.3.1.8 BKDIF Description

The BKDIF interrupt is set when a break signal was received. Clear BKDIF by writing a “1” to the SCIASR1 SCI alternative status register 1. This flag is also cleared if break detect feature is disabled.

20.5.4 Recovery from Wait Mode

The SCI interrupt request can be used to bring the CPU out of wait mode.

20.5.5 Recovery from Stop Mode

An active edge on the receive input can be used to bring the CPU out of stop mode.

Chapter 21
Serial Peripheral Interface (S12SPIV5)

Revision History

Revision Number	Date	Author	Summary of Changes
05.00	24 MAR 2005		Added 16-bit transfer width feature.

21.1 Introduction

The SPI module allows a duplex, synchronous, serial communication between the MCU and peripheral devices. Software can poll the SPI status flags or the SPI operation can be interrupt driven.

21.1.1 Glossary of Terms

SPI	Serial Peripheral Interface
$\overline{SS}$	Slave Select
SCK	Serial Clock
MOSI	Master Output, Slave Input
MISO	Master Input, Slave Output
MOMI	Master Output, Master Input
SISO	Slave Input, Slave Output

21.1.2 Features

The SPI includes these distinctive features:

- Master mode and slave mode
- Selectable 8 or 16-bit transfer width
- Bidirectional mode
- Slave select output
- Mode fault error flag with CPU interrupt capability

- Double-buffered data register
- Serial clock with programmable polarity and phase
- Control of SPI operation during wait mode

21.1.3 Modes of Operation

The SPI functions in three modes: run, wait, and stop.

- Run mode

  This is the basic mode of operation.
- Wait mode

  SPI operation in wait mode is a configurable low power mode, controlled by the SPISWAI bit located in the SPICR2 register. In wait mode, if the SPISWAI bit is clear, the SPI operates like in run mode. If the SPISWAI bit is set, the SPI goes into a power conservative state, with the SPI clock generation turned off. If the SPI is configured as a master, any transmission in progress stops, but is resumed after CPU goes into run mode. If the SPI is configured as a slave, reception and transmission of data continues, so that the slave stays synchronized to the master.
- Stop mode

  The SPI is inactive in stop mode for reduced power consumption. If the SPI is configured as a master, any transmission in progress stops, but is resumed after CPU goes into run mode. If the SPI is configured as a slave, reception and transmission of data continues, so that the slave stays synchronized to the master.

For a detailed description of operating modes, please refer to Section 21.4.7, “Low Power Mode Options”.

21.1.4 Block Diagram

Figure 21-1 gives an overview on the SPI architecture. The main parts of the SPI are status, control and data registers, shifter logic, baud rate generator, master/slave control logic, and port control logic.

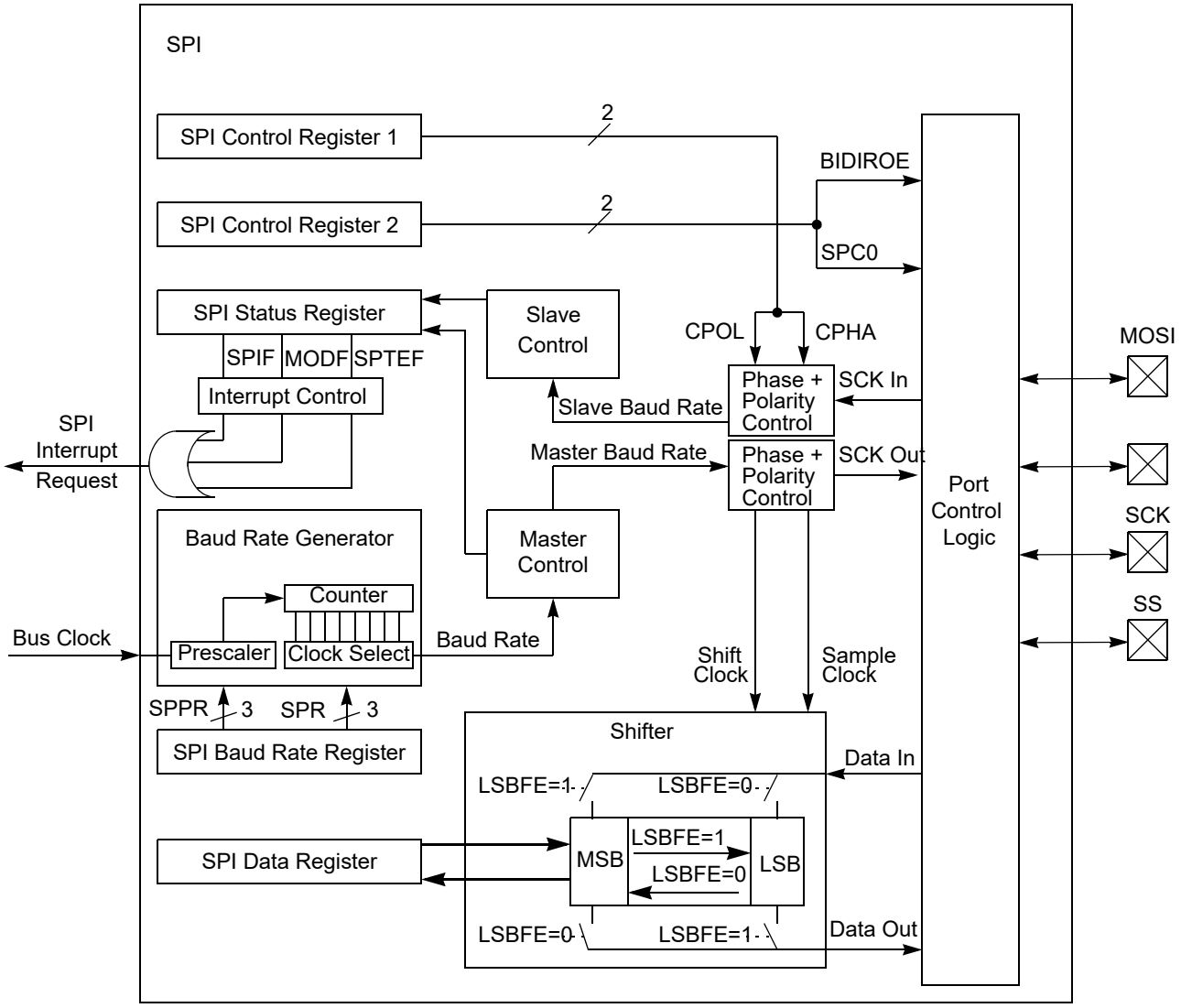

Figure 21-1. SPI Block Diagram

21.2 External Signal Description

This section lists the name and description of all ports including inputs and outputs that do, or may, connect off chip. The SPI module has a total of four external pins.

21.2.1 MOSI — Master Out/Slave In Pin

This pin is used to transmit data out of the SPI module when it is configured as a master and receive data when it is configured as slave.

21.2.2 MISO — Master In/Slave Out Pin

This pin is used to transmit data out of the SPI module when it is configured as a slave and receive data when it is configured as master.

21.2.3 $\overline{SS}$ — Slave Select Pin

This pin is used to output the select signal from the SPI module to another peripheral with which a data transfer is to take place when it is configured as a master and it is used as an input to receive the slave select signal when the SPI is configured as slave.

21.2.4 SCK — Serial Clock Pin

In master mode, this is the synchronous output clock. In slave mode, this is the synchronous input clock.

21.3 Memory Map and Register Definition

This section provides a detailed description of address space and registers used by the SPI.

21.3.1 Module Memory Map

The memory map for the SPI is given in Figure 21-2. The address listed for each register is the sum of a base address and an address offset. The base address is defined at the SoC level and the address offset is defined at the module level. Reads from the reserved bits return zeros and writes to the reserved bits have no effect.

Register Name		Bit 7	6	5	4	3	2	1	Bit 0
0x0000 SPICR1	R	SPIE	SPE	SPTIE	MSTR	CPOL	CPHA	SSOE	LSBFE
	W								
0x0001 SPICR2	R	0	XFRW	0	MODFEN	BIDIROE	0	SPISWAI	SPC0
	W								
0x0002 SPIBR	R	0	SPPR2	SPPR1	SPPR0	0	SPR2	SPR1	SPR0
	W								
0x0003 SPISR	R	SPIF	0	SPTEF	MODF	0	0	0	0
	W								
0x0004 SPIDRH	R	R15	R14	R13	R12	R11	R10	R9	R8
	W	T15	T14	T13	T12	T11	T10	T9	T8

= Unimplemented or Reserved

Figure 21-2. SPI Register Summary

Register Name		Bit 7	6	5	4	3	2	1	Bit 0
0x0005 SPIDRL	R	R7	R6	R5	R4	R3	R2	R1	R0
	W	T7	T6	T5	T4	T3	T2	T1	T0
0x0006 Reserved	R								
	W								
0x0007 Reserved	R								
	W								

= Unimplemented or Reserved

Figure 21-2. SPI Register Summary

21.3.2 Register Descriptions

This section consists of register descriptions in address order. Each description includes a standard register diagram with an associated figure number. Details of register bit and field function follow the register diagrams, in bit order.

21.3.2.1 SPI Control Register 1 (SPICR1)

Module Base +0x0000

	7	6	5	4	3	2	1	0
R W	SPIE	SPE	SPTIE	MSTR	CPOL	CPHA	SSOE	LSBFE
Reset	0	0	0	0	0	1	0	0

Figure 21-3. SPI Control Register 1 (SPICR1)

Read: Anytime

Write: Anytime

Table 21-1. SPICR1 Field Descriptions

Field	Description
7 SPIE	**SPI Interrupt Enable Bit** — This bit enables SPI interrupt requests, if SPIF or MODF status flag is set. 0 SPI interrupts disabled. 1 SPI interrupts enabled.
6 SPE	**SPI System Enable Bit** — This bit enables the SPI system and dedicates the SPI port pins to SPI system functions. If SPE is cleared, SPI is disabled and forced into idle state, status bits in SPISR register are reset. 0 SPI disabled (lower power consumption). 1 SPI enabled, port pins are dedicated to SPI functions.
5 SPTIE	**SPI Transmit Interrupt Enable** — This bit enables SPI interrupt requests, if SPTEF flag is set. 0 SPTEF interrupt disabled. 1 SPTEF interrupt enabled.

Table 21-1. SPICR1 Field Descriptions

Field	Description
4 MSTR	**SPI Master/Slave Mode Select Bit** — This bit selects whether the SPI operates in master or slave mode. Switching the SPI from master to slave or vice versa forces the SPI system into idle state. 0 SPI is in slave mode. 1 SPI is in master mode.
3 CPOL	**SPI Clock Polarity Bit** — This bit selects an inverted or non-inverted SPI clock. To transmit data between SPI modules, the SPI modules must have identical CPOL values. In master mode, a change of this bit will abort a transmission in progress and force the SPI system into idle state. 0 Active-high clocks selected. In idle state SCK is low. 1 Active-low clocks selected. In idle state SCK is high.
2 CPHA	**SPI Clock Phase Bit** — This bit is used to select the SPI clock format. In master mode, a change of this bit will abort a transmission in progress and force the SPI system into idle state. 0 Sampling of data occurs at odd edges (1,3,5,...) of the SCK clock. 1 Sampling of data occurs at even edges (2,4,6,...) of the SCK clock.
1 SSOE	**Slave Select Output Enable** — The $\overline{SS}$ output feature is enabled only in master mode, if MODFEN is set, by asserting the SSOE as shown in Table 21-2. In master mode, a change of this bit will abort a transmission in progress and force the SPI system into idle state.
0 LSBFE	**LSB-First Enable** — This bit does not affect the position of the MSB and LSB in the data register. Reads and writes of the data register always have the MSB in the highest bit position. In master mode, a change of this bit will abort a transmission in progress and force the SPI system into idle state. 0 Data is transferred most significant bit first. 1 Data is transferred least significant bit first.

Table 21-2. $\overline{SS}$ Input / Output Selection

MODFEN	SSOE	Master Mode	Slave Mode
0	0	$\overline{SS}$ not used by SPI	$\overline{SS}$ input
0	1	$\overline{SS}$ not used by SPI	$\overline{SS}$ input
1	0	$\overline{SS}$ input with MODF feature	$\overline{SS}$ input
1	1	$\overline{SS}$ is slave select output	$\overline{SS}$ input

21.3.2.2 SPI Control Register 2 (SPICR2)

Module Base +0x0001

	7	6	5	4	3	2	1	0
R	0	XFRW	0	MODFEN	BIDIROE	0	SPISWAI	SPC0
W								
Reset	0	0	0	0	0	0	0	0

= Unimplemented or Reserved

Figure 21-4. SPI Control Register 2 (SPICR2)

Read: Anytime

Write: Anytime; writes to the reserved bits have no effect

Table 21-3. SPICR2 Field Descriptions

Field	Description
6 XFRW	**Transfer Width —** This bit is used for selecting the data transfer width. If 8-bit transfer width is selected, SPIDRL becomes the dedicated data register and SPIDRH is unused. If 16-bit transfer width is selected, SPIDRH and SPIDRL form a 16-bit data register. Please refer to Section 21.3.2.4, “SPI Status Register (SPISR) for information about transmit/receive data handling and the interrupt flag clearing mechanism. In master mode, a change of this bit will abort a transmission in progress and force the SPI system into idle state. 0 8-bit Transfer Width (n = 8)[1] 1 16-bit Transfer Width (n = 16)[1]
4 MODFEN	**Mode Fault Enable Bit** — This bit allows the MODF failure to be detected. If the SPI is in master mode and MODFEN is cleared, then the $\overline{SS}$ port pin is not used by the SPI. In slave mode, the $\overline{SS}$ is available only as an input regardless of the value of MODFEN. For an overview on the impact of the MODFEN bit on the $\overline{SS}$ port pin configuration, refer to Table 21-2. In master mode, a change of this bit will abort a transmission in progress and force the SPI system into idle state. 0 $\overline{SS}$ port pin is not used by the SPI. 1 $\overline{SS}$ port pin with MODF feature.
3 BIDIROE	**Output Enable in the Bidirectional Mode of Operation** — This bit controls the MOSI and MISO output buffer of the SPI, when in bidirectional mode of operation (SPC0 is set). In master mode, this bit controls the output buffer of the MOSI port, in slave mode it controls the output buffer of the MISO port. In master mode, with SPC0 set, a change of this bit will abort a transmission in progress and force the SPI into idle state. 0 Output buffer disabled. 1 Output buffer enabled.
1 SPISWAI	**SPI Stop in Wait Mode Bit** — This bit is used for power conservation while in wait mode. 0 SPI clock operates normally in wait mode. 1 Stop SPI clock generation when in wait mode.
0 SPC0	**Serial Pin Control Bit 0** — This bit enables bidirectional pin configurations as shown in Table 21-4. In master mode, a change of this bit will abort a transmission in progress and force the SPI system into idle state.

[1] n is used later in this document as a placeholder for the selected transfer width.

Table 21-4. Bidirectional Pin Configurations

Pin Mode	SPC0	BIDIROE	MISO	MOSI
Master Mode of Operation				
Normal	0	X	Master In	Master Out
Bidirectional	1	0	MISO not used by SPI	Master In
		1		Master I/O
Slave Mode of Operation				
Normal	0	X	Slave Out	Slave In
Bidirectional	1	0	Slave In	MOSI not used by SPI
		1	Slave I/O	

21.3.2.3 SPI Baud Rate Register (SPIBR)

Module Base +0x0002

	7	6	5	4	3	2	1	0
R	0	SPPR2	SPPR1	SPPR0	0	SPR2	SPR1	SPR0
W								
Reset	0	0	0	0	0	0	0	0

= Unimplemented or Reserved

Figure 21-5. SPI Baud Rate Register (SPIBR)

Read: Anytime

Write: Anytime; writes to the reserved bits have no effect

Table 21-5. SPIBR Field Descriptions

Field	Description
6–4 SPPR[2:0]	**SPI Baud Rate Preselection Bits** — These bits specify the SPI baud rates as shown in Table 21-6. In master mode, a change of these bits will abort a transmission in progress and force the SPI system into idle state.
2–0 SPR[2:0]	**SPI Baud Rate Selection Bits** — These bits specify the SPI baud rates as shown in Table 21-6. In master mode, a change of these bits will abort a transmission in progress and force the SPI system into idle state.

The baud rate divisor equation is as follows:

$$\text{BaudRateDivisor} = (\text{SPPR} + 1) \bullet 2^{(\text{SPR} + 1)} \qquad \textit{Eqn. 21-1}$$

The baud rate can be calculated with the following equation:

$$\text{Baud Rate} = \text{BusClock} / \text{BaudRateDivisor} \qquad \textit{Eqn. 21-2}$$

NOTE

For maximum allowed baud rates, please refer to the SPI Electrical Specification in the Electricals chapter of this data sheet.

Table 21-6. Example SPI Baud Rate Selection (25 MHz Bus Clock)

SPPR2	SPPR1	SPPR0	SPR2	SPR1	SPR0	Baud Rate Divisor	Baud Rate
0	0	0	0	0	0	2	12.5 Mbit/s
0	0	0	0	0	1	4	6.25 Mbit/s
0	0	0	0	1	0	8	3.125 Mbit/s
0	0	0	0	1	1	16	1.5625 Mbit/s
0	0	0	1	0	0	32	781.25 kbit/s
0	0	0	1	0	1	64	390.63 kbit/s
0	0	0	1	1	0	128	195.31 kbit/s
0	0	0	1	1	1	256	97.66 kbit/s
0	0	1	0	0	0	4	6.25 Mbit/s
0	0	1	0	0	1	8	3.125 Mbit/s

Table 21-6. Example SPI Baud Rate Selection (25 MHz Bus Clock)

SPPR2	SPPR1	SPPR0	SPR2	SPR1	SPR0	Baud Rate Divisor	Baud Rate
0	0	1	0	1	0	16	1.5625 Mbit/s
0	0	1	0	1	1	32	781.25 kbit/s
0	0	1	1	0	0	64	390.63 kbit/s
0	0	1	1	0	1	128	195.31 kbit/s
0	0	1	1	1	0	256	97.66 kbit/s
0	0	1	1	1	1	512	48.83 kbit/s
0	1	0	0	0	0	6	4.16667 Mbit/s
0	1	0	0	0	1	12	2.08333 Mbit/s
0	1	0	0	1	0	24	1.04167 Mbit/s
0	1	0	0	1	1	48	520.83 kbit/s
0	1	0	1	0	0	96	260.42 kbit/s
0	1	0	1	0	1	192	130.21 kbit/s
0	1	0	1	1	0	384	65.10 kbit/s
0	1	0	1	1	1	768	32.55 kbit/s
0	1	1	0	0	0	8	3.125 Mbit/s
0	1	1	0	0	1	16	1.5625 Mbit/s
0	1	1	0	1	0	32	781.25 kbit/s
0	1	1	0	1	1	64	390.63 kbit/s
0	1	1	1	0	0	128	195.31 kbit/s
0	1	1	1	0	1	256	97.66 kbit/s
0	1	1	1	1	0	512	48.83 kbit/s
0	1	1	1	1	1	1024	24.41 kbit/s
1	0	0	0	0	0	10	2.5 Mbit/s
1	0	0	0	0	1	20	1.25 Mbit/s
1	0	0	0	1	0	40	625 kbit/s
1	0	0	0	1	1	80	312.5 kbit/s
1	0	0	1	0	0	160	156.25 kbit/s
1	0	0	1	0	1	320	78.13 kbit/s
1	0	0	1	1	0	640	39.06 kbit/s
1	0	0	1	1	1	1280	19.53 kbit/s
1	0	1	0	0	0	12	2.08333 Mbit/s
1	0	1	0	0	1	24	1.04167 Mbit/s
1	0	1	0	1	0	48	520.83 kbit/s
1	0	1	0	1	1	96	260.42 kbit/s
1	0	1	1	0	0	192	130.21 kbit/s
1	0	1	1	0	1	384	65.10 kbit/s
1	0	1	1	1	0	768	32.55 kbit/s
1	0	1	1	1	1	1536	16.28 kbit/s
1	1	0	0	0	0	14	1.78571 Mbit/s

Table 21-6. Example SPI Baud Rate Selection (25 MHz Bus Clock)

SPPR2	SPPR1	SPPR0	SPR2	SPR1	SPR0	Baud Rate Divisor	Baud Rate
1	1	0	0	0	1	28	892.86 kbit/s
1	1	0	0	1	0	56	446.43 kbit/s
1	1	0	0	1	1	112	223.21 kbit/s
1	1	0	1	0	0	224	111.61 kbit/s
1	1	0	1	0	1	448	55.80 kbit/s
1	1	0	1	1	0	896	27.90 kbit/s
1	1	0	1	1	1	1792	13.95 kbit/s
1	1	1	0	0	0	16	1.5625 Mbit/s
1	1	1	0	0	1	32	781.25 kbit/s
1	1	1	0	1	0	64	390.63 kbit/s
1	1	1	0	1	1	128	195.31 kbit/s
1	1	1	1	0	0	256	97.66 kbit/s
1	1	1	1	0	1	512	48.83 kbit/s
1	1	1	1	1	0	1024	24.41 kbit/s
1	1	1	1	1	1	2048	12.21 kbit/s

21.3.2.4 SPI Status Register (SPISR)

Module Base +0x0003

	7	6	5	4	3	2	1	0
R	SPIF	0	SPTEF	MODF	0	0	0	0
W								
Reset	0	0	1	0	0	0	0	0

= Unimplemented or Reserved

Figure 21-6. SPI Status Register (SPISR)

Read: Anytime

Write: Has no effect

Table 21-7. SPISR Field Descriptions

Field	Description
7 SPIF	**SPIF Interrupt Flag** — This bit is set after received data has been transferred into the SPI data register. For information about clearing SPIF Flag, please refer to Table 21-8. 0 Transfer not yet complete. 1 New data copied to SPIDR.

Table 21-7. SPISR Field Descriptions

Field	Description
5 SPTEF	**SPI Transmit Empty Interrupt Flag** — If set, this bit indicates that the transmit data register is empty. For information about clearing this bit and placing data into the transmit data register, please refer to Table 21-9. 0 SPI data register not empty. 1 SPI data register empty.
4 MODF	**Mode Fault Flag** — This bit is set if the $\overline{SS}$ input becomes low while the SPI is configured as a master and mode fault detection is enabled, MODFEN bit of SPICR2 register is set. Refer to MODFEN bit description in Section 21.3.2.2, "SPI Control Register 2 (SPICR2)". The flag is cleared automatically by a read of the SPI status register (with MODF set) followed by a write to the SPI control register 1. 0 Mode fault has not occurred. 1 Mode fault has occurred.

Table 21-8. SPIF Interrupt Flag Clearing Sequence

XFRW Bit	SPIF Interrupt Flag Clearing Sequence		
0	Read SPISR with SPIF == 1	**then**	Read SPIDRL
1	Read SPISR with SPIF == 1	**then**	Byte Read SPIDRL [1]
			or
			Byte Read SPIDRH [2] then Byte Read SPIDRL
			or
			Word Read (SPIDRH:SPIDRL)

1 Data in SPIDRH is lost in this case.

2 SPIDRH can be read repeatedly without any effect on SPIF. SPIF Flag is cleared only by the read of SPIDRL after reading SPISR with SPIF == 1.

Table 21-9. SPTEF Interrupt Flag Clearing Sequence

XFRW Bit	SPTEF Interrupt Flag Clearing Sequence		
0	Read SPISR with SPTEF == 1	**then**	Write to SPIDRL [1]
1	Read SPISR with SPTEF == 1	**then**	Byte Write to SPIDRL [12]
			or
			Byte Write to SPIDRH [13] then Byte Write to SPIDRL [1]
			or
			Word Write to (SPIDRH:SPIDRL) [1]

1 Any write to SPIDRH or SPIDRL with SPTEF == 0 is effectively ignored.

2 Data in SPIDRH is undefined in this case.

[3] SPIDRH can be written repeatedly without any effect on SPTEF. SPTEF Flag is cleared only by writing to SPIDRL after reading SPISR with SPTEF == 1.

21.3.2.5 SPI Data Register (SPIDR = SPIDRH:SPIDRL)

Module Base +0x0004

	7	6	5	4	3	2	1	0
R	R15	R14	R13	R12	R11	R10	R9	R8
W	T15	T14	T13	T12	T11	T10	T9	T8
Reset	0	0	0	0	0	0	0	0

Figure 21-7. SPI Data Register High (SPIDRH)

Module Base +0x0005

	7	6	5	4	3	2	1	0
R	R7	R6	R5	R4	R3	R2	R1	R0
W	T7	T6	T5	T4	T3	T2	T1	T0
Reset	0	0	0	0	0	0	0	0

Figure 21-8. SPI Data Register Low (SPIDRL)

Read: Anytime; read data only valid when SPIF is set

Write: Anytime

The SPI data register is both the input and output register for SPI data. A write to this register allows data to be queued and transmitted. For an SPI configured as a master, queued data is transmitted immediately after the previous transmission has completed. The SPI transmitter empty flag SPTEF in the SPISR register indicates when the SPI data register is ready to accept new data.

Received data in the SPIDR is valid when SPIF is set.

If SPIF is cleared and data has been received, the received data is transferred from the receive shift register to the SPIDR and SPIF is set.

If SPIF is set and not serviced, and a second data value has been received, the second received data is kept as valid data in the receive shift register until the start of another transmission. The data in the SPIDR does not change.

If SPIF is set and valid data is in the receive shift register, and SPIF is serviced before the start of a third transmission, the data in the receive shift register is transferred into the SPIDR and SPIF remains set (see Figure 21-9).

If SPIF is set and valid data is in the receive shift register, and SPIF is serviced after the start of a third transmission, the data in the receive shift register has become invalid and is not transferred into the SPIDR (see Figure 21-10).

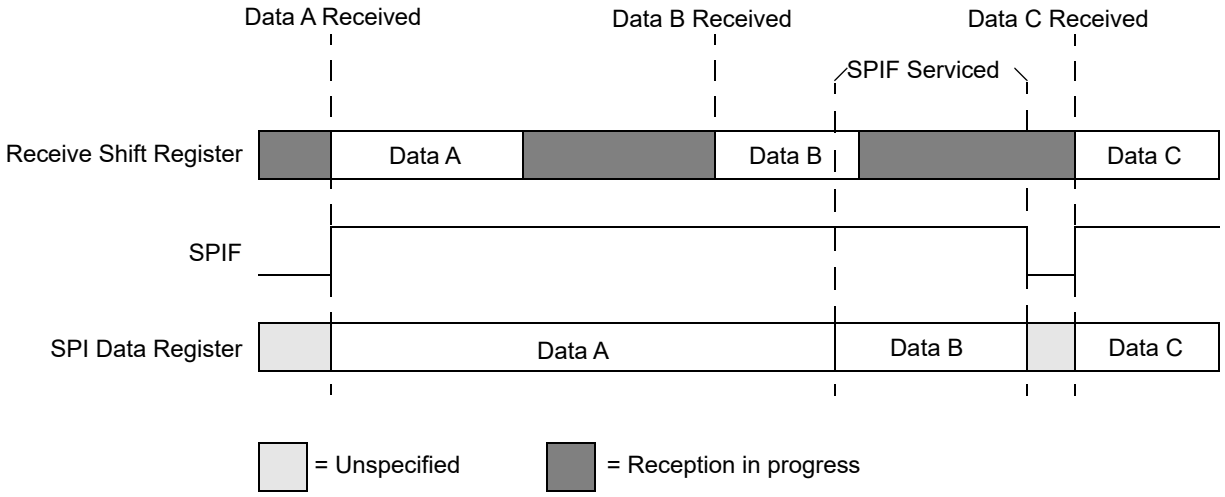

Figure 21-9. Reception with SPIF serviced in Time

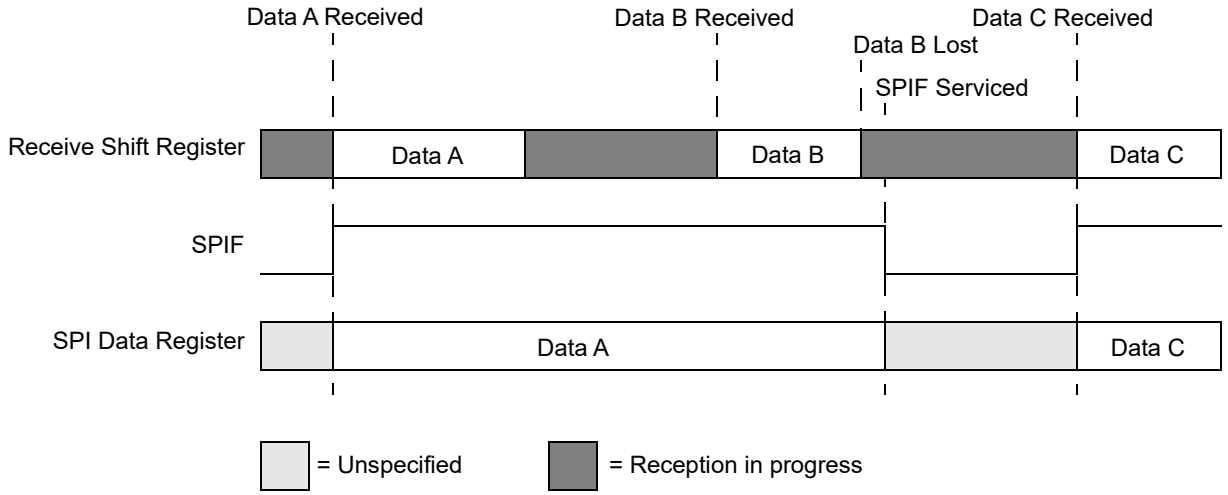

Figure 21-10. Reception with SPIF serviced too late

21.4 Functional Description

The SPI module allows a duplex, synchronous, serial communication between the MCU and peripheral devices. Software can poll the SPI status flags or SPI operation can be interrupt driven.

The SPI system is enabled by setting the SPI enable (SPE) bit in SPI control register 1. While SPE is set, the four associated SPI port pins are dedicated to the SPI function as:

- Slave select ($\overline{SS}$)
- Serial clock (SCK)
- Master out/slave in (MOSI)
- Master in/slave out (MISO)

The main element of the SPI system is the SPI data register. The n-bit[1] data register in the master and the n-bit[1] data register in the slave are linked by the MOSI and MISO pins to form a distributed 2n-bit[1] register. When a data transfer operation is performed, this 2n-bit[1] register is serially shifted n[1] bit positions by the S-clock from the master, so data is exchanged between the master and the slave. Data written to the master SPI data register becomes the output data for the slave, and data read from the master SPI data register after a transfer operation is the input data from the slave.

A read of SPISR with SPTEF = 1 followed by a write to SPIDR puts data into the transmit data register. When a transfer is complete and SPIF is cleared, received data is moved into the receive data register. This data register acts as the SPI receive data register for reads and as the SPI transmit data register for writes. A common SPI data register address is shared for reading data from the read data buffer and for writing data to the transmit data register.

The clock phase control bit (CPHA) and a clock polarity control bit (CPOL) in the SPI control register 1 (SPICR1) select one of four possible clock formats to be used by the SPI system. The CPOL bit simply selects a non-inverted or inverted clock. The CPHA bit is used to accommodate two fundamentally different protocols by sampling data on odd numbered SCK edges or on even numbered SCK edges (see Section 21.4.3, “Transmission Formats”).

The SPI can be configured to operate as a master or as a slave. When the MSTR bit in SPI control register1 is set, master mode is selected, when the MSTR bit is clear, slave mode is selected.

NOTE

A change of CPOL or MSTR bit while there is a received byte pending in the receive shift register will destroy the received byte and must be avoided.

21.4.1 Master Mode

The SPI operates in master mode when the MSTR bit is set. Only a master SPI module can initiate transmissions. A transmission begins by writing to the master SPI data register. If the shift register is empty, data immediately transfers to the shift register. Data begins shifting out on the MOSI pin under the control of the serial clock.

- Serial clock

  The SPR2, SPR1, and SPR0 baud rate selection bits, in conjunction with the SPPR2, SPPR1, and SPPR0 baud rate preselection bits in the SPI baud rate register, control the baud rate generator and determine the speed of the transmission. The SCK pin is the SPI clock output. Through the SCK pin, the baud rate generator of the master controls the shift register of the slave peripheral.
- MOSI, MISO pin

  In master mode, the function of the serial data output pin (MOSI) and the serial data input pin (MISO) is determined by the SPC0 and BIDIROE control bits.
- $\overline{SS}$ pin

  If MODFEN and SSOE are set, the $\overline{SS}$ pin is configured as slave select output. The $\overline{SS}$ output becomes low during each transmission and is high when the SPI is in idle state.

1. n depends on the selected transfer width, please refer to Section 21.3.2.2, “SPI Control Register 2 (SPICR2)

If MODFEN is set and SSOE is cleared, the $\overline{SS}$ pin is configured as input for detecting mode fault error. If the $\overline{SS}$ input becomes low this indicates a mode fault error where another master tries to drive the MOSI and SCK lines. In this case, the SPI immediately switches to slave mode, by clearing the MSTR bit and also disables the slave output buffer MISO (or SISO in bidirectional mode). So the result is that all outputs are disabled and SCK, MOSI, and MISO are inputs. If a transmission is in progress when the mode fault occurs, the transmission is aborted and the SPI is forced into idle state.

This mode fault error also sets the mode fault (MODF) flag in the SPI status register (SPISR). If the SPI interrupt enable bit (SPIE) is set when the MODF flag becomes set, then an SPI interrupt sequence is also requested.

When a write to the SPI data register in the master occurs, there is a half SCK-cycle delay. After the delay, SCK is started within the master. The rest of the transfer operation differs slightly, depending on the clock format specified by the SPI clock phase bit, CPHA, in SPI control register 1 (see Section 21.4.3, “Transmission Formats”).

NOTE

A change of the bits CPOL, CPHA, SSOE, LSBFE, XFRW, MODFEN, SPC0, or BIDIROE with SPC0 set, SPPR2-SPPR0 and SPR2-SPR0 in master mode will abort a transmission in progress and force the SPI into idle state. The remote slave cannot detect this, therefore the master must ensure that the remote slave is returned to idle state.

21.4.2 Slave Mode

The SPI operates in slave mode when the MSTR bit in SPI control register 1 is clear.

- Serial clock

  In slave mode, SCK is the SPI clock input from the master.
- MISO, MOSI pin

  In slave mode, the function of the serial data output pin (MISO) and serial data input pin (MOSI) is determined by the SPC0 bit and BIDIROE bit in SPI control register 2.
- $\overline{SS}$ pin

  The $\overline{SS}$ pin is the slave select input. Before a data transmission occurs, the $\overline{SS}$ pin of the slave SPI must be low. $\overline{SS}$ must remain low until the transmission is complete. If $\overline{SS}$ goes high, the SPI is forced into idle state.

  The $\overline{SS}$ input also controls the serial data output pin, if $\overline{SS}$ is high (not selected), the serial data output pin is high impedance, and, if $\overline{SS}$ is low, the first bit in the SPI data register is driven out of the serial data output pin. Also, if the slave is not selected ($\overline{SS}$ is high), then the SCK input is ignored and no internal shifting of the SPI shift register occurs.

  Although the SPI is capable of duplex operation, some SPI peripherals are capable of only receiving SPI data in a slave mode. For these simpler devices, there is no serial data out pin.

NOTE

When peripherals with duplex capability are used, take care not to simultaneously enable two receivers whose serial outputs drive the same system slave's serial data output line.

As long as no more than one slave device drives the system slave's serial data output line, it is possible for several slaves to receive the same transmission from a master, although the master would not receive return information from all of the receiving slaves.

If the CPHA bit in SPI control register 1 is clear, odd numbered edges on the SCK input cause the data at the serial data input pin to be latched. Even numbered edges cause the value previously latched from the serial data input pin to shift into the LSB or MSB of the SPI shift register, depending on the LSBFE bit.

If the CPHA bit is set, even numbered edges on the SCK input cause the data at the serial data input pin to be latched. Odd numbered edges cause the value previously latched from the serial data input pin to shift into the LSB or MSB of the SPI shift register, depending on the LSBFE bit.

When CPHA is set, the first edge is used to get the first data bit onto the serial data output pin. When CPHA is clear and the $\overline{SS}$ input is low (slave selected), the first bit of the SPI data is driven out of the serial data output pin. After the nth[1] shift, the transfer is considered complete and the received data is transferred into the SPI data register. To indicate transfer is complete, the SPIF flag in the SPI status register is set.

NOTE

A change of the bits CPOL, CPHA, SSOE, LSBFE, MODFEN, SPC0, or BIDIROE with SPC0 set in slave mode will corrupt a transmission in progress and must be avoided.

21.4.3 Transmission Formats

During an SPI transmission, data is transmitted (shifted out serially) and received (shifted in serially) simultaneously. The serial clock (SCK) synchronizes shifting and sampling of the information on the two serial data lines. A slave select line allows selection of an individual slave SPI device; slave devices that are not selected do not interfere with SPI bus activities. Optionally, on a master SPI device, the slave select line can be used to indicate multiple-master bus contention.

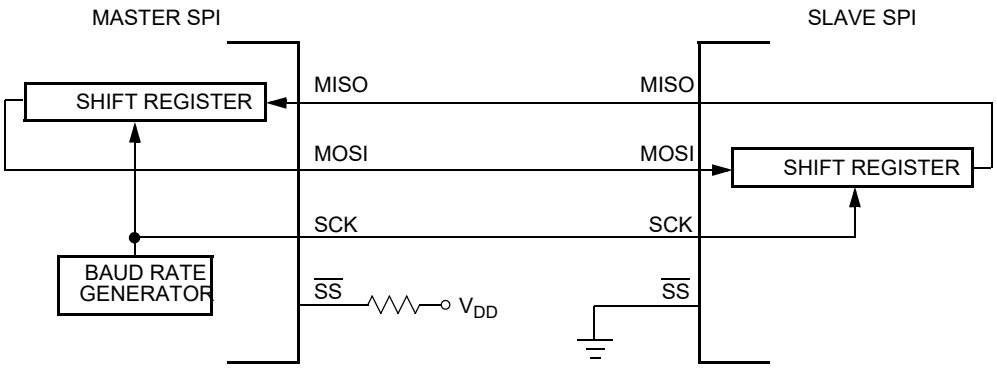

Figure 21-11. Master/Slave Transfer Block Diagram

1. n depends on the selected transfer width, please refer to Section 21.3.2.2, "SPI Control Register 2 (SPICR2)

21.4.3.1 Clock Phase and Polarity Controls

Using two bits in the SPI control register 1, software selects one of four combinations of serial clock phase and polarity.

The CPOL clock polarity control bit specifies an active high or low clock and has no significant effect on the transmission format.

The CPHA clock phase control bit selects one of two fundamentally different transmission formats.

Clock phase and polarity should be identical for the master SPI device and the communicating slave device. In some cases, the phase and polarity are changed between transmissions to allow a master device to communicate with peripheral slaves having different requirements.

21.4.3.2 CPHA = 0 Transfer Format

The first edge on the SCK line is used to clock the first data bit of the slave into the master and the first data bit of the master into the slave. In some peripherals, the first bit of the slave's data is available at the slave's data out pin as soon as the slave is selected. In this format, the first SCK edge is issued a half cycle after $\overline{SS}$ has become low.

A half SCK cycle later, the second edge appears on the SCK line. When this second edge occurs, the value previously latched from the serial data input pin is shifted into the LSB or MSB of the shift register, depending on LSBFE bit.

After this second edge, the next bit of the SPI master data is transmitted out of the serial data output pin of the master to the serial input pin on the slave. This process continues for a total of 16 edges on the SCK line, with data being latched on odd numbered edges and shifted on even numbered edges.

Data reception is double buffered. Data is shifted serially into the SPI shift register during the transfer and is transferred to the parallel SPI data register after the last bit is shifted in.

After $2n^1$ (last) SCK edges:

- Data that was previously in the master SPI data register should now be in the slave data register and the data that was in the slave data register should be in the master.
- The SPIF flag in the SPI status register is set, indicating that the transfer is complete.

Figure 21-12 is a timing diagram of an SPI transfer where CPHA = 0. SCK waveforms are shown for CPOL = 0 and CPOL = 1. The diagram may be interpreted as a master or slave timing diagram because the SCK, MISO, and MOSI pins are connected directly between the master and the slave. The MISO signal is the output from the slave and the MOSI signal is the output from the master. The $\overline{SS}$ pin of the master must be either high or reconfigured as a general-purpose output not affecting the SPI.

1. n depends on the selected transfer width, please refer to Section 21.3.2.2, "SPI Control Register 2 (SPICR2)

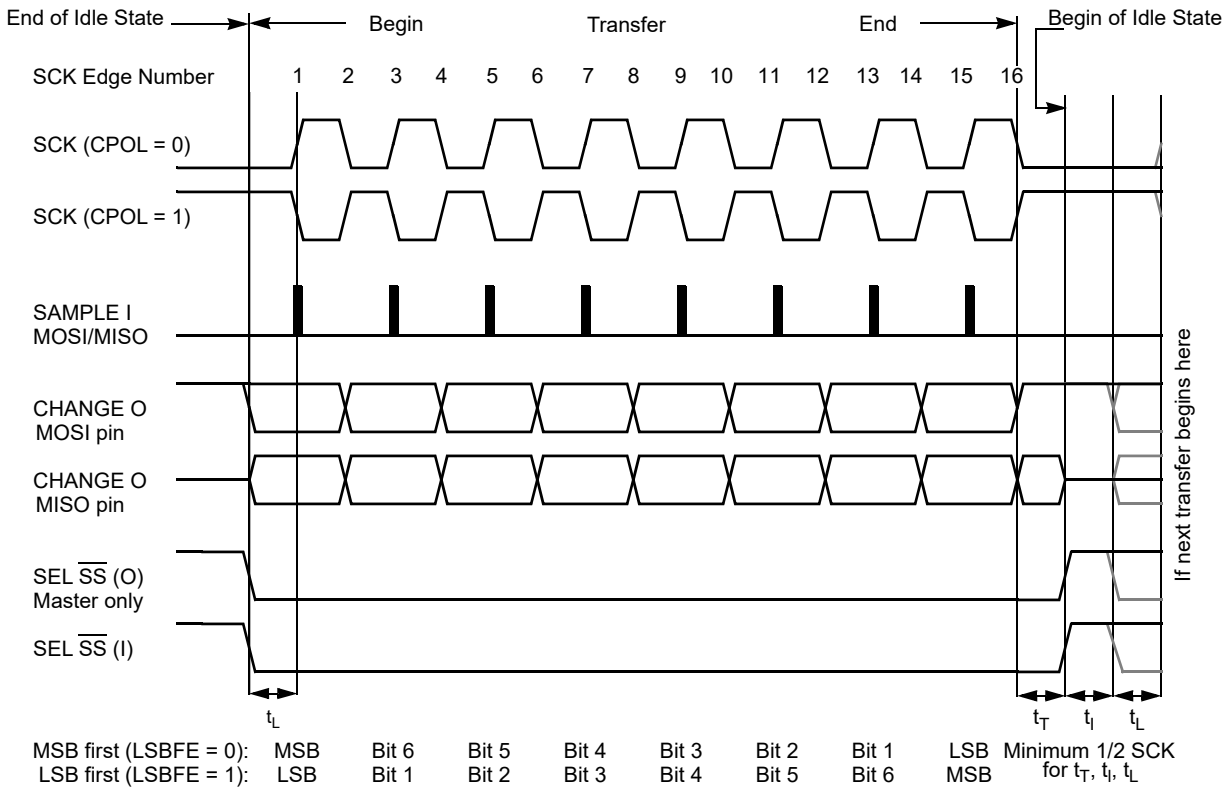

t_L = Minimum leading time before the first SCK edge

t_T = Minimum trailing time after the last SCK edge

t_I = Minimum idling time between transfers (minimum $\overline{SS}$ high time)

t_L, t_T, and t_I are guaranteed for the master mode and required for the slave mode.

Figure 21-12. SPI Clock Format 0 (CPHA = 0), with 8-bit Transfer Width selected (XFRW = 0)

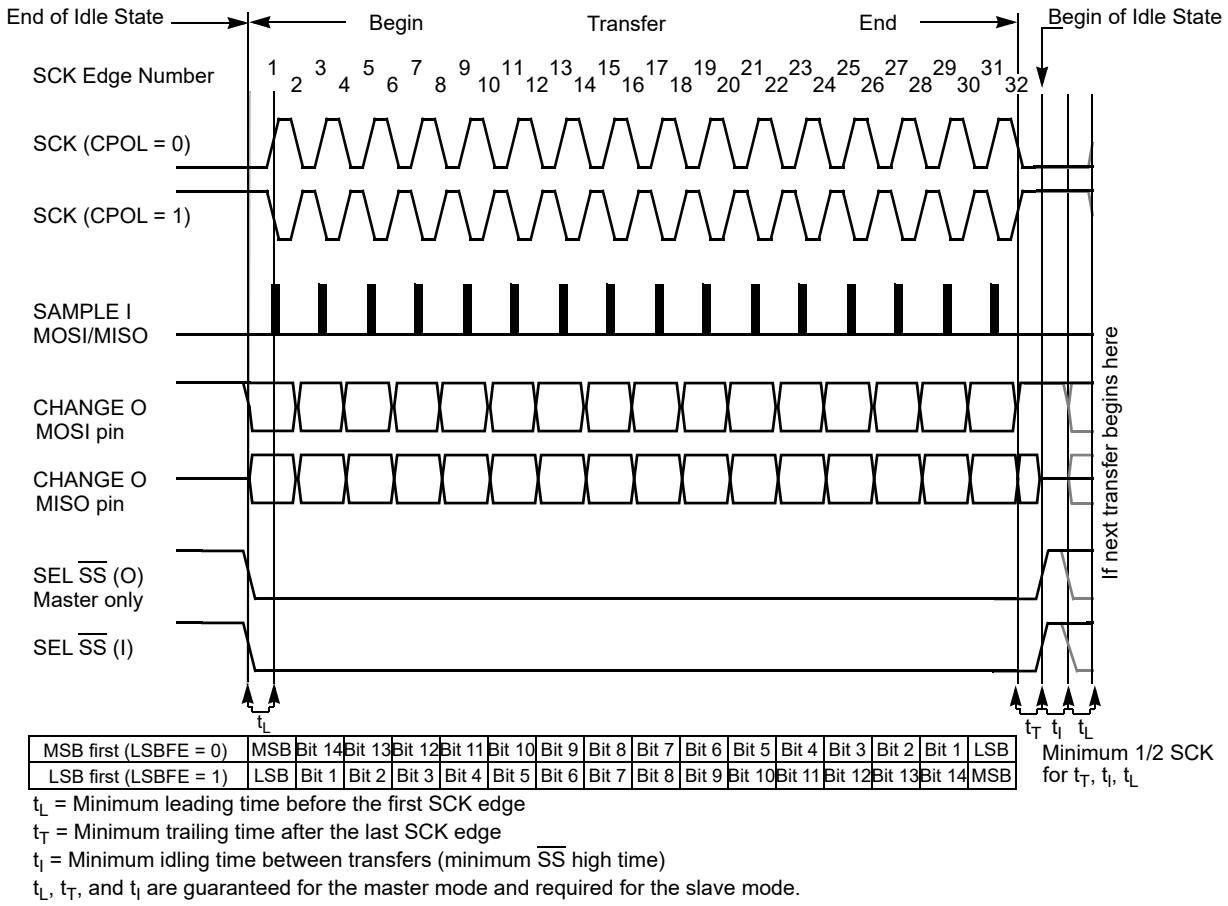

Figure 21-13. SPI Clock Format 0 (CPHA = 0), with 16-Bit Transfer Width selected (XFRW = 1)

In slave mode, if the $\overline{SS}$ line is not deasserted between the successive transmissions then the content of the SPI data register is not transmitted; instead the last received data is transmitted. If the $\overline{SS}$ line is deasserted for at least minimum idle time (half SCK cycle) between successive transmissions, then the content of the SPI data register is transmitted.

In master mode, with slave select output enabled the $\overline{SS}$ line is always deasserted and reasserted between successive transfers for at least minimum idle time.

21.4.3.3 CPHA = 1 Transfer Format

Some peripherals require the first SCK edge before the first data bit becomes available at the data out pin, the second edge clocks data into the system. In this format, the first SCK edge is issued by setting the CPHA bit at the beginning of the n[1]-cycle transfer operation.

The first edge of SCK occurs immediately after the half SCK clock cycle synchronization delay. This first edge commands the slave to transfer its first data bit to the serial data input pin of the master.

1. n depends on the selected transfer width, please refer to Section 21.3.2.2, “SPI Control Register 2 (SPICR2)

A half SCK cycle later, the second edge appears on the SCK pin. This is the latching edge for both the master and slave.

When the third edge occurs, the value previously latched from the serial data input pin is shifted into the LSB or MSB of the SPI shift register, depending on LSBFE bit. After this edge, the next bit of the master data is coupled out of the serial data output pin of the master to the serial input pin on the slave.

This process continues for a total of n^1 edges on the SCK line with data being latched on even numbered edges and shifting taking place on odd numbered edges.

Data reception is double buffered, data is serially shifted into the SPI shift register during the transfer and is transferred to the parallel SPI data register after the last bit is shifted in.

After $2n^1$ SCK edges:

- Data that was previously in the SPI data register of the master is now in the data register of the slave, and data that was in the data register of the slave is in the master.
- The SPIF flag bit in SPISR is set indicating that the transfer is complete.

Figure 21-14 shows two clocking variations for CPHA = 1. The diagram may be interpreted as a master or slave timing diagram because the SCK, MISO, and MOSI pins are connected directly between the master and the slave. The MISO signal is the output from the slave, and the MOSI signal is the output from the master. The $\overline{SS}$ line is the slave select input to the slave. The $\overline{SS}$ pin of the master must be either high or reconfigured as a general-purpose output not affecting the SPI.

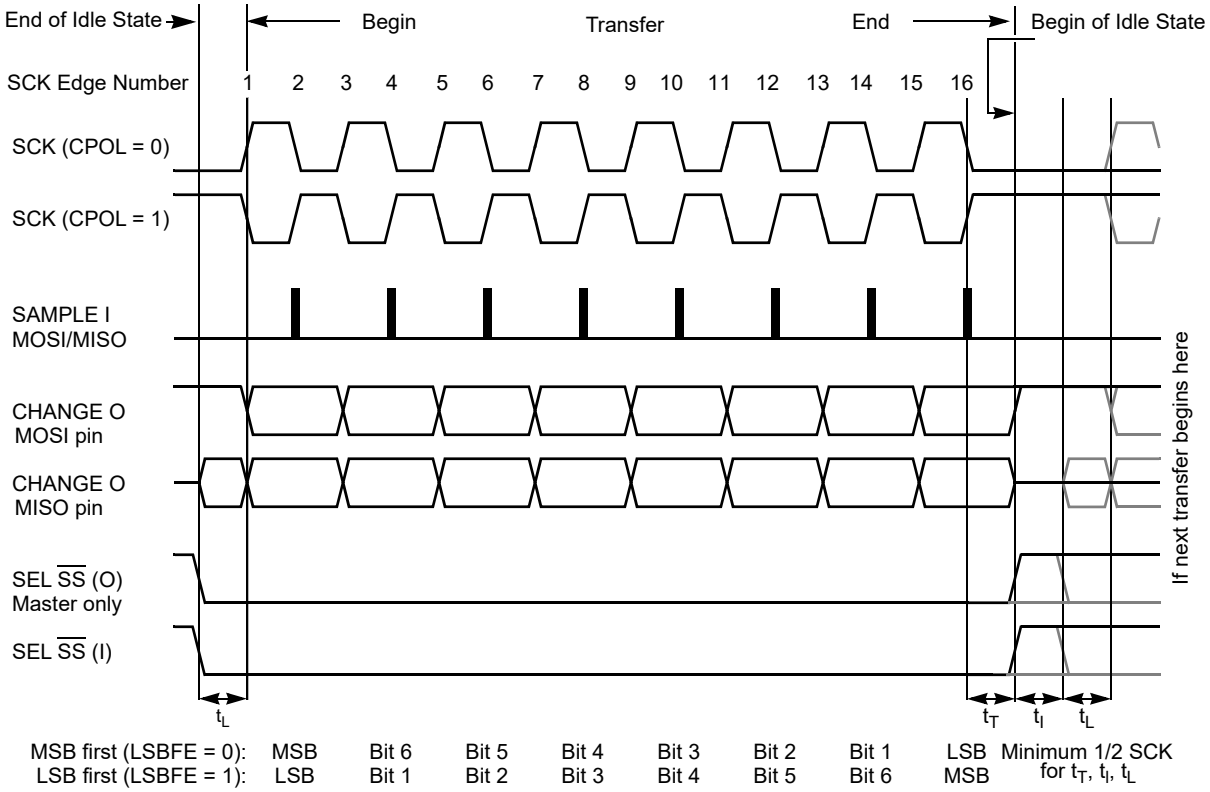

t_L = Minimum leading time before the first SCK edge, not required for back-to-back transfers

t_T = Minimum trailing time after the last SCK edge

t_I = Minimum idling time between transfers (minimum $\overline{SS}$ high time), not required for back-to-back transfers

Figure 21-14. SPI Clock Format 1 (CPHA = 1), with 8-Bit Transfer Width selected (XFRW = 0)

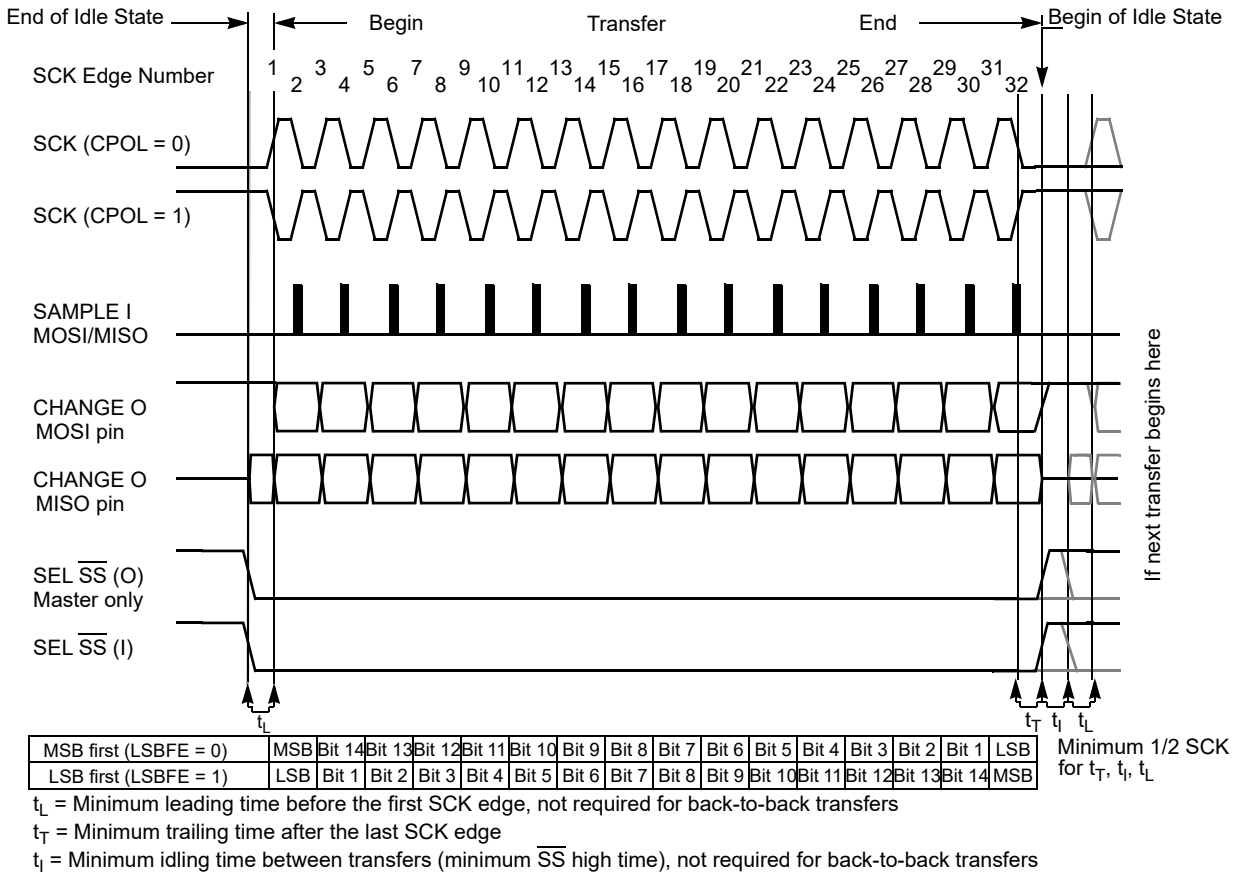

Figure 21-15. SPI Clock Format 1 (CPHA = 1), with 16-Bit Transfer Width selected (XFRW = 1)

The $\overline{SS}$ line can remain active low between successive transfers (can be tied low at all times). This format is sometimes preferred in systems having a single fixed master and a single slave that drive the MISO data line.

- Back-to-back transfers in master mode

  In master mode, if a transmission has completed and new data is available in the SPI data register, this data is sent out immediately without a trailing and minimum idle time.

The SPI interrupt request flag (SPIF) is common to both the master and slave modes. SPIF gets set one half SCK cycle after the last SCK edge.

21.4.4 SPI Baud Rate Generation

Baud rate generation consists of a series of divider stages. Six bits in the SPI baud rate register (SPPR2, SPPR1, SPPR0, SPR2, SPR1, and SPR0) determine the divisor to the SPI module clock which results in the SPI baud rate.

The SPI clock rate is determined by the product of the value in the baud rate preselection bits (SPPR2–SPPR0) and the value in the baud rate selection bits (SPR2–SPR0). The module clock divisor equation is shown in Equation 21-3.

$$\text{BaudRateDivisor} = (\text{SPPR} + 1) \bullet 2^{(\text{SPR} + 1)} \qquad \textit{Eqn. 21-3}$$

When all bits are clear (the default condition), the SPI module clock is divided by 2. When the selection bits (SPR2–SPR0) are 001 and the preselection bits (SPPR2–SPPR0) are 000, the module clock divisor becomes 4. When the selection bits are 010, the module clock divisor becomes 8, etc.

When the preselection bits are 001, the divisor determined by the selection bits is multiplied by 2. When the preselection bits are 010, the divisor is multiplied by 3, etc. See Table 21-6 for baud rate calculations for all bit conditions, based on a 25 MHz bus clock. The two sets of selects allows the clock to be divided by a non-power of two to achieve other baud rates such as divide by 6, divide by 10, etc.

The baud rate generator is activated only when the SPI is in master mode and a serial transfer is taking place. In the other cases, the divider is disabled to decrease I_{DD} current.

NOTE

For maximum allowed baud rates, please refer to the SPI Electrical Specification in the Electricals chapter of this data sheet.

21.4.5 Special Features

21.4.5.1 $\overline{SS}$ Output

The $\overline{SS}$ output feature automatically drives the $\overline{SS}$ pin low during transmission to select external devices and drives it high during idle to deselect external devices. When $\overline{SS}$ output is selected, the $\overline{SS}$ output pin is connected to the $\overline{SS}$ input pin of the external device.

The $\overline{SS}$ output is available only in master mode during normal SPI operation by asserting SSOE and MODFEN bit as shown in Table 21-2.

The mode fault feature is disabled while $\overline{SS}$ output is enabled.

NOTE

Care must be taken when using the $\overline{SS}$ output feature in a multimaster system because the mode fault feature is not available for detecting system errors between masters.

21.4.5.2 Bidirectional Mode (MOMI or SISO)

The bidirectional mode is selected when the SPC0 bit is set in SPI control register 2 (see Table 21-10). In this mode, the SPI uses only one serial data pin for the interface with external device(s). The MSTR bit decides which pin to use. The MOSI pin becomes the serial data I/O (MOMI) pin for the master mode, and the MISO pin becomes serial data I/O (SISO) pin for the slave mode. The MISO pin in master mode and MOSI pin in slave mode are not used by the SPI.

Table 21-10. Normal Mode and Bidirectional Mode

When SPE = 1	Master Mode MSTR = 1	Slave Mode MSTR = 0
Normal Mode SPC0 = 0	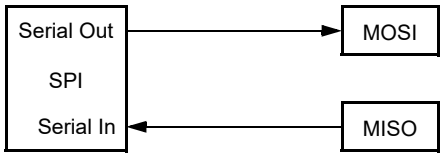	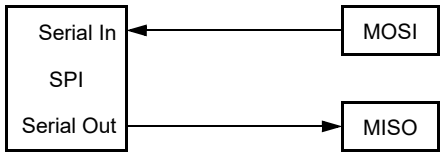
Bidirectional Mode SPC0 = 1	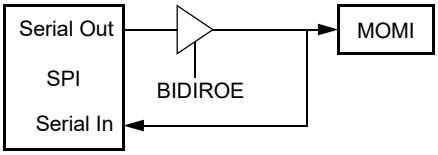	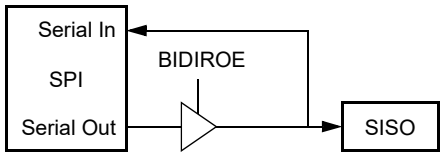

The direction of each serial I/O pin depends on the BIDIROE bit. If the pin is configured as an output, serial data from the shift register is driven out on the pin. The same pin is also the serial input to the shift register.

- The SCK is output for the master mode and input for the slave mode.
- The $\overline{SS}$ is the input or output for the master mode, and it is always the input for the slave mode.
- The bidirectional mode does not affect SCK and $\overline{SS}$ functions.

NOTE

In bidirectional master mode, with mode fault enabled, both data pins MISO and MOSI can be occupied by the SPI, though MOSI is normally used for transmissions in bidirectional mode and MISO is not used by the SPI. If a mode fault occurs, the SPI is automatically switched to slave mode. In this case MISO becomes occupied by the SPI and MOSI is not used. This must be considered, if the MISO pin is used for another purpose.

21.4.6 Error Conditions

The SPI has one error condition:

- Mode fault error

21.4.6.1 Mode Fault Error

If the $\overline{SS}$ input becomes low while the SPI is configured as a master, it indicates a system error where more than one master may be trying to drive the MOSI and SCK lines simultaneously. This condition is not permitted in normal operation, the MODF bit in the SPI status register is set automatically, provided the MODFEN bit is set.

In the special case where the SPI is in master mode and MODFEN bit is cleared, the $\overline{SS}$ pin is not used by the SPI. In this special case, the mode fault error function is inhibited and MODF remains cleared. In case

the SPI system is configured as a slave, the $\overline{SS}$ pin is a dedicated input pin. Mode fault error doesn't occur in slave mode.

If a mode fault error occurs, the SPI is switched to slave mode, with the exception that the slave output buffer is disabled. So SCK, MISO, and MOSI pins are forced to be high impedance inputs to avoid any possibility of conflict with another output driver. A transmission in progress is aborted and the SPI is forced into idle state.

If the mode fault error occurs in the bidirectional mode for a SPI system configured in master mode, output enable of the MOMI (MOSI in bidirectional mode) is cleared if it was set. No mode fault error occurs in the bidirectional mode for SPI system configured in slave mode.

The mode fault flag is cleared automatically by a read of the SPI status register (with MODF set) followed by a write to SPI control register 1. If the mode fault flag is cleared, the SPI becomes a normal master or slave again.

NOTE

If a mode fault error occurs and a received data byte is pending in the receive shift register, this data byte will be lost.

21.4.7 Low Power Mode Options

21.4.7.1 SPI in Run Mode

In run mode with the SPI system enable (SPE) bit in the SPI control register clear, the SPI system is in a low-power, disabled state. SPI registers remain accessible, but clocks to the core of this module are disabled.

21.4.7.2 SPI in Wait Mode

SPI operation in wait mode depends upon the state of the SPISWAI bit in SPI control register 2.

- If SPISWAI is clear, the SPI operates normally when the CPU is in wait mode
- If SPISWAI is set, SPI clock generation ceases and the SPI module enters a power conservation state when the CPU is in wait mode.
  - If SPISWAI is set and the SPI is configured for master, any transmission and reception in progress stops at wait mode entry. The transmission and reception resumes when the SPI exits wait mode.
  - If SPISWAI is set and the SPI is configured as a slave, any transmission and reception in progress continues if the SCK continues to be driven from the master. This keeps the slave synchronized to the master and the SCK.

    If the master transmits several bytes while the slave is in wait mode, the slave will continue to send out bytes consistent with the operation mode at the start of wait mode (i.e., if the slave is currently sending its SPIDR to the master, it will continue to send the same byte. Else if the slave is currently sending the last received byte from the master, it will continue to send each previous master byte).

NOTE

Care must be taken when expecting data from a master while the slave is in wait or stop mode. Even though the shift register will continue to operate, the rest of the SPI is shut down (i.e., a SPIF interrupt will **not** be generated until exiting stop or wait mode). Also, the byte from the shift register will not be copied into the SPIDR register until after the slave SPI has exited wait or stop mode. In slave mode, a received byte pending in the receive shift register will be lost when entering wait or stop mode. An SPIF flag and SPIDR copy is generated only if wait mode is entered or exited during a tranmission. If the slave enters wait mode in idle mode and exits wait mode in idle mode, neither a SPIF nor a SPIDR copy will occur.

21.4.7.3 SPI in Stop Mode

Stop mode is dependent on the system. The SPI enters stop mode when the module clock is disabled (held high or low). If the SPI is in master mode and exchanging data when the CPU enters stop mode, the transmission is frozen until the CPU exits stop mode. After stop, data to and from the external SPI is exchanged correctly. In slave mode, the SPI will stay synchronized with the master.

The stop mode is not dependent on the SPISWAI bit.

21.4.7.4 Reset

The reset values of registers and signals are described in Section 21.3, “Memory Map and Register Definition”, which details the registers and their bit fields.

- If a data transmission occurs in slave mode after reset without a write to SPIDR, it will transmit garbage, or the data last received from the master before the reset.
- Reading from the SPIDR after reset will always read zeros.

21.4.7.5 Interrupts

The SPI only originates interrupt requests when SPI is enabled (SPE bit in SPICR1 set). The following is a description of how the SPI makes a request and how the MCU should acknowledge that request. The interrupt vector offset and interrupt priority are chip dependent.

The interrupt flags MODF, SPIF, and SPTEF are logically ORed to generate an interrupt request.

21.4.7.5.1 MODF

MODF occurs when the master detects an error on the $\overline{SS}$ pin. The master SPI must be configured for the MODF feature (see Table 21-2). After MODF is set, the current transfer is aborted and the following bit is changed:

- MSTR = 0, The master bit in SPICR1 resets.

The MODF interrupt is reflected in the status register MODF flag. Clearing the flag will also clear the interrupt. This interrupt will stay active while the MODF flag is set. MODF has an automatic clearing process which is described in Section 21.3.2.4, “SPI Status Register (SPISR)”.

21.4.7.5.2 SPIF

SPIF occurs when new data has been received and copied to the SPI data register. After SPIF is set, it does not clear until it is serviced. SPIF has an automatic clearing process, which is described in Section 21.3.2.4, “SPI Status Register (SPISR)”.

21.4.7.5.3 SPTEF

SPTEF occurs when the SPI data register is ready to accept new data. After SPTEF is set, it does not clear until it is serviced. SPTEF has an automatic clearing process, which is described in Section 21.3.2.4, “SPI Status Register (SPISR)”.

Chapter 22
Timer Module (TIM16B6CV3)

Table 22-1. Revision History

V03.00	Jan. 28, 2009		Initial version
V03.01	Aug. 26, 2009	22.1.2/22-720 22.3.2.2/22-723, 22.4.3/22-735	- Correct typo: TSCR ->TSCR1; - Correct typo: ECTxxx->TIMxxx - Add description, “a counter overflow when TTOV[7] is set”, to be the condition of channel 7 override event. - Phrase the description of OC7M to make it more explicit
V03.02	Apri,12,2010	22.3.2.6/22-726 22.3.2.9/22-728 22.4.3/22-735	-update TCRE bit description
V03.03	Jan,14,2013		-single source generate different channel guide

22.1 Introduction

The basic scalable timer consists of a 16-bit, software-programmable counter driven by a flexible programmable prescaler.

This timer can be used for many purposes, including input waveform measurements while simultaneously generating an output waveform.

This timer could contain up to 6 input capture/output compare channels . The input capture function is used to detect a selected transition edge and record the time. The output compare function is used for generating output signals or for timer software delays.

A full access for the counter registers or the input capture/output compare registers should take place in one clock cycle. Accessing high byte and low byte separately for all of these registers may not yield the same result as accessing them in one word.

22.1.1 Features

The TIM16B6CV3 includes these distinctive features:

- Up to 6 channels available. (refer to device specification for exact number)
- All channels have same input capture/output compare functionality.
- Clock prescaling.
- 16-bit counter.

22.1.2 Modes of Operation

Stop: Timer is off because clocks are stopped.

Freeze: Timer counter keeps on running, unless TSFRZ in TSCR1 is set to 1.

Wait: Counters keeps on running, unless TSWAI in TSCR1 is set to 1.

Normal: Timer counter keep on running, unless TEN in TSCR1 is cleared to 0.

22.1.3 Block Diagrams

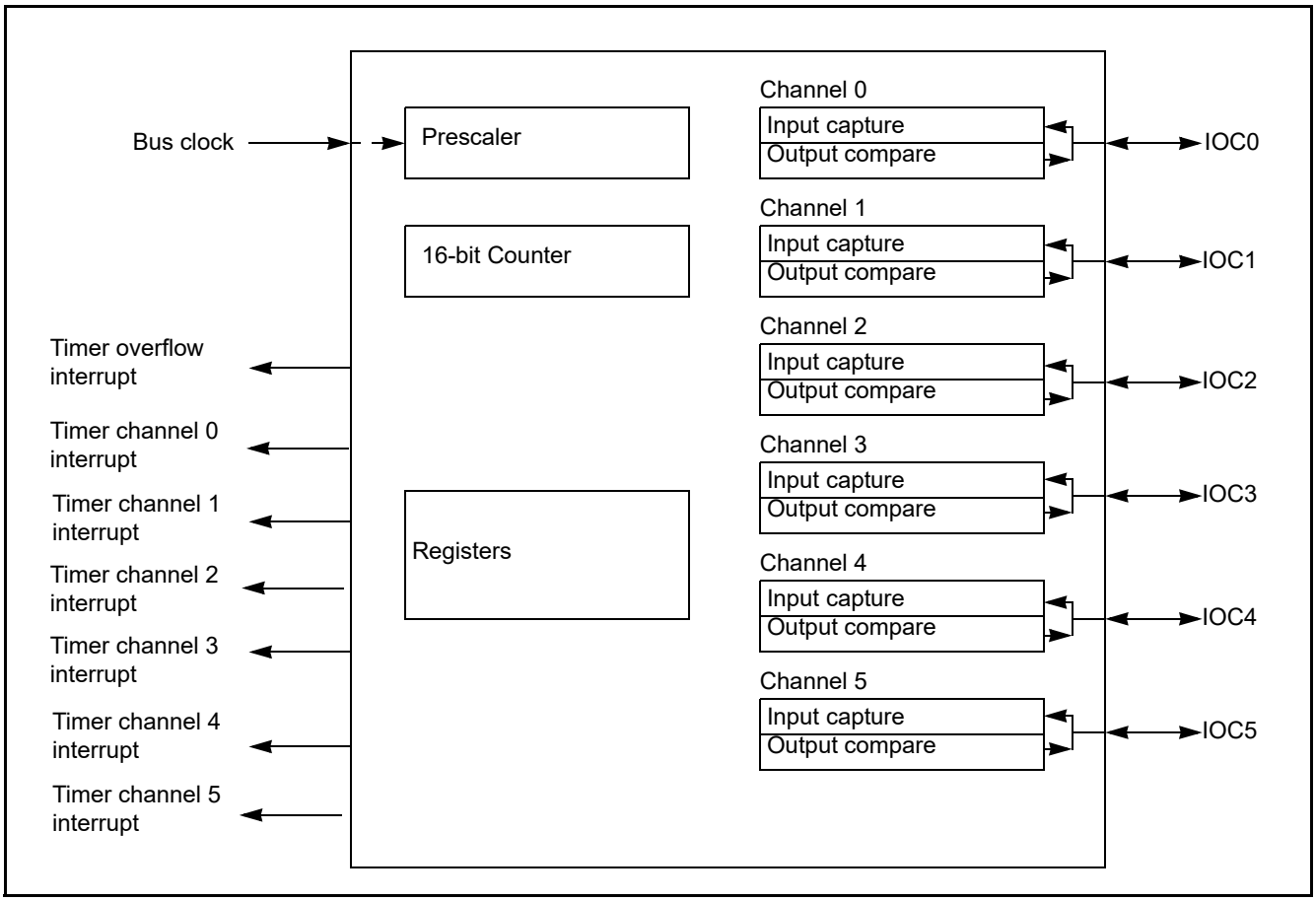

Figure 22-1. TIM16B6CV3 Block Diagram

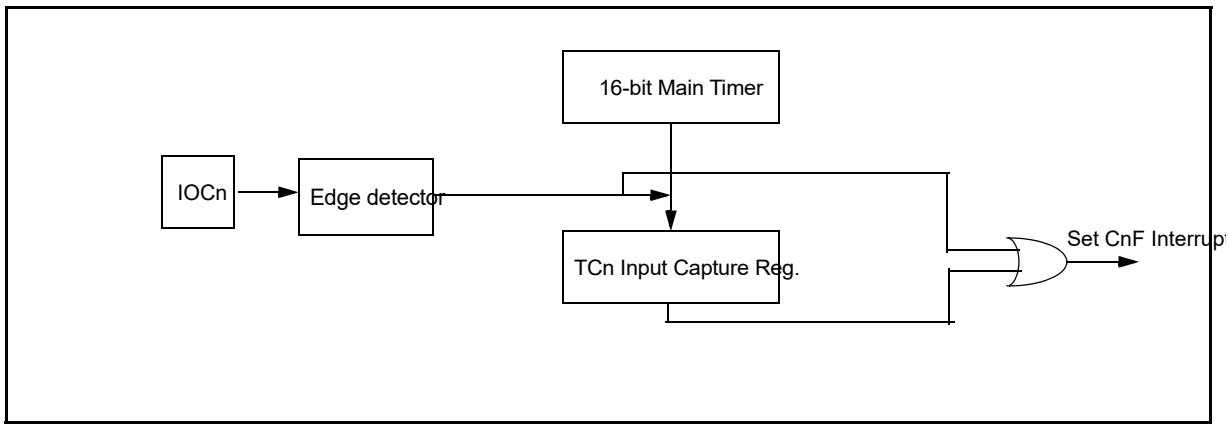

Figure 22-2. Interrupt Flag Setting

22.2 External Signal Description

The TIM16B6CV3 module has a selected number of external pins. Refer to device specification for exact number.

22.2.1 IOC5 - IOC0 — Input Capture and Output Compare Channel 5-0

Those pins serve as input capture or output compare for TIM16B6CV3 channel .

NOTE

For the description of interrupts see Section 22.6, “Interrupts”.

22.3 Memory Map and Register Definition

This section provides a detailed description of all memory and registers.

22.3.1 Module Memory Map

The memory map for the TIM16B6CV3 module is given below in Figure 22-3. The address listed for each register is the address offset. The total address for each register is the sum of the base address for the TIM16B6CV3 module and the address offset for each register.

22.3.2 Register Descriptions

This section consists of register descriptions in address order. Each description includes a standard register diagram with an associated figure number. Details of register bit and field function follow the register diagrams, in bit order.

Only bits related to implemented channels are valid.

Register Name		Bit 7	6	5	4	3	2	1	Bit 0
0x0000 TIOS	R	RESERVED	RESERVED	IOS5	IOS4	IOS3	IOS2	IOS1	IOS0
	W								
0x0001 CFORC	R	0	0	0	0	0	0	0	0
	W	RESERVED	RESERVED	FOC5	FOC4	FOC3	FOC2	FOC1	FOC0
0x0004 TCNTH	R	TCNT15	TCNT14	TCNT13	TCNT12	TCNT11	TCNT10	TCNT9	TCNT8
	W								
0x0005 TCNTL	R	TCNT7	TCNT6	TCNT5	TCNT4	TCNT3	TCNT2	TCNT1	TCNT0
	W								
0x0006 TSCR1	R	TEN	TSWAI	TSFRZ	TFFCA	PRNT	0	0	0
	W								
0x0007 TTOV	R	RESERVED	RESERVED	TOV5	TOV4	TOV3	TOV2	TOV1	TOV0
	W								
0x0008 TCTL1	R	RESERVED	RESERVED	RESERVED	RESERVED	OM5	OL5	OM4	OL4
	W								
0x0009 TCTL2	R	OM3	OL3	OM2	OL2	OM1	OL1	OM0	OL0
	W								
0x000A TCTL3	R	RESERVED	RESERVED	RESERVED	RESERVED	EDG5B	EDG5A	EDG4B	EDG4A
	W								
0x000B TCTL4	R	EDG3B	EDG3A	EDG2B	EDG2A	EDG1B	EDG1A	EDG0B	EDG0A
	W								
0x000C TIE	R	RESERVED	RESERVED	C5I	C4I	C3I	C2I	C1I	C0I
	W								
0x000D TSCR2	R	TOI	0	0	0	RESERVED	PR2	PR1	PR0
	W								
0x000E TFLG1	R	RESERVED	RESERVED	C5F	C4F	C3F	C2F	C1F	C0F
	W								
0x000F TFLG2	R	TOF	0	0	0	0	0	0	0
	W								
0x0010–0x001F TCxH–TCxL[1]	R	Bit 15	Bit 14	Bit 13	Bit 12	Bit 11	Bit 10	Bit 9	Bit 8
	W								
	R	Bit 7	Bit 6	Bit 5	Bit 4	Bit 3	Bit 2	Bit 1	Bit 0
	W								
0x0024–0x002B Reserved	R								
	W								
0x002C OCPD	R	RESERVED	RESERVED	OCPD5	OCPD4	OCPD3	OCPD2	OCPD1	OCPD0
	W								
0x002D Reserved	R								
0x002E PTPSR	R	PTPS7	PTPS6	PTPS5	PTPS4	PTPS3	PTPS2	PTPS1	PTPS0
	W								
0x002F Reserved	R								
	W								

Figure 22-3. TIM16B6CV3 Register Summary

[1] The register is available only if corresponding channel exists.

22.3.2.1 Timer Input Capture/Output Compare Select (TIOS)

Module Base + 0x0000

	7	6	5	4	3	2	1	0
R W	RESERVED	RESERVED	IOS5	IOS4	IOS3	IOS2	IOS1	IOS0
Reset	0	0	0	0	0	0	0	0

Figure 22-4. Timer Input Capture/Output Compare Select (TIOS)

Read: Anytime

Write: Anytime

Table 22-2. TIOS Field Descriptions

Note: Writing to unavailable bits has no effect. Reading from unavailable bits return a zero.

Field	Description
5:0 IOS[5:0]	Input Capture or Output Compare Channel Configuration 0 The corresponding implemented channel acts as an input capture. 1 The corresponding implemented channel acts as an output compare.

22.3.2.2 Timer Compare Force Register (CFORC)

Module Base + 0x0001

	7	6	5	4	3	2	1	0
R	0	0	0	0	0	0	0	0
W	RESERVED	RESERVED	FOC5	FOC4	FOC3	FOC2	FOC1	FOC0
Reset	0	0	0	0	0	0	0	0

Figure 22-5. Timer Compare Force Register (CFORC)

Read: Anytime but will always return 0x0000 (1 state is transient)

Write: Anytime

Table 22-3. CFORC Field Descriptions

Note: Writing to unavailable bits has no effect. Reading from unavailable bits return a zero.

Field	Description
5:0 FOC[5:0]	**Note: Force Output Compare Action for Channel 5:0** — A write to this register with the corresponding data bit(s) set causes the action which is programmed for output compare “x” to occur immediately. The action taken is the same as if a successful comparison had just taken place with the TCx register except the interrupt flag does not get set. If forced output compare on any channel occurs at the same time as the successful output compare then forced output compare action will take precedence and interrupt flag won’t get set.

22.3.2.3 Timer Count Register (TCNT)

Module Base + 0x0004

	15	14	13	12	11	10	9	9
R W	TCNT15	TCNT14	TCNT13	TCNT12	TCNT11	TCNT10	TCNT9	TCNT8
Reset	0	0	0	0	0	0	0	0

Figure 22-6. Timer Count Register High (TCNTH)

Module Base + 0x0005

	7	6	5	4	3	2	1	0
R W	TCNT7	TCNT6	TCNT5	TCNT4	TCNT3	TCNT2	TCNT1	TCNT0
Reset	0	0	0	0	0	0	0	0

Figure 22-7. Timer Count Register Low (TCNTL)

The 16-bit main timer is an up counter.

A full access for the counter register should take place in one clock cycle. A separate read/write for high byte and low byte will give a different result than accessing them as a word.

Read: Anytime

Write: Has no meaning or effect in the normal mode; only writable in special modes (test_mode = 1).

The period of the first count after a write to the TCNT registers may be a different size because the write is not synchronized with the prescaler clock.

22.3.2.4 Timer System Control Register 1 (TSCR1)

Module Base + 0x0006

	7	6	5	4	3	2	1	0
R	TEN	TSWAI	TSFRZ	TFFCA	PRNT	0	0	0
W								
Reset	0	0	0	0	0	0	0	0

= Unimplemented or Reserved

Figure 22-8. Timer System Control Register 1 (TSCR1)

Read: Anytime

Write: Anytime

Table 22-4. TSCR1 Field Descriptions

Field	Description
7 TEN	Timer Enable 0 Disables the main timer, including the counter. Can be used for reducing power consumption. 1 Allows the timer to function normally. If for any reason the timer is not active, there is no ÷64 clock for the pulse accumulator because the ÷64 is generated by the timer prescaler.
6 TSWAI	Timer Module Stops While in Wait 0 Allows the timer module to continue running during wait. 1 Disables the timer module when the MCU is in the wait mode. Timer interrupts cannot be used to get the MCU out of wait. TSWAI also affects pulse accumulator.
5 TSFRZ	Timer Stops While in Freeze Mode 0 Allows the timer counter to continue running while in freeze mode. 1 Disables the timer counter whenever the MCU is in freeze mode. This is useful for emulation. TSFRZ does not stop the pulse accumulator.
4 TFFCA	Timer Fast Flag Clear All 0 Allows the timer flag clearing to function normally. 1 For TFLG1(0x000E), a read from an input capture or a write to the output compare channel (0x0010–0x001F) causes the corresponding channel flag, CnF, to be cleared. For TFLG2 (0x000F), any access to the TCNT register (0x0004, 0x0005) clears the TOF flag. This has the advantage of eliminating software overhead in a separate clear sequence. Extra care is required to avoid accidental flag clearing due to unintended accesses.
3 PRNT	Precision Timer 0 Enables legacy timer. PR0, PR1, and PR2 bits of the TSCR2 register are used for timer counter prescaler selection. 1 Enables precision timer. All bits of the PTPSR register are used for Precision Timer Prescaler Selection, and all bits. This bit is writable only once out of reset.

22.3.2.5 Timer Toggle On Overflow Register 1 (TTOV)

Module Base + 0x0007

	7	6	5	4	3	2	1	0
R W	RESERVED	RESERVED	TOV5	TOV4	TOV3	TOV2	TOV1	TOV0
Reset	0	0	0	0	0	0	0	0

Figure 22-9. Timer Toggle On Overflow Register 1 (TTOV)

Read: Anytime

Write: Anytime

Table 22-5. TTOV Field Descriptions

Note: Writing to unavailable bits has no effect. Reading from unavailable bits return a zero.

Field	Description
5:0 TOV[5:0]	**Toggle On Overflow Bits** — TOVx toggles output compare pin on overflow. This feature only takes effect when in output compare mode. When set, it takes precedence over forced output compare 0 Toggle output compare pin on overflow feature disabled. 1 Toggle output compare pin on overflow feature enabled.

22.3.2.6 Timer Control Register 1/Timer Control Register 2 (TCTL1/TCTL2)

Module Base + 0x0008

	7	6	5	4	3	2	1	0
R W	RESERVED	RESERVED	RESERVED	RESERVED	OM5	OL5	OM4	OL4
Reset	0	0	0	0	0	0	0	0

Figure 22-10. Timer Control Register 1 (TCTL1)

Module Base + 0x0009

	7	6	5	4	3	2	1	0
R W	OM3	OL3	OM2	OL2	OM1	OL1	OM0	OL0
Reset	0	0	0	0	0	0	0	0

Figure 22-11. Timer Control Register 2 (TCTL2)

Read: Anytime

Write: Anytime

Table 22-6. TCTL1/TCTL2 Field Descriptions

Note: Writing to unavailable bits has no effect. Reading from unavailable bits return a zero

Field	Description
5:0 OMx	**Output Mode** — These six pairs of control bits are encoded to specify the output action to be taken as a result of a successful OCx compare. When either OMx or OLx is 1, the pin associated with OCx becomes an output tied to OCx. **Note:** For an output line to be driven by an OCx the OCPDx must be cleared.
5:0 OLx	**Output Level** — These sixpairs of control bits are encoded to specify the output action to be taken as a result of a successful OCx compare. When either OMx or OLx is 1, the pin associated with OCx becomes an output tied to OCx. **Note:** For an output line to be driven by an OCx the OCPDx must be cleared.

Table 22-7. Compare Result Output Action

OMx	OLx	Action
0	0	No output compare action on the timer output signal
0	1	Toggle OCx output line
1	0	Clear OCx output line to zero
1	1	Set OCx output line to one

22.3.2.7 Timer Control Register 3/Timer Control Register 4 (TCTL3 and TCTL4)

Module Base + 0x000A

	7	6	5	4	3	2	1	0
R W	RESERVED	RESERVED	RESERVED	RESERVED	EDG5B	EDG5A	EDG4B	EDG4A
Reset	0	0	0	0	0	0	0	0

Figure 22-12. Timer Control Register 3 (TCTL3)

Module Base + 0x000B

	7	6	5	4	3	2	1	0
R W	EDG3B	EDG3A	EDG2B	EDG2A	EDG1B	EDG1A	EDG0B	EDG0A
Reset	0	0	0	0	0	0	0	0

Figure 22-13. Timer Control Register 4 (TCTL4)

Read: Anytime

Write: Anytime.

Table 22-8. TCTL3/TCTL4 Field Descriptions

Note: Writing to unavailable bits has no effect. Reading from unavailable bits return a zero.

Field	Description
5:0 EDGnB EDGnA	**Input Capture Edge Control** — These six pairs of control bits configure the input capture edge detector circuits.

Table 22-9. Edge Detector Circuit Configuration

EDGnB	EDGnA	Configuration
0	0	Capture disabled
0	1	Capture on rising edges only
1	0	Capture on falling edges only

Table 22-9. Edge Detector Circuit Configuration

EDGnB	EDGnA	Configuration
1	1	Capture on any edge (rising or falling)

22.3.2.8 Timer Interrupt Enable Register (TIE)

Module Base + 0x000C

	7	6	5	4	3	2	1	0
R W	RESERVED	RESERVED	C5I	C4I	C3I	C2I	C1I	C0I
Reset	0	0	0	0	0	0	0	0

Figure 22-14. Timer Interrupt Enable Register (TIE)

Read: Anytime

Write: Anytime.

Table 22-10. TIE Field Descriptions

Note: Writing to unavailable bits has no effect. Reading from unavailable bits return a zero

Field	Description
5:0 C5I:C0I	**Input Capture/Output Compare "x" Interrupt Enable —** The bits in TIE correspond bit-for-bit with the bits in the TFLG1 status register. If cleared, the corresponding flag is disabled from causing a hardware interrupt. If set, the corresponding flag is enabled to cause a interrupt.

22.3.2.9 Timer System Control Register 2 (TSCR2)

Module Base + 0x000D

	7	6	5	4	3	2	1	0
R W	TOI	0	0	0	RESERVED	PR2	PR1	PR0
Reset	0	0	0	0	0	0	0	0

= Unimplemented or Reserved

Figure 22-15. Timer System Control Register 2 (TSCR2)

Read: Anytime

Write: Anytime.

Table 22-11. TSCR2 Field Descriptions

Field	Description
7 TOI	Timer Overflow Interrupt Enable 0 Interrupt inhibited. 1 Hardware interrupt requested when TOF flag set.
2:0 PR[2:0]	**Timer Prescaler Select** — These three bits select the frequency of the timer prescaler clock derived from the Bus Clock as shown in Table 22-12.

Table 22-12. Timer Clock Selection

PR2	PR1	PR0	Timer Clock
0	0	0	Bus Clock / 1
0	0	1	Bus Clock / 2
0	1	0	Bus Clock / 4
0	1	1	Bus Clock / 8
1	0	0	Bus Clock / 16
1	0	1	Bus Clock / 32
1	1	0	Bus Clock / 64
1	1	1	Bus Clock / 128

NOTE

The newly selected prescale factor will not take effect until the next synchronized edge where all prescale counter stages equal zero.

22.3.2.10 Main Timer Interrupt Flag 1 (TFLG1)

Module Base + 0x000E

	7	6	5	4	3	2	1	0
R W	RESERVED	RESERVED	C5F	C4F	C3F	C2F	C1F	C0F
Reset	0	0	0	0	0	0	0	0

Figure 22-16. Main Timer Interrupt Flag 1 (TFLG1)

Read: Anytime

Write: Used in the clearing mechanism (set bits cause corresponding bits to be cleared). Writing a zero will not affect current status of the bit.

Table 22-13. TRLG1 Field Descriptions

Note: Writing to unavailable bits has no effect. Reading from unavailable bits return a zero.

Field	Description
5:0 C[5:0]F	**Input Capture/Output Compare Channel "x" Flag** — These flags are set when an input capture or output compare event occurs. Clearing requires writing a one to the corresponding flag bit while TEN is set to one. **Note:** When TFFCA bit in TSCR register is set, a read from an input capture or a write into an output compare channel (0x0010–0x001F) will cause the corresponding channel flag CxF to be cleared.

22.3.2.11 Main Timer Interrupt Flag 2 (TFLG2)

Module Base + 0x000F

	7	6	5	4	3	2	1	0
R	TOF	0	0	0	0	0	0	0
W								
Reset	0	0	0	0	0	0	0	0

Unimplemented or Reserved

Figure 22-17. Main Timer Interrupt Flag 2 (TFLG2)

TFLG2 indicates when interrupt conditions have occurred. To clear a bit in the flag register, write the bit to one while TEN bit of TSCR1 .

Read: Anytime

Write: Used in clearing mechanism (set bits cause corresponding bits to be cleared).

Any access to TCNT will clear TFLG2 register if the TFFCA bit in TSCR register is set.

Table 22-14. TRLG2 Field Descriptions

Field	Description
7 TOF	**Timer Overflow Flag** — Set when 16-bit free-running timer overflows from 0xFFFF to 0x0000. Clearing this bit requires writing a one to bit 7 of TFLG2 register while the TEN bit of TSCR1 is set to one.

22.3.2.12 Timer Input Capture/Output Compare Registers High and Low 0–5(TCxH and TCxL)

Module Base + 0x0010 = TC0H
0x0012 = TC1H
0x0014=TC2H
0x0016=TC3H
0x0018=TC4H
0x001A=TC5H
0x001C=RESERVD
0x001E=RESERVD

	15	14	13	12	11	10	9	0
R W	Bit 15	Bit 14	Bit 13	Bit 12	Bit 11	Bit 10	Bit 9	Bit 8
Reset	0	0	0	0	0	0	0	0

Figure 22-18. Timer Input Capture/Output Compare Register x High (TCxH)

Module Base + 0x0011 = TC0L
0x0013 = TC1L
0x0015 =TC2L
0x0017=TC3L
0x0019 =TC4L
0x001B=TC5L
0x001D=RESERVD
0x001F=RESERVD

	7	6	5	4	3	2	1	0
R W	Bit 7	Bit 6	Bit 5	Bit 4	Bit 3	Bit 2	Bit 1	Bit 0
Reset	0	0	0	0	0	0	0	0

Figure 22-19. Timer Input Capture/Output Compare Register x Low (TCxL)

[1] This register is available only when the corresponding channel exists and is reserved if that channel does not exist. Writes to a reserved register have no functional effect. Reads from a reserved register return zeroes.

Depending on the TIOS bit for the corresponding channel, these registers are used to latch the value of the free-running counter when a defined transition is sensed by the corresponding input capture edge detector or to trigger an output action for output compare.

Read: Anytime

Write: Anytime for output compare function.Writes to these registers have no meaning or effect during input capture. All timer input capture/output compare registers are reset to 0x0000.

NOTE

Read/Write access in byte mode for high byte should take place before low byte otherwise it will give a different result.

22.3.2.13 Output Compare Pin Disconnect Register(OCPD)

Module Base + 0x002C

	7	6	5	4	3	2	1	0
R W	RESERVED	RESERVED	OCPD5	OCPD4	OCPD3	OCPD2	OCPD1	OCPD0
Reset	0	0	0	0	0	0	0	0

Figure 22-20. Output Compare Pin Disconnect Register (OCPD)

Read: Anytime

Write: Anytime

All bits reset to zero.

Table 22-15. OCPD Field Description

Note: Writing to unavailable bits has no effect. Reading from unavailable bits return a zero.

Field	Description
5:0 OCPD[5:0]	Output Compare Pin Disconnect Bits 0 Enables the timer channel port. Output Compare action will occur on the channel pin. These bits do not affect the input capture . 1 Disables the timer channel port. Output Compare action will not occur on the channel pin, but the output compare flag still become set.

22.3.2.14 Precision Timer Prescaler Select Register (PTPSR)

Module Base + 0x002E

	7	6	5	4	3	2	1	0
R W	PTPS7	PTPS6	PTPS5	PTPS4	PTPS3	PTPS2	PTPS1	PTPS0
Reset	0	0	0	0	0	0	0	0

Figure 22-21. Precision Timer Prescaler Select Register (PTPSR)

Read: Anytime

Write: Anytime

All bits reset to zero.

Table 22-16. PTPSR Field Descriptions

Field	Description
7:0 PTPS[7:0]	**Precision Timer Prescaler Select Bits** — These eight bits specify the division rate of the main Timer prescaler. These are effective only when the PRNT bit of TSCR1 is set to 1. Table 22-17 shows some selection examples in this case. The newly selected prescale factor will not take effect until the next synchronized edge where all prescale counter stages equal zero.

The Prescaler can be calculated as follows depending on logical value of the PTPS[7:0] and PRNT bit:

PRNT = 1 : Prescaler = PTPS[7:0] + 1

Table 22-17. Precision Timer Prescaler Selection Examples when PRNT = 1

PTPS7	PTPS6	PTPS5	PTPS4	PTPS3	PTPS2	PTPS1	PTPS0	Prescale Factor
0	0	0	0	0	0	0	0	1
0	0	0	0	0	0	0	1	2
0	0	0	0	0	0	1	0	3
0	0	0	0	0	0	1	1	4
-	-	-	-	-	-	-	-	-
-	-	-	-	-	-	-	-	-
-	-	-	-	-	-	-	-	-
0	0	0	1	0	0	1	1	20
0	0	0	1	0	1	0	0	21
0	0	0	1	0	1	0	1	22
-	-	-	-	-	-	-	-	-
-	-	-	-	-	-	-	-	-
-	-	-	-	-	-	-	-	-
1	1	1	1	1	1	0	0	253
1	1	1	1	1	1	0	1	254
1	1	1	1	1	1	1	0	255
1	1	1	1	1	1	1	1	256

22.4 Functional Description

This section provides a complete functional description of the timer TIM16B6CV3 block. Please refer to the detailed timer block diagram in Figure 22-22 as necessary.

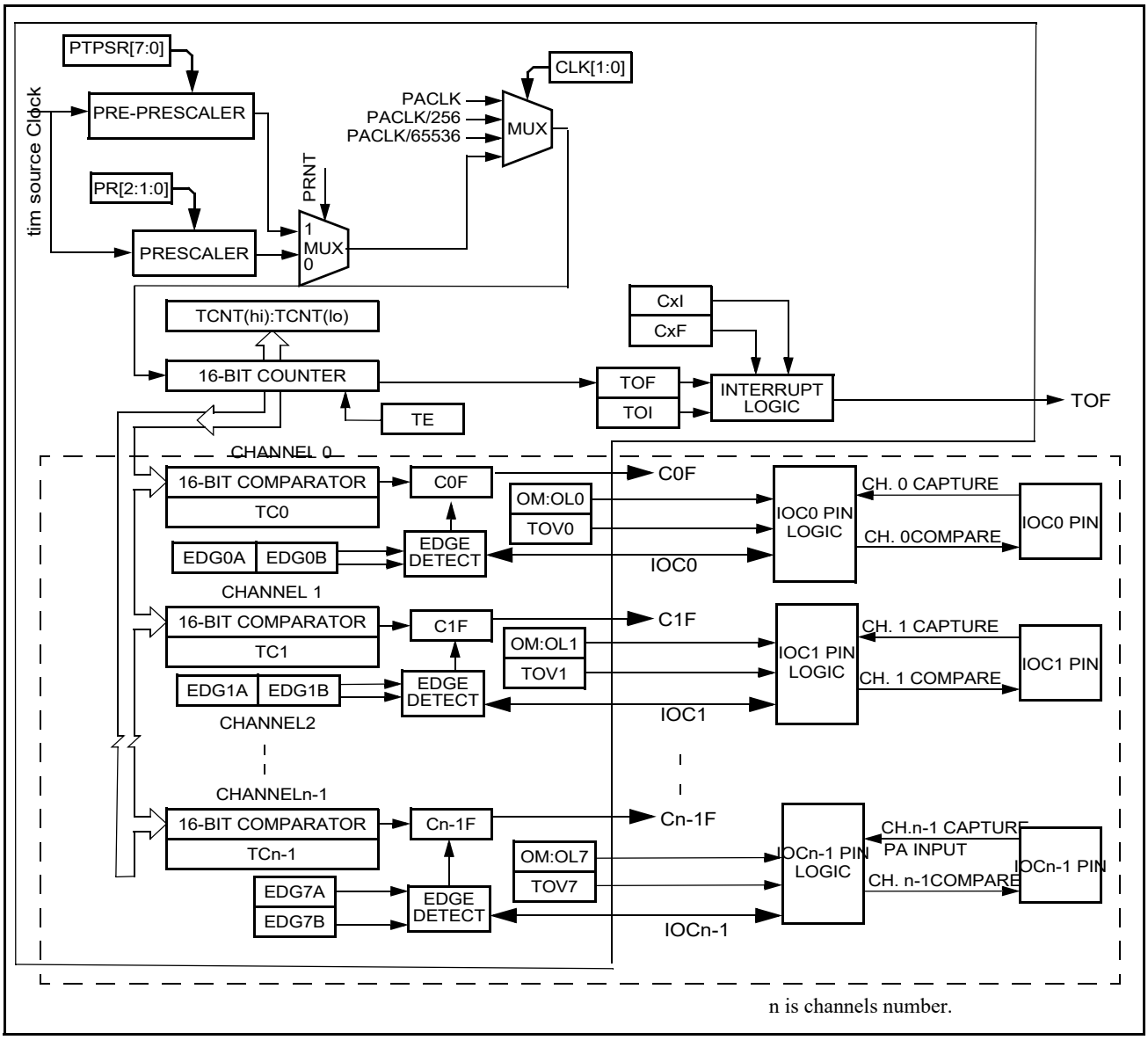

Figure 22-22. Detailed Timer Block Diagram

22.4.1 Prescaler

The prescaler divides the Bus clock by 1, 2, 4, 8, 16, 32, 64 or 128. The prescaler select bits, PR[2:0], select the prescaler divisor. PR[2:0] are in timer system control register 2 (TSCR2).

The prescaler divides the Bus clock by a prescalar value. Prescaler select bits PR[2:0] of in timer system control register 2 (TSCR2) are set to define a prescalar value that generates a divide by 1, 2, 4, 8, 16, 32, 64 and 128 when the PRNT bit in TSCR1 is disabled.

By enabling the PRNT bit of the TSCR1 register, the performance of the timer can be enhanced. In this case, it is possible to set additional prescaler settings for the main timer counter in the present timer by using PTPSR[7:0] bits of PTPSR register generating divide by 1, 2, 3, 4,....20, 21, 22, 23,.....255, or 256.

22.4.2 Input Capture

Clearing the I/O (input/output) select bit, IOSx, configures channel x as an input capture channel. The input capture function captures the time at which an external event occurs. When an active edge occurs on the pin of an input capture channel, the timer transfers the value in the timer counter into the timer channel registers, TCx.

The minimum pulse width for the input capture input is greater than two Bus clocks.

An input capture on channel x sets the CxF flag. The CxI bit enables the CxF flag to generate interrupt requests. Timer module must stay enabled (TEN bit of TSCR1 register must be set to one) while clearing CxF (writing one to CxF).

22.4.3 Output Compare

Setting the I/O select bit, IOSx, configures channel x when available as an output compare channel. The output compare function can generate a periodic pulse with a programmable polarity, duration, and frequency. When the timer counter reaches the value in the channel registers of an output compare channel, the timer can set, clear, or toggle the channel pin if the corresponding OCPDx bit is set to zero. An output compare on channel x sets the CxF flag. The CxI bit enables the CxF flag to generate interrupt requests. Timer module must stay enabled (TEN bit of TSCR1 register must be set to one) while clearing CxF (writing one to CxF).

The output mode and level bits, OMx and OLx, select set, clear, toggle on output compare. Clearing both OMx and OLx results in no output compare action on the output compare channel pin.

Setting a force output compare bit, FOCx, causes an output compare on channel x. A forced output compare does not set the channel flag.

Writing to the timer port bit of an output compare pin does not affect the pin state. The value written is stored in an internal latch. When the pin becomes available for general-purpose output, the last value written to the bit appears at the pin.

22.4.3.1 OC Channel Initialization

The internal register whose output drives OCx can be programmed before the timer drives OCx. The desired state can be programmed to this internal register by writing a one to CFORCx bit with TIOSx, OCPDx and TEN bits set to one.

Set OCx: Write a 1 to FOCx while TEN=1, IOSx=1, OMx=1, OLx=1 and OCPDx=1

Clear OCx: Write a 1 to FOCx while TEN=1, IOSx=1, OMx=1, OLx=0 and OCPDx=1

Setting OCPDx to zero allows the internal register to drive the programmed state to OCx. This allows a glitch free switch over of port from general purpose I/O to timer output once the OCPDx bit is set to zero.

22.5 Resets

The reset state of each individual bit is listed within Section 22.3, “Memory Map and Register Definition” which details the registers and their bit fields

22.6 Interrupts

This section describes interrupts originated by the TIM16B6CV3 block. Table 22-18 lists the interrupts generated by the TIM16B6CV3 to communicate with the MCU.

Table 22-18. TIM16B6CV3 Interrupts

Interrupt	Offset	Vector	Priority	Source	Description
C[5:0]F	—	—	—	Timer Channel 5–0	Active high timer channel interrupts 5–0
TOF	—	—	—	Timer Overflow	Timer Overflow interrupt

The TIM16B6CV3 could use up to 7 interrupt vectors. The interrupt vector offsets and interrupt numbers are chip dependent.

22.6.1 Channel [5:0] Interrupt (C[5:0]F)

This active high outputs will be asserted by the module to request a timer channel 7 – 0 interrupt. The TIM block only generates the interrupt and does not service it. Only bits related to implemented channels are valid.

22.6.2 Timer Overflow Interrupt (TOF)

This active high output will be asserted by the module to request a timer overflow interrupt. The TIM block only generates the interrupt and does not service it.

Chapter 23
Timer Module (TIM16B8CV3)

Table 23-1. Revision History

V03.00	Jan. 28, 2009		Initial version
V03.01	Aug. 26, 2009	23.1.2/23-738 23.3.2.15/23-754 23.3.2.2/23-744, 23.3.2.3/23-744, 23.3.2.4/23-745, 23.4.3/23-760	- Correct typo: TSCR ->TSCR1; - Correct typo: ECTxxx->TIMxxx - Correct reference: Figure 23-25 -> Figure 23-30 - Add description, “a counter overflow when TTOV[7] is set”, to be the condition of channel 7 override event. - Phrase the description of OC7M to make it more explicit
V03.02	Apri,12,2010	23.3.2.8/23-748 23.3.2.11/23-751 23.4.3/23-760	-Add Table 23-10 -update TCRE bit description -add Figure 23-31
V03.03	Jan,14,2013		-single source generate different channel guide

23.1 Introduction

The basic scalable timer consists of a 16-bit, software-programmable counter driven by a flexible programmable prescaler.

This timer can be used for many purposes, including input waveform measurements while simultaneously generating an output waveform. Pulse widths can vary from microseconds to many seconds.

This timer could contain up to 8 input capture/output compare channels with one pulse accumulator available only on channel 7. The input capture function is used to detect a selected transition edge and record the time. The output compare function is used for generating output signals or for timer software delays. The 16-bit pulse accumulator is used to operate as a simple event counter or a gated time accumulator. The pulse accumulator shares timer channel 7 when the channel is available and when in event mode.

A full access for the counter registers or the input capture/output compare registers should take place in one clock cycle. Accessing high byte and low byte separately for all of these registers may not yield the same result as accessing them in one word.

23.1.1 Features

The TIM16B8CV3 includes these distinctive features:

- Up to 8 channels available. (refer to device specification for exact number)
- All channels have same input capture/output compare functionality.

- Clock prescaling.
- 16-bit counter.
- 16-bit pulse accumulator on channel 7 .

23.1.2 Modes of Operation

Stop: Timer is off because clocks are stopped.

Freeze: Timer counter keeps on running, unless TSFRZ in TSCR1 is set to 1.

Wait: Counters keeps on running, unless TSWAI in TSCR1 is set to 1.

Normal: Timer counter keep on running, unless TEN in TSCR1 is cleared to 0.

23.1.3 Block Diagrams

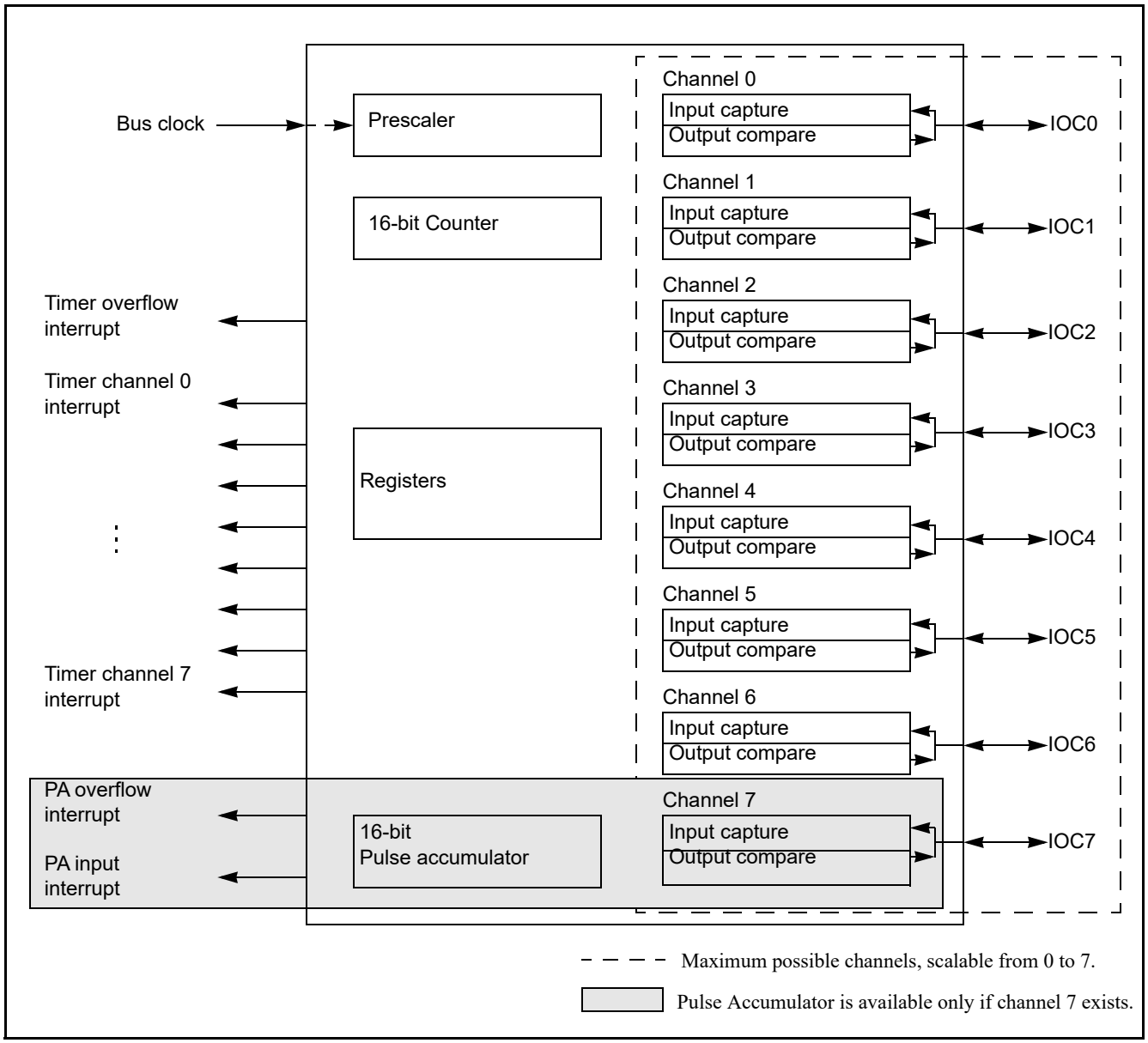

Figure 23-1. TIM16B8CV3 Block Diagram

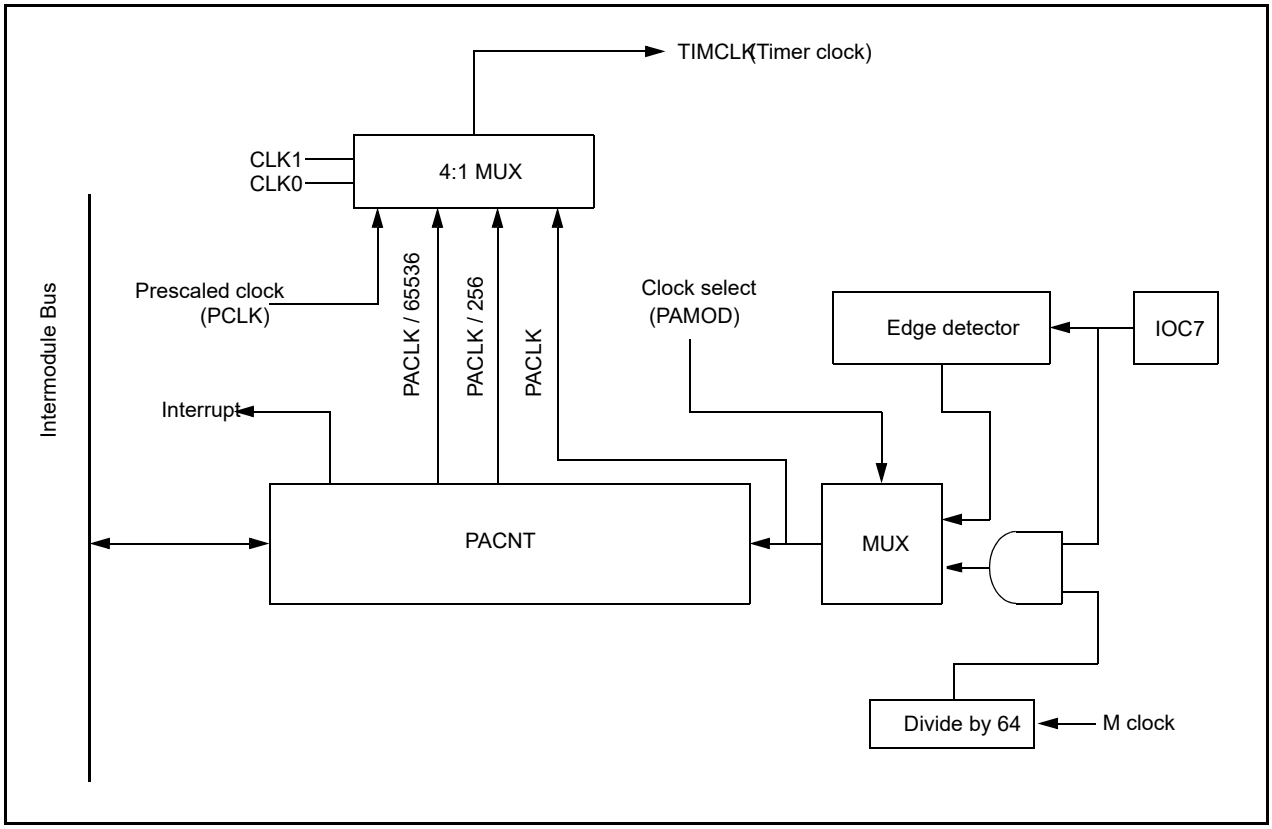

Figure 23-2. 16-Bit Pulse Accumulator Block Diagram

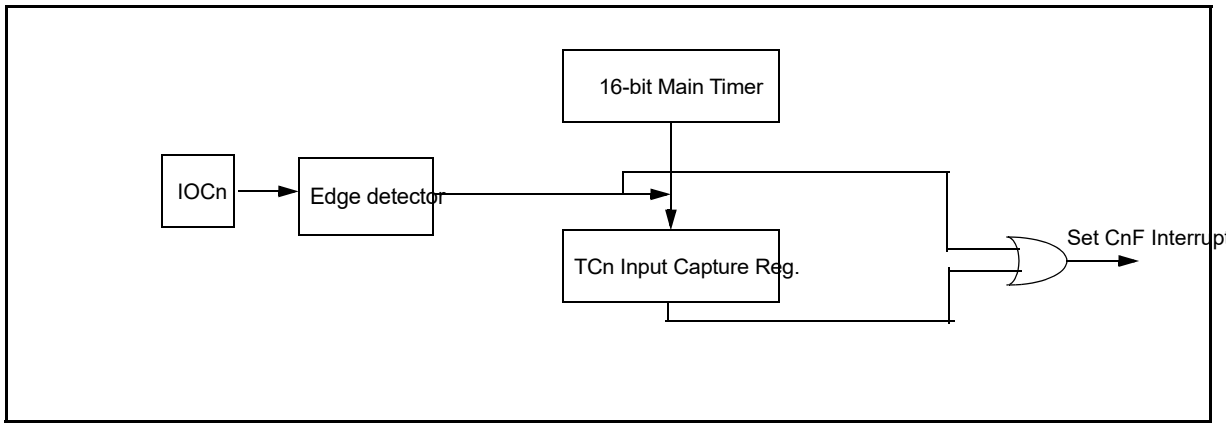

Figure 23-3. Interrupt Flag Setting

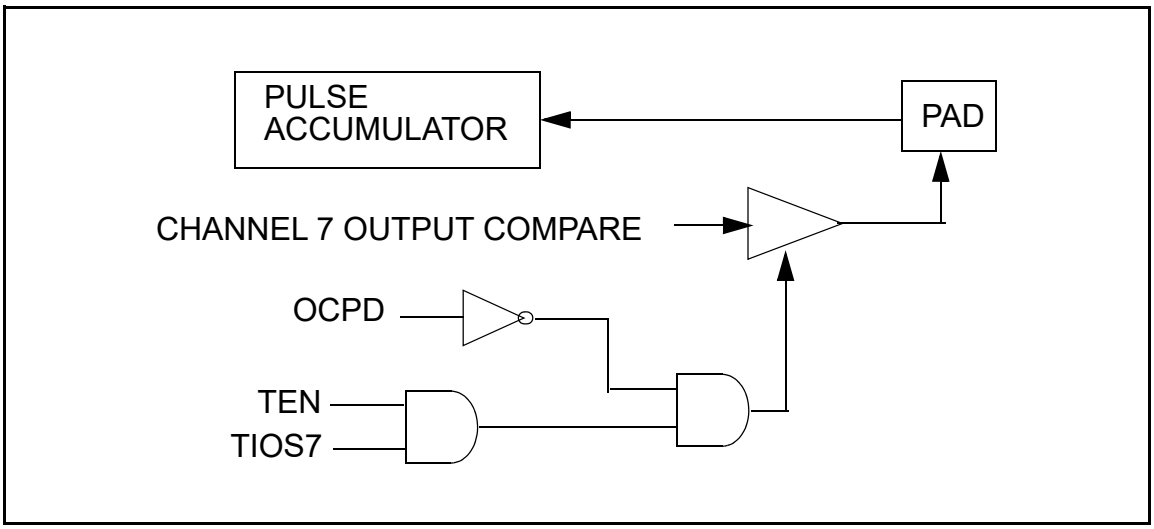

Figure 23-4. Channel 7 Output Compare/Pulse Accumulator Logic

23.2 External Signal Description

The TIM16B8CV3 module has a selected number of external pins. Refer to device specification for exact number.

23.2.1 IOC7 — Input Capture and Output Compare Channel 7

This pin serves as input capture or output compare for channel 7 . This can also be configured as pulse accumulator input.

23.2.2 IOC6 - IOC0 — Input Capture and Output Compare Channel 6-0

Those pins serve as input capture or output compare for TIM16B8CV3 channel .

NOTE

For the description of interrupts see Section 23.6, “Interrupts”.

23.3 Memory Map and Register Definition

This section provides a detailed description of all memory and registers.

23.3.1 Module Memory Map

The memory map for the TIM16B8CV3 module is given below in Figure 23-5. The address listed for each register is the address offset. The total address for each register is the sum of the base address for the TIM16B8CV3 module and the address offset for each register.

23.3.2 Register Descriptions

This section consists of register descriptions in address order. Each description includes a standard register diagram with an associated figure number. Details of register bit and field function follow the register diagrams, in bit order.

Only bits related to implemented channels are valid.

Register Name		Bit 7	6	5	4	3	2	1	Bit 0
0x0000 TIOS	R	IOS7	IOS6	IOS5	IOS4	IOS3	IOS2	IOS1	IOS0
	W								
0x0001 CFORC	R	0	0	0	0	0	0	0	0
	W	FOC7	FOC6	FOC5	FOC4	FOC3	FOC2	FOC1	FOC0
0x0002 OC7M	R	OC7M7	OC7M6	OC7M5	OC7M4	OC7M3	OC7M2	OC7M1	OC7M0
	W								
0x0003 OC7D	R	OC7D7	OC7D6	OC7D5	OC7D4	OC7D3	OC7D2	OC7D1	OC7D0
	W								
0x0004 TCNTH	R	TCNT15	TCNT14	TCNT13	TCNT12	TCNT11	TCNT10	TCNT9	TCNT8
	W								
0x0005 TCNTL	R	TCNT7	TCNT6	TCNT5	TCNT4	TCNT3	TCNT2	TCNT1	TCNT0
	W								
0x0006 TSCR1	R	TEN	TSWAI	TSFRZ	TFFCA	PRNT	0	0	0
	W								
0x0007 TTOV	R	TOV7	TOV6	TOV5	TOV4	TOV3	TOV2	TOV1	TOV0
	W								
0x0008 TCTL1	R	OM7	OL7	OM6	OL6	OM5	OL5	OM4	OL4
	W								
0x0009 TCTL2	R	OM3	OL3	OM2	OL2	OM1	OL1	OM0	OL0
	W								
0x000A TCTL3	R	EDG7B	EDG7A	EDG6B	EDG6A	EDG5B	EDG5A	EDG4B	EDG4A
	W								
0x000B TCTL4	R	EDG3B	EDG3A	EDG2B	EDG2A	EDG1B	EDG1A	EDG0B	EDG0A
	W								
0x000C TIE	R	C7I	C6I	C5I	C4I	C3I	C2I	C1I	C0I
	W								
0x000D TSCR2	R	TOI	0	0	0	TCRE	PR2	PR1	PR0
	W								
0x000E TFLG1	R	C7F	C6F	C5F	C4F	C3F	C2F	C1F	C0F
	W								
0x000F TFLG2	R	TOF	0	0	0	0	0	0	0
	W								
0x0010–0x001F TCxH–TCxL[1]	R	Bit 15	Bit 14	Bit 13	Bit 12	Bit 11	Bit 10	Bit 9	Bit 8
	W								
	R	Bit 7	Bit 6	Bit 5	Bit 4	Bit 3	Bit 2	Bit 1	Bit 0
	W								
0x0020 PACTL	R	0	PAEN	PAMOD	PEDGE	CLK1	CLK0	PAOVI	PAI
	W								

Figure 23-5. TIM16B8CV3 Register Summary (Sheet 1 of 2)

Register Name		Bit 7	6	5	4	3	2	1	Bit 0
0x0021 PAFLG	R	0	0	0	0	0	0	PAOVF	PAIF
	W								
0x0022 PACNTH	R	PACNT15	PACNT14	PACNT13	PACNT12	PACNT11	PACNT10	PACNT9	PACNT8
	W								
0x0023 PACNTL	R	PACNT7	PACNT6	PACNT5	PACNT4	PACNT3	PACNT2	PACNT1	PACNT0
	W								
0x0024–0x002B Reserved	R								
	W								
0x002C OCPD	R	OCPD7	OCPD6	OCPD5	OCPD4	OCPD3	OCPD2	OCPD1	OCPD0
	W								
0x002D Reserved	R								
0x002E PTPSR	R	PTPS7	PTPS6	PTPS5	PTPS4	PTPS3	PTPS2	PTPS1	PTPS0
	W								
0x002F Reserved	R								
	W								

Figure 23-5. TIM16B8CV3 Register Summary (Sheet 2 of 2)

[1] The register is available only if corresponding channel exists.

23.3.2.1 Timer Input Capture/Output Compare Select (TIOS)

Module Base + 0x0000

	7	6	5	4	3	2	1	0
R W	IOS7	IOS6	IOS5	IOS4	IOS3	IOS2	IOS1	IOS0
Reset	0	0	0	0	0	0	0	0

Figure 23-6. Timer Input Capture/Output Compare Select (TIOS)

Read: Anytime

Write: Anytime

Table 23-2. TIOS Field Descriptions

Note: Writing to unavailable bits has no effect. Reading from unavailable bits return a zero.

Field	Description
7:0 IOS[7:0]	Input Capture or Output Compare Channel Configuration 0 The corresponding implemented channel acts as an input capture. 1 The corresponding implemented channel acts as an output compare.

23.3.2.2 Timer Compare Force Register (CFORC)

Module Base + 0x0001

	7	6	5	4	3	2	1	0
R	0	0	0	0	0	0	0	0
W	FOC7	FOC6	FOC5	FOC4	FOC3	FOC2	FOC1	FOC0
Reset	0	0	0	0	0	0	0	0

Figure 23-7. Timer Compare Force Register (CFORC)

Read: Anytime but will always return 0x0000 (1 state is transient)

Write: Anytime

Table 23-3. CFORC Field Descriptions

Note: Writing to unavailable bits has no effect. Reading from unavailable bits return a zero.

Field	Description
7:0 FOC[7:0]	**Note: Force Output Compare Action for Channel 7:0** — A write to this register with the corresponding data bit(s) set causes the action which is programmed for output compare “x” to occur immediately. The action taken is the same as if a successful comparison had just taken place with the TCx register except the interrupt flag does not get set. A channel 7 event, which can be a counter overflow when TTOV[7] is set or a successful output compare on channel 7, overrides any channel 6:0 compares. If forced output compare on any channel occurs at the same time as the successful output compare then forced output compare action will take precedence and interrupt flag won’t get set.

23.3.2.3 Output Compare 7 Mask Register (OC7M)

Module Base + 0x0002

	7	6	5	4	3	2	1	0
R W	OC7M7	OC7M6	OC7M5	OC7M4	OC7M3	OC7M2	OC7M1	OC7M0
Reset	0	0	0	0	0	0	0	0

Figure 23-8. Output Compare 7 Mask Register (OC7M)

Read: Anytime

Write: Anytime

Table 23-4. OC7M Field Descriptions

Field	Description
7:0 OC7M[7:0]	**Output Compare 7 Mask** — A channel 7 event, which can be a counter overflow when TTOV[7] is set or a successful output compare on channel 7, overrides any channel 6:0 compares. For each OC7M bit that is set, the output compare action reflects the corresponding OC7D bit. 0 The corresponding OC7Dx bit in the output compare 7 data register will not be transferred to the timer port on a channel 7 event, even if the corresponding pin is setup for output compare. 1 The corresponding OC7Dx bit in the output compare 7 data register will be transferred to the timer port on a channel 7 event. **Note:** The corresponding channel must also be setup for output compare (IOSx = 1 and OCPDx = 0) for data to be transferred from the output compare 7 data register to the timer port.

23.3.2.4 Output Compare 7 Data Register (OC7D)

[1] .

Module Base + 0x0003

	7	6	5	4	3	2	1	0
R W	OC7D7	OC7D6	OC7D5	OC7D4	OC7D3	OC7D2	OC7D1	OC7D0
Reset	0	0	0	0	0	0	0	0

Figure 23-9. Output Compare 7 Data Register (OC7D)

Read: Anytime

Write: Anytime

Table 23-5. OC7D Field Descriptions

Field	Description
7:0 OC7D[7:0]	**Output Compare 7 Data** — A channel 7 event, which can be a counter overflow when TTOV[7] is set or a successful output compare on channel 7, can cause bits in the output compare 7 data register to transfer to the timer port data register depending on the output compare 7 mask register.

23.3.2.5 Timer Count Register (TCNT)

Module Base + 0x0004

	15	14	13	12	11	10	9	9
R W	TCNT15	TCNT14	TCNT13	TCNT12	TCNT11	TCNT10	TCNT9	TCNT8
Reset	0	0	0	0	0	0	0	0

Figure 23-10. Timer Count Register High (TCNTH)

Module Base + 0x0005

	7	6	5	4	3	2	1	0
R W	TCNT7	TCNT6	TCNT5	TCNT4	TCNT3	TCNT2	TCNT1	TCNT0
Reset	0	0	0	0	0	0	0	0

Figure 23-11. Timer Count Register Low (TCNTL)

The 16-bit main timer is an up counter.

A full access for the counter register should take place in one clock cycle. A separate read/write for high byte and low byte will give a different result than accessing them as a word.

Read: Anytime

Write: Has no meaning or effect in the normal mode; only writable in special modes (test_mode = 1).

The period of the first count after a write to the TCNT registers may be a different size because the write is not synchronized with the prescaler clock.

23.3.2.6 Timer System Control Register 1 (TSCR1)

Module Base + 0x0006

	7	6	5	4	3	2	1	0
R	TEN	TSWAI	TSFRZ	TFFCA	PRNT	0	0	0
W								
Reset	0	0	0	0	0	0	0	0

= Unimplemented or Reserved

Figure 23-12. Timer System Control Register 1 (TSCR1)

Read: Anytime

Write: Anytime

Table 23-6. TSCR1 Field Descriptions

Field	Description
7 TEN	Timer Enable 0 Disables the main timer, including the counter. Can be used for reducing power consumption. 1 Allows the timer to function normally. If for any reason the timer is not active, there is no ÷64 clock for the pulse accumulator because the ÷64 is generated by the timer prescaler.
6 TSWAI	Timer Module Stops While in Wait 0 Allows the timer module to continue running during wait. 1 Disables the timer module when the MCU is in the wait mode. Timer interrupts cannot be used to get the MCU out of wait. TSWAI also affects pulse accumulator.

Table 23-6. TSCR1 Field Descriptions (continued)

Field	Description
5 TSFRZ	Timer Stops While in Freeze Mode 0 Allows the timer counter to continue running while in freeze mode. 1 Disables the timer counter whenever the MCU is in freeze mode. This is useful for emulation. TSFRZ does not stop the pulse accumulator.
4 TFFCA	Timer Fast Flag Clear All 0 Allows the timer flag clearing to function normally. 1 For TFLG1(0x000E), a read from an input capture or a write to the output compare channel (0x0010–0x001F) causes the corresponding channel flag, CnF, to be cleared. For TFLG2 (0x000F), any access to the TCNT register (0x0004, 0x0005) clears the TOF flag. Any access to the PACNT registers (0x0022, 0x0023) clears the PAOVF and PAIF flags in the PAFLG register (0x0021) if channel 7 exists. This has the advantage of eliminating software overhead in a separate clear sequence. Extra care is required to avoid accidental flag clearing due to unintended accesses.
3 PRNT	Precision Timer 0 Enables legacy timer. PR0, PR1, and PR2 bits of the TSCR2 register are used for timer counter prescaler selection. 1 Enables precision timer. All bits of the PTPSR register are used for Precision Timer Prescaler Selection, and all bits. This bit is writable only once out of reset.

23.3.2.7 Timer Toggle On Overflow Register 1 (TTOV)

Module Base + 0x0007

	7	6	5	4	3	2	1	0
R W	TOV7	TOV6	TOV5	TOV4	TOV3	TOV2	TOV1	TOV0
Reset	0	0	0	0	0	0	0	0

Figure 23-13. Timer Toggle On Overflow Register 1 (TTOV)

Read: Anytime

Write: Anytime

Table 23-7. TTOV Field Descriptions

Note: Writing to unavailable bits has no effect. Reading from unavailable bits return a zero.

Field	Description
7:0 TOV[7:0]	**Toggle On Overflow Bits** — TOVx toggles output compare pin on overflow. This feature only takes effect when in output compare mode. When set, it takes precedence over forced output compare but not channel 7 override events. 0 Toggle output compare pin on overflow feature disabled. 1 Toggle output compare pin on overflow feature enabled.

23.3.2.8 Timer Control Register 1/Timer Control Register 2 (TCTL1/TCTL2)

Module Base + 0x0008

	7	6	5	4	3	2	1	0
R W	OM7	OL7	OM6	OL6	OM5	OL5	OM4	OL4
Reset	0	0	0	0	0	0	0	0

Figure 23-14. Timer Control Register 1 (TCTL1)

Module Base + 0x0009

	7	6	5	4	3	2	1	0
R W	OM3	OL3	OM2	OL2	OM1	OL1	OM0	OL0
Reset	0	0	0	0	0	0	0	0

Figure 23-15. Timer Control Register 2 (TCTL2)

Read: Anytime

Write: Anytime

Table 23-8. TCTL1/TCTL2 Field Descriptions

Note: Writing to unavailable bits has no effect. Reading from unavailable bits return a zero

Field	Description
7:0 OMx	**Output Mode** — These eight pairs of control bits are encoded to specify the output action to be taken as a result of a successful OCx compare. When either OMx or OLx is 1, the pin associated with OCx becomes an output tied to OCx. **Note:** To enable output action by OMx bits on timer port, the corresponding bit in OC7M should be cleared. For an output line to be driven by an OCx the OCPDx must be cleared.
7:0 OLx	**Output Level** — These eightpairs of control bits are encoded to specify the output action to be taken as a result of a successful OCx compare. When either OMx or OLx is 1, the pin associated with OCx becomes an output tied to OCx. **Note:** To enable output action by OLx bits on timer port, the corresponding bit in OC7M should be cleared. For an output line to be driven by an OCx the OCPDx must be cleared.

Table 23-9. Compare Result Output Action

OMx	OLx	Action
0	0	No output compare action on the timer output signal
0	1	Toggle OCx output line
1	0	Clear OCx output line to zero
1	1	Set OCx output line to one

Note: To enable output action using the OM7 and OL7 bits on the timer port,the corresponding bit OC7M7 in the OC7M register must also be cleared. The settings for these bits can be seen inTable 23-10.

Table 23-10. The OC7 and OCx event priority

OC7M7=0				OC7M7=1			
OC7Mx=1		OC7Mx=0		OC7Mx=1		OC7Mx=0	
TC7=TCx	TC7>TCx	TC7=TCx	TC7>TCx	TC7=TCx	TC7>TCx	TC7=TCx	TC7>TCx
IOCx=OC7Dx IOC7=OM7/OL7	IOCx=OC7Dx +OMx/OLx IOC7=OM7/OL7	IOCx=OMx/OLx IOC7=OM7/OL7		IOCx=OC7Dx IOC7=OC7D7	IOCx=OC7Dx +OMx/OLx IOC7=OC7D7	IOCx=OMx/OLx IOC7=OC7D7	

Note: in Table 23-10, the IOS7 and IOSx should be set to 1

IOSx is the register TIOS bit x,

OC7Mx is the register OC7M bit x,

TCx is timer Input Capture/Output Compare register,

IOCx is channel x,

OMx/OLx is the register TCTL1/TCTL2,

OC7Dx is the register OC7D bit x.

IOCx = OC7Dx+ OMx/OLx, means that both OC7 event and OCx event will change channel x value.

23.3.2.9 Timer Control Register 3/Timer Control Register 4 (TCTL3 and TCTL4)

Module Base + 0x000A

	7	6	5	4	3	2	1	0
R W	EDG7B	EDG7A	EDG6B	EDG6A	EDG5B	EDG5A	EDG4B	EDG4A
Reset	0	0	0	0	0	0	0	0

Figure 23-16. Timer Control Register 3 (TCTL3)

Module Base + 0x000B

	7	6	5	4	3	2	1	0
R W	EDG3B	EDG3A	EDG2B	EDG2A	EDG1B	EDG1A	EDG0B	EDG0A
Reset	0	0	0	0	0	0	0	0

Figure 23-17. Timer Control Register 4 (TCTL4)

Read: Anytime

Write: Anytime.

Table 23-11. TCTL3/TCTL4 Field Descriptions

Note: Writing to unavailable bits has no effect. Reading from unavailable bits return a zero.

Field	Description
7:0 EDGnB EDGnA	**Input Capture Edge Control** — These eight pairs of control bits configure the input capture edge detector circuits.

Table 23-12. Edge Detector Circuit Configuration

EDGnB	EDGnA	Configuration
0	0	Capture disabled
0	1	Capture on rising edges only
1	0	Capture on falling edges only
1	1	Capture on any edge (rising or falling)

23.3.2.10 Timer Interrupt Enable Register (TIE)

Module Base + 0x000C

	7	6	5	4	3	2	1	0
R W	C7I	C6I	C5I	C4I	C3I	C2I	C1I	C0I
Reset	0	0	0	0	0	0	0	0

Figure 23-18. Timer Interrupt Enable Register (TIE)

Read: Anytime

Write: Anytime.

Table 23-13. TIE Field Descriptions

Note: Writing to unavailable bits has no effect. Reading from unavailable bits return a zero

Field	Description
7:0 C7I:C0I	**Input Capture/Output Compare "x" Interrupt Enable —** The bits in TIE correspond bit-for-bit with the bits in the TFLG1 status register. If cleared, the corresponding flag is disabled from causing a hardware interrupt. If set, the corresponding flag is enabled to cause a interrupt.

23.3.2.11 Timer System Control Register 2 (TSCR2)

Module Base + 0x000D

	7	6	5	4	3	2	1	0
R	TOI	0	0	0	TCRE	PR2	PR1	PR0
W								
Reset	0	0	0	0	0	0	0	0

= Unimplemented or Reserved

Figure 23-19. Timer System Control Register 2 (TSCR2)

Read: Anytime

Write: Anytime.

Table 23-14. TSCR2 Field Descriptions

Field	Description
7 TOI	Timer Overflow Interrupt Enable 0 Interrupt inhibited. 1 Hardware interrupt requested when TOF flag set.
3 TCRE	**Timer Counter Reset Enable** — This bit allows the timer counter to be reset by a successful output compare 7 event. This mode of operation is similar to an up-counting modulus counter. 0 Counter reset inhibited and counter free runs. 1 Counter reset by a successful output compare 7. **Note:** If TC7 = 0x0000 and TCRE = 1, TCNT will stay at 0x0000 continuously. If TC7 = 0xFFFF and TCRE = 1, TOF will never be set when TCNT is reset from 0xFFFF to 0x0000. **Note:** TCRE=1 and TC7!=0, the TCNT cycle period will be TC7 x "prescaler counter width" + "1 Bus Clock", for a more detail explanation please refer to Section 23.4.3, “Output Compare **Note:** This bit and feature is available only when channel 7 exists. If channel 7 doesn’t exist, this bit is reserved. Writing to reserved bit has no effect. Read from reserved bit return a zero.
2:0 PR[2:0]	**Timer Prescaler Select** — These three bits select the frequency of the timer prescaler clock derived from the Bus Clock as shown in Table 23-15.

Table 23-15. Timer Clock Selection

PR2	PR1	PR0	Timer Clock
0	0	0	Bus Clock / 1
0	0	1	Bus Clock / 2
0	1	0	Bus Clock / 4
0	1	1	Bus Clock / 8
1	0	0	Bus Clock / 16
1	0	1	Bus Clock / 32
1	1	0	Bus Clock / 64
1	1	1	Bus Clock / 128

NOTE

The newly selected prescale factor will not take effect until the next synchronized edge where all prescale counter stages equal zero.

23.3.2.12 Main Timer Interrupt Flag 1 (TFLG1)

Module Base + 0x000E

	7	6	5	4	3	2	1	0
R W	C7F	C6F	C5F	C4F	C3F	C2F	C1F	C0F
Reset	0	0	0	0	0	0	0	0

Figure 23-20. Main Timer Interrupt Flag 1 (TFLG1)

Read: Anytime

Write: Used in the clearing mechanism (set bits cause corresponding bits to be cleared). Writing a zero will not affect current status of the bit.

Table 23-16. TRLG1 Field Descriptions

Note: Writing to unavailable bits has no effect. Reading from unavailable bits return a zero.

Field	Description
7:0 C[7:0]F	**Input Capture/Output Compare Channel "x" Flag** — These flags are set when an input capture or output compare event occurs. Clearing requires writing a one to the corresponding flag bit while TEN or PAEN is set to one. **Note:** When TFFCA bit in TSCR register is set, a read from an input capture or a write into an output compare channel (0x0010–0x001F) will cause the corresponding channel flag CxF to be cleared.

23.3.2.13 Main Timer Interrupt Flag 2 (TFLG2)

Module Base + 0x000F

	7	6	5	4	3	2	1	0
R	TOF	0	0	0	0	0	0	0
W								
Reset	0	0	0	0	0	0	0	0

Unimplemented or Reserved

Figure 23-21. Main Timer Interrupt Flag 2 (TFLG2)

TFLG2 indicates when interrupt conditions have occurred. To clear a bit in the flag register, write the bit to one while TEN bit of TSCR1 or PAEN bit of PACTL is set to one.

Read: Anytime

Write: Used in clearing mechanism (set bits cause corresponding bits to be cleared).

Any access to TCNT will clear TFLG2 register if the TFFCA bit in TSCR register is set.

Table 23-17. TRLG2 Field Descriptions

Field	Description
7 TOF	**Timer Overflow Flag** — Set when 16-bit free-running timer overflows from 0xFFFF to 0x0000. Clearing this bit requires writing a one to bit 7 of TFLG2 register while the TEN bit of TSCR1 or PAEN bit of PACTL is set to one (See also TCRE control bit explanation) .

23.3.2.14 Timer Input Capture/Output Compare Registers High and Low 0–7(TCxH and TCxL)

Module Base + 0x0010 = TC0H 0x0018=TC4H
0x0012 = TC1H 0x001A=TC5H
0x0014=TC2H 0x001C=TC6H
0x0016=TC3H 0x001E=TC7H

	15	14	13	12	11	10	9	0
R W	Bit 15	Bit 14	Bit 13	Bit 12	Bit 11	Bit 10	Bit 9	Bit 8
Reset	0	0	0	0	0	0	0	0

Figure 23-22. Timer Input Capture/Output Compare Register x High (TCxH)

Module Base + 0x0011 = TC0L 0x0019 =TC4L
0x0013 = TC1L 0x001B=TC5L
0x0015 =TC2L 0x001D=TC6L
0x0017=TC3L 0x001F=TC7L

	7	6	5	4	3	2	1	0
R W	Bit 7	Bit 6	Bit 5	Bit 4	Bit 3	Bit 2	Bit 1	Bit 0
Reset	0	0	0	0	0	0	0	0

Figure 23-23. Timer Input Capture/Output Compare Register x Low (TCxL)

[1] This register is available only when the corresponding channel exists and is reserved if that channel does not exist. Writes to a reserved register have no functional effect. Reads from a reserved register return zeroes.

Depending on the TIOS bit for the corresponding channel, these registers are used to latch the value of the free-running counter when a defined transition is sensed by the corresponding input capture edge detector or to trigger an output action for output compare.

Read: Anytime

Write: Anytime for output compare function.Writes to these registers have no meaning or effect during input capture. All timer input capture/output compare registers are reset to 0x0000.

NOTE

Read/Write access in byte mode for high byte should take place before low byte otherwise it will give a different result.

23.3.2.15 16-Bit Pulse Accumulator Control Register (PACTL)

Module Base + 0x0020

	7	6	5	4	3	2	1	0
R	0	PAEN	PAMOD	PEDGE	CLK1	CLK0	PAOVI	PAI
W								
Reset	0	0	0	0	0	0	0	0

Unimplemented or Reserved

Figure 23-24. 16-Bit Pulse Accumulator Control Register (PACTL)

Read: Any time

Write: Any time

When PAEN is set, the Pulse Accumulator counter is enabled. The Pulse Accumulator counter shares the input pin with IOC7.

Table 23-18. PACTL Field Descriptions

Field	Description
6 PAEN	**Pulse Accumulator System Enable** — PAEN is independent from TEN. With timer disabled, the pulse accumulator can function unless pulse accumulator is disabled. 0 16-Bit Pulse Accumulator system disabled. 1 Pulse Accumulator system enabled.
5 PAMOD	**Pulse Accumulator Mode** — This bit is active only when the Pulse Accumulator is enabled (PAEN = 1). See Table 23-19. 0 Event counter mode. 1 Gated time accumulation mode.
4 PEDGE	**Pulse Accumulator Edge Control** — This bit is active only when the Pulse Accumulator is enabled (PAEN = 1). For PAMOD bit = 0 (event counter mode). See Table 23-19. 0 Falling edges on IOC7 pin cause the count to be increased. 1 Rising edges on IOC7 pin cause the count to be increased. For PAMOD bit = 1 (gated time accumulation mode). 0 IOC7 input pin high enables M (Bus clock) divided by 64 clock to Pulse Accumulator and the trailing falling edge on IOC7 sets the PAIF flag. 1 IOC7 input pin low enables M (Bus clock) divided by 64 clock to Pulse Accumulator and the trailing rising edge on IOC7 sets the PAIF flag.
3:2 CLK[1:0]	**Clock Select Bits —** Refer to Table 23-20.
1 PAOVI	Pulse Accumulator Overflow Interrupt Enable 0 Interrupt inhibited. 1 Interrupt requested if PAOVF is set.
0 PAI	Pulse Accumulator Input Interrupt Enable 0 Interrupt inhibited. 1 Interrupt requested if PAIF is set.

Table 23-19. Pin Action

PAMOD	PEDGE	Pin Action
0	0	Falling edge
0	1	Rising edge
1	0	Div. by 64 clock enabled with pin high level
1	1	Div. by 64 clock enabled with pin low level

NOTE

If the timer is not active (TEN = 0 in TSCR), there is no divide-by-64 because the ÷64 clock is generated by the timer prescaler.

Table 23-20. Timer Clock Selection

CLK1	CLK0	Timer Clock
0	0	Use timer prescaler clock as timer counter clock
0	1	Use PACLK as input to timer counter clock
1	0	Use PACLK/256 as timer counter clock frequency
1	1	Use PACLK/65536 as timer counter clock frequency

For the description of PACLK please refer Figure 23-30**.**

If the pulse accumulator is disabled (PAEN = 0), the prescaler clock from the timer is always used as an input clock to the timer counter. The change from one selected clock to the other happens immediately after these bits are written.

23.3.2.16 Pulse Accumulator Flag Register (PAFLG)

[1] .

Module Base + 0x0021

	7	6	5	4	3	2	1	0
R	0	0	0	0	0	0	PAOVF	PAIF
W								
Reset	0	0	0	0	0	0	0	0

Unimplemented or Reserved

Figure 23-25. Pulse Accumulator Flag Register (PAFLG)

Read: Anytime

Write: Anytime

When the TFFCA bit in the TSCR register is set, any access to the PACNT register will clear all the flags in the PAFLG register. Timer module or Pulse Accumulator must stay enabled (TEN=1 or PAEN=1) while clearing these bits.

Table 23-21. PAFLG Field Descriptions

Field	Description
1 PAOVF	**Pulse Accumulator Overflow Flag** — Set when the 16-bit pulse accumulator overflows from 0xFFFF to 0x0000. Clearing this bit requires writing a one to this bit in the PAFLG register while TEN bit of TSCR1 or PAEN bit of PACTL register is set to one.
0 PAIF	**Pulse Accumulator Input edge Flag** — Set when the selected edge is detected at the IOC7 input pin.In event mode the event edge triggers PAIF and in gated time accumulation mode the trailing edge of the gate signal at the IOC7 input pin triggers PAIF. Clearing this bit requires writing a one to this bit in the PAFLG register while TEN bit of TSCR1 or PAEN bit of PACTL register is set to one. Any access to the PACNT register will clear all the flags in this register when TFFCA bit in register TSCR(0x0006) is set.

23.3.2.17 Pulse Accumulators Count Registers (PACNT)

Module Base + 0x0022

	15	14	13	12	11	10	9	0
R W	PACNT15	PACNT14	PACNT13	PACNT12	PACNT11	PACNT10	PACNT9	PACNT8
Reset	0	0	0	0	0	0	0	0

Figure 23-26. Pulse Accumulator Count Register High (PACNTH)

1 .

Module Base + 0x0023

	7	6	5	4	3	2	1	0
R W	PACNT7	PACNT6	PACNT5	PACNT4	PACNT3	PACNT2	PACNT1	PACNT0
Reset	0	0	0	0	0	0	0	0

Figure 23-27. Pulse Accumulator Count Register Low (PACNTL)

Read: Anytime

Write: Anytime

These registers contain the number of active input edges on its input pin since the last reset.

When PACNT overflows from 0xFFFF to 0x0000, the Interrupt flag PAOVF in PAFLG (0x0021) is set.

Full count register access should take place in one clock cycle. A separate read/write for high byte and low byte will give a different result than accessing them as a word.

NOTE

Reading the pulse accumulator counter registers immediately after an active edge on the pulse accumulator input pin may miss the last count because the input has to be synchronized with the Bus clock first.

23.3.2.18 Output Compare Pin Disconnect Register(OCPD)

Module Base + 0x002C

	7	6	5	4	3	2	1	0
R W	OCPD7	OCPD6	OCPD5	OCPD4	OCPD3	OCPD2	OCPD1	OCPD0
Reset	0	0	0	0	0	0	0	0

Figure 23-28. Output Compare Pin Disconnect Register (OCPD)

Read: Anytime

Write: Anytime

All bits reset to zero.

Table 23-22. OCPD Field Description

Note: Writing to unavailable bits has no effect. Reading from unavailable bits return a zero.

Field	Description
7:0 OCPD[7:0]	Output Compare Pin Disconnect Bits 0 Enables the timer channel port. Output Compare action will occur on the channel pin. These bits do not affect the input capture or pulse accumulator functions. 1 Disables the timer channel port. Output Compare action will not occur on the channel pin, but the output compare flag still become set.

23.3.2.19 Precision Timer Prescaler Select Register (PTPSR)

Module Base + 0x002E

	7	6	5	4	3	2	1	0
R W	PTPS7	PTPS6	PTPS5	PTPS4	PTPS3	PTPS2	PTPS1	PTPS0
Reset	0	0	0	0	0	0	0	0

Figure 23-29. Precision Timer Prescaler Select Register (PTPSR)

Read: Anytime

Write: Anytime

All bits reset to zero.

Table 23-23. PTPSR Field Descriptions

Field	Description
7:0 PTPS[7:0]	**Precision Timer Prescaler Select Bits** — These eight bits specify the division rate of the main Timer prescaler. These are effective only when the PRNT bit of TSCR1 is set to 1. Table 23-24 shows some selection examples in this case. The newly selected prescale factor will not take effect until the next synchronized edge where all prescale counter stages equal zero.

The Prescaler can be calculated as follows depending on logical value of the PTPS[7:0] and PRNT bit:

PRNT = 1 : Prescaler = PTPS[7:0] + 1

Table 23-24. Precision Timer Prescaler Selection Examples when PRNT = 1

PTPS7	PTPS6	PTPS5	PTPS4	PTPS3	PTPS2	PTPS1	PTPS0	Prescale Factor
0	0	0	0	0	0	0	0	1
0	0	0	0	0	0	0	1	2
0	0	0	0	0	0	1	0	3
0	0	0	0	0	0	1	1	4
-	-	-	-	-	-	-	-	-
-	-	-	-	-	-	-	-	-
-	-	-	-	-	-	-	-	-
0	0	0	1	0	0	1	1	20
0	0	0	1	0	1	0	0	21
0	0	0	1	0	1	0	1	22
-	-	-	-	-	-	-	-	-
-	-	-	-	-	-	-	-	-
-	-	-	-	-	-	-	-	-
1	1	1	1	1	1	0	0	253
1	1	1	1	1	1	0	1	254
1	1	1	1	1	1	1	0	255
1	1	1	1	1	1	1	1	256

23.4 Functional Description

This section provides a complete functional description of the timer TIM16B8CV3 block. Please refer to the detailed timer block diagram in Figure 23-30 as necessary.

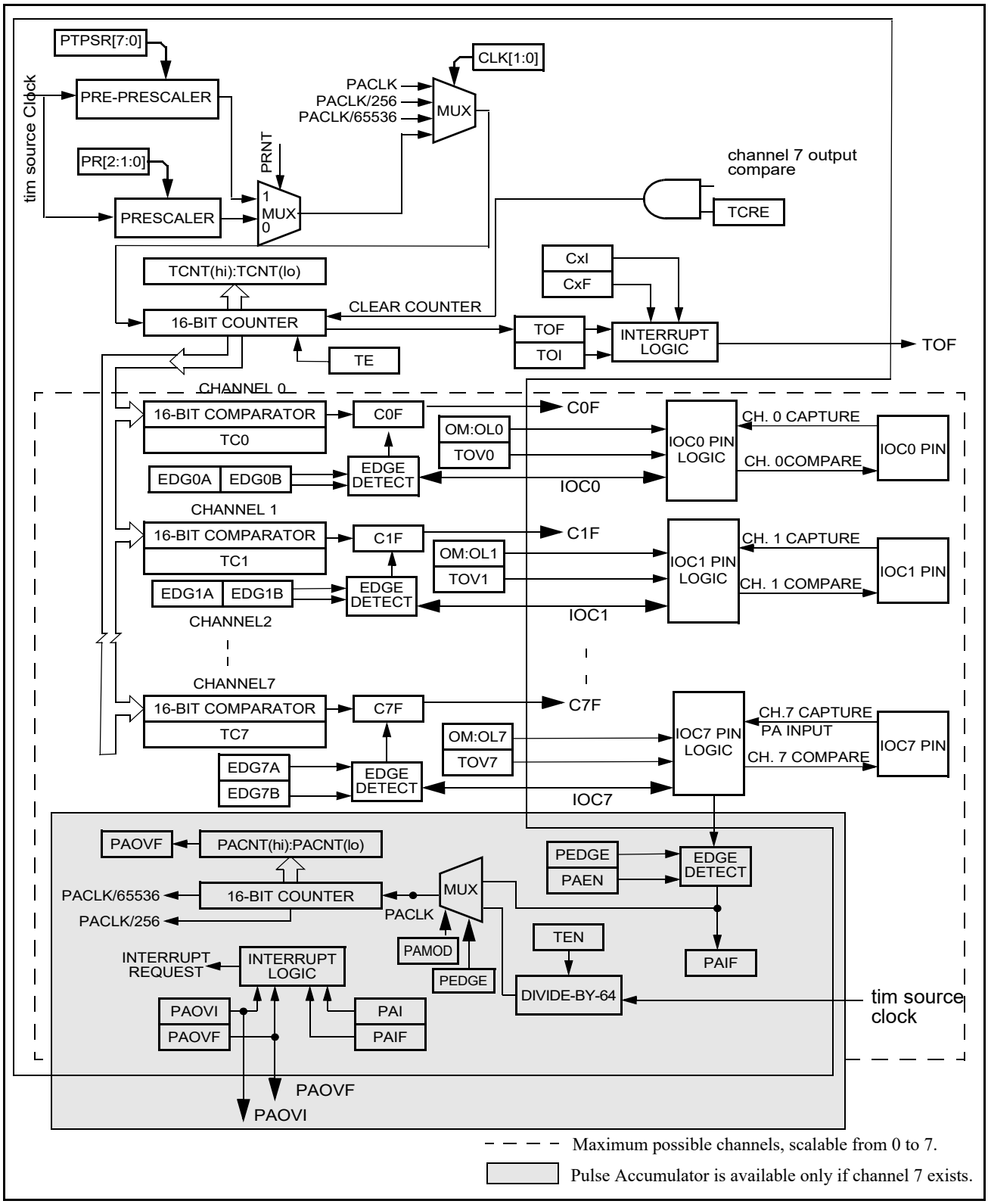

Figure 23-30. Detailed Timer Block Diagram

23.4.1 Prescaler

The prescaler divides the Bus clock by 1, 2, 4, 8, 16, 32, 64 or 128. The prescaler select bits, PR[2:0], select the prescaler divisor. PR[2:0] are in timer system control register 2 (TSCR2).

The prescaler divides the Bus clock by a prescalar value. Prescaler select bits PR[2:0] of in timer system control register 2 (TSCR2) are set to define a prescalar value that generates a divide by 1, 2, 4, 8, 16, 32, 64 and 128 when the PRNT bit in TSCR1 is disabled.

By enabling the PRNT bit of the TSCR1 register, the performance of the timer can be enhanced. In this case, it is possible to set additional prescaler settings for the main timer counter in the present timer by using PTPSR[7:0] bits of PTPSR register generating divide by 1, 2, 3, 4,....20, 21, 22, 23,.....255, or 256.

23.4.2 Input Capture

Clearing the I/O (input/output) select bit, IOSx, configures channel x as an input capture channel. The input capture function captures the time at which an external event occurs. When an active edge occurs on the pin of an input capture channel, the timer transfers the value in the timer counter into the timer channel registers, TCx.

The minimum pulse width for the input capture input is greater than two Bus clocks.

An input capture on channel x sets the CxF flag. The CxI bit enables the CxF flag to generate interrupt requests. Timer module or Pulse Accumulator must stay enabled (TEN bit of TSCR1 or PAEN bit of PACTL register must be set to one) while clearing CxF (writing one to CxF).

23.4.3 Output Compare

Setting the I/O select bit, IOSx, configures channel x when available as an output compare channel. The output compare function can generate a periodic pulse with a programmable polarity, duration, and frequency. When the timer counter reaches the value in the channel registers of an output compare channel, the timer can set, clear, or toggle the channel pin if the corresponding OCPDx bit is set to zero. An output compare on channel x sets the CxF flag. The CxI bit enables the CxF flag to generate interrupt requests. Timer module or Pulse Accumulator must stay enabled (TEN bit of TSCR1 or PAEN bit of PACTL register must be set to one) while clearing CxF (writing one to CxF).

The output mode and level bits, OMx and OLx, select set, clear, toggle on output compare. Clearing both OMx and OLx results in no output compare action on the output compare channel pin.

Setting a force output compare bit, FOCx, causes an output compare on channel x. A forced output compare does not set the channel flag.

A channel 7 event, which can be a counter overflow when TTOV[7] is set or a successful output compare on channel 7, overrides output compares on all other output compare channels. The output compare 7 mask register masks the bits in the output compare 7 data register. The timer counter reset enable bit, TCRE, enables channel 7 output compares to reset the timer counter. A channel 7 output compare can reset the timer counter even if the IOC7 pin is being used as the pulse accumulator input.

Writing to the timer port bit of an output compare pin does not affect the pin state. The value written is stored in an internal latch. When the pin becomes available for general-purpose output, the last value written to the bit appears at the pin.

When TCRE is set and TC7 is not equal to 0, then TCNT will cycle from 0 to TC7. When TCNT reaches TC7 value, it will last only one Bus cycle then reset to 0.

Note: in Figure 23-31,if PR[2:0] is equal to 0, one prescaler counter equal to one Bus clock

Figure 23-31. The TCNT cycle diagram under TCRE=1 condition

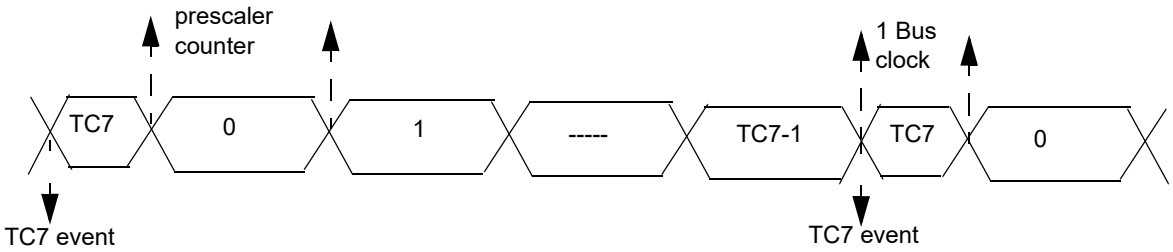

23.4.3.1 OC Channel Initialization

The internal register whose output drives OCx can be programmed before the timer drives OCx. The desired state can be programmed to this internal register by writing a one to CFORCx bit with TIOSx, OCPDx and TEN bits set to one.

Set OCx: Write a 1 to FOCx while TEN=1, IOSx=1, OMx=1, OLx=1 and OCPDx=1

Clear OCx: Write a 1 to FOCx while TEN=1, IOSx=1, OMx=1, OLx=0 and OCPDx=1

Setting OCPDx to zero allows the internal register to drive the programmed state to OCx. This allows a glitch free switch over of port from general purpose I/O to timer output once the OCPDx bit is set to zero.

23.4.4 Pulse Accumulator

The pulse accumulator (PACNT) is a 16-bit counter that can operate in two modes:

Event counter mode — Counting edges of selected polarity on the pulse accumulator input pin, PAI.

Gated time accumulation mode — Counting pulses from a divide-by-64 clock. The PAMOD bit selects the mode of operation.

The minimum pulse width for the PAI input is greater than two Bus clocks.

23.4.5 Event Counter Mode

Clearing the PAMOD bit configures the PACNT for event counter operation. An active edge on the IOC7 pin increments the pulse accumulator counter. The PEDGE bit selects falling edges or rising edges to increment the count.

NOTE

The PACNT input and timer channel 7 use the same pin IOC7. To use the IOC7, disconnect it from the output logic by clearing the channel 7 output mode and output level bits, OM7 and OL7. Also clear the channel 7 output compare 7 mask bit, OC7M7.

The Pulse Accumulator counter register reflect the number of active input edges on the PACNT input pin since the last reset.

The PAOVF bit is set when the accumulator rolls over from 0xFFFF to 0x0000. The pulse accumulator overflow interrupt enable bit, PAOVI, enables the PAOVF flag to generate interrupt requests.

NOTE

The pulse accumulator counter can operate in event counter mode even when the timer enable bit, TEN, is clear.

23.4.6 Gated Time Accumulation Mode

Setting the PAMOD bit configures the pulse accumulator for gated time accumulation operation. An active level on the PACNT input pin enables a divided-by-64 clock to drive the pulse accumulator. The PEDGE bit selects low levels or high levels to enable the divided-by-64 clock.

The trailing edge of the active level at the IOC7 pin sets the PAIF. The PAI bit enables the PAIF flag to generate interrupt requests.

The pulse accumulator counter register reflect the number of pulses from the divided-by-64 clock since the last reset.

NOTE

The timer prescaler generates the divided-by-64 clock. If the timer is not active, there is no divided-by-64 clock.

23.5 Resets

The reset state of each individual bit is listed within Section 23.3, “Memory Map and Register Definition” which details the registers and their bit fields

23.6 Interrupts

This section describes interrupts originated by the TIM16B8CV3 block. Table 23-25 lists the interrupts generated by the TIM16B8CV3 to communicate with the MCU.

Table 23-25. TIM16B8CV3 Interrupts

Interrupt	Offset	Vector	Priority	Source	Description
C[7:0]F	—	—	—	Timer Channel 7–0	Active high timer channel interrupts 7–0
PAOVI	—	—	—	Pulse Accumulator Input	Active high pulse accumulator input interrupt
PAOVF	—	—	—	Pulse Accumulator Overflow	Pulse accumulator overflow interrupt
TOF	—	—	—	Timer Overflow	Timer Overflow interrupt

The TIM16B8CV3 could use up to 11 interrupt vectors. The interrupt vector offsets and interrupt numbers are chip dependent.

23.6.1 Channel [7:0] Interrupt (C[7:0]F)

This active high outputs will be asserted by the module to request a timer channel 7 – 0 interrupt. The TIM block only generates the interrupt and does not service it. Only bits related to implemented channels are valid.

23.6.2 Pulse Accumulator Input Interrupt (PAOVI)

This active high output will be asserted by the module to request a timer pulse accumulator input interrupt. The TIM block only generates the interrupt and does not service it.

23.6.3 Pulse Accumulator Overflow Interrupt (PAOVF)

This active high output will be asserted by the module to request a timer pulse accumulator overflow interrupt. The TIM block only generates the interrupt and does not service it.

23.6.4 Timer Overflow Interrupt (TOF)

This active high output will be asserted by the module to request a timer overflow interrupt. The TIM block only generates the interrupt and does not service it.

Chapter 24
16 KByte Flash Module (S12FTMRG16K1V1)

Table 24-1. Revision History

Revision Number	Revision Date	Sections Affected	Description of Changes
V01.04	17 Jun 2010	24.4.6.1/24-795 24.4.6.2/24-796 24.4.6.3/24-796 24.4.6.14/24-806	Clarify Erase Verify Commands Descriptions related to the bits MGSTAT[1:0] of the register FSTAT.
V01.05	20 Aug 2010	24.4.6.2/24-796 24.4.6.12/24-803 24.4.6.13/24-805	Updated description of the commands RD1BLK, MLOADU and MLOADF
V01.06	31 Jan 2011	24.3.2.9/24-781	Updated description of protection on Section 24.3.2.9

24.1 Introduction

The FTMRG16K1 module implements the following:

- 16Kbytes of P-Flash (Program Flash) memory
- 512 bytes of EEPROM memory

The Flash memory is ideal for single-supply applications allowing for field reprogramming without requiring external high voltage sources for program or erase operations. The Flash module includes a memory controller that executes commands to modify Flash memory contents. The user interface to the memory controller consists of the indexed Flash Common Command Object (FCCOB) register which is written to with the command, global address, data, and any required command parameters. The memory controller must complete the execution of a command before the FCCOB register can be written to with a new command.

CAUTION

A Flash word or phrase must be in the erased state before being programmed. Cumulative programming of bits within a Flash word or phrase is not allowed.

The Flash memory may be read as bytes and aligned words. Read access time is one bus cycle for bytes and aligned words. For misaligned words access, the CPU has to perform twice the byte read access command. For Flash memory, an erased bit reads 1 and a programmed bit reads 0.

It is possible to read from P-Flash memory while some commands are executing on EEPROM memory. It is not possible to read from EEPROM memory while a command is executing on P-Flash memory. Simultaneous P-Flash and EEPROM operations are discussed in Section 24.4.5.

Both P-Flash and EEPROM memories are implemented with Error Correction Codes (ECC) that can resolve single bit faults and detect double bit faults. For P-Flash memory, the ECC implementation requires that programming be done on an aligned 8 byte basis (a Flash phrase). Since P-Flash memory is always read by half-phrase, only one single bit fault in an aligned 4 byte half-phrase containing the byte or word accessed will be corrected.

24.1.1 Glossary

Command Write Sequence — An MCU instruction sequence to execute built-in algorithms (including program and erase) on the Flash memory.

EEPROM Memory — The EEPROM memory constitutes the nonvolatile memory store for data.

EEPROM Sector — The EEPROM sector is the smallest portion of the EEPROM memory that can be erased. The EEPROM sector consists of 4 bytes.

NVM Command Mode — An NVM mode using the CPU to setup the FCCOB register to pass parameters required for Flash command execution.

Phrase — An aligned group of four 16-bit words within the P-Flash memory. Each phrase includes two sets of aligned double words with each set including 7 ECC bits for single bit fault correction and double bit fault detection within each double word.

P-Flash Memory — The P-Flash memory constitutes the main nonvolatile memory store for applications.

P-Flash Sector — The P-Flash sector is the smallest portion of the P-Flash memory that can be erased. Each P-Flash sector contains 512 bytes.

Program IFR — Nonvolatile information register located in the P-Flash block that contains the Version ID, and the Program Once field.

24.1.2 Features

24.1.2.1 P-Flash Features

- 16 Kbytes of P-Flash memory composed of one 16 Kbyte Flash block divided into 32 sectors of 512 bytes
- Single bit fault correction and double bit fault detection within a 32-bit double word during read operations
- Automated program and erase algorithm with verify and generation of ECC parity bits

- Fast sector erase and phrase program operation
- Ability to read the P-Flash memory while programming a word in the EEPROM memory
- Flexible protection scheme to prevent accidental program or erase of P-Flash memory

24.1.2.2 EEPROM Features

- 512 bytes of EEPROM memory composed of one 512 byte Flash block divided into 128 sectors of 4 bytes
- Single bit fault correction and double bit fault detection within a word during read operations
- Automated program and erase algorithm with verify and generation of ECC parity bits
- Fast sector erase and word program operation
- Protection scheme to prevent accidental program or erase of EEPROM memory
- Ability to program up to four words in a burst sequence

24.1.2.3 Other Flash Module Features

- No external high-voltage power supply required for Flash memory program and erase operations
- Interrupt generation on Flash command completion and Flash error detection
- Security mechanism to prevent unauthorized access to the Flash memory

24.1.3 Block Diagram

The block diagram of the Flash module is shown in Figure 24-1.

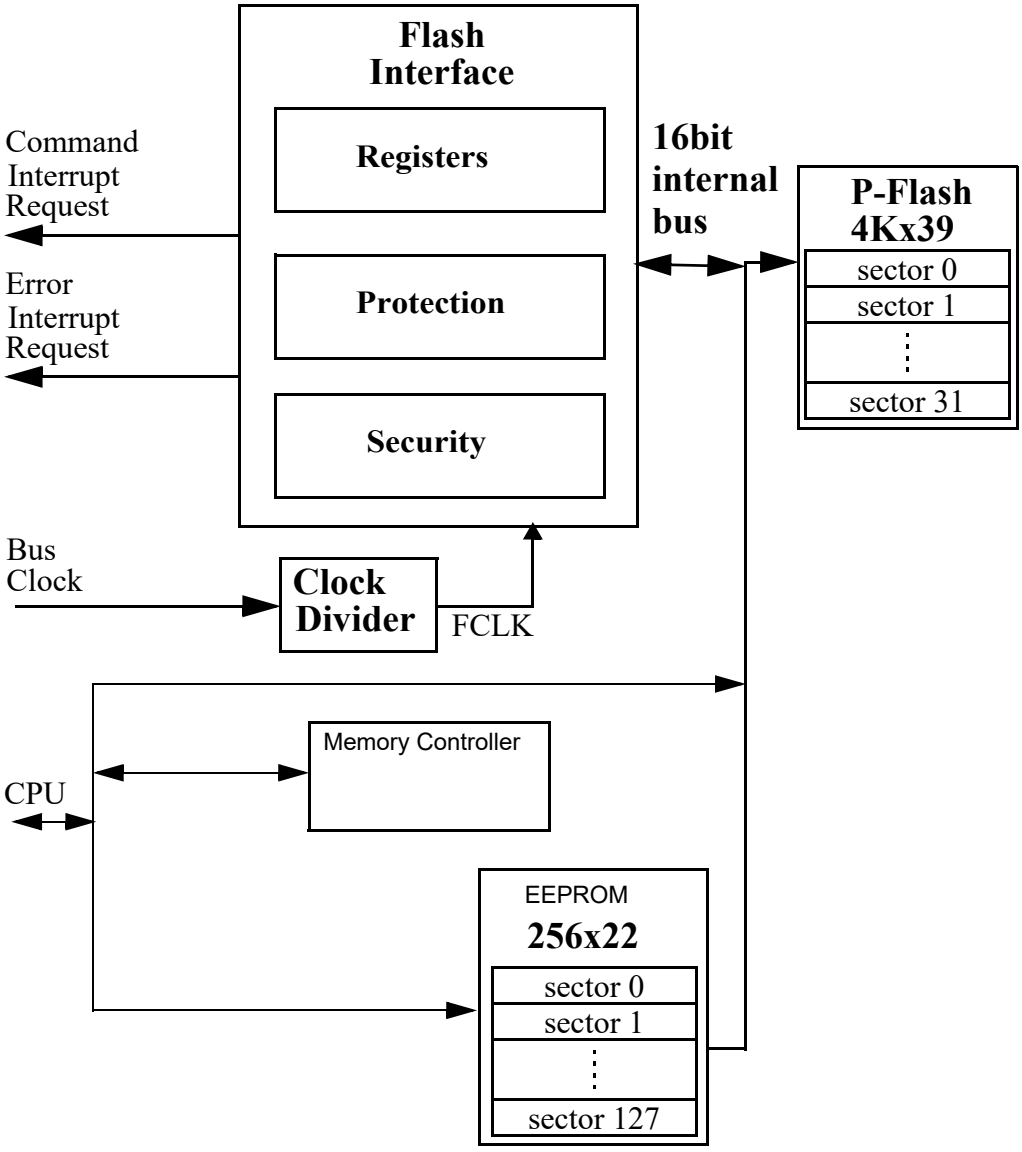

Figure 24-1. FTMRG16K1 Block Diagram

24.2 External Signal Description

The Flash module contains no signals that connect off-chip.

24.3 Memory Map and Registers

This section describes the memory map and registers for the Flash module. Read data from unimplemented memory space in the Flash module is undefined. Write access to unimplemented or reserved memory space in the Flash module will be ignored by the Flash module.

CAUTION

Writing to the Flash registers while a Flash command is executing (that is indicated when the value of flag CCIF reads as ’0’) is not allowed. If such action is attempted the write operation will not change the register value.

Writing to the Flash registers is allowed when the Flash is not busy executing commands (CCIF = 1) and during initialization right after reset, despite the value of flag CCIF in that case (refer to Section 24.6 for a complete description of the reset sequence).

.

Table 24-2. FTMRG Memory Map

Global Address (in Bytes)	Size (Bytes)	Description
0x0_0000 - 0x0_03FF	1,024	Register Space
0x0_0400 – 0x0_05FF	512	EEPROM Memory
0x0_0600 – 0x0_07FF	512	FTMRG reserved area
0x0_4000 – 0x0_7FFF	16,284	NVMRES[1]=1 : NVM Resource area (see Figure 24-3)
0x3_8000 – 0x3_BFFF	16,384	FTMRG reserved area
0x3_C000 – 0x3_FFFF	16,384	P-Flash Memory

1 See NVMRES description in Section 24.4.3

24.3.1 Module Memory Map

The S12 architecture places the P-Flash memory between global addresses 0x3_C000 and 0x3_FFFF as shown in Table 24-3.The P-Flash memory map is shown in Figure 24-2.

Table 24-3. P-Flash Memory Addressing

Global Address	Size (Bytes)	Description
0x3_C000 – 0x3_FFFF	16 K	P-Flash Block Contains Flash Configuration Field (see Table 24-4)

The FPROT register, described in Section 24.3.2.9, can be set to protect regions in the Flash memory from accidental program or erase. Two separate memory regions, one growing downward from global address 0x3_FFFF in the Flash memory (called the higher region), and the remaining addresses in the Flash memory, can be activated for protection. The Flash memory addresses covered by these protectable regions are shown in the P-Flash memory map. The higher address region is mainly targeted to hold the boot loader code since it covers the vector space. Default protection settings as well as security information that allows the MCU to restrict access to the Flash module are stored in the Flash configuration field as described in Table 24-4.

Table 24-4. Flash Configuration Field

Global Address	Size (Bytes)	Description
0x3_FF00-0x3_FF07	8	Backdoor Comparison Key Refer to Section 24.4.6.11, “Verify Backdoor Access Key Command,” and Section 24.5.1, “Unsecuring the MCU using Backdoor Key Access”
0x3_FF08-0x3_FF0B[1]	4	Reserved
0x3_FF0C[1]	1	P-Flash Protection byte. Refer to Section 24.3.2.9, “P-Flash Protection Register (FPROT)”
0x3_FF0D[1]	1	EEPROM Protection byte. Refer to Section 24.3.2.10, “EEPROM Protection Register (EEPROT)”
0x3_FF0E[1]	1	Flash Nonvolatile byte Refer to Section 24.3.2.16, “Flash Option Register (FOPT)”
0x3_FF0F[1]	1	Flash Security byte Refer to Section 24.3.2.2, “Flash Security Register (FSEC)”

1 0x3FF08-0x3_FF0F form a Flash phrase and must be programmed in a single command write sequence. Each byte in the 0x3_FF08 - 0x3_FF0B reserved field should be programmed to 0xFF.

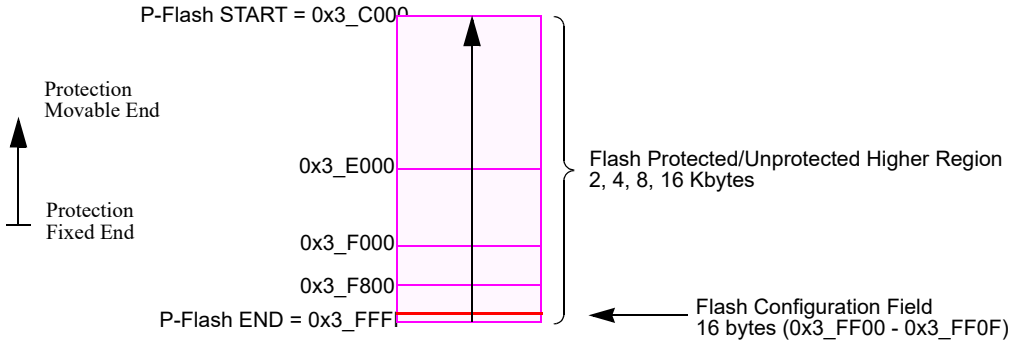

Figure 24-2. P-Flash Memory Map

Table 24-5. Program IFR Fields

Global Address	Size (Bytes)	Field Description
0x0_4000 – 0x0_4007	8	Reserved
0x0_4008 – 0x0_40B5	174	Reserved
0x0_40B6 – 0x0_40B7	2	Version ID[1]
0x0_40B8 – 0x0_40BF	8	Reserved
0x0_40C0 – 0x0_40FF	64	Program Once Field Refer to Section 24.4.6.6, “Program Once Command”

1 Used to track firmware patch versions, see Section 24.4.2

Table 24-6. Memory Controller Resource Fields (NVMRES[1]=1)

Global Address	Size (Bytes)	Description
0x0_4000 – 0x040FF	256	P-Flash IFR (see Table 24-5)
0x0_4100 – 0x0_41FF	256	Reserved.
0x0_4200 – 0x0_57FF		Reserved
0x0_5800 – 0x0_59FF	512	Reserved
0x0_5A00 – 0x0_5FFF	1,536	Reserved
0x0_6000 – 0x0_6BFF	3,072	Reserved
0x0_6C00 – 0x0_7FFF	5,120	Reserved

1 NVMRES - See Section 24.4.3 for NVMRES (NVM Resource) detail.

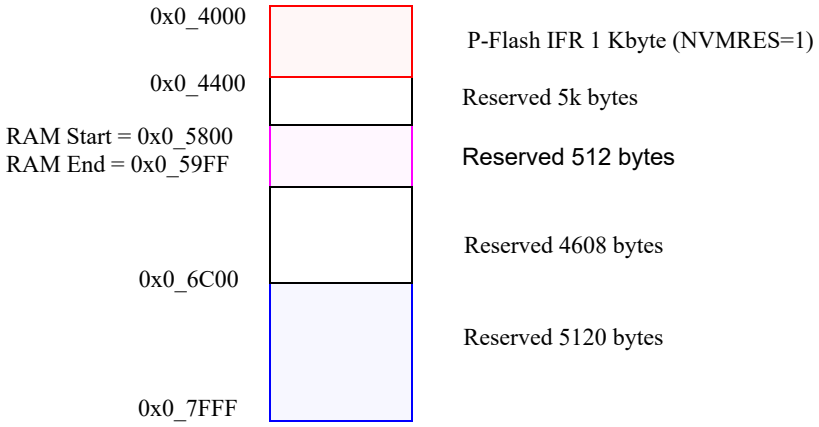

Figure 24-3. Memory Controller Resource Memory Map (NVMRES=1)

24.3.2 Register Descriptions

The Flash module contains a set of 20 control and status registers located between Flash module base + 0x0000 and 0x0013.

In the case of the writable registers, the write accesses are forbidden during Fash command execution (for more detail, see Caution note in Section 24.3).

A summary of the Flash module registers is given in Figure 24-4 with detailed descriptions in the following subsections.

Address & Name		7	6	5	4	3	2	1	0
0x0000 FCLKDIV	R	FDIVLD	FDIVLCK	FDIV5	FDIV4	FDIV3	FDIV2	FDIV1	FDIV0
	W								
0x0001 FSEC	R	KEYEN1	KEYEN0	RNV5	RNV4	RNV3	RNV2	SEC1	SEC0
	W								
0x0002 FCCOBIX	R	0	0	0	0	0	CCOBIX2	CCOBIX1	CCOBIX0
	W								

Figure 24-4. FTMRG16K1 Register Summary

Address & Name		7	6	5	4	3	2	1	0
0x0003 FRSV0	R	0	0	0	0	0	0	0	0
	W								
0x0004 FCNFG	R	CCIE	0	0	IGNSF	0	0	FDFD	FSFD
	W								
0x0005 FERCNFG	R	0	0	0	0	0	0	DFDIE	SFDIE
	W								
0x0006 FSTAT	R	CCIF	0	ACCERR	FPVIOL	MGBUSY	RSVD	MGSTAT1	MGSTAT0
	W								
0x0007 FERSTAT	R	0	0	0	0	0	0	DFDIF	SFDIF
	W								
0x0008 FPROT	R	FPOPEN	RNV6	FPHDIS	FPHS1	FPHS0	RNV2	RNV1	RNV0
	W								
0x0009 EEPROT	R	DPOPEN	0	0	DPS4	DPS3	DPS2	DPS1	DPS0
	W								
0x000A FCCOBHI	R	CCOB15	CCOB14	CCOB13	CCOB12	CCOB11	CCOB10	CCOB9	CCOB8
	W								
0x000B FCCOBLO	R	CCOB7	CCOB6	CCOB5	CCOB4	CCOB3	CCOB2	CCOB1	CCOB0
	W								
0x000C FRSV1	R	0	0	0	0	0	0	0	0
	W								
0x000D FRSV2	R	0	0	0	0	0	0	0	0
	W								
0x000E FRSV3	R	0	0	0	0	0	0	0	0
	W								
0x000F FRSV4	R	0	0	0	0	0	0	0	0
	W								
0x0010 FOPT	R	NV7	NV6	NV5	NV4	NV3	NV2	NV1	NV0
	W								

Figure 24-4. FTMRG16K1 Register Summary (continued)

Address & Name		7	6	5	4	3	2	1	0
0x0011 FRSV5	R	0	0	0	0	0	0	0	0
	W								
0x0012 FRSV6	R	0	0	0	0	0	0	0	0
	W								
0x0013 FRSV7	R	0	0	0	0	0	0	0	0
	W								

= Unimplemented or Reserved

Figure 24-4. FTMRG16K1 Register Summary (continued)

24.3.2.1 Flash Clock Divider Register (FCLKDIV)

The FCLKDIV register is used to control timed events in program and erase algorithms.

Offset Module Base + 0x0000

	7	6	5	4	3	2	1	0
R	FDIVLD	FDIVLCK	FDIV[5:0]					
W								
Reset	0	0	0	0	0	0	0	0

= Unimplemented or Reserved

Figure 24-5. Flash Clock Divider Register (FCLKDIV)

All bits in the FCLKDIV register are readable, bit 7 is not writable, bit 6 is write-once-hi and controls the writability of the FDIV field in normal mode. In special mode, bits 6-0 are writable any number of times but bit 7 remains unwritable.

CAUTION

The FCLKDIV register should never be written while a Flash command is executing (CCIF=0).

Table 24-7. FCLKDIV Field Descriptions

Field	Description
7 FDIVLD	Clock Divider Loaded 0 FCLKDIV register has not been written since the last reset 1 FCLKDIV register has been written since the last reset

Table 24-7. FCLKDIV Field Descriptions (continued)

Field	Description
6 FDIVLCK	Clock Divider Locked 0 FDIV field is open for writing 1 FDIV value is locked and cannot be changed. Once the lock bit is set high, only reset can clear this bit and restore writability to the FDIV field in normal mode.
5–0 FDIV[5:0]	**Clock Divider Bits** — FDIV[5:0] must be set to effectively divide BUSCLK down to 1 MHz to control timed events during Flash program and erase algorithms. Table 24-8 shows recommended values for FDIV[5:0] based on the BUSCLK frequency. Please refer to Section 24.4.4, “Flash Command Operations,” for more information.

Table 24-8. FDIV values for various BUSCLK Frequencies

BUSCLK Frequency (MHz)		FDIV[5:0]	BUSCLK Frequency (MHz)		FDIV[5:0]
MIN[1]	MAX[2]		MIN[1]	MAX[2]	
1.0	1.6	0x00	16.6	17.6	0x10
1.6	2.6	0x01	17.6	18.6	0x11
2.6	3.6	0x02	18.6	19.6	0x12
3.6	4.6	0x03	19.6	20.6	0x13
4.6	5.6	0x04	20.6	21.6	0x14
5.6	6.6	0x05	21.6	22.6	0x15
6.6	7.6	0x06	22.6	23.6	0x16
7.6	8.6	0x07	23.6	24.6	0x17
8.6	9.6	0x08	24.6	25.6	0x18
9.6	10.6	0x09			
10.6	11.6	0x0A			
11.6	12.6	0x0B			
12.6	13.6	0x0C			
13.6	14.6	0x0D			
14.6	15.6	0x0E			
15.6	16.6	0x0F			

1 BUSCLK is Greater Than this value.

2 BUSCLK is Less Than or Equal to this value.

24.3.2.2 Flash Security Register (FSEC)

The FSEC register holds all bits associated with the security of the MCU and Flash module.

Offset Module Base + 0x0001

	7	6	5	4	3	2	1	0
R	KEYEN[1:0]		RNV[5:2]				SEC[1:0]	
W								
Reset	F[1]	F[1]	F[1]	F[1]	F[1]	F[1]	F[1]	F[1]

= Unimplemented or Reserved

Figure 24-6. Flash Security Register (FSEC)

[1] Loaded from IFR Flash configuration field, during reset sequence.

All bits in the FSEC register are readable but not writable.

During the reset sequence, the FSEC register is loaded with the contents of the Flash security byte in the Flash configuration field at global address 0x3_FF0F located in P-Flash memory (see Table 24-4) as indicated by reset condition F in Figure 24-6. If a double bit fault is detected while reading the P-Flash phrase containing the Flash security byte during the reset sequence, all bits in the FSEC register will be set to leave the Flash module in a secured state with backdoor key access disabled.

Table 24-9. FSEC Field Descriptions

Field	Description
7–6 KEYEN[1:0]	**Backdoor Key Security Enable Bits** — The KEYEN[1:0] bits define the enabling of backdoor key access to the Flash module as shown in Table 24-10.
5–2 RNV[5:2]	**Reserved Nonvolatile Bits** — The RNV bits should remain in the erased state for future enhancements.
1–0 SEC[1:0]	**Flash Security Bits** — The SEC[1:0] bits define the security state of the MCU as shown in Table 24-11. If the Flash module is unsecured using backdoor key access, the SEC bits are forced to 10.

Table 24-10. Flash KEYEN States

KEYEN[1:0]	Status of Backdoor Key Access
00	DISABLED
01	DISABLED[1]
10	ENABLED
11	DISABLED

[1] Preferred KEYEN state to disable backdoor key access.

Table 24-11. Flash Security States

SEC[1:0]	Status of Security
00	SECURED
01	SECURED[1]
10	UNSECURED
11	SECURED

[1] Preferred SEC state to set MCU to secured state.

The security function in the Flash module is described in Section 24.5.

24.3.2.3 Flash CCOB Index Register (FCCOBIX)

The FCCOBIX register is used to index the FCCOB register for Flash memory operations.

Offset Module Base + 0x0002

	7	6	5	4	3	2	1	0
R	0	0	0	0	0	CCOBIX[2:0]		
W								
Reset	0	0	0	0	0	0	0	0

= Unimplemented or Reserved

Figure 24-7. FCCOB Index Register (FCCOBIX)

CCOBIX bits are readable and writable while remaining bits read 0 and are not writable.

Table 24-12. FCCOBIX Field Descriptions

Field	Description
2–0 CCOBIX[1:0]	**Common Command Register Index**— The CCOBIX bits are used to select which word of the FCCOB register array is being read or written to. See 24.3.2.11 Flash Common Command Object Register (FCCOB),” for more details.

24.3.2.4 Flash Reserved0 Register (FRSV0)

This Flash register is reserved for factory testing.

Offset Module Base + 0x000C

	7	6	5	4	3	2	1	0
R	0	0	0	0	0	0	0	0
W								
Reset	0	0	0	0	0	0	0	0

= Unimplemented or Reserved

Figure 24-8. Flash Reserved0 Register (FRSV0)

All bits in the FRSV0 register read 0 and are not writable.

24.3.2.5 Flash Configuration Register (FCNFG)

The FCNFG register enables the Flash command complete interrupt and forces ECC faults on Flash array read access from the CPU.

Offset Module Base + 0x0004

	7	6	5	4	3	2	1	0
R	CCIE	0	0	IGNSF	0	0	FDFD	FSFD
W								
Reset	0	0	0	0	0	0	0	0

= Unimplemented or Reserved

Figure 24-9. Flash Configuration Register (FCNFG)

CCIE, IGNSF, FDFD, and FSFD bits are readable and writable while remaining bits read 0 and are not writable.

Table 24-13. FCNFG Field Descriptions

Field	Description
7 CCIE	**Command Complete Interrupt Enable** — The CCIE bit controls interrupt generation when a Flash command has completed. 0 Command complete interrupt disabled 1 An interrupt will be requested whenever the CCIF flag in the FSTAT register is set (see Section 24.3.2.7)
4 IGNSF	**Ignore Single Bit Fault** — The IGNSF controls single bit fault reporting in the FERSTAT register (see Section 24.3.2.8). 0 All single bit faults detected during array reads are reported 1 Single bit faults detected during array reads are not reported and the single bit fault interrupt will not be generated
1 FDFD	**Force Double Bit Fault Detect** — The FDFD bit allows the user to simulate a double bit fault during Flash array read operations and check the associated interrupt routine. The FDFD bit is cleared by writing a 0 to FDFD. 0 Flash array read operations will set the DFDIF flag in the FERSTAT register only if a double bit fault is detected 1 Any Flash array read operation will force the DFDIF flag in the FERSTAT register to be set (see Section 24.3.2.7) and an interrupt will be generated as long as the DFDIE interrupt enable in the FERCNFG register is set (see Section 24.3.2.6)
0 FSFD	**Force Single Bit Fault Detect** — The FSFD bit allows the user to simulate a single bit fault during Flash array read operations and check the associated interrupt routine. The FSFD bit is cleared by writing a 0 to FSFD. 0 Flash array read operations will set the SFDIF flag in the FERSTAT register only if a single bit fault is detected 1 Flash array read operation will force the SFDIF flag in the FERSTAT register to be set (see Section 24.3.2.7) and an interrupt will be generated as long as the SFDIE interrupt enable in the FERCNFG register is set (see Section 24.3.2.6)

24.3.2.6 Flash Error Configuration Register (FERCNFG)

The FERCNFG register enables the Flash error interrupts for the FERSTAT flags.

Offset Module Base + 0x0005

	7	6	5	4	3	2	1	0
R	0	0	0	0	0	0	DFDIE	SFDIE
W								
Reset	0	0	0	0	0	0	0	0

= Unimplemented or Reserved

Figure 24-10. Flash Error Configuration Register (FERCNFG)

All assigned bits in the FERCNFG register are readable and writable.

Table 24-14. FERCNFG Field Descriptions

Field	Description
1 DFDIE	**Double Bit Fault Detect Interrupt Enable** — The DFDIE bit controls interrupt generation when a double bit fault is detected during a Flash block read operation. 0 DFDIF interrupt disabled 1 An interrupt will be requested whenever the DFDIF flag is set (see Section 24.3.2.8)
0 SFDIE	**Single Bit Fault Detect Interrupt Enable** — The SFDIE bit controls interrupt generation when a single bit fault is detected during a Flash block read operation. 0 SFDIF interrupt disabled whenever the SFDIF flag is set (see Section 24.3.2.8) 1 An interrupt will be requested whenever the SFDIF flag is set (see Section 24.3.2.8)

24.3.2.7 Flash Status Register (FSTAT)

The FSTAT register reports the operational status of the Flash module.

Offset Module Base + 0x0006

	7	6	5	4	3	2	1	0
R	CCIF	0	ACCERR	FPVIOL	MGBUSY	RSVD	MGSTAT[1:0]	
W								
Reset	1	0	0	0	0	0	0[1]	0[1]

= Unimplemented or Reserved

Figure 24-11. Flash Status Register (FSTAT)

[1] Reset value can deviate from the value shown if a double bit fault is detected during the reset sequence (see Section 24.6).

CCIF, ACCERR, and FPVIOL bits are readable and writable, MGBUSY and MGSTAT bits are readable but not writable, while remaining bits read 0 and are not writable.

Table 24-15. FSTAT Field Descriptions

Field	Description
7 CCIF	**Command Complete Interrupt Flag** — The CCIF flag indicates that a Flash command has completed. The CCIF flag is cleared by writing a 1 to CCIF to launch a command and CCIF will stay low until command completion or command violation. 0 Flash command in progress 1 Flash command has completed
5 ACCERR	**Flash Access Error Flag** — The ACCERR bit indicates an illegal access has occurred to the Flash memory caused by either a violation of the command write sequence (see Section 24.4.4.2) or issuing an illegal Flash command. While ACCERR is set, the CCIF flag cannot be cleared to launch a command. The ACCERR bit is cleared by writing a 1 to ACCERR. Writing a 0 to the ACCERR bit has no effect on ACCERR. 0 No access error detected 1 Access error detected
4 FPVIOL	**Flash Protection Violation Flag** —The FPVIOL bit indicates an attempt was made to program or erase an address in a protected area of P-Flash or EEPROM memory during a command write sequence. The FPVIOL bit is cleared by writing a 1 to FPVIOL. Writing a 0 to the FPVIOL bit has no effect on FPVIOL. While FPVIOL is set, it is not possible to launch a command or start a command write sequence. 0 No protection violation detected 1 Protection violation detected
3 MGBUSY	**Memory Controller Busy Flag** — The MGBUSY flag reflects the active state of the Memory Controller. 0 Memory Controller is idle 1 Memory Controller is busy executing a Flash command (CCIF = 0)
2 RSVD	**Reserved Bit** — This bit is reserved and always reads 0.
1–0 MGSTAT[1:0]	**Memory Controller Command Completion Status Flag** — One or more MGSTAT flag bits are set if an error is detected during execution of a Flash command or during the Flash reset sequence. See Section 24.4.6, “Flash Command Description,” and Section 24.6, “Initialization” for details.

24.3.2.8 Flash Error Status Register (FERSTAT)

The FERSTAT register reflects the error status of internal Flash operations.

Offset Module Base + 0x0007

	7	6	5	4	3	2	1	0
R	0	0	0	0	0	0	DFDIF	SFDIF
W								
Reset	0	0	0	0	0	0	0	0

= Unimplemented or Reserved

Figure 24-12. Flash Error Status Register (FERSTAT)

All flags in the FERSTAT register are readable and only writable to clear the flag.

Table 24-16. FERSTAT Field Descriptions

Field	Description
1 DFDIF	**Double Bit Fault Detect Interrupt Flag** — The setting of the DFDIF flag indicates that a double bit fault was detected in the stored parity and data bits during a Flash array read operation or that a Flash array read operation returning invalid data was attempted on a Flash block that was under a Flash command operation.[1] The DFDIF flag is cleared by writing a 1 to DFDIF. Writing a 0 to DFDIF has no effect on DFDIF.[2] 0 No double bit fault detected 1 Double bit fault detected or a Flash array read operation returning invalid data was attempted while command running
0 SFDIF	**Single Bit Fault Detect Interrupt Flag** — With the IGNSF bit in the FCNFG register clear, the SFDIF flag indicates that a single bit fault was detected in the stored parity and data bits during a Flash array read operation or that a Flash array read operation returning invalid data was attempted on a Flash block that was under a Flash command operation.[1] The SFDIF flag is cleared by writing a 1 to SFDIF. Writing a 0 to SFDIF has no effect on SFDIF. 0 No single bit fault detected 1 Single bit fault detected and corrected or a Flash array read operation returning invalid data was attempted while command running

1 The single bit fault and double bit fault flags are mutually exclusive for parity errors (an ECC fault occurrence can be either single fault or double fault but never both). A simultaneous access collision (Flash array read operation returning invalid data attempted while command running) is indicated when both SFDIF and DFDIF flags are high.

2 There is a one cycle delay in storing the ECC DFDIF and SFDIF fault flags in this register. At least one NOP is required after a flash memory read before checking FERSTAT for the occurrence of ECC errors.

24.3.2.9 P-Flash Protection Register (FPROT)

The FPROT register defines which P-Flash sectors are protected against program and erase operations.

Offset Module Base + 0x0008

	7	6	5	4	3	2	1	0
R	FPOPEN	RNV6	FPHDIS	FPHS[1:0]		RNV[2:0]		
W								
Reset	F[1]	F[1]	F[1]	F[1]	F[1]	F[1]	F[1]	F[1]

= Unimplemented or Reserved

Figure 24-13. Flash Protection Register (FPROT)

1 Loaded from IFR Flash configuration field, during reset sequence.

The (unreserved) bits of the FPROT register are writable with the restriction that the size of the protected region can only be increased. While the RNV[2:0] bits are writable, they should be left in an erased state.

During the reset sequence, the FPROT register is loaded with the contents of the P-Flash protection byte in the Flash configuration field at global address 0x3_FF0C located in P-Flash memory (see Table 24-4) as indicated by reset condition ‘F’ in Figure 24-13. To change the P-Flash protection that will be loaded during the reset sequence, the upper sector of the P-Flash memory must be unprotected, then the P-Flash protection byte must be reprogrammed. If a double bit fault is detected while reading the P-Flash phrase containing the P-Flash protection byte during the reset sequence, the FPOPEN bit will be cleared and remaining bits in the FPROT register will be set to leave the P-Flash memory fully protected.

Trying to alter data in any protected area in the P-Flash memory will result in a protection violation error and the FPVIOL bit will be set in the FSTAT register. The block erase of a P-Flash block is not possible if any of the P-Flash sectors contained in the same P-Flash block are protected.

Table 24-17. FPROT Field Descriptions

Field	Description
7 FPOPEN	**Flash Protection Operation Enable** — The FPOPEN bit determines the protection function for program or erase operations as shown in Table 24-18 for the P-Flash block. 0 When FPOPEN is clear, the FPHDIS bit defines an unprotected address range as specified by the FPHS bits 1 When FPOPEN is set, the FPHDIS bit enables protection for the address range specified by the FPHS bits
6 RNV[6]	**Reserved Nonvolatile Bit** — The RNV bit should remain in the erased state for future enhancements.
5 FPHDIS	**Flash Protection Higher Address Range Disable** — The FPHDIS bit determines whether there is a protected/unprotected area in a specific region of the P-Flash memory ending with global address 0x3_FFFF. 0 Protection/Unprotection enabled 1 Protection/Unprotection disabled
4–3 FPHS[1:0]	**Flash Protection Higher Address Size** — The FPHS bits determine the size of the protected/unprotected area in P-Flash memory as shown inTable 24-19. The FPHS bits can only be written to while the FPHDIS bit is set.
2–0 RNV[2:0]	**Reserved Nonvolatile Bits** — These RNV bits should remain in the erased state.

Table 24-18. P-Flash Protection Function

FPOPEN	FPHDIS	Function[1]
1	1	No P-Flash Protection
1	0	Protected High Range
0	1	Full P-Flash Memory Protected
0	0	Unprotected High Range

[1] For range sizes, refer to Table 24-19.

Table 24-19. P-Flash Protection Higher Address Range

FPHS[1:0]	Global Address Range	Protected Size
00	0x3_F800–0x3_FFFF	2 Kbytes
01	0x3_F000–0x3_FFFF	4 Kbytes
10	0x3_E000–0x3_FFFF	8 Kbytes
11	0x3_C000–0x3_FFFF	16 Kbytes

Although the protection scheme is loaded from the Flash memory at global address 0x3_FF0C during the reset sequence, it can be changed by the user. The P-Flash protection scheme can be used by applications requiring reprogramming in single chip mode while providing as much protection as possible if reprogramming is not required.

24.3.2.10 EEPROM Protection Register (EEPROT)

The EEPROT register defines which EEPROM sectors are protected against program and erase operations.

Offset Module Base + 0x0009

	7	6	5	4	3	2	1	0
R	DPOPEN	0	0	DPS[4:0]				
W								
Reset	F[1]	0	0	F[1]	F[1]	F[1]	F[1]	F[1]

= Unimplemented or Reserved

Figure 24-14. EEPROM Protection Register (EEPROT)

1 Loaded from IFR Flash configuration field, during reset sequence.

The (unreserved) bits of the EEPROT register are writable with the restriction that protection can be added but not removed. Writes must increase the DPS value and the DPOPEN bit can only be written from 1 (protection disabled) to 0 (protection enabled). If the DPOPEN bit is set, the state of the DPS bits is irrelevant.

During the reset sequence, fields DPOPEN and DPS of the EEPROT register are loaded with the contents of the EEPROM protection byte in the Flash configuration field at global address 0x3_FF0D located in P-Flash memory (see Table 24-4) as indicated by reset condition F in Table 24-21. To change the EEPROM protection that will be loaded during the reset sequence, the P-Flash sector containing the EEPROM protection byte must be unprotected, then the EEPROM protection byte must be programmed. If a double bit fault is detected while reading the P-Flash phrase containing the EEPROM protection byte during the reset sequence, the DPOPEN bit will be cleared and DPS bits will be set to leave the EEPROM memory fully protected.

Trying to alter data in any protected area in the EEPROM memory will result in a protection violation error and the FPVIOL bit will be set in the FSTAT register. Block erase of the EEPROM memory is not possible if any of the EEPROM sectors are protected.

Table 24-20. EEPROT Field Descriptions

Field	Description
7 DPOPEN	EEPROM Protection Control 0 Enables EEPROM memory protection from program and erase with protected address range defined by DPS bits 1 Disables EEPROM memory protection from program and erase
4–0 DPS[4:0]	**EEPROM Protection Size** — The DPS[4:0] bits determine the size of the protected area in the EEPROM memory as shown inTable 24-21 .

Table 24-21. EEPROM Protection Address Range

DPS[4:0]	Global Address Range	Protected Size
00000	0x0_0400 – 0x0_041F	32 bytes
00001	0x0_0400 – 0x0_043F	64 bytes
00010	0x0_0400 – 0x0_045F	96 bytes
00011	0x0_0400 – 0x0_047F	128 bytes
00100	0x0_0400 – 0x0_049F	160 bytes
00101	0x0_0400 – 0x0_04BF	192 bytes
The Protection Size goes on enlarging in step of 32 bytes, for each DPS value increasing of one. . . .		
01111 - to - 11111	0x0_0400 – 0x0_05FF	512 bytes

24.3.2.11 Flash Common Command Object Register (FCCOB)

The FCCOB is an array of six words addressed via the CCOBIX index found in the FCCOBIX register. Byte wide reads and writes are allowed to the FCCOB register.

Offset Module Base + 0x000A

	7	6	5	4	3	2	1	0
R W	CCOB[15:8]							
Reset	0	0	0	0	0	0	0	0

Figure 24-15. Flash Common Command Object High Register (FCCOBHI)

Offset Module Base + 0x000B

	7	6	5	4	3	2	1	0
R W	CCOB[7:0]							
Reset	0	0	0	0	0	0	0	0

Figure 24-16. Flash Common Command Object Low Register (FCCOBLO)

24.3.2.11.1 FCCOB - NVM Command Mode

NVM command mode uses the indexed FCCOB register to provide a command code and its relevant parameters to the Memory Controller. The user first sets up all required FCCOB fields and then initiates

the command's execution by writing a 1 to the CCIF bit in the FSTAT register (a 1 written by the user clears the CCIF command completion flag to 0). When the user clears the CCIF bit in the FSTAT register all FCCOB parameter fields are locked and cannot be changed by the user until the command completes (as evidenced by the Memory Controller returning CCIF to 1). Some commands return information to the FCCOB register array.

The generic format for the FCCOB parameter fields in NVM command mode is shown in Table 24-22. The return values are available for reading after the CCIF flag in the FSTAT register has been returned to 1 by the Memory Controller. Writes to the unimplemented parameter fields (CCOBIX = 110 and CCOBIX = 111) are ignored with reads from these fields returning 0x0000.

Table 24-22 shows the generic Flash command format. The high byte of the first word in the CCOB array contains the command code, followed by the parameters for this specific Flash command. For details on the FCCOB settings required by each command, see the Flash command descriptions in Section 24.4.6.

Table 24-22. FCCOB - NVM Command Mode (Typical Usage)

CCOBIX[2:0]	Byte	FCCOB Parameter Fields (NVM Command Mode)
000	HI	FCMD[7:0] defining Flash command
	LO	6'h0, Global address [17:16]
001	HI	Global address [15:8]
	LO	Global address [7:0]
010	HI	Data 0 [15:8]
	LO	Data 0 [7:0]
011	HI	Data 1 [15:8]
	LO	Data 1 [7:0]
100	HI	Data 2 [15:8]
	LO	Data 2 [7:0]
101	HI	Data 3 [15:8]
	LO	Data 3 [7:0]

24.3.2.12 Flash Reserved1 Register (FRSV1)

This Flash register is reserved for factory testing.

Offset Module Base + 0x000C

	7	6	5	4	3	2	1	0
R	0	0	0	0	0	0	0	0
W								
Reset	0	0	0	0	0	0	0	0

= Unimplemented or Reserved

Figure 24-17. Flash Reserved1 Register (FRSV1)

All bits in the FRSV1 register read 0 and are not writable.

24.3.2.13 Flash Reserved2 Register (FRSV2)

This Flash register is reserved for factory testing.

Offset Module Base + 0x000D

	7	6	5	4	3	2	1	0
R	0	0	0	0	0	0	0	0
W								
Reset	0	0	0	0	0	0	0	0

= Unimplemented or Reserved

Figure 24-18. Flash Reserved2 Register (FRSV2)

All bits in the FRSV2 register read 0 and are not writable.

24.3.2.14 Flash Reserved3 Register (FRSV3)

This Flash register is reserved for factory testing.

Offset Module Base + 0x000E

	7	6	5	4	3	2	1	0
R	0	0	0	0	0	0	0	0
W								
Reset	0	0	0	0	0	0	0	0

= Unimplemented or Reserved

Figure 24-19. Flash Reserved3 Register (FRSV3)

All bits in the FRSV3 register read 0 and are not writable.

24.3.2.15 Flash Reserved4 Register (FRSV4)

This Flash register is reserved for factory testing.

Offset Module Base + 0x000F

	7	6	5	4	3	2	1	0
R	0	0	0	0	0	0	0	0
W								
Reset	0	0	0	0	0	0	0	0

= Unimplemented or Reserved

Figure 24-20. Flash Reserved4 Register (FRSV4)

All bits in the FRSV4 register read 0 and are not writable.

24.3.2.16 Flash Option Register (FOPT)

The FOPT register is the Flash option register.

Offset Module Base + 0x0010

	7	6	5	4	3	2	1	0
R	NV[7:0]							
W								
Reset	F[1]	F[1]	F[1]	F[1]	F[1]	F[1]	F[1]	F[1]

= Unimplemented or Reserved

Figure 24-21. Flash Option Register (FOPT)

1 Loaded from IFR Flash configuration field, during reset sequence.

All bits in the FOPT register are readable but are not writable.

During the reset sequence, the FOPT register is loaded from the Flash nonvolatile byte in the Flash configuration field at global address 0x3_FF0E located in P-Flash memory (see Table 24-4) as indicated by reset condition F in Figure 24-21. If a double bit fault is detected while reading the P-Flash phrase containing the Flash nonvolatile byte during the reset sequence, all bits in the FOPT register will be set.

Table 24-23. FOPT Field Descriptions

Field	Description
7–0 NV[7:0]	**Nonvolatile Bits** — The NV[7:0] bits are available as nonvolatile bits. Refer to the device user guide for proper use of the NV bits.

24.3.2.17 Flash Reserved5 Register (FRSV5)

This Flash register is reserved for factory testing.

Offset Module Base + 0x0011

	7	6	5	4	3	2	1	0
R	0	0	0	0	0	0	0	0
W								
Reset	0	0	0	0	0	0	0	0

= Unimplemented or Reserved

Figure 24-22. Flash Reserved5 Register (FRSV5)

All bits in the FRSV5 register read 0 and are not writable.

24.3.2.18 Flash Reserved6 Register (FRSV6)

This Flash register is reserved for factory testing.

Offset Module Base + 0x0012

	7	6	5	4	3	2	1	0
R	0	0	0	0	0	0	0	0
W								
Reset	0	0	0	0	0	0	0	0

= Unimplemented or Reserved

Figure 24-23. Flash Reserved6 Register (FRSV6)

All bits in the FRSV6 register read 0 and are not writable.

24.3.2.19 Flash Reserved7 Register (FRSV7)

This Flash register is reserved for factory testing.

Offset Module Base + 0x0013

	7	6	5	4	3	2	1	0
R	0	0	0	0	0	0	0	0
W								
Reset	0	0	0	0	0	0	0	0

= Unimplemented or Reserved

Figure 24-24. Flash Reserved7 Register (FRSV7)

All bits in the FRSV7 register read 0 and are not writable.

24.4 Functional Description

24.4.1 Modes of Operation

The FTMRG16K1 module provides the modes of operation normal and special . The operating mode is determined by module-level inputs and affects the FCLKDIV, FCNFG, and EEPROT registers (see Table 24-25).

24.4.2 IFR Version ID Word

The version ID word is stored in the IFR at address 0x0_40B6. The contents of the word are defined in Table 24-24.

Table 24-24. IFR Version ID Fields

[15:4]	[3:0]
Reserved	VERNUM

- VERNUM: Version number. The first version is number 0b_0001 with both 0b_0000 and 0b_1111 meaning ‘none’.

24.4.3 Internal NVM resource (NVMRES)

IFR is an internal NVM resource readable by CPU , when NVMRES is active. The IFR fields are shown in Table 24-5.

The NVMRES global address map is shown in Table 24-6.

24.4.4 Flash Command Operations

Flash command operations are used to modify Flash memory contents.

The next sections describe:

- How to write the FCLKDIV register that is used to generate a time base (FCLK) derived from BUSCLK for Flash program and erase command operations
- The command write sequence used to set Flash command parameters and launch execution
- Valid Flash commands available for execution, according to MCU functional mode and MCU security state.

24.4.4.1 Writing the FCLKDIV Register

Prior to issuing any Flash program or erase command after a reset, the user is required to write the FCLKDIV register to divide BUSCLK down to a target FCLK of 1 MHz. Table 24-8 shows recommended values for the FDIV field based on BUSCLK frequency.

NOTE

Programming or erasing the Flash memory cannot be performed if the bus clock runs at less than 0.8 MHz. Setting FDIV too high can destroy the Flash memory due to overstress. Setting FDIV too low can result in incomplete programming or erasure of the Flash memory cells.

When the FCLKDIV register is written, the FDIVLD bit is set automatically. If the FDIVLD bit is 0, the FCLKDIV register has not been written since the last reset. If the FCLKDIV register has not been written, any Flash program or erase command loaded during a command write sequence will not execute and the ACCERR bit in the FSTAT register will set.

24.4.4.2 Command Write Sequence

The Memory Controller will launch all valid Flash commands entered using a command write sequence.

Before launching a command, the ACCERR and FPVIOL bits in the FSTAT register must be clear (see Section 24.3.2.7) and the CCIF flag should be tested to determine the status of the current command write sequence. If CCIF is 0, the previous command write sequence is still active, a new command write sequence cannot be started, and all writes to the FCCOB register are ignored.

24.4.4.2.1 Define FCCOB Contents

The FCCOB parameter fields must be loaded with all required parameters for the Flash command being executed. Access to the FCCOB parameter fields is controlled via the CCOBIX bits in the FCCOBIX register (see Section 24.3.2.3).

The contents of the FCCOB parameter fields are transferred to the Memory Controller when the user clears the CCIF command completion flag in the FSTAT register (writing 1 clears the CCIF to 0). The CCIF flag will remain clear until the Flash command has completed. Upon completion, the Memory Controller will return CCIF to 1 and the FCCOB register will be used to communicate any results. The flow for a generic command write sequence is shown in Figure 24-25.

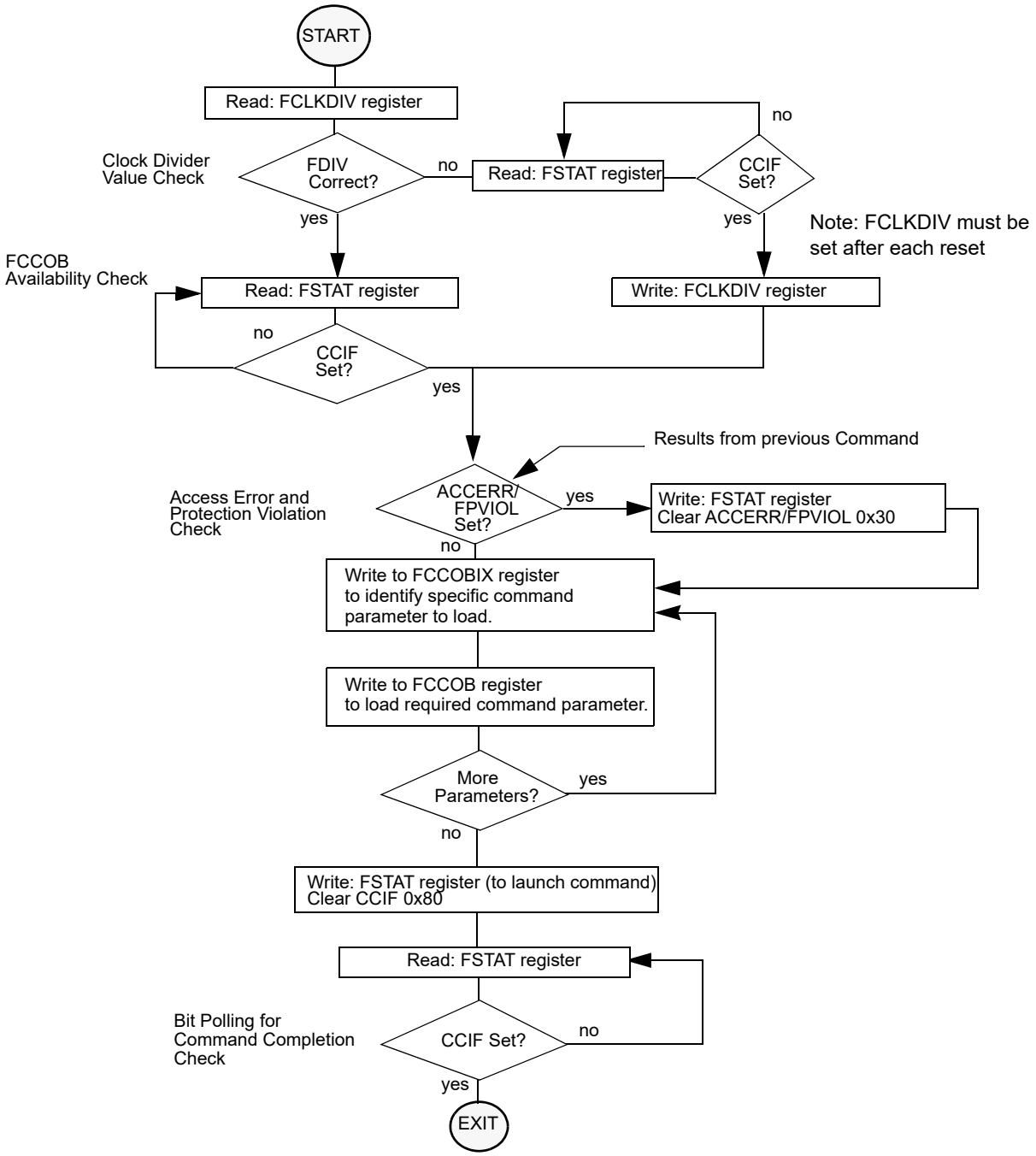

Figure 24-25. Generic Flash Command Write Sequence Flowchart

24.4.4.3 Valid Flash Module Commands

Table 24-25 present the valid Flash commands, as enabled by the combination of the functional MCU mode (Normal SingleChip NS, Special Singlechip SS) with the MCU security state (Unsecured, Secured).

Special Singlechip mode is selected by input mmc_ss_mode_ts2 asserted. MCU Secured state is selected by input mmc_secure input asserted.

Table 24-25. Flash Commands by Mode and Security State

FCMD	Command	Unsecured		Secured	
		NS[1]	SS[2]	NS[3]	SS[4]
0x01	Erase Verify All Blocks	*	*	*	*
0x02	Erase Verify Block	*	*	*	*
0x03	Erase Verify P-Flash Section	*	*	*	
0x04	Read Once	*	*	*	
0x06	Program P-Flash	*	*	*	
0x07	Program Once	*	*	*	
0x08	Erase All Blocks		*		*
0x09	Erase Flash Block	*	*	*	
0x0A	Erase P-Flash Sector	*	*	*	
0x0B	Unsecure Flash		*		*
0x0C	Verify Backdoor Access Key	*		*	
0x0D	Set User Margin Level	*	*	*	
0x0E	Set Field Margin Level		*		
0x10	Erase Verify EEPROM Section	*	*	*	
0x11	Program EEPROM	*	*	*	
0x12	Erase EEPROM Sector	*	*	*	

1 Unsecured Normal Single Chip mode
2 Unsecured Special Single Chip mode.
3 Secured Normal Single Chip mode.
4 Secured Special Single Chip mode.

24.4.4.4 P-Flash Commands

Table 24-26 summarizes the valid P-Flash commands along with the effects of the commands on the P-Flash block and other resources within the Flash module.

Table 24-26. P-Flash Commands

FCMD	Command	Function on P-Flash Memory
0x01	Erase Verify All Blocks	Verify that all P-Flash (and EEPROM) blocks are erased.

Table 24-26. P-Flash Commands

FCMD	Command	Function on P-Flash Memory
0x02	Erase Verify Block	Verify that a P-Flash block is erased.
0x03	Erase Verify P-Flash Section	Verify that a given number of words starting at the address provided are erased.
0x04	Read Once	Read a dedicated 64 byte field in the nonvolatile information register in P-Flash block that was previously programmed using the Program Once command.
0x06	Program P-Flash	Program a phrase in a P-Flash block.
0x07	Program Once	Program a dedicated 64 byte field in the nonvolatile information register in P-Flash block that is allowed to be programmed only once.
0x08	Erase All Blocks	Erase all P-Flash (and EEPROM) blocks. An erase of all Flash blocks is only possible when the FPLDIS, FPHDIS, and FPOPEN bits in the FPROT register and the DPOPEN bit in the EEPROT register are set prior to launching the command.
0x09	Erase Flash Block	Erase a P-Flash (or EEPROM) block. An erase of the full P-Flash block is only possible when FPLDIS, FPHDIS and FPOPEN bits in the FPROT register are set prior to launching the command.
0x0A	Erase P-Flash Sector	Erase all bytes in a P-Flash sector.
0x0B	Unsecure Flash	Supports a method of releasing MCU security by erasing all P-Flash (and EEPROM) blocks and verifying that all P-Flash (and EEPROM) blocks are erased.
0x0C	Verify Backdoor Access Key	Supports a method of releasing MCU security by verifying a set of security keys.
0x0D	Set User Margin Level	Specifies a user margin read level for all P-Flash blocks.
0x0E	Set Field Margin Level	Specifies a field margin read level for all P-Flash blocks (special modes only).

24.4.4.5 EEPROM Commands

Table 24-27 summarizes the valid EEPROM commands along with the effects of the commands on the EEPROM block.

Table 24-27. EEPROM Commands

FCMD	Command	Function on EEPROM Memory
0x01	Erase Verify All Blocks	Verify that all EEPROM (and P-Flash) blocks are erased.
0x02	Erase Verify Block	Verify that the EEPROM block is erased.

Table 24-27. EEPROM Commands

FCMD	Command	Function on EEPROM Memory
0x08	Erase All Blocks	Erase all EEPROM (and P-Flash) blocks. An erase of all Flash blocks is only possible when the FPLDIS, FPHDIS, and FPOPEN bits in the FPROT register and the DPOPEN bit in the EEPROT register are set prior to launching the command.
0x09	Erase Flash Block	Erase a EEPROM (or P-Flash) block. An erase of the full EEPROM block is only possible when DPOPEN bit in the EEPROT register is set prior to launching the command.
0x0B	Unsecure Flash	Supports a method of releasing MCU security by erasing all EEPROM (and P-Flash) blocks and verifying that all EEPROM (and P-Flash) blocks are erased.
0x0D	Set User Margin Level	Specifies a user margin read level for the EEPROM block.
0x0E	Set Field Margin Level	Specifies a field margin read level for the EEPROM block (special modes only).
0x10	Erase Verify EEPROM Section	Verify that a given number of words starting at the address provided are erased.
0x11	Program EEPROM	Program up to four words in the EEPROM block.
0x12	Erase EEPROM Sector	Erase all bytes in a sector of the EEPROM block.

24.4.5 Allowed Simultaneous P-Flash and EEPROM Operations

Only the operations marked ‘OK’ in Table 24-28 are permitted to be run simultaneously on the Program Flash and EEPROM blocks. Some operations cannot be executed simultaneously because certain hardware resources are shared by the two memories. The priority has been placed on permitting Program Flash reads while program and erase operations execute on the EEPROM, providing read (P-Flash) while write (EEPROM) functionality.

Table 24-28. Allowed P-Flash and EEPROM Simultaneous Operations

	EEPROM				
Program Flash	**Read**	**Margin Read[1]**	**Program**	**Sector Erase**	**Mass Erase[2]**
Read		OK	OK	OK	
Margin Read[1]					
Program					
Sector Erase					
Mass Erase[2]					OK

1 A ‘Margin Read’ is any read after executing the margin setting commands ‘Set User Margin Level’ or ‘Set Field Margin Level’ with anything but the ‘normal’ level specified. See the Note on margin settings in Section 24.4.6.12 and Section 24.4.6.13.

2 The ‘Mass Erase’ operations are commands ‘Erase All Blocks’ and ‘Erase Flash Block’

24.4.6 Flash Command Description

This section provides details of all available Flash commands launched by a command write sequence. The ACCERR bit in the FSTAT register will be set during the command write sequence if any of the following illegal steps are performed, causing the command not to be processed by the Memory Controller:

- Starting any command write sequence that programs or erases Flash memory before initializing the FCLKDIV register
- Writing an invalid command as part of the command write sequence
- For additional possible errors, refer to the error handling table provided for each command

If a Flash block is read during execution of an algorithm (CCIF = 0) on that same block, the read operation will return invalid data if both flags SFDIF and DFDIF are set. If the SFDIF or DFDIF flags were not previously set when the invalid read operation occurred, both the SFDIF and DFDIF flags will be set.

If the ACCERR or FPVIOL bits are set in the FSTAT register, the user must clear these bits before starting any command write sequence (see Section 24.3.2.7).

CAUTION

A Flash word or phrase must be in the erased state before being programmed. Cumulative programming of bits within a Flash word or phrase is not allowed.

24.4.6.1 Erase Verify All Blocks Command

The Erase Verify All Blocks command will verify that all P-Flash and EEPROM blocks have been erased.

Table 24-29. Erase Verify All Blocks Command FCCOB Requirements

CCOBIX[2:0]	FCCOB Parameters	
000	0x01	Not required

Upon clearing CCIF to launch the Erase Verify All Blocks command, the Memory Controller will verify that the entire Flash memory space is erased. The CCIF flag will set after the Erase Verify All Blocks operation has completed. If all blocks are not erased, it means blank check failed, both MGSTAT bits will be set.

Table 24-30. Erase Verify All Blocks Command Error Handling

Register	Error Bit	Error Condition
FSTAT	ACCERR	Set if CCOBIX[2:0] != 000 at command launch
	FPVIOL	None
	MGSTAT1	Set if any errors have been encountered during the read[1] or if blank check failed .
	MGSTAT0	Set if any non-correctable errors have been encountered during the read or if blank check failed.

[1] As found in the memory map for FTMRG32K1.

24.4.6.2 Erase Verify Block Command

The Erase Verify Block command allows the user to verify that an entire P-Flash or EEPROM block has been erased. The FCCOB FlashBlockSelectionCode[1:0] bits determine which block must be verified.

Table 24-31. Erase Verify Block Command FCCOB Requirements

CCOBIX[2:0]	FCCOB Parameters	
000	0x02	Flash block selection code [1:0]. See Table 24-32

Table 24-32. Flash block selection code description

Selection code[1:0]	Flash block to be verified
00	EEPROM
01	Invalid (ACCERR)
10	Invalid (ACCERR)
11	P-Flash

Upon clearing CCIF to launch the Erase Verify Block command, the Memory Controller will verify that the selected P-Flash or EEPROM block is erased. The CCIF flag will set after the Erase Verify Block operation has completed.If the block is not erased, it means blank check failed, both MGSTAT bits will be set.

Table 24-33. Erase Verify Block Command Error Handling

Register	Error Bit	Error Condition
FSTAT	ACCERR	Set if CCOBIX[2:0] != 000 at command launch
		Set if an invalid FlashBlockSelectionCode[1:0] is supplied[1]
	FPVIOL	None
	MGSTAT1	Set if any errors have been encountered during the read[2] or if blank check failed.
	MGSTAT0	Set if any non-correctable errors have been encountered during the read[2] or if blank check failed.

1 As defined by the memory map for FTMRG32K1.

2 As found in the memory map for FTMRG32K1.

24.4.6.3 Erase Verify P-Flash Section Command

The Erase Verify P-Flash Section command will verify that a section of code in the P-Flash memory is erased. The Erase Verify P-Flash Section command defines the starting point of the code to be verified and the number of phrases.

Table 24-34. Erase Verify P-Flash Section Command FCCOB Requirements

CCOBIX[2:0]	FCCOB Parameters	
000	0x03	Global address [17:16] of a P-Flash block
001	Global address [15:0] of the first phrase to be verified	
010	Number of phrases to be verified	

Upon clearing CCIF to launch the Erase Verify P-Flash Section command, the Memory Controller will verify the selected section of Flash memory is erased. The CCIF flag will set after the Erase Verify P-Flash Section operation has completed. If the section is not erased, it means blank check failed, both MGSTAT bits will be set.

Table 24-35. Erase Verify P-Flash Section Command Error Handling

Register	Error Bit	Error Condition
FSTAT	ACCERR	Set if CCOBIX[2:0] != 010 at command launch
		Set if command not available in current mode (see Table 24-25)
		Set if an invalid global address [17:0] is supplied see Table 24-3)[1]
		Set if a misaligned phrase address is supplied (global address [2:0] != 000)
		Set if the requested section crosses a the P-Flash address boundary
	FPVIOL	None
	MGSTAT1	Set if any errors have been encountered during the read[2] or if blank check failed.
	MGSTAT0	Set if any non-correctable errors have been encountered during the read[2] or if blank check failed.

1 As defined by the memory map for FTMRG32K1.

2 As found in the memory map for FTMRG32K1.

24.4.6.4 Read Once Command

The Read Once command provides read access to a reserved 64 byte field (8 phrases) located in the nonvolatile information register of P-Flash. The Read Once field is programmed using the Program Once command described in Section 24.4.6.6. The Read Once command must not be executed from the Flash block containing the Program Once reserved field to avoid code runaway.

Table 24-36. Read Once Command FCCOB Requirements

CCOBIX[2:0]	FCCOB Parameters	
000	0x04	Not Required
001	Read Once phrase index (0x0000 - 0x0007)	
010	Read Once word 0 value	
011	Read Once word 1 value	
100	Read Once word 2 value	

Table 24-36. Read Once Command FCCOB Requirements

CCOBIX[2:0]	FCCOB Parameters
101	Read Once word 3 value

Upon clearing CCIF to launch the Read Once command, a Read Once phrase is fetched and stored in the FCCOB indexed register. The CCIF flag will set after the Read Once operation has completed. Valid phrase index values for the Read Once command range from 0x0000 to 0x0007. During execution of the Read Once command, any attempt to read addresses within P-Flash block will return invalid data.

Table 24-37. Read Once Command Error Handling

Register	Error Bit	Error Condition
FSTAT	ACCERR	Set if CCOBIX[2:0] != 001 at command launch
		Set if command not available in current mode (see Table 24-25)
		Set if an invalid phrase index is supplied
	FPVIOL	None
	MGSTAT1	Set if any errors have been encountered during the read
	MGSTAT0	Set if any non-correctable errors have been encountered during the read

24.4.6.5 Program P-Flash Command

The Program P-Flash operation will program a previously erased phrase in the P-Flash memory using an embedded algorithm.

CAUTION

A P-Flash phrase must be in the erased state before being programmed. Cumulative programming of bits within a Flash phrase is not allowed.

Table 24-38. Program P-Flash Command FCCOB Requirements

CCOBIX[2:0]	FCCOB Parameters	
000	0x06	Global address [17:16] to identify P-Flash block
001	Global address [15:0] of phrase location to be programmed[1]	
010	Word 0 program value	
011	Word 1 program value	
100	Word 2 program value	
101	Word 3 program value	

1 Global address [2:0] must be 000

Upon clearing CCIF to launch the Program P-Flash command, the Memory Controller will program the data words to the supplied global address and will then proceed to verify the data words read back as expected. The CCIF flag will set after the Program P-Flash operation has completed.

Table 24-39. Program P-Flash Command Error Handling

Register	Error Bit	Error Condition
FSTAT	ACCERR	Set if CCOBIX[2:0] != 101 at command launch
		Set if command not available in current mode (see Table 24-25)
		Set if an invalid global address [17:0] is supplied see Table 24-3)[1]
		Set if a misaligned phrase address is supplied (global address [2:0] != 000)
	FPVIOL	Set if the global address [17:0] points to a protected area
	MGSTAT1	Set if any errors have been encountered during the verify operation
	MGSTAT0	Set if any non-correctable errors have been encountered during the verify operation

1 As defined by the memory map for FTMRG32K1.

24.4.6.6 Program Once Command

The Program Once command restricts programming to a reserved 64 byte field (8 phrases) in the nonvolatile information register located in P-Flash. The Program Once reserved field can be read using the Read Once command as described in Section 24.4.6.4. The Program Once command must only be issued once since the nonvolatile information register in P-Flash cannot be erased. The Program Once command must not be executed from the Flash block containing the Program Once reserved field to avoid code runaway.

Table 24-40. Program Once Command FCCOB Requirements

CCOBIX[2:0]	FCCOB Parameters	
000	0x07	Not Required
001	Program Once phrase index (0x0000 - 0x0007)	
010	Program Once word 0 value	
011	Program Once word 1 value	
100	Program Once word 2 value	
101	Program Once word 3 value	

Upon clearing CCIF to launch the Program Once command, the Memory Controller first verifies that the selected phrase is erased. If erased, then the selected phrase will be programmed and then verified with read back. The CCIF flag will remain clear, setting only after the Program Once operation has completed.

The reserved nonvolatile information register accessed by the Program Once command cannot be erased and any attempt to program one of these phrases a second time will not be allowed. Valid phrase index values for the Program Once command range from 0x0000 to 0x0007. During execution of the Program Once command, any attempt to read addresses within P-Flash will return invalid data.

Table 24-41. Program Once Command Error Handling

Register	Error Bit	Error Condition
FSTAT	ACCERR	Set if CCOBIX[2:0] != 101 at command launch
		Set if command not available in current mode (see Table 24-25)
		Set if an invalid phrase index is supplied
		Set if the requested phrase has already been programmed[1]
	FPVIOL	None
	MGSTAT1	Set if any errors have been encountered during the verify operation
	MGSTAT0	Set if any non-correctable errors have been encountered during the verify operation

1 If a Program Once phrase is initially programmed to 0xFFFF_FFFF_FFFF_FFFF, the Program Once command will be allowed to execute again on that same phrase.

24.4.6.7 Erase All Blocks Command

The Erase All Blocks operation will erase the entire P-Flash and EEPROM memory space.

Table 24-42. Erase All Blocks Command FCCOB Requirements

CCOBIX[2:0]	FCCOB Parameters	
000	0x08	Not required

Upon clearing CCIF to launch the Erase All Blocks command, the Memory Controller will erase the entire Flash memory space and verify that it is erased. If the Memory Controller verifies that the entire Flash memory space was properly erased, security will be released. During the execution of this command (CCIF=0) the user must not write to any Flash module register. The CCIF flag will set after the Erase All Blocks operation has completed.

Table 24-43. Erase All Blocks Command Error Handling

Register	Error Bit	Error Condition
FSTAT	ACCERR	Set if CCOBIX[2:0] != 000 at command launch
		Set if command not available in current mode (see Table 24-25)
	FPVIOL	Set if any area of the P-Flash or EEPROM memory is protected
	MGSTAT1	Set if any errors have been encountered during the verify operation[1]
	MGSTAT0	Set if any non-correctable errors have been encountered during the verify operation[1]

1 As found in the memory map for FTMRG32K1.

24.4.6.8 Erase Flash Block Command

The Erase Flash Block operation will erase all addresses in a P-Flash or EEPROM block.

Table 24-44. Erase Flash Block Command FCCOB Requirements

CCOBIX[2:0]	FCCOB Parameters	
000	0x09	Global address [17:16] to identify Flash block
001	Global address [15:0] in Flash block to be erased	

Upon clearing CCIF to launch the Erase Flash Block command, the Memory Controller will erase the selected Flash block and verify that it is erased. The CCIF flag will set after the Erase Flash Block operation has completed.

Table 24-45. Erase Flash Block Command Error Handling

Register	Error Bit	Error Condition
FSTAT	ACCERR	Set if CCOBIX[2:0] != 001 at command launch
		Set if command not available in current mode (see Table 24-25)
		Set if an invalid global address [17:16] is supplied[1]
		Set if the supplied P-Flash address is not phrase-aligned or if the EEPROM address is not word-aligned
	FPVIOL	Set if an area of the selected Flash block is protected
	MGSTAT1	Set if any errors have been encountered during the verify operation[2]
	MGSTAT0	Set if any non-correctable errors have been encountered during the verify operation[2]

1 As defined by the memory map for FTMRG32K1.

2 As found in the memory map for FTMRG32K1.

24.4.6.9 Erase P-Flash Sector Command

The Erase P-Flash Sector operation will erase all addresses in a P-Flash sector.

Table 24-46. Erase P-Flash Sector Command FCCOB Requirements

CCOBIX[2:0]	FCCOB Parameters	
000	0x0A	Global address [17:16] to identify P-Flash block to be erased
001	Global address [15:0] anywhere within the sector to be erased. Refer to Section 24.1.2.1 for the P-Flash sector size.	

Upon clearing CCIF to launch the Erase P-Flash Sector command, the Memory Controller will erase the selected Flash sector and then verify that it is erased. The CCIF flag will be set after the Erase P-Flash Sector operation has completed.

Table 24-47. Erase P-Flash Sector Command Error Handling

Register	Error Bit	Error Condition
FSTAT	ACCERR	Set if CCOBIX[2:0] != 001 at command launch
		Set if command not available in current mode (see Table 24-25)
		Set if an invalid global address [17:16] is supplied see Table 24-3)[1]
		Set if a misaligned phrase address is supplied (global address [2:0] != 000)
	FPVIOL	Set if the selected P-Flash sector is protected
	MGSTAT1	Set if any errors have been encountered during the verify operation
	MGSTAT0	Set if any non-correctable errors have been encountered during the verify operation

1 As defined by the memory map for FTMRG32K1.

24.4.6.10 Unsecure Flash Command

The Unsecure Flash command will erase the entire P-Flash and EEPROM memory space and, if the erase is successful, will release security.

Table 24-48. Unsecure Flash Command FCCOB Requirements

CCOBIX[2:0]	FCCOB Parameters	
000	0x0B	Not required

Upon clearing CCIF to launch the Unsecure Flash command, the Memory Controller will erase the entire P-Flash and EEPROM memory space and verify that it is erased. If the Memory Controller verifies that the entire Flash memory space was properly erased, security will be released. If the erase verify is not successful, the Unsecure Flash operation sets MGSTAT1 and terminates without changing the security state. During the execution of this command (CCIF=0) the user must not write to any Flash module register. The CCIF flag is set after the Unsecure Flash operation has completed.

Table 24-49. Unsecure Flash Command Error Handling

Register	Error Bit	Error Condition
FSTAT	ACCERR	Set if CCOBIX[2:0] != 000 at command launch
		Set if command not available in current mode (see Table 24-25)
	FPVIOL	Set if any area of the P-Flash or EEPROM memory is protected
	MGSTAT1	Set if any errors have been encountered during the verify operation[1]
	MGSTAT0	Set if any non-correctable errors have been encountered during the verify operation[1]

1 As found in the memory map for FTMRG32K1.

24.4.6.11 Verify Backdoor Access Key Command

The Verify Backdoor Access Key command will only execute if it is enabled by the KEYEN bits in the FSEC register (see Table 24-10). The Verify Backdoor Access Key command releases security if user-supplied keys match those stored in the Flash security bytes of the Flash configuration field (see Table 24-4). The Verify Backdoor Access Key command must not be executed from the Flash block containing the backdoor comparison key to avoid code runaway.

Table 24-50. Verify Backdoor Access Key Command FCCOB Requirements

CCOBIX[2:0]	FCCOB Parameters	
000	0x0C	Not required
001	Key 0	
010	Key 1	
011	Key 2	
100	Key 3	

Upon clearing CCIF to launch the Verify Backdoor Access Key command, the Memory Controller will check the FSEC KEYEN bits to verify that this command is enabled. If not enabled, the Memory Controller sets the ACCERR bit in the FSTAT register and terminates. If the command is enabled, the Memory Controller compares the key provided in FCCOB to the backdoor comparison key in the Flash configuration field with Key 0 compared to 0x3_FF00, etc. If the backdoor keys match, security will be released. If the backdoor keys do not match, security is not released and all future attempts to execute the Verify Backdoor Access Key command are aborted (set ACCERR) until a reset occurs. The CCIF flag is set after the Verify Backdoor Access Key operation has completed.

Table 24-51. Verify Backdoor Access Key Command Error Handling

Register	Error Bit	Error Condition
FSTAT	ACCERR	Set if CCOBIX[2:0] != 100 at command launch
		Set if an incorrect backdoor key is supplied
		Set if backdoor key access has not been enabled (KEYEN[1:0] != 10, see Section 24.3.2.2)
		Set if the backdoor key has mismatched since the last reset
	FPVIOL	None
	MGSTAT1	None
	MGSTAT0	None

24.4.6.12 Set User Margin Level Command

The Set User Margin Level command causes the Memory Controller to set the margin level for future read operations of the P-Flash or EEPROM block.

Table 24-52. Set User Margin Level Command FCCOB Requirements

CCOBIX[2:0]	FCCOB Parameters	
000	0x0D	Flash block selection code [1:0]. See Table 24-32
001	Margin level setting.	

Upon clearing CCIF to launch the Set User Margin Level command, the Memory Controller will set the user margin level for the targeted block and then set the CCIF flag.

NOTE

When the EEPROM block is targeted, the EEPROM user margin levels are applied only to the EEPROM reads. However, when the P-Flash block is targeted, the P-Flash user margin levels are applied to both P-Flash and EEPROM reads. It is not possible to apply user margin levels to the P-Flash block only.

Valid margin level settings for the Set User Margin Level command are defined in Table 24-53.

Table 24-53. Valid Set User Margin Level Settings

CCOB (CCOBIX=001)	Level Description
0x0000	Return to Normal Level
0x0001	User Margin-1 Level[1]
0x0002	User Margin-0 Level[2]

1 Read margin to the erased state

2 Read margin to the programmed state

Table 24-54. Set User Margin Level Command Error Handling

Register	Error Bit	Error Condition
FSTAT	ACCERR	Set if CCOBIX[2:0] != 001 at command launch
		Set if command not available in current mode (see Table 24-25)
		Set if an invalid FlashBlockSelectionCode[1:0] is supplied (See Table 24-32)
		Set if an invalid margin level setting is supplied
	FPVIOL	None
	MGSTAT1	None
	MGSTAT0	None

NOTE

User margin levels can be used to check that Flash memory contents have adequate margin for normal level read operations. If unexpected results are encountered when checking Flash memory contents at user margin levels, a potential loss of information has been detected.

24.4.6.13 Set Field Margin Level Command

The Set Field Margin Level command, valid in special modes only, causes the Memory Controller to set the margin level specified for future read operations of the P-Flash or EEPROM block.

Upon clearing CCIF to launch the Set Field Margin Level command, the Memory Controller will set the

Table 24-55. Set Field Margin Level Command FCCOB Requirements

CCOBIX[2:0]	FCCOB Parameters	
000	0x0E	Flash block selection code [1:0]. See Table 24-32
001	Margin level setting.	

field margin level for the targeted block and then set the CCIF flag.

NOTE

When the EEPROM block is targeted, the EEPROM field margin levels are applied only to the EEPROM reads. However, when the P-Flash block is targeted, the P-Flash field margin levels are applied to both P-Flash and EEPROM reads. It is not possible to apply field margin levels to the P-Flash block only.

Valid margin level settings for the Set Field Margin Level command are defined in Table 24-56.

Table 24-56. Valid Set Field Margin Level Settings

CCOB (CCOBIX=001)	Level Description
0x0000	Return to Normal Level
0x0001	User Margin-1 Level[1]
0x0002	User Margin-0 Level[2]
0x0003	Field Margin-1 Level[1]
0x0004	Field Margin-0 Level[2]

[1] Read margin to the erased state

[2] Read margin to the programmed state

Table 24-57. Set Field Margin Level Command Error Handling

Register	Error Bit	Error Condition
FSTAT	ACCERR	Set if CCOBIX[2:0] != 001 at command launch
		Set if command not available in current mode (see Table 24-25)
		Set if an invalid FlashBlockSelectionCode[1:0] is supplied (See Table 24-32)[1]
		Set if an invalid margin level setting is supplied
	FPVIOL	None
	MGSTAT1	None
	MGSTAT0	None

1 As defined by the memory map for FTMRG32K1.

CAUTION

Field margin levels must only be used during verify of the initial factory programming.

NOTE

Field margin levels can be used to check that Flash memory contents have adequate margin for data retention at the normal level setting. If unexpected results are encountered when checking Flash memory contents at field margin levels, the Flash memory contents should be erased and reprogrammed.

24.4.6.14 Erase Verify EEPROM Section Command

The Erase Verify EEPROM Section command will verify that a section of code in the EEPROM is erased. The Erase Verify EEPROM Section command defines the starting point of the data to be verified and the number of words.

Table 24-58. Erase Verify EEPROM Section Command FCCOB Requirements

CCOBIX[2:0]	FCCOB Parameters	
000	0x10	Global address [17:16] to identify the EEPROM block
001	Global address [15:0] of the first word to be verified	
010	Number of words to be verified	

Upon clearing CCIF to launch the Erase Verify EEPROM Section command, the Memory Controller will verify the selected section of EEPROM memory is erased. The CCIF flag will set after the Erase Verify EEPROM Section operation has completed. If the section is not erased, it means blank check failed, both MGSTAT bits will be set.

Table 24-59. Erase Verify EEPROM Section Command Error Handling

Register	Error Bit	Error Condition
FSTAT	ACCERR	Set if CCOBIX[2:0] != 010 at command launch
		Set if command not available in current mode (see Table 24-25)
		Set if an invalid global address [17:0] is supplied
		Set if a misaligned word address is supplied (global address [0] != 0)
		Set if the requested section breaches the end of the EEPROM block
	FPVIOL	None
	MGSTAT1	Set if any errors have been encountered during the read or if blank check failed.
	MGSTAT0	Set if any non-correctable errors have been encountered during the read or if blank check failed.

24.4.6.15 Program EEPROM Command

The Program EEPROM operation programs one to four previously erased words in the EEPROM block. The Program EEPROM operation will confirm that the targeted location(s) were successfully programmed upon completion.

CAUTION

A Flash word must be in the erased state before being programmed. Cumulative programming of bits within a Flash word is not allowed.

Table 24-60. Program EEPROM Command FCCOB Requirements

CCOBIX[2:0]	FCCOB Parameters	
000	0x11	Global address [17:16] to identify the EEPROM block
001	Global address [15:0] of word to be programmed	
010	Word 0 program value	
011	Word 1 program value, if desired	
100	Word 2 program value, if desired	
101	Word 3 program value, if desired	

Upon clearing CCIF to launch the Program EEPROM command, the user-supplied words will be transferred to the Memory Controller and be programmed if the area is unprotected. The CCOBIX index value at Program EEPROM command launch determines how many words will be programmed in the EEPROM block. The CCIF flag is set when the operation has completed.

Table 24-61. Program EEPROM Command Error Handling

Register	Error Bit	Error Condition
FSTAT	ACCERR	Set if CCOBIX[2:0] < 010 at command launch
		Set if CCOBIX[2:0] > 101 at command launch
		Set if command not available in current mode (see Table 24-25)
		Set if an invalid global address [17:0] is supplied
		Set if a misaligned word address is supplied (global address [0] != 0)
		Set if the requested group of words breaches the end of the EEPROM block
	FPVIOL	Set if the selected area of the EEPROM memory is protected
	MGSTAT1	Set if any errors have been encountered during the verify operation
	MGSTAT0	Set if any non-correctable errors have been encountered during the verify operation

24.4.6.16 Erase EEPROM Sector Command

The Erase EEPROM Sector operation will erase all addresses in a sector of the EEPROM block.

Table 24-62. Erase EEPROM Sector Command FCCOB Requirements

CCOBIX[2:0]	FCCOB Parameters	
000	0x12	Global address [17:16] to identify EEPROM block
001	Global address [15:0] anywhere within the sector to be erased. See Section 24.1.2.2 for EEPROM sector size.	

Upon clearing CCIF to launch the Erase EEPROM Sector command, the Memory Controller will erase the selected Flash sector and verify that it is erased. The CCIF flag will set after the Erase EEPROM Sector operation has completed.

Table 24-63. Erase EEPROM Sector Command Error Handling

Register	Error Bit	Error Condition
FSTAT	ACCERR	Set if CCOBIX[2:0] != 001 at command launch
		Set if command not available in current mode (see Table 24-25)
		Set if an invalid global address [17:0] is suppliedsee Table 24-3)
		Set if a misaligned word address is supplied (global address [0] != 0)
	FPVIOL	Set if the selected area of the EEPROM memory is protected
	MGSTAT1	Set if any errors have been encountered during the verify operation
	MGSTAT0	Set if any non-correctable errors have been encountered during the verify operation

24.4.7 Interrupts

The Flash module can generate an interrupt when a Flash command operation has completed or when a Flash command operation has detected an ECC fault.

Table 24-64. Flash Interrupt Sources

Interrupt Source	Interrupt Flag	Local Enable	Global (CCR) Mask
Flash Command Complete	CCIF (FSTAT register)	CCIE (FCNFG register)	I Bit
ECC Double Bit Fault on Flash Read	DFDIF (FERSTAT register)	DFDIE (FERCNFG register)	I Bit
ECC Single Bit Fault on Flash Read	SFDIF (FERSTAT register)	SFDIE (FERCNFG register)	I Bit

NOTE

Vector addresses and their relative interrupt priority are determined at the MCU level.

24.4.7.1 Description of Flash Interrupt Operation

The Flash module uses the CCIF flag in combination with the CCIE interrupt enable bit to generate the Flash command interrupt request. The Flash module uses the DFDIF and SFDIF flags in combination with the DFDIE and SFDIE interrupt enable bits to generate the Flash error interrupt request. For a detailed description of the register bits involved, refer to Section 24.3.2.5, “Flash Configuration Register (FCNFG)”, Section 24.3.2.6, “Flash Error Configuration Register (FERCNFG)”, Section 24.3.2.7, “Flash Status Register (FSTAT)”, and Section 24.3.2.8, “Flash Error Status Register (FERSTAT)”.

The logic used for generating the Flash module interrupts is shown in Figure 24-26.

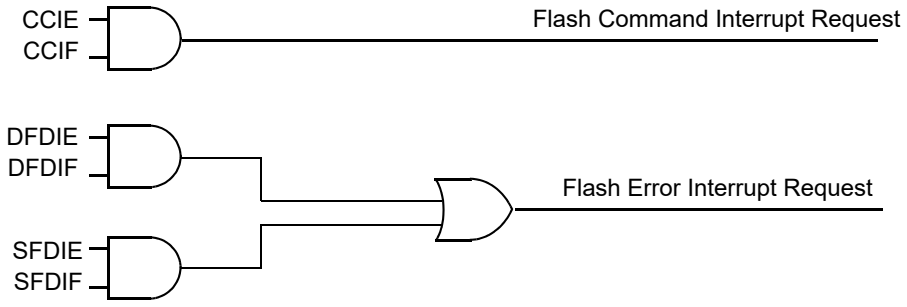

Figure 24-26. Flash Module Interrupts Implementation

24.4.8 Wait Mode

The Flash module is not affected if the MCU enters wait mode. The Flash module can recover the MCU from wait via the CCIF interrupt (see Section 24.4.7, “Interrupts”).

24.4.9 Stop Mode

If a Flash command is active (CCIF = 0) when the MCU requests stop mode, the current Flash operation will be completed before the MCU is allowed to enter stop mode.

24.5 Security

The Flash module provides security information to the MCU. The Flash security state is defined by the SEC bits of the FSEC register (see Table 24-11). During reset, the Flash module initializes the FSEC register using data read from the security byte of the Flash configuration field at global address 0x3_FF0F. The security state out of reset can be permanently changed by programming the security byte assuming that the MCU is starting from a mode where the necessary P-Flash erase and program commands are available and that the upper region of the P-Flash is unprotected. If the Flash security byte is successfully programmed, its new value will take affect after the next MCU reset.

The following subsections describe these security-related subjects:

- Unsecuring the MCU using Backdoor Key Access
- Unsecuring the MCU in Special Single Chip Mode using BDM
- Mode and Security Effects on Flash Command Availability

24.5.1 Unsecuring the MCU using Backdoor Key Access

The MCU may be unsecured by using the backdoor key access feature which requires knowledge of the contents of the backdoor keys (four 16-bit words programmed at addresses 0x3_FF00-0x3_FF07). If the KEYEN[1:0] bits are in the enabled state (see Section 24.3.2.2), the Verify Backdoor Access Key command (see Section 24.4.6.11) allows the user to present four prospective keys for comparison to the keys stored in the Flash memory via the Memory Controller. If the keys presented in the Verify Backdoor Access Key command match the backdoor keys stored in the Flash memory, the SEC bits in the FSEC register (see Table 24-11) will be changed to unsecure the MCU. Key values of 0x0000 and 0xFFFF are not permitted as backdoor keys. While the Verify Backdoor Access Key command is active, P-Flash memory and EEPROM memory will not be available for read access and will return invalid data.

The user code stored in the P-Flash memory must have a method of receiving the backdoor keys from an external stimulus. This external stimulus would typically be through one of the on-chip serial ports.

If the KEYEN[1:0] bits are in the enabled state (see Section 24.3.2.2), the MCU can be unsecured by the backdoor key access sequence described below:

1. Follow the command sequence for the Verify Backdoor Access Key command as explained in Section 24.4.6.11
2. If the Verify Backdoor Access Key command is successful, the MCU is unsecured and the SEC[1:0] bits in the FSEC register are forced to the unsecure state of 10

The Verify Backdoor Access Key command is monitored by the Memory Controller and an illegal key will prohibit future use of the Verify Backdoor Access Key command. A reset of the MCU is the only method to re-enable the Verify Backdoor Access Key command. The security as defined in the Flash security byte (0x3_FF0F) is not changed by using the Verify Backdoor Access Key command sequence. The backdoor keys stored in addresses 0x3_FF00-0x3_FF07 are unaffected by the Verify Backdoor Access Key command sequence. The Verify Backdoor Access Key command sequence has no effect on the program and erase protections defined in the Flash protection register, FPROT.

After the backdoor keys have been correctly matched, the MCU will be unsecured. After the MCU is unsecured, the sector containing the Flash security byte can be erased and the Flash security byte can be reprogrammed to the unsecure state, if desired. In the unsecure state, the user has full control of the contents of the backdoor keys by programming addresses 0x3_FF00-0x3_FF07 in the Flash configuration field.

24.5.2 Unsecuring the MCU in Special Single Chip Mode using BDM

A secured MCU can be unsecured in special single chip mode by using the following method to erase the P-Flash and EEPROM memory:

1. Reset the MCU into special single chip mode
2. Delay while the BDM executes the Erase Verify All Blocks command write sequence to check if the P-Flash and EEPROM memories are erased
3. Send BDM commands to disable protection in the P-Flash and EEPROM memory
4. Execute the Erase All Blocks command write sequence to erase the P-Flash and EEPROM memory. Alternatively the Unsecure Flash command can be executed, if so the steps 5 and 6 below are skeeped.
5. After the CCIF flag sets to indicate that the Erase All Blocks operation has completed, reset the MCU into special single chip mode
6. Delay while the BDM executes the Erase Verify All Blocks command write sequence to verify that the P-Flash and EEPROM memory are erased

If the P-Flash and EEPROM memory are verified as erased, the MCU will be unsecured. All BDM commands will now be enabled and the Flash security byte may be programmed to the unsecure state by continuing with the following steps:

7. Send BDM commands to execute the Program P-Flash command write sequence to program the Flash security byte to the unsecured state

8. Reset the MCU

24.5.3 Mode and Security Effects on Flash Command Availability

The availability of Flash module commands depends on the MCU operating mode and security state as shown in Table 24-25.

24.6 Initialization

On each system reset the flash module executes an initialization sequence which establishes initial values for the Flash Block Configuration Parameters, the FPROT and EEPROT protection registers, and the FOPT and FSEC registers. The initialization routine reverts to built-in default values that leave the module in a fully protected and secured state if errors are encountered during execution of the reset sequence. If a double bit fault is detected during the reset sequence, both MGSTAT bits in the FSTAT register will be set.

CCIF is cleared throughout the initialization sequence. The Flash module holds off all CPU access for a portion of the initialization sequence. Flash reads are allowed once the hold is removed. Completion of the initialization sequence is marked by setting CCIF high which enables user commands.

If a reset occurs while any Flash command is in progress, that command will be immediately aborted. The state of the word being programmed or the sector/block being erased is not guaranteed.

Chapter 25
32 KByte Flash Module (S12FTMRG32K1V1)

Table 25-1. Revision History

Revision Number	Revision Date	Sections Affected	Description of Changes
V01.04	17 Jun 2010	25.4.6.1/25-846 25.4.6.2/25-847 25.4.6.3/25-847 25.4.6.14/25-857	Clarify Erase Verify Commands Descriptions related to the bits MGSTAT[1:0] of the register FSTAT.
V01.05	20 Aug 2010	25.4.6.2/25-847 25.4.6.12/25-854 25.4.6.13/25-856	Updated description of the commands RD1BLK, MLOADU and MLOADF
V01.06	31 Jan 2011	25.3.2.9/25-829	Updated description of protection on Section 25.3.2.9

25.1 Introduction

The FTMRG32K1 module implements the following:

- 32Kbytes of P-Flash (Program Flash) memory
- 1 Kbytes of EEPROM memory

The Flash memory is ideal for single-supply applications allowing for field reprogramming without requiring external high voltage sources for program or erase operations. The Flash module includes a memory controller that executes commands to modify Flash memory contents. The user interface to the memory controller consists of the indexed Flash Common Command Object (FCCOB) register which is written to with the command, global address, data, and any required command parameters. The memory controller must complete the execution of a command before the FCCOB register can be written to with a new command.

CAUTION

A Flash word or phrase must be in the erased state before being programmed. Cumulative programming of bits within a Flash word or phrase is not allowed.

The Flash memory may be read as bytes and aligned words. Read access time is one bus cycle for bytes and aligned words. For misaligned words access, the CPU has to perform twice the byte read access command. For Flash memory, an erased bit reads 1 and a programmed bit reads 0.

It is possible to read from P-Flash memory while some commands are executing on EEPROM memory. It is not possible to read from EEPROM memory while a command is executing on P-Flash memory. Simultaneous P-Flash and EEPROM operations are discussed in Section 25.4.5.

Both P-Flash and EEPROM memories are implemented with Error Correction Codes (ECC) that can resolve single bit faults and detect double bit faults. For P-Flash memory, the ECC implementation requires that programming be done on an aligned 8 byte basis (a Flash phrase). Since P-Flash memory is always read by half-phrase, only one single bit fault in an aligned 4 byte half-phrase containing the byte or word accessed will be corrected.

25.1.1 Glossary

Command Write Sequence — An MCU instruction sequence to execute built-in algorithms (including program and erase) on the Flash memory.

EEPROM Memory — The EEPROM memory constitutes the nonvolatile memory store for data.

EEPROM Sector — The EEPROM sector is the smallest portion of the EEPROM memory that can be erased. The EEPROM sector consists of 4 bytes.

NVM Command Mode — An NVM mode using the CPU to setup the FCCOB register to pass parameters required for Flash command execution.

Phrase — An aligned group of four 16-bit words within the P-Flash memory. Each phrase includes two sets of aligned double words with each set including 7 ECC bits for single bit fault correction and double bit fault detection within each double word.

P-Flash Memory — The P-Flash memory constitutes the main nonvolatile memory store for applications.

P-Flash Sector — The P-Flash sector is the smallest portion of the P-Flash memory that can be erased. Each P-Flash sector contains 512 bytes.

Program IFR — Nonvolatile information register located in the P-Flash block that contains the Version ID, and the Program Once field.

25.1.2 Features

25.1.2.1 P-Flash Features

- 32 Kbytes of P-Flash memory composed of one 32 Kbyte Flash block divided into 64 sectors of 512 bytes
- Single bit fault correction and double bit fault detection within a 32-bit double word during read operations
- Automated program and erase algorithm with verify and generation of ECC parity bits

- Fast sector erase and phrase program operation
- Ability to read the P-Flash memory while programming a word in the EEPROM memory
- Flexible protection scheme to prevent accidental program or erase of P-Flash memory

25.1.2.2 EEPROM Features

- 1 Kbyte of EEPROM memory composed of one 1 Kbyte Flash block divided into 256 sectors of 4 bytes
- Single bit fault correction and double bit fault detection within a word during read operations
- Automated program and erase algorithm with verify and generation of ECC parity bits
- Fast sector erase and word program operation
- Protection scheme to prevent accidental program or erase of EEPROM memory
- Ability to program up to four words in a burst sequence

25.1.2.3 Other Flash Module Features

- No external high-voltage power supply required for Flash memory program and erase operations
- Interrupt generation on Flash command completion and Flash error detection
- Security mechanism to prevent unauthorized access to the Flash memory

25.1.3 Block Diagram

The block diagram of the Flash module is shown in Figure 25-1.

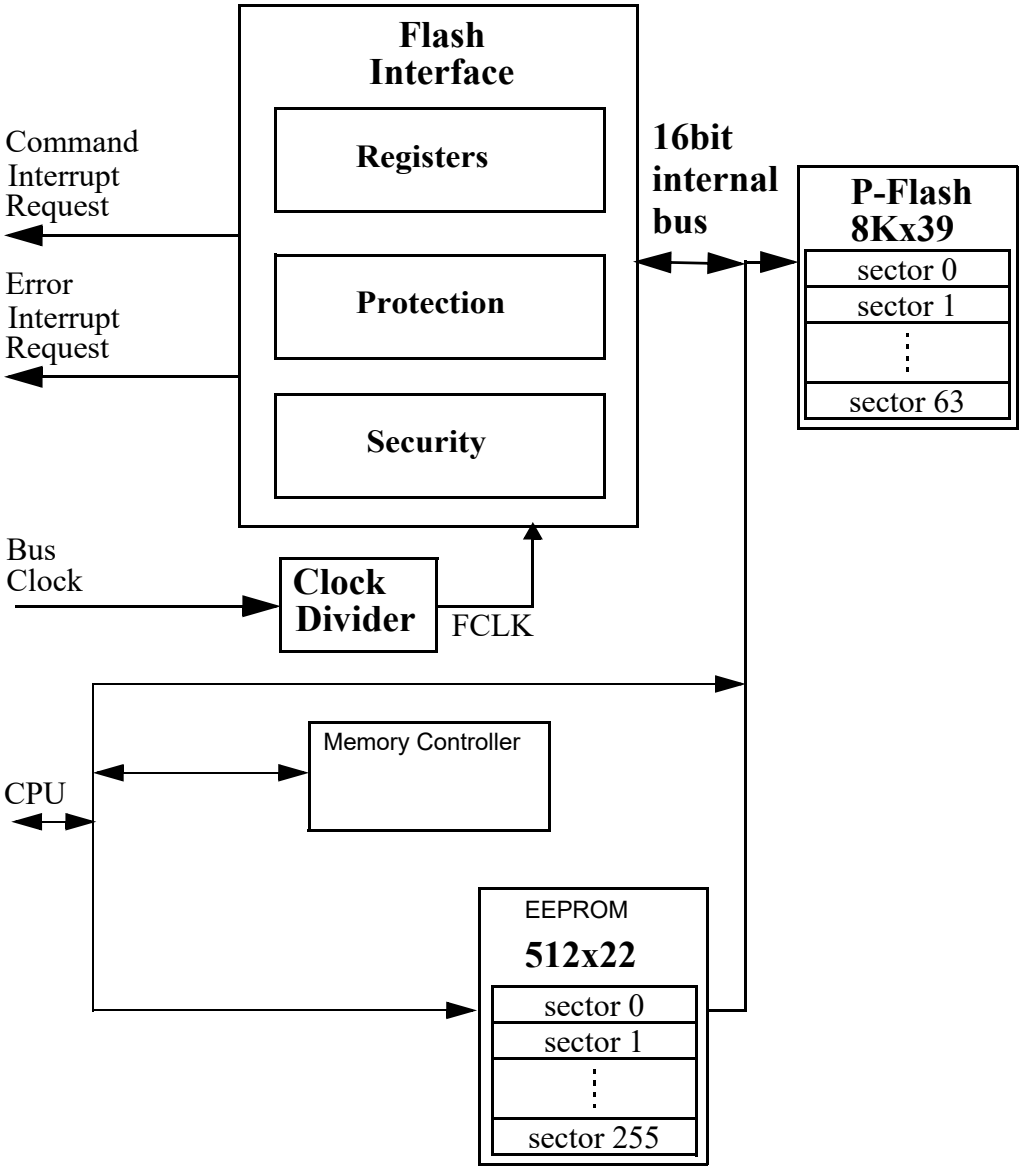

Figure 25-1. FTMRG32K1 Block Diagram

25.2 External Signal Description

The Flash module contains no signals that connect off-chip.

25.3 Memory Map and Registers

This section describes the memory map and registers for the Flash module. Read data from unimplemented memory space in the Flash module is undefined. Write access to unimplemented or reserved memory space in the Flash module will be ignored by the Flash module.

CAUTION

Writing to the Flash registers while a Flash command is executing (that is indicated when the value of flag CCIF reads as ’0’) is not allowed. If such action is attempted the write operation will not change the register value.

Writing to the Flash registers is allowed when the Flash is not busy executing commands (CCIF = 1) and during initialization right after reset, despite the value of flag CCIF in that case (refer to Section 25.6 for a complete description of the reset sequence).

.

Table 25-2. FTMRG Memory Map

Global Address (in Bytes)	Size (Bytes)	Description
0x0_0000 - 0x0_03FF	1,024	Register Space
0x0_0400 – 0x0_07FF	1,024	EEPROM Memory
0x0_4000 – 0x0_7FFF	16,284	NVMRES[1]=1 : NVM Resource area (see Figure 25-3)
0x3_8000 – 0x3_FFFF	32,768	P-Flash Memory

[1] See NVMRES description in Section 25.4.3

25.3.1 Module Memory Map

The S12 architecture places the P-Flash memory between global addresses 0x3_8000 and 0x3_FFFF as shown in Table 25-3.The P-Flash memory map is shown in Figure 25-2.

Table 25-3. P-Flash Memory Addressing

Global Address	Size (Bytes)	Description
0x3_8000 – 0x3_FFFF	32 K	P-Flash Block Contains Flash Configuration Field (see Table 25-4)

The FPROT register, described in Section 25.3.2.9, can be set to protect regions in the Flash memory from accidental program or erase. Three separate memory regions, one growing upward from global address 0x3_8000 in the Flash memory (called the lower region), one growing downward from global address 0x3_FFFF in the Flash memory (called the higher region), and the remaining addresses in the Flash memory, can be activated for protection. The Flash memory addresses covered by these protectable regions are shown in the P-Flash memory map. The higher address region is mainly targeted to hold the boot loader code since it covers the vector space. Default protection settings as well as security information that allows the MCU to restrict access to the Flash module are stored in the Flash configuration field as described in Table 25-4.

Table 25-4. Flash Configuration Field

Global Address	Size (Bytes)	Description
0x3_FF00-0x3_FF07	8	Backdoor Comparison Key Refer to Section 25.4.6.11, “Verify Backdoor Access Key Command,” and Section 25.5.1, “Unsecuring the MCU using Backdoor Key Access”
0x3_FF08-0x3_FF0B[1]	4	Reserved
0x3_FF0C[1]	1	P-Flash Protection byte. Refer to Section 25.3.2.9, “P-Flash Protection Register (FPROT)”
0x3_FF0D[1]	1	EEPROM Protection byte. Refer to Section 25.3.2.10, “EEPROM Protection Register (EEPROT)”
0x3_FF0E[1]	1	Flash Nonvolatile byte Refer to Section 25.3.2.16, “Flash Option Register (FOPT)”
0x3_FF0F[1]	1	Flash Security byte Refer to Section 25.3.2.2, “Flash Security Register (FSEC)”

1 0x3FF08-0x3_FF0F form a Flash phrase and must be programmed in a single command write sequence. Each byte in the 0x3_FF08 - 0x3_FF0B reserved field should be programmed to 0xFF.

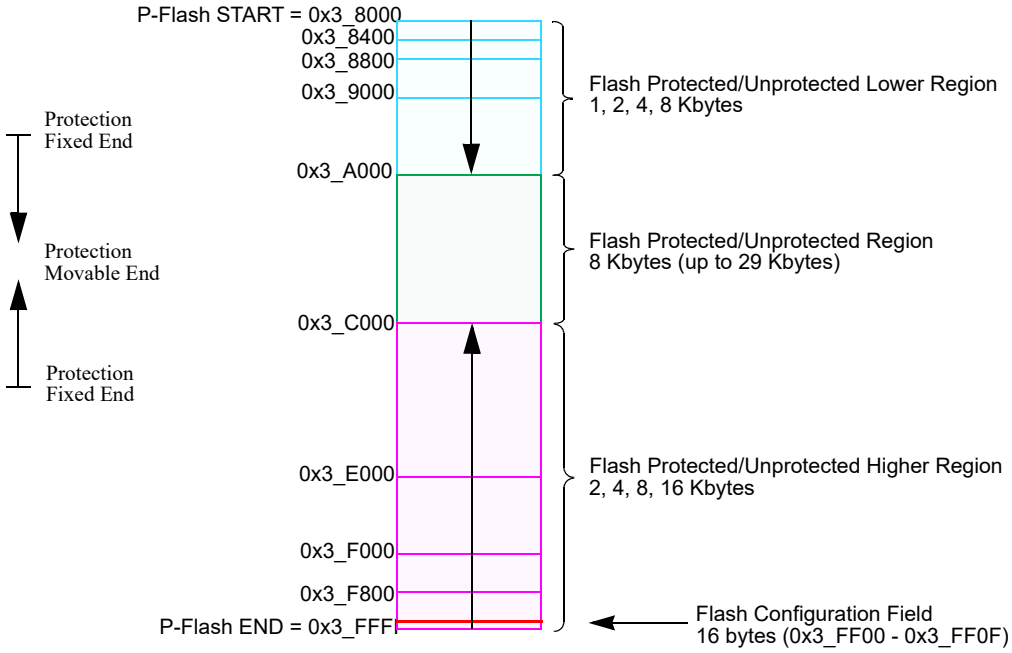

Figure 25-2. P-Flash Memory Map

Table 25-5. Program IFR Fields

Global Address	Size (Bytes)	Field Description
0x0_4000 – 0x0_4007	8	Reserved
0x0_4008 – 0x0_40B5	174	Reserved
0x0_40B6 – 0x0_40B7	2	Version ID[1]
0x0_40B8 – 0x0_40BF	8	Reserved
0x0_40C0 – 0x0_40FF	64	Program Once Field Refer to Section 25.4.6.6, “Program Once Command”

[1] Used to track firmware patch versions, see Section 25.4.2

Table 25-6. Memory Controller Resource Fields (NVMRES[1]=1)

Global Address	Size (Bytes)	Description
0x0_4000 – 0x040FF	256	P-Flash IFR (see Table 25-5)
0x0_4100 – 0x0_41FF	256	Reserved.
0x0_4200 – 0x0_57FF		Reserved
0x0_5800 – 0x0_59FF	512	Reserved
0x0_5A00 – 0x0_5FFF	1,536	Reserved
0x0_6000 – 0x0_6BFF	3,072	Reserved
0x0_6C00 – 0x0_7FFF	5,120	Reserved

1 NVMRES - See Section 25.4.3 for NVMRES (NVM Resource) detail.

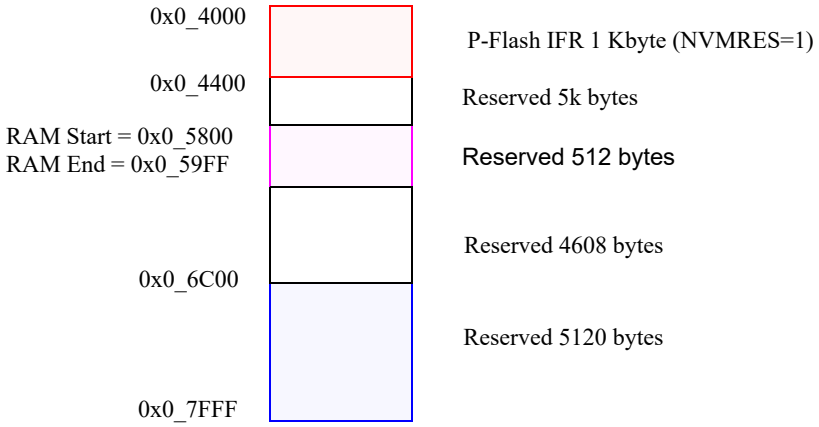

Figure 25-3. Memory Controller Resource Memory Map (NVMRES=1)

25.3.2 Register Descriptions

The Flash module contains a set of 20 control and status registers located between Flash module base + 0x0000 and 0x0013.

In the case of the writable registers, the write accesses are forbidden during Fash command execution (for more detail, see Caution note in Section 25.3).

A summary of the Flash module registers is given in Figure 25-4 with detailed descriptions in the following subsections.

Address & Name		7	6	5	4	3	2	1	0
0x0000 FCLKDIV	R	FDIVLD	FDIVLCK	FDIV5	FDIV4	FDIV3	FDIV2	FDIV1	FDIV0
	W								
0x0001 FSEC	R	KEYEN1	KEYEN0	RNV5	RNV4	RNV3	RNV2	SEC1	SEC0
	W								
0x0002 FCCOBIX	R	0	0	0	0	0	CCOBIX2	CCOBIX1	CCOBIX0
	W								
0x0003 FRSV0	R	0	0	0	0	0	0	0	0
	W								
0x0004 FCNFG	R	CCIE	0	0	IGNSF	0	0	FDFD	FSFD
	W								
0x0005 FERCNFG	R	0	0	0	0	0	0	DFDIE	SFDIE
	W								
0x0006 FSTAT	R	CCIF	0	ACCERR	FPVIOL	MGBUSY	RSVD	MGSTAT1	MGSTAT0
	W								
0x0007 FERSTAT	R	0	0	0	0	0	0	DFDIF	SFDIF
	W								
0x0008 FPROT	R	FPOPEN	RNV6	FPHDIS	FPHS1	FPHS0	FPLDIS	FPLS1	FPLS0
	W								
0x0009 EEPROT	R	DPOPEN	0	0	DPS4	DPS3	DPS2	DPS1	DPS0
	W								
0x000A FCCOBHI	R	CCOB15	CCOB14	CCOB13	CCOB12	CCOB11	CCOB10	CCOB9	CCOB8
	W								
0x000B FCCOBLO	R	CCOB7	CCOB6	CCOB5	CCOB4	CCOB3	CCOB2	CCOB1	CCOB0
	W								
0x000C FRSV1	R	0	0	0	0	0	0	0	0
	W								

Figure 25-4. FTMRG32K1 Register Summary

Address & Name		7	6	5	4	3	2	1	0
0x000D FRSV2	R	0	0	0	0	0	0	0	0
	W								
0x000E FRSV3	R	0	0	0	0	0	0	0	0
	W								
0x000F FRSV4	R	0	0	0	0	0	0	0	0
	W								
0x0010 FOPT	R	NV7	NV6	NV5	NV4	NV3	NV2	NV1	NV0
	W								
0x0011 FRSV5	R	0	0	0	0	0	0	0	0
	W								
0x0012 FRSV6	R	0	0	0	0	0	0	0	0
	W								
0x0013 FRSV7	R	0	0	0	0	0	0	0	0
	W								

= Unimplemented or Reserved

Figure 25-4. FTMRG32K1 Register Summary (continued)

25.3.2.1 Flash Clock Divider Register (FCLKDIV)

The FCLKDIV register is used to control timed events in program and erase algorithms.

Offset Module Base + 0x0000

	7	6	5	4	3	2	1	0
R	FDIVLD	FDIVLCK	FDIV[5:0]					
W								
Reset	0	0	0	0	0	0	0	0

= Unimplemented or Reserved

Figure 25-5. Flash Clock Divider Register (FCLKDIV)

All bits in the FCLKDIV register are readable, bit 7 is not writable, bit 6 is write-once-hi and controls the writability of the FDIV field in normal mode. In special mode, bits 6-0 are writable any number of times but bit 7 remains unwritable.

CAUTION

The FCLKDIV register should never be written while a Flash command is executing (CCIF=0).

Table 25-7. FCLKDIV Field Descriptions

Field	Description
7 FDIVLD	Clock Divider Loaded 0 FCLKDIV register has not been written since the last reset 1 FCLKDIV register has been written since the last reset
6 FDIVLCK	Clock Divider Locked 0 FDIV field is open for writing 1 FDIV value is locked and cannot be changed. Once the lock bit is set high, only reset can clear this bit and restore writability to the FDIV field in normal mode.
5–0 FDIV[5:0]	**Clock Divider Bits** — FDIV[5:0] must be set to effectively divide BUSCLK down to 1 MHz to control timed events during Flash program and erase algorithms. Table 25-8 shows recommended values for FDIV[5:0] based on the BUSCLK frequency. Please refer to Section 25.4.4, “Flash Command Operations,” for more information.

Table 25-8. FDIV values for various BUSCLK Frequencies

BUSCLK Frequency (MHz)		FDIV[5:0]	BUSCLK Frequency (MHz)		FDIV[5:0]
MIN[1]	MAX[2]		MIN[1]	MAX[2]	
1.0	1.6	0x00	16.6	17.6	0x10
1.6	2.6	0x01	17.6	18.6	0x11
2.6	3.6	0x02	18.6	19.6	0x12
3.6	4.6	0x03	19.6	20.6	0x13
4.6	5.6	0x04	20.6	21.6	0x14
5.6	6.6	0x05	21.6	22.6	0x15
6.6	7.6	0x06	22.6	23.6	0x16
7.6	8.6	0x07	23.6	24.6	0x17
8.6	9.6	0x08	24.6	25.6	0x18
9.6	10.6	0x09			
10.6	11.6	0x0A			
11.6	12.6	0x0B			
12.6	13.6	0x0C			
13.6	14.6	0x0D			
14.6	15.6	0x0E			
15.6	16.6	0x0F			

1 BUSCLK is Greater Than this value.

2 BUSCLK is Less Than or Equal to this value.

25.3.2.2 Flash Security Register (FSEC)

The FSEC register holds all bits associated with the security of the MCU and Flash module.

Offset Module Base + 0x0001

	7	6	5	4	3	2	1	0
R	KEYEN[1:0]		RNV[5:2]				SEC[1:0]	
W								
Reset	F[1]	F[1]	F[1]	F[1]	F[1]	F[1]	F[1]	F[1]

= Unimplemented or Reserved

Figure 25-6. Flash Security Register (FSEC)

1 Loaded from IFR Flash configuration field, during reset sequence.

All bits in the FSEC register are readable but not writable.

During the reset sequence, the FSEC register is loaded with the contents of the Flash security byte in the Flash configuration field at global address 0x3_FF0F located in P-Flash memory (see Table 25-4) as indicated by reset condition F in Figure 25-6. If a double bit fault is detected while reading the P-Flash phrase containing the Flash security byte during the reset sequence, all bits in the FSEC register will be set to leave the Flash module in a secured state with backdoor key access disabled.

Table 25-9. FSEC Field Descriptions

Field	Description
7–6 KEYEN[1:0]	**Backdoor Key Security Enable Bits** — The KEYEN[1:0] bits define the enabling of backdoor key access to the Flash module as shown in Table 25-10.
5–2 RNV[5:2]	**Reserved Nonvolatile Bits** — The RNV bits should remain in the erased state for future enhancements.
1–0 SEC[1:0]	**Flash Security Bits** — The SEC[1:0] bits define the security state of the MCU as shown in Table 25-11. If the Flash module is unsecured using backdoor key access, the SEC bits are forced to 10.

Table 25-10. Flash KEYEN States

KEYEN[1:0]	Status of Backdoor Key Access
00	DISABLED
01	DISABLED[1]
10	ENABLED
11	DISABLED

1 Preferred KEYEN state to disable backdoor key access.

Table 25-11. Flash Security States

SEC[1:0]	Status of Security
00	SECURED
01	SECURED[1]
10	UNSECURED
11	SECURED

1 Preferred SEC state to set MCU to secured state.

The security function in the Flash module is described in Section 25.5.

25.3.2.3 Flash CCOB Index Register (FCCOBIX)

The FCCOBIX register is used to index the FCCOB register for Flash memory operations.

Offset Module Base + 0x0002

	7	6	5	4	3	2	1	0
R	0	0	0	0	0	CCOBIX[2:0]		
W								
Reset	0	0	0	0	0	0	0	0

= Unimplemented or Reserved

Figure 25-7. FCCOB Index Register (FCCOBIX)

CCOBIX bits are readable and writable while remaining bits read 0 and are not writable.

Table 25-12. FCCOBIX Field Descriptions

Field	Description
2–0 CCOBIX[1:0]	**Common Command Register Index**— The CCOBIX bits are used to select which word of the FCCOB register array is being read or written to. See 25.3.2.11 Flash Common Command Object Register (FCCOB),” for more details.

25.3.2.4 Flash Reserved0 Register (FRSV0)

This Flash register is reserved for factory testing.

Offset Module Base + 0x000C

	7	6	5	4	3	2	1	0
R	0	0	0	0	0	0	0	0
W								
Reset	0	0	0	0	0	0	0	0

= Unimplemented or Reserved

Figure 25-8. Flash Reserved0 Register (FRSV0)

All bits in the FRSV0 register read 0 and are not writable.

25.3.2.5 Flash Configuration Register (FCNFG)

The FCNFG register enables the Flash command complete interrupt and forces ECC faults on Flash array read access from the CPU.

Offset Module Base + 0x0004

	7	6	5	4	3	2	1	0
R	CCIE	0	0	IGNSF	0	0	FDFD	FSFD
W								
Reset	0	0	0	0	0	0	0	0

= Unimplemented or Reserved

Figure 25-9. Flash Configuration Register (FCNFG)

CCIE, IGNSF, FDFD, and FSFD bits are readable and writable while remaining bits read 0 and are not writable.

Table 25-13. FCNFG Field Descriptions

Field	Description
7 CCIE	**Command Complete Interrupt Enable** — The CCIE bit controls interrupt generation when a Flash command has completed. 0 Command complete interrupt disabled 1 An interrupt will be requested whenever the CCIF flag in the FSTAT register is set (see Section 25.3.2.7)
4 IGNSF	**Ignore Single Bit Fault** — The IGNSF controls single bit fault reporting in the FERSTAT register (see Section 25.3.2.8). 0 All single bit faults detected during array reads are reported 1 Single bit faults detected during array reads are not reported and the single bit fault interrupt will not be generated
1 FDFD	**Force Double Bit Fault Detect** — The FDFD bit allows the user to simulate a double bit fault during Flash array read operations and check the associated interrupt routine. The FDFD bit is cleared by writing a 0 to FDFD. 0 Flash array read operations will set the DFDIF flag in the FERSTAT register only if a double bit fault is detected 1 Any Flash array read operation will force the DFDIF flag in the FERSTAT register to be set (see Section 25.3.2.7) and an interrupt will be generated as long as the DFDIE interrupt enable in the FERCNFG register is set (see Section 25.3.2.6)
0 FSFD	**Force Single Bit Fault Detect** — The FSFD bit allows the user to simulate a single bit fault during Flash array read operations and check the associated interrupt routine. The FSFD bit is cleared by writing a 0 to FSFD. 0 Flash array read operations will set the SFDIF flag in the FERSTAT register only if a single bit fault is detected 1 Flash array read operation will force the SFDIF flag in the FERSTAT register to be set (see Section 25.3.2.7) and an interrupt will be generated as long as the SFDIE interrupt enable in the FERCNFG register is set (see Section 25.3.2.6)

25.3.2.6 Flash Error Configuration Register (FERCNFG)

The FERCNFG register enables the Flash error interrupts for the FERSTAT flags.

Offset Module Base + 0x0005

	7	6	5	4	3	2	1	0
R	0	0	0	0	0	0	DFDIE	SFDIE
W								
Reset	0	0	0	0	0	0	0	0

= Unimplemented or Reserved

Figure 25-10. Flash Error Configuration Register (FERCNFG)

All assigned bits in the FERCNFG register are readable and writable.

Table 25-14. FERCNFG Field Descriptions

Field	Description
1 DFDIE	**Double Bit Fault Detect Interrupt Enable** — The DFDIE bit controls interrupt generation when a double bit fault is detected during a Flash block read operation. 0 DFDIF interrupt disabled 1 An interrupt will be requested whenever the DFDIF flag is set (see Section 25.3.2.8)
0 SFDIE	**Single Bit Fault Detect Interrupt Enable** — The SFDIE bit controls interrupt generation when a single bit fault is detected during a Flash block read operation. 0 SFDIF interrupt disabled whenever the SFDIF flag is set (see Section 25.3.2.8) 1 An interrupt will be requested whenever the SFDIF flag is set (see Section 25.3.2.8)

25.3.2.7 Flash Status Register (FSTAT)

The FSTAT register reports the operational status of the Flash module.

Offset Module Base + 0x0006

	7	6	5	4	3	2	1	0
R	CCIF	0	ACCERR	FPVIOL	MGBUSY	RSVD	MGSTAT[1:0]	
W								
Reset	1	0	0	0	0	0	0[1]	0[1]

= Unimplemented or Reserved

Figure 25-11. Flash Status Register (FSTAT)

[1] Reset value can deviate from the value shown if a double bit fault is detected during the reset sequence (see Section 25.6).

CCIF, ACCERR, and FPVIOL bits are readable and writable, MGBUSY and MGSTAT bits are readable but not writable, while remaining bits read 0 and are not writable.

Table 25-15. FSTAT Field Descriptions

Field	Description
7 CCIF	**Command Complete Interrupt Flag** — The CCIF flag indicates that a Flash command has completed. The CCIF flag is cleared by writing a 1 to CCIF to launch a command and CCIF will stay low until command completion or command violation. 0 Flash command in progress 1 Flash command has completed
5 ACCERR	**Flash Access Error Flag** — The ACCERR bit indicates an illegal access has occurred to the Flash memory caused by either a violation of the command write sequence (see Section 25.4.4.2) or issuing an illegal Flash command. While ACCERR is set, the CCIF flag cannot be cleared to launch a command. The ACCERR bit is cleared by writing a 1 to ACCERR. Writing a 0 to the ACCERR bit has no effect on ACCERR. 0 No access error detected 1 Access error detected
4 FPVIOL	**Flash Protection Violation Flag** —The FPVIOL bit indicates an attempt was made to program or erase an address in a protected area of P-Flash or EEPROM memory during a command write sequence. The FPVIOL bit is cleared by writing a 1 to FPVIOL. Writing a 0 to the FPVIOL bit has no effect on FPVIOL. While FPVIOL is set, it is not possible to launch a command or start a command write sequence. 0 No protection violation detected 1 Protection violation detected
3 MGBUSY	**Memory Controller Busy Flag** — The MGBUSY flag reflects the active state of the Memory Controller. 0 Memory Controller is idle 1 Memory Controller is busy executing a Flash command (CCIF = 0)
2 RSVD	**Reserved Bit** — This bit is reserved and always reads 0.
1–0 MGSTAT[1:0]	**Memory Controller Command Completion Status Flag** — One or more MGSTAT flag bits are set if an error is detected during execution of a Flash command or during the Flash reset sequence. See Section 25.4.6, “Flash Command Description,” and Section 25.6, “Initialization” for details.

25.3.2.8 Flash Error Status Register (FERSTAT)

The FERSTAT register reflects the error status of internal Flash operations.

Offset Module Base + 0x0007

	7	6	5	4	3	2	1	0
R	0	0	0	0	0	0	DFDIF	SFDIF
W								
Reset	0	0	0	0	0	0	0	0

= Unimplemented or Reserved

Figure 25-12. Flash Error Status Register (FERSTAT)

All flags in the FERSTAT register are readable and only writable to clear the flag.

Table 25-16. FERSTAT Field Descriptions

Field	Description
1 DFDIF	**Double Bit Fault Detect Interrupt Flag** — The setting of the DFDIF flag indicates that a double bit fault was detected in the stored parity and data bits during a Flash array read operation or that a Flash array read operation returning invalid data was attempted on a Flash block that was under a Flash command operation.[1] The DFDIF flag is cleared by writing a 1 to DFDIF. Writing a 0 to DFDIF has no effect on DFDIF.[2] 0 No double bit fault detected 1 Double bit fault detected or a Flash array read operation returning invalid data was attempted while command running
0 SFDIF	**Single Bit Fault Detect Interrupt Flag** — With the IGNSF bit in the FCNFG register clear, the SFDIF flag indicates that a single bit fault was detected in the stored parity and data bits during a Flash array read operation or that a Flash array read operation returning invalid data was attempted on a Flash block that was under a Flash command operation.[1] The SFDIF flag is cleared by writing a 1 to SFDIF. Writing a 0 to SFDIF has no effect on SFDIF. 0 No single bit fault detected 1 Single bit fault detected and corrected or a Flash array read operation returning invalid data was attempted while command running

1 The single bit fault and double bit fault flags are mutually exclusive for parity errors (an ECC fault occurrence can be either single fault or double fault but never both). A simultaneous access collision (Flash array read operation returning invalid data attempted while command running) is indicated when both SFDIF and DFDIF flags are high.

2 There is a one cycle delay in storing the ECC DFDIF and SFDIF fault flags in this register. At least one NOP is required after a flash memory read before checking FERSTAT for the occurrence of ECC errors.

25.3.2.9 P-Flash Protection Register (FPROT)

The FPROT register defines which P-Flash sectors are protected against program and erase operations.

Offset Module Base + 0x0008

	7	6	5	4	3	2	1	0
R	FPOPEN	RNV6	FPHDIS	FPHS[1:0]		FPLDIS	FPLS[1:0]	
W								
Reset	F[1]	F[1]	F[1]	F[1]	F[1]	F[1]	F[1]	F[1]

= Unimplemented or Reserved

Figure 25-13. Flash Protection Register (FPROT)

1 Loaded from IFR Flash configuration field, during reset sequence.

The (unreserved) bits of the FPROT register are writable with the restriction that the size of the protected region can only be increased (see Section 25.3.2.9.1, “P-Flash Protection Restrictions,” and Table 25-21).

During the reset sequence, the FPROT register is loaded with the contents of the P-Flash protection byte in the Flash configuration field at global address 0x3_FF0C located in P-Flash memory (see Table 25-4) as indicated by reset condition ‘F’ in Figure 25-13. To change the P-Flash protection that will be loaded during the reset sequence, the upper sector of the P-Flash memory must be unprotected, then the P-Flash protection byte must be reprogrammed. If a double bit fault is detected while reading the P-Flash phrase containing the P-Flash protection byte during the reset sequence, the FPOPEN bit will be cleared and remaining bits in the FPROT register will be set to leave the P-Flash memory fully protected.

Trying to alter data in any protected area in the P-Flash memory will result in a protection violation error and the FPVIOL bit will be set in the FSTAT register. The block erase of a P-Flash block is not possible if any of the P-Flash sectors contained in the same P-Flash block are protected.

Table 25-17. FPROT Field Descriptions

Field	Description
7 FPOPEN	**Flash Protection Operation Enable** — The FPOPEN bit determines the protection function for program or erase operations as shown in Table 25-18 for the P-Flash block. 0 When FPOPEN is clear, the FPHDIS and FPLDIS bits define unprotected address ranges as specified by the corresponding FPHS and FPLS bits 1 When FPOPEN is set, the FPHDIS and FPLDIS bits enable protection for the address range specified by the corresponding FPHS and FPLS bits
6 RNV[6]	**Reserved Nonvolatile Bit** — The RNV bit should remain in the erased state for future enhancements.
5 FPHDIS	**Flash Protection Higher Address Range Disable** — The FPHDIS bit determines whether there is a protected/unprotected area in a specific region of the P-Flash memory ending with global address 0x3_FFFF. 0 Protection/Unprotection enabled 1 Protection/Unprotection disabled
4–3 FPHS[1:0]	**Flash Protection Higher Address Size** — The FPHS bits determine the size of the protected/unprotected area in P-Flash memory as shown inTable 25-19. The FPHS bits can only be written to while the FPHDIS bit is set.
2 FPLDIS	**Flash Protection Lower Address Range Disable** — The FPLDIS bit determines whether there is a protected/unprotected area in a specific region of the P-Flash memory beginning with global address 0x3_8000. 0 Protection/Unprotection enabled 1 Protection/Unprotection disabled
1–0 FPLS[1:0]	**Flash Protection Lower Address Size** — The FPLS bits determine the size of the protected/unprotected area in P-Flash memory as shown in Table 25-20. The FPLS bits can only be written to while the FPLDIS bit is set.

Table 25-18. P-Flash Protection Function

FPOPEN	FPHDIS	FPLDIS	Function[1]
1	1	1	No P-Flash Protection
1	1	0	Protected Low Range
1	0	1	Protected High Range
1	0	0	Protected High and Low Ranges
0	1	1	Full P-Flash Memory Protected
0	1	0	Unprotected Low Range
0	0	1	Unprotected High Range
0	0	0	Unprotected High and Low Ranges

[1] For range sizes, refer to Table 25-19 and Table 25-20.

Table 25-19. P-Flash Protection Higher Address Range

FPHS[1:0]	Global Address Range	Protected Size
00	0x3_F800–0x3_FFFF	2 Kbytes
01	0x3_F000–0x3_FFFF	4 Kbytes
10	0x3_E000–0x3_FFFF	8 Kbytes
11	0x3_C000–0x3_FFFF	16 Kbytes

Table 25-20. P-Flash Protection Lower Address Range

FPLS[1:0]	Global Address Range	Protected Size
00	0x3_8000–0x3_83FF	1 Kbyte
01	0x3_8000–0x3_87FF	2 Kbytes
10	0x3_8000–0x3_8FFF	4 Kbytes
11	0x3_8000–0x3_9FFF	8 Kbytes

All possible P-Flash protection scenarios are shown in Figure 25-14 . Although the protection scheme is loaded from the Flash memory at global address 0x3_FF0C during the reset sequence, it can be changed by the user. The P-Flash protection scheme can be used by applications requiring reprogramming in single chip mode while providing as much protection as possible if reprogramming is not required.

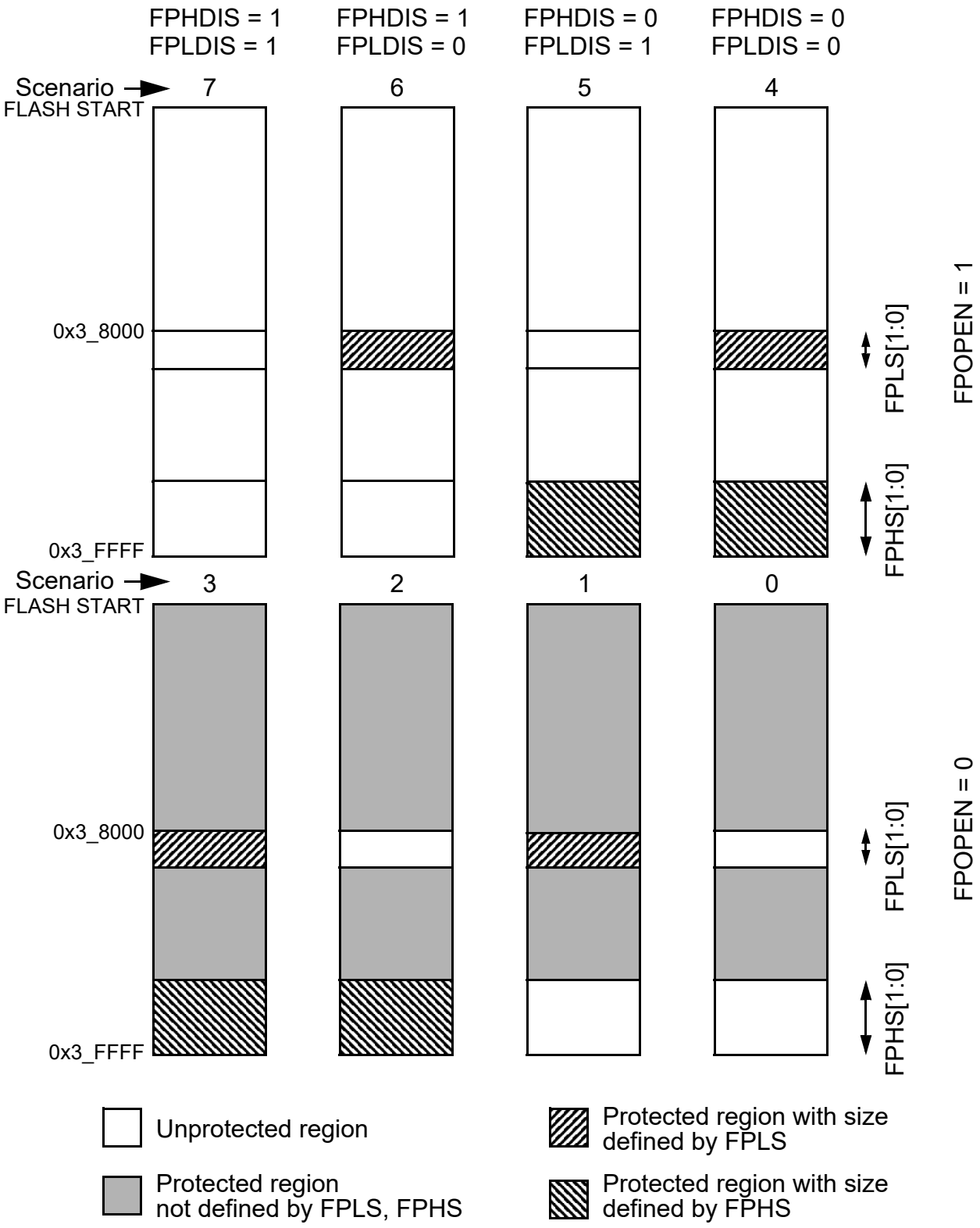

Figure 25-14. P-Flash Protection Scenarios

25.3.2.9.1 P-Flash Protection Restrictions

The general guideline is that P-Flash protection can only be added and not removed. Table 25-21 specifies all valid transitions between P-Flash protection scenarios. Any attempt to write an invalid scenario to the FPROT register will be ignored. The contents of the FPROT register reflect the active protection scenario. See the FPHS and FPLS bit descriptions for additional restrictions.

Table 25-21. P-Flash Protection Scenario Transitions

From Protection Scenario	To Protection Scenario[1]							
	0	1	2	3	4	5	6	7
0	X	X	X	X				
1		X		X				
2			X	X				
3				X				
4				X	X			
5			X	X	X	X		
6		X		X	X		X	
7	X	X	X	X	X	X	X	X

1 Allowed transitions marked with X, see Figure 25-14 for a definition of the scenarios.

25.3.2.10 EEPROM Protection Register (EEPROT)

The EEPROT register defines which EEPROM sectors are protected against program and erase operations.

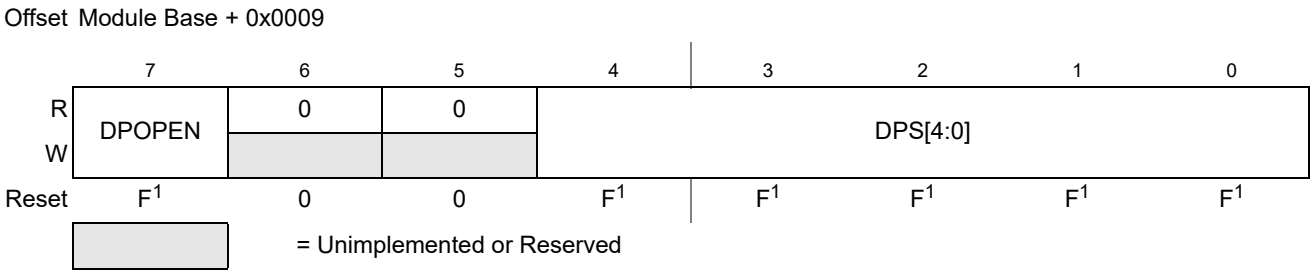

Figure 25-15. EEPROM Protection Register (EEPROT)

1 Loaded from IFR Flash configuration field, during reset sequence.

The (unreserved) bits of the EEPROT register are writable with the restriction that protection can be added but not removed. Writes must increase the DPS value and the DPOPEN bit can only be written from 1 (protection disabled) to 0 (protection enabled). If the DPOPEN bit is set, the state of the DPS bits is irrelevant.

During the reset sequence, fields DPOPEN and DPS of the EEPROT register are loaded with the contents of the EEPROM protection byte in the Flash configuration field at global address 0x3_FF0D located in P-Flash memory (see Table 25-4) as indicated by reset condition F in Table 25-23. To change the EEPROM protection that will be loaded during the reset sequence, the P-Flash sector containing the EEPROM protection byte must be unprotected, then the EEPROM protection byte must be programmed. If a double bit fault is detected while reading the P-Flash phrase containing the EEPROM protection byte during the reset sequence, the DPOPEN bit will be cleared and DPS bits will be set to leave the EEPROM memory fully protected.

Trying to alter data in any protected area in the EEPROM memory will result in a protection violation error and the FPVIOL bit will be set in the FSTAT register. Block erase of the EEPROM memory is not possible if any of the EEPROM sectors are protected.

Table 25-22. EEPROT Field Descriptions

Field	Description
7 DPOPEN	EEPROM Protection Control 0 Enables EEPROM memory protection from program and erase with protected address range defined by DPS bits 1 Disables EEPROM memory protection from program and erase
4–0 DPS[4:0]	**EEPROM Protection Size** — The DPS[4:0] bits determine the size of the protected area in the EEPROM memory as shown inTable 25-23 .

Table 25-23. EEPROM Protection Address Range

DPS[4:0]	Global Address Range	Protected Size
00000	0x0_0400 – 0x0_041F	32 bytes
00001	0x0_0400 – 0x0_043F	64 bytes
00010	0x0_0400 – 0x0_045F	96 bytes
00011	0x0_0400 – 0x0_047F	128 bytes
00100	0x0_0400 – 0x0_049F	160 bytes
00101	0x0_0400 – 0x0_04BF	192 bytes
The Protection Size goes on enlarging in step of 32 bytes, for each DPS value increasing of one. . . .		
11111 - to - 11111	0x0_0400 – 0x0_07FF	1,024 bytes

25.3.2.11 Flash Common Command Object Register (FCCOB)

The FCCOB is an array of six words addressed via the CCOBIX index found in the FCCOBIX register. Byte wide reads and writes are allowed to the FCCOB register.

Offset Module Base + 0x000A

	7	6	5	4	3	2	1	0
R W	CCOB[15:8]							
Reset	0	0	0	0	0	0	0	0

Figure 25-16. Flash Common Command Object High Register (FCCOBHI)

Offset Module Base + 0x000B

	7	6	5	4	3	2	1	0
R W	CCOB[7:0]							
Reset	0	0	0	0	0	0	0	0

Figure 25-17. Flash Common Command Object Low Register (FCCOBLO)

25.3.2.11.1 FCCOB - NVM Command Mode

NVM command mode uses the indexed FCCOB register to provide a command code and its relevant parameters to the Memory Controller. The user first sets up all required FCCOB fields and then initiates the command's execution by writing a 1 to the CCIF bit in the FSTAT register (a 1 written by the user clears the CCIF command completion flag to 0). When the user clears the CCIF bit in the FSTAT register all FCCOB parameter fields are locked and cannot be changed by the user until the command completes (as evidenced by the Memory Controller returning CCIF to 1). Some commands return information to the FCCOB register array.

The generic format for the FCCOB parameter fields in NVM command mode is shown in Table 25-24. The return values are available for reading after the CCIF flag in the FSTAT register has been returned to 1 by the Memory Controller. Writes to the unimplemented parameter fields (CCOBIX = 110 and CCOBIX = 111) are ignored with reads from these fields returning 0x0000.

Table 25-24 shows the generic Flash command format. The high byte of the first word in the CCOB array contains the command code, followed by the parameters for this specific Flash command. For details on the FCCOB settings required by each command, see the Flash command descriptions in Section 25.4.6.

Table 25-24. FCCOB - NVM Command Mode (Typical Usage)

CCOBIX[2:0]	Byte	FCCOB Parameter Fields (NVM Command Mode)
000	HI	FCMD[7:0] defining Flash command
	LO	6'h0, Global address [17:16]
001	HI	Global address [15:8]
	LO	Global address [7:0]

Table 25-24. FCCOB - NVM Command Mode (Typical Usage)

CCOBIX[2:0]	Byte	FCCOB Parameter Fields (NVM Command Mode)
010	HI	Data 0 [15:8]
	LO	Data 0 [7:0]
011	HI	Data 1 [15:8]
	LO	Data 1 [7:0]
100	HI	Data 2 [15:8]
	LO	Data 2 [7:0]
101	HI	Data 3 [15:8]
	LO	Data 3 [7:0]

25.3.2.12 Flash Reserved1 Register (FRSV1)

This Flash register is reserved for factory testing.

Offset Module Base + 0x000C

	7	6	5	4	3	2	1	0
R	0	0	0	0	0	0	0	0
W								
Reset	0	0	0	0	0	0	0	0

= Unimplemented or Reserved

Figure 25-18. Flash Reserved1 Register (FRSV1)

All bits in the FRSV1 register read 0 and are not writable.

25.3.2.13 Flash Reserved2 Register (FRSV2)

This Flash register is reserved for factory testing.

Offset Module Base + 0x000D

	7	6	5	4	3	2	1	0
R	0	0	0	0	0	0	0	0
W								
Reset	0	0	0	0	0	0	0	0

= Unimplemented or Reserved

Figure 25-19. Flash Reserved2 Register (FRSV2)

All bits in the FRSV2 register read 0 and are not writable.

25.3.2.14 Flash Reserved3 Register (FRSV3)

This Flash register is reserved for factory testing.

Offset Module Base + 0x000E

	7	6	5	4	3	2	1	0
R	0	0	0	0	0	0	0	0
W								
Reset	0	0	0	0	0	0	0	0

= Unimplemented or Reserved

Figure 25-20. Flash Reserved3 Register (FRSV3)

All bits in the FRSV3 register read 0 and are not writable.

25.3.2.15 Flash Reserved4 Register (FRSV4)

This Flash register is reserved for factory testing.

Offset Module Base + 0x000F

	7	6	5	4	3	2	1	0
R	0	0	0	0	0	0	0	0
W								
Reset	0	0	0	0	0	0	0	0

= Unimplemented or Reserved

Figure 25-21. Flash Reserved4 Register (FRSV4)

All bits in the FRSV4 register read 0 and are not writable.

25.3.2.16 Flash Option Register (FOPT)

The FOPT register is the Flash option register.

Offset Module Base + 0x0010

	7	6	5	4	3	2	1	0
R	NV[7:0]							
W								
Reset	F[1]	F[1]	F[1]	F[1]	F[1]	F[1]	F[1]	F[1]

= Unimplemented or Reserved

Figure 25-22. Flash Option Register (FOPT)

1 Loaded from IFR Flash configuration field, during reset sequence.

All bits in the FOPT register are readable but are not writable.

During the reset sequence, the FOPT register is loaded from the Flash nonvolatile byte in the Flash configuration field at global address 0x3_FF0E located in P-Flash memory (see Table 25-4) as indicated by reset condition F in Figure 25-22. If a double bit fault is detected while reading the P-Flash phrase containing the Flash nonvolatile byte during the reset sequence, all bits in the FOPT register will be set.

Table 25-25. FOPT Field Descriptions

Field	Description
7–0 NV[7:0]	**Nonvolatile Bits** — The NV[7:0] bits are available as nonvolatile bits. Refer to the device user guide for proper use of the NV bits.

25.3.2.17 Flash Reserved5 Register (FRSV5)

This Flash register is reserved for factory testing.

Offset Module Base + 0x0011

	7	6	5	4	3	2	1	0
R	0	0	0	0	0	0	0	0
W								
Reset	0	0	0	0	0	0	0	0

= Unimplemented or Reserved

Figure 25-23. Flash Reserved5 Register (FRSV5)

All bits in the FRSV5 register read 0 and are not writable.

25.3.2.18 Flash Reserved6 Register (FRSV6)

This Flash register is reserved for factory testing.

Offset Module Base + 0x0012

	7	6	5	4	3	2	1	0
R	0	0	0	0	0	0	0	0
W								
Reset	0	0	0	0	0	0	0	0

= Unimplemented or Reserved

Figure 25-24. Flash Reserved6 Register (FRSV6)

All bits in the FRSV6 register read 0 and are not writable.

25.3.2.19 Flash Reserved7 Register (FRSV7)

This Flash register is reserved for factory testing.

Offset Module Base + 0x0013

	7	6	5	4	3	2	1	0
R	0	0	0	0	0	0	0	0
W								
Reset	0	0	0	0	0	0	0	0

= Unimplemented or Reserved

Figure 25-25. Flash Reserved7 Register (FRSV7)

All bits in the FRSV7 register read 0 and are not writable.

25.4 Functional Description

25.4.1 Modes of Operation

The FTMRG32K1 module provides the modes of operation normal and special . The operating mode is determined by module-level inputs and affects the FCLKDIV, FCNFG, and EEPROT registers (see Table 25-27).

25.4.2 IFR Version ID Word

The version ID word is stored in the IFR at address 0x0_40B6. The contents of the word are defined in Table 25-26.

Table 25-26. IFR Version ID Fields

[15:4]	[3:0]
Reserved	VERNUM

- VERNUM: Version number. The first version is number 0b_0001 with both 0b_0000 and 0b_1111 meaning ‘none’.

25.4.3 Internal NVM resource (NVMRES)

IFR is an internal NVM resource readable by CPU , when NVMRES is active. The IFR fields are shown in Table 25-5.

The NVMRES global address map is shown in Table 25-6.

25.4.4 Flash Command Operations

Flash command operations are used to modify Flash memory contents.

The next sections describe:

- How to write the FCLKDIV register that is used to generate a time base (FCLK) derived from BUSCLK for Flash program and erase command operations
- The command write sequence used to set Flash command parameters and launch execution
- Valid Flash commands available for execution, according to MCU functional mode and MCU security state.

25.4.4.1 Writing the FCLKDIV Register

Prior to issuing any Flash program or erase command after a reset, the user is required to write the FCLKDIV register to divide BUSCLK down to a target FCLK of 1 MHz. Table 25-8 shows recommended values for the FDIV field based on BUSCLK frequency.

NOTE

Programming or erasing the Flash memory cannot be performed if the bus clock runs at less than 0.8 MHz. Setting FDIV too high can destroy the Flash memory due to overstress. Setting FDIV too low can result in incomplete programming or erasure of the Flash memory cells.

When the FCLKDIV register is written, the FDIVLD bit is set automatically. If the FDIVLD bit is 0, the FCLKDIV register has not been written since the last reset. If the FCLKDIV register has not been written, any Flash program or erase command loaded during a command write sequence will not execute and the ACCERR bit in the FSTAT register will set.

25.4.4.2 Command Write Sequence

The Memory Controller will launch all valid Flash commands entered using a command write sequence.

Before launching a command, the ACCERR and FPVIOL bits in the FSTAT register must be clear (see Section 25.3.2.7) and the CCIF flag should be tested to determine the status of the current command write sequence. If CCIF is 0, the previous command write sequence is still active, a new command write sequence cannot be started, and all writes to the FCCOB register are ignored.

25.4.4.2.1 Define FCCOB Contents

The FCCOB parameter fields must be loaded with all required parameters for the Flash command being executed. Access to the FCCOB parameter fields is controlled via the CCOBIX bits in the FCCOBIX register (see Section 25.3.2.3).

The contents of the FCCOB parameter fields are transferred to the Memory Controller when the user clears the CCIF command completion flag in the FSTAT register (writing 1 clears the CCIF to 0). The CCIF flag will remain clear until the Flash command has completed. Upon completion, the Memory Controller will return CCIF to 1 and the FCCOB register will be used to communicate any results. The flow for a generic command write sequence is shown in Figure 25-26.

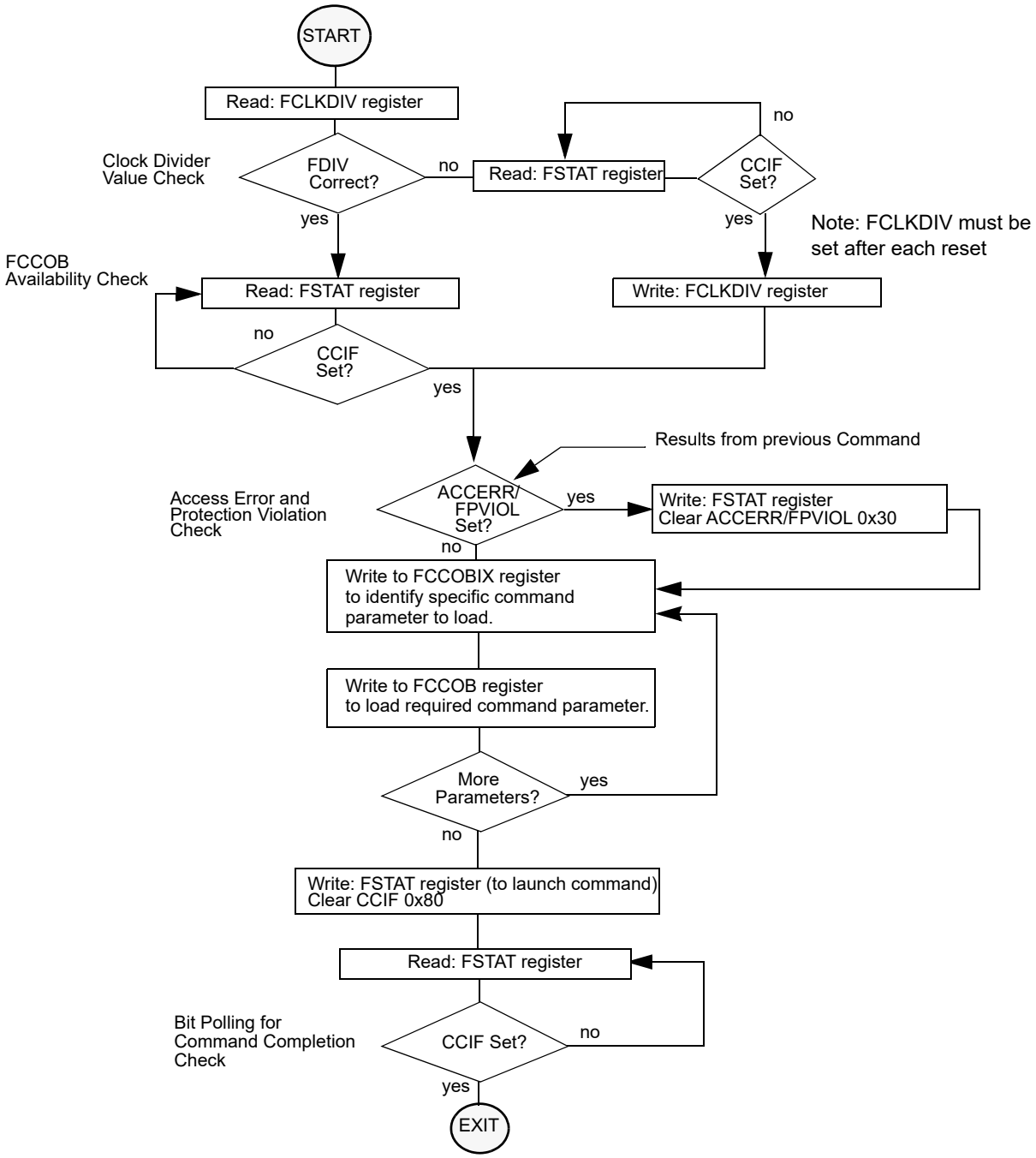

Figure 25-26. Generic Flash Command Write Sequence Flowchart

25.4.4.3 Valid Flash Module Commands

Table 25-27 present the valid Flash commands, as enabled by the combination of the functional MCU mode (Normal SingleChip NS, Special Singlechip SS) with the MCU security state (Unsecured, Secured).

Special Singlechip mode is selected by input mmc_ss_mode_ts2 asserted. MCU Secured state is selected by input mmc_secure input asserted.

Table 25-27. Flash Commands by Mode and Security State

FCMD	Command	Unsecured		Secured	
		NS[1]	SS[2]	NS[3]	SS[4]
0x01	Erase Verify All Blocks	*	*	*	*
0x02	Erase Verify Block	*	*	*	*
0x03	Erase Verify P-Flash Section	*	*	*	
0x04	Read Once	*	*	*	
0x06	Program P-Flash	*	*	*	
0x07	Program Once	*	*	*	
0x08	Erase All Blocks		*		*
0x09	Erase Flash Block	*	*	*	
0x0A	Erase P-Flash Sector	*	*	*	
0x0B	Unsecure Flash		*		*
0x0C	Verify Backdoor Access Key	*		*	
0x0D	Set User Margin Level	*	*	*	
0x0E	Set Field Margin Level		*		
0x10	Erase Verify EEPROM Section	*	*	*	
0x11	Program EEPROM	*	*	*	
0x12	Erase EEPROM Sector	*	*	*	

1 Unsecured Normal Single Chip mode
2 Unsecured Special Single Chip mode.
3 Secured Normal Single Chip mode.
4 Secured Special Single Chip mode.

25.4.4.4 P-Flash Commands

Table 25-28 summarizes the valid P-Flash commands along with the effects of the commands on the P-Flash block and other resources within the Flash module.

Table 25-28. P-Flash Commands

FCMD	Command	Function on P-Flash Memory
0x01	Erase Verify All Blocks	Verify that all P-Flash (and EEPROM) blocks are erased.

Table 25-28. P-Flash Commands

FCMD	Command	Function on P-Flash Memory
0x02	Erase Verify Block	Verify that a P-Flash block is erased.
0x03	Erase Verify P-Flash Section	Verify that a given number of words starting at the address provided are erased.
0x04	Read Once	Read a dedicated 64 byte field in the nonvolatile information register in P-Flash block that was previously programmed using the Program Once command.
0x06	Program P-Flash	Program a phrase in a P-Flash block.
0x07	Program Once	Program a dedicated 64 byte field in the nonvolatile information register in P-Flash block that is allowed to be programmed only once.
0x08	Erase All Blocks	Erase all P-Flash (and EEPROM) blocks. An erase of all Flash blocks is only possible when the FPLDIS, FPHDIS, and FPOPEN bits in the FPROT register and the DPOPEN bit in the EEPROT register are set prior to launching the command.
0x09	Erase Flash Block	Erase a P-Flash (or EEPROM) block. An erase of the full P-Flash block is only possible when FPLDIS, FPHDIS and FPOPEN bits in the FPROT register are set prior to launching the command.
0x0A	Erase P-Flash Sector	Erase all bytes in a P-Flash sector.
0x0B	Unsecure Flash	Supports a method of releasing MCU security by erasing all P-Flash (and EEPROM) blocks and verifying that all P-Flash (and EEPROM) blocks are erased.
0x0C	Verify Backdoor Access Key	Supports a method of releasing MCU security by verifying a set of security keys.
0x0D	Set User Margin Level	Specifies a user margin read level for all P-Flash blocks.
0x0E	Set Field Margin Level	Specifies a field margin read level for all P-Flash blocks (special modes only).

25.4.4.5 EEPROM Commands

Table 25-29 summarizes the valid EEPROM commands along with the effects of the commands on the EEPROM block.

Table 25-29. EEPROM Commands

FCMD	Command	Function on EEPROM Memory
0x01	Erase Verify All Blocks	Verify that all EEPROM (and P-Flash) blocks are erased.
0x02	Erase Verify Block	Verify that the EEPROM block is erased.

Table 25-29. EEPROM Commands

FCMD	Command	Function on EEPROM Memory
0x08	Erase All Blocks	Erase all EEPROM (and P-Flash) blocks. An erase of all Flash blocks is only possible when the FPLDIS, FPHDIS, and FPOPEN bits in the FPROT register and the DPOPEN bit in the EEPROT register are set prior to launching the command.
0x09	Erase Flash Block	Erase a EEPROM (or P-Flash) block. An erase of the full EEPROM block is only possible when DPOPEN bit in the EEPROT register is set prior to launching the command.
0x0B	Unsecure Flash	Supports a method of releasing MCU security by erasing all EEPROM (and P-Flash) blocks and verifying that all EEPROM (and P-Flash) blocks are erased.
0x0D	Set User Margin Level	Specifies a user margin read level for the EEPROM block.
0x0E	Set Field Margin Level	Specifies a field margin read level for the EEPROM block (special modes only).
0x10	Erase Verify EEPROM Section	Verify that a given number of words starting at the address provided are erased.
0x11	Program EEPROM	Program up to four words in the EEPROM block.
0x12	Erase EEPROM Sector	Erase all bytes in a sector of the EEPROM block.

25.4.5 Allowed Simultaneous P-Flash and EEPROM Operations

Only the operations marked ‘OK’ in Table 25-30 are permitted to be run simultaneously on the Program Flash and EEPROM blocks. Some operations cannot be executed simultaneously because certain hardware resources are shared by the two memories. The priority has been placed on permitting Program Flash reads while program and erase operations execute on the EEPROM, providing read (P-Flash) while write (EEPROM) functionality.

Table 25-30. Allowed P-Flash and EEPROM Simultaneous Operations

	EEPROM				
Program Flash	**Read**	**Margin Read[1]**	**Program**	**Sector Erase**	**Mass Erase[2]**
Read		OK	OK	OK	
Margin Read[1]					
Program					
Sector Erase					
Mass Erase[2]					OK

1 A ‘Margin Read’ is any read after executing the margin setting commands ‘Set User Margin Level’ or ‘Set Field Margin Level’ with anything but the ‘normal’ level specified. See the Note on margin settings in Section 25.4.6.12 and Section 25.4.6.13.

2 The ‘Mass Erase’ operations are commands ‘Erase All Blocks’ and ‘Erase Flash Block’

25.4.6 Flash Command Description

This section provides details of all available Flash commands launched by a command write sequence. The ACCERR bit in the FSTAT register will be set during the command write sequence if any of the following illegal steps are performed, causing the command not to be processed by the Memory Controller:

- Starting any command write sequence that programs or erases Flash memory before initializing the FCLKDIV register
- Writing an invalid command as part of the command write sequence
- For additional possible errors, refer to the error handling table provided for each command

If a Flash block is read during execution of an algorithm (CCIF = 0) on that same block, the read operation will return invalid data if both flags SFDIF and DFDIF are set. If the SFDIF or DFDIF flags were not previously set when the invalid read operation occurred, both the SFDIF and DFDIF flags will be set.

If the ACCERR or FPVIOL bits are set in the FSTAT register, the user must clear these bits before starting any command write sequence (see Section 25.3.2.7).

CAUTION

A Flash word or phrase must be in the erased state before being programmed. Cumulative programming of bits within a Flash word or phrase is not allowed.

25.4.6.1 Erase Verify All Blocks Command

The Erase Verify All Blocks command will verify that all P-Flash and EEPROM blocks have been erased.

Table 25-31. Erase Verify All Blocks Command FCCOB Requirements

CCOBIX[2:0]	FCCOB Parameters	
000	0x01	Not required

Upon clearing CCIF to launch the Erase Verify All Blocks command, the Memory Controller will verify that the entire Flash memory space is erased. The CCIF flag will set after the Erase Verify All Blocks operation has completed. If all blocks are not erased, it means blank check failed, both MGSTAT bits will be set.

Table 25-32. Erase Verify All Blocks Command Error Handling

Register	Error Bit	Error Condition
FSTAT	ACCERR	Set if CCOBIX[2:0] != 000 at command launch
	FPVIOL	None
	MGSTAT1	Set if any errors have been encountered during the read[1] or if blank check failed .
	MGSTAT0	Set if any non-correctable errors have been encountered during the read[1] or if blank check failed.

[1] As found in the memory map for FTMRG32K1.

25.4.6.2 Erase Verify Block Command

The Erase Verify Block command allows the user to verify that an entire P-Flash or EEPROM block has been erased. The FCCOB FlashBlockSelectionCode[1:0] bits determine which block must be verified.

Table 25-33. Erase Verify Block Command FCCOB Requirements

CCOBIX[2:0]	FCCOB Parameters	
000	0x02	Flash block selection code [1:0]. See Table 25-34

Table 25-34. Flash block selection code description

Selection code[1:0]	Flash block to be verified
00	EEPROM
01	Invalid (ACCERR)
10	Invalid (ACCERR)
11	P-Flash

Upon clearing CCIF to launch the Erase Verify Block command, the Memory Controller will verify that the selected P-Flash or EEPROM block is erased. The CCIF flag will set after the Erase Verify Block operation has completed.If the block is not erased, it means blank check failed, both MGSTAT bits will be set.

Table 25-35. Erase Verify Block Command Error Handling

Register	Error Bit	Error Condition
FSTAT	ACCERR	Set if CCOBIX[2:0] != 000 at command launch
		Set if an invalid FlashBlockSelectionCode[1:0] is supplied
	FPVIOL	None
	MGSTAT1	Set if any errors have been encountered during the read or if blank check failed.
	MGSTAT0	Set if any non-correctable errors have been encountered during the read or if blank check failed.

25.4.6.3 Erase Verify P-Flash Section Command

The Erase Verify P-Flash Section command will verify that a section of code in the P-Flash memory is erased. The Erase Verify P-Flash Section command defines the starting point of the code to be verified and the number of phrases.

Table 25-36. Erase Verify P-Flash Section Command FCCOB Requirements

CCOBIX[2:0]	FCCOB Parameters	
000	0x03	Global address [17:16] of a P-Flash block
001	Global address [15:0] of the first phrase to be verified	
010	Number of phrases to be verified	

Upon clearing CCIF to launch the Erase Verify P-Flash Section command, the Memory Controller will verify the selected section of Flash memory is erased. The CCIF flag will set after the Erase Verify P-Flash Section operation has completed. If the section is not erased, it means blank check failed, both MGSTAT bits will be set.

Table 25-37. Erase Verify P-Flash Section Command Error Handling

Register	Error Bit	Error Condition
FSTAT	ACCERR	Set if CCOBIX[2:0] != 010 at command launch
		Set if command not available in current mode (see Table 25-27)
		Set if an invalid global address [17:0] is supplied see Table 25-3)
		Set if a misaligned phrase address is supplied (global address [2:0] != 000)
		Set if the requested section crosses a the P-Flash address boundary
	FPVIOL	None
	MGSTAT1	Set if any errors have been encountered during the read or if blank check failed.
	MGSTAT0	Set if any non-correctable errors have been encountered during the read or if blank check failed.

25.4.6.4 Read Once Command

The Read Once command provides read access to a reserved 64 byte field (8 phrases) located in the nonvolatile information register of P-Flash. The Read Once field is programmed using the Program Once command described in Section 25.4.6.6. The Read Once command must not be executed from the Flash block containing the Program Once reserved field to avoid code runaway.

Table 25-38. Read Once Command FCCOB Requirements

CCOBIX[2:0]	FCCOB Parameters	
000	0x04	Not Required
001	Read Once phrase index (0x0000 - 0x0007)	
010	Read Once word 0 value	
011	Read Once word 1 value	
100	Read Once word 2 value	
101	Read Once word 3 value	

Upon clearing CCIF to launch the Read Once command, a Read Once phrase is fetched and stored in the FCCOB indexed register. The CCIF flag will set after the Read Once operation has completed. Valid phrase index values for the Read Once command range from 0x0000 to 0x0007. During execution of the Read Once command, any attempt to read addresses within P-Flash block will return invalid data.

Table 25-39. Read Once Command Error Handling

Register	Error Bit	Error Condition
FSTAT	ACCERR	Set if CCOBIX[2:0] != 001 at command launch
		Set if command not available in current mode (see Table 25-27)
		Set if an invalid phrase index is supplied
	FPVIOL	None
	MGSTAT1	Set if any errors have been encountered during the read
	MGSTAT0	Set if any non-correctable errors have been encountered during the read

25.4.6.5 Program P-Flash Command

The Program P-Flash operation will program a previously erased phrase in the P-Flash memory using an embedded algorithm.

CAUTION

A P-Flash phrase must be in the erased state before being programmed. Cumulative programming of bits within a Flash phrase is not allowed.

Table 25-40. Program P-Flash Command FCCOB Requirements

CCOBIX[2:0]	FCCOB Parameters	
000	0x06	Global address [17:16] to identify P-Flash block
001	Global address [15:0] of phrase location to be programmed[1]	
010	Word 0 program value	
011	Word 1 program value	
100	Word 2 program value	
101	Word 3 program value	

1 Global address [2:0] must be 000

Upon clearing CCIF to launch the Program P-Flash command, the Memory Controller will program the data words to the supplied global address and will then proceed to verify the data words read back as expected. The CCIF flag will set after the Program P-Flash operation has completed.

Table 25-41. Program P-Flash Command Error Handling

Register	Error Bit	Error Condition
FSTAT	ACCERR	Set if CCOBIX[2:0] != 101 at command launch
		Set if command not available in current mode (see Table 25-27)
		Set if an invalid global address [17:0] is supplied see Table 25-3)
		Set if a misaligned phrase address is supplied (global address [2:0] != 000)
	FPVIOL	Set if the global address [17:0] points to a protected area
	MGSTAT1	Set if any errors have been encountered during the verify operation
	MGSTAT0	Set if any non-correctable errors have been encountered during the verify operation

25.4.6.6 Program Once Command

The Program Once command restricts programming to a reserved 64 byte field (8 phrases) in the nonvolatile information register located in P-Flash. The Program Once reserved field can be read using the Read Once command as described in Section 25.4.6.4. The Program Once command must only be issued once since the nonvolatile information register in P-Flash cannot be erased. The Program Once command must not be executed from the Flash block containing the Program Once reserved field to avoid code runaway.

Table 25-42. Program Once Command FCCOB Requirements

CCOBIX[2:0]	FCCOB Parameters	
000	0x07	Not Required
001	Program Once phrase index (0x0000 - 0x0007)	
010	Program Once word 0 value	
011	Program Once word 1 value	
100	Program Once word 2 value	
101	Program Once word 3 value	

Upon clearing CCIF to launch the Program Once command, the Memory Controller first verifies that the selected phrase is erased. If erased, then the selected phrase will be programmed and then verified with read back. The CCIF flag will remain clear, setting only after the Program Once operation has completed.

The reserved nonvolatile information register accessed by the Program Once command cannot be erased and any attempt to program one of these phrases a second time will not be allowed. Valid phrase index values for the Program Once command range from 0x0000 to 0x0007. During execution of the Program Once command, any attempt to read addresses within P-Flash will return invalid data.

Table 25-43. Program Once Command Error Handling

Register	Error Bit	Error Condition
FSTAT	ACCERR	Set if CCOBIX[2:0] != 101 at command launch
		Set if command not available in current mode (see Table 25-27)
		Set if an invalid phrase index is supplied
		Set if the requested phrase has already been programmed[1]
	FPVIOL	None
	MGSTAT1	Set if any errors have been encountered during the verify operation
	MGSTAT0	Set if any non-correctable errors have been encountered during the verify operation

1 If a Program Once phrase is initially programmed to 0xFFFF_FFFF_FFFF_FFFF, the Program Once command will be allowed to execute again on that same phrase.

25.4.6.7 Erase All Blocks Command

The Erase All Blocks operation will erase the entire P-Flash and EEPROM memory space.

Table 25-44. Erase All Blocks Command FCCOB Requirements

CCOBIX[2:0]	FCCOB Parameters	
000	0x08	Not required

Upon clearing CCIF to launch the Erase All Blocks command, the Memory Controller will erase the entire Flash memory space and verify that it is erased. If the Memory Controller verifies that the entire Flash memory space was properly erased, security will be released. During the execution of this command (CCIF=0) the user must not write to any Flash module register. The CCIF flag will set after the Erase All Blocks operation has completed.

Table 25-45. Erase All Blocks Command Error Handling

Register	Error Bit	Error Condition
FSTAT	ACCERR	Set if CCOBIX[2:0] != 000 at command launch
		Set if command not available in current mode (see Table 25-27)
	FPVIOL	Set if any area of the P-Flash or EEPROM memory is protected
	MGSTAT1	Set if any errors have been encountered during the verify operation[1]
	MGSTAT0	Set if any non-correctable errors have been encountered during the verify operation

1 As found in the memory map for FTMRG32K1.

25.4.6.8 Erase Flash Block Command

The Erase Flash Block operation will erase all addresses in a P-Flash or EEPROM block.

Table 25-46. Erase Flash Block Command FCCOB Requirements

CCOBIX[2:0]	FCCOB Parameters	
000	0x09	Global address [17:16] to identify Flash block
001	Global address [15:0] in Flash block to be erased	

Upon clearing CCIF to launch the Erase Flash Block command, the Memory Controller will erase the selected Flash block and verify that it is erased. The CCIF flag will set after the Erase Flash Block operation has completed.

Table 25-47. Erase Flash Block Command Error Handling

Register	Error Bit	Error Condition
FSTAT	ACCERR	Set if CCOBIX[2:0] != 001 at command launch
		Set if command not available in current mode (see Table 25-27)
		Set if an invalid global address [17:16] is supplied
		Set if the supplied P-Flash address is not phrase-aligned or if the EEPROM address is not word-aligned
	FPVIOL	Set if an area of the selected Flash block is protected
	MGSTAT1	Set if any errors have been encountered during the verify operation
	MGSTAT0	Set if any non-correctable errors have been encountered during the verify operation

25.4.6.9 Erase P-Flash Sector Command

The Erase P-Flash Sector operation will erase all addresses in a P-Flash sector.

Table 25-48. Erase P-Flash Sector Command FCCOB Requirements

CCOBIX[2:0]	FCCOB Parameters	
000	0x0A	Global address [17:16] to identify P-Flash block to be erased
001	Global address [15:0] anywhere within the sector to be erased. Refer to Section 25.1.2.1 for the P-Flash sector size.	

Upon clearing CCIF to launch the Erase P-Flash Sector command, the Memory Controller will erase the selected Flash sector and then verify that it is erased. The CCIF flag will be set after the Erase P-Flash Sector operation has completed.

Table 25-49. Erase P-Flash Sector Command Error Handling

Register	Error Bit	Error Condition
FSTAT	ACCERR	Set if CCOBIX[2:0] != 001 at command launch
		Set if command not available in current mode (see Table 25-27)
		Set if an invalid global address [17:16] is supplied see Table 25-3)[1]
		Set if a misaligned phrase address is supplied (global address [2:0] != 000)
	FPVIOL	Set if the selected P-Flash sector is protected
	MGSTAT1	Set if any errors have been encountered during the verify operation
	MGSTAT0	Set if any non-correctable errors have been encountered during the verify operation

1 As defined by the memory map for FTMRG32K1.

25.4.6.10 Unsecure Flash Command

The Unsecure Flash command will erase the entire P-Flash and EEPROM memory space and, if the erase is successful, will release security.

Table 25-50. Unsecure Flash Command FCCOB Requirements

CCOBIX[2:0]	FCCOB Parameters	
000	0x0B	Not required

Upon clearing CCIF to launch the Unsecure Flash command, the Memory Controller will erase the entire P-Flash and EEPROM memory space and verify that it is erased. If the Memory Controller verifies that the entire Flash memory space was properly erased, security will be released. If the erase verify is not successful, the Unsecure Flash operation sets MGSTAT1 and terminates without changing the security state. During the execution of this command (CCIF=0) the user must not write to any Flash module register. The CCIF flag is set after the Unsecure Flash operation has completed.

Table 25-51. Unsecure Flash Command Error Handling

Register	Error Bit	Error Condition
FSTAT	ACCERR	Set if CCOBIX[2:0] != 000 at command launch
		Set if command not available in current mode (see Table 25-27)
	FPVIOL	Set if any area of the P-Flash or EEPROM memory is protected
	MGSTAT1	Set if any errors have been encountered during the verify operation
	MGSTAT0	Set if any non-correctable errors have been encountered during the verify operation

25.4.6.11 Verify Backdoor Access Key Command

The Verify Backdoor Access Key command will only execute if it is enabled by the KEYEN bits in the FSEC register (see Table 25-10). The Verify Backdoor Access Key command releases security if

user-supplied keys match those stored in the Flash security bytes of the Flash configuration field (see Table 25-4). The Verify Backdoor Access Key command must not be executed from the Flash block containing the backdoor comparison key to avoid code runaway.

Table 25-52. Verify Backdoor Access Key Command FCCOB Requirements

CCOBIX[2:0]	FCCOB Parameters	
000	0x0C	Not required
001	Key 0	
010	Key 1	
011	Key 2	
100	Key 3	

Upon clearing CCIF to launch the Verify Backdoor Access Key command, the Memory Controller will check the FSEC KEYEN bits to verify that this command is enabled. If not enabled, the Memory Controller sets the ACCERR bit in the FSTAT register and terminates. If the command is enabled, the Memory Controller compares the key provided in FCCOB to the backdoor comparison key in the Flash configuration field with Key 0 compared to 0x3_FF00, etc. If the backdoor keys match, security will be released. If the backdoor keys do not match, security is not released and all future attempts to execute the Verify Backdoor Access Key command are aborted (set ACCERR) until a reset occurs. The CCIF flag is set after the Verify Backdoor Access Key operation has completed.

Table 25-53. Verify Backdoor Access Key Command Error Handling

Register	Error Bit	Error Condition
FSTAT	ACCERR	Set if CCOBIX[2:0] != 100 at command launch
		Set if an incorrect backdoor key is supplied
		Set if backdoor key access has not been enabled (KEYEN[1:0] != 10, see Section 25.3.2.2)
		Set if the backdoor key has mismatched since the last reset
	FPVIOL	None
	MGSTAT1	None
	MGSTAT0	None

25.4.6.12 Set User Margin Level Command

The Set User Margin Level command causes the Memory Controller to set the margin level for future read operations of the P-Flash or EEPROM block.

Table 25-54. Set User Margin Level Command FCCOB Requirements

CCOBIX[2:0]	FCCOB Parameters	
000	0x0D	Flash block selection code [1:0]. See Table 25-34

Table 25-54. Set User Margin Level Command FCCOB Requirements

CCOBIX[2:0]	FCCOB Parameters
001	Margin level setting.

Upon clearing CCIF to launch the Set User Margin Level command, the Memory Controller will set the user margin level for the targeted block and then set the CCIF flag.

NOTE

When the EEPROM block is targeted, the EEPROM user margin levels are applied only to the EEPROM reads. However, when the P-Flash block is targeted, the P-Flash user margin levels are applied to both P-Flash and EEPROM reads. It is not possible to apply user margin levels to the P-Flash block only.

Valid margin level settings for the Set User Margin Level command are defined in Table 25-55.

Table 25-55. Valid Set User Margin Level Settings

CCOB (CCOBIX=001)	Level Description
0x0000	Return to Normal Level
0x0001	User Margin-1 Level[1]
0x0002	User Margin-0 Level[2]

1 Read margin to the erased state

2 Read margin to the programmed state

Table 25-56. Set User Margin Level Command Error Handling

Register	Error Bit	Error Condition
FSTAT	ACCERR	Set if CCOBIX[2:0] != 001 at command launch
		Set if command not available in current mode (see Table 25-27)
		Set if an invalid FlashBlockSelectionCode[1:0] is supplied (See Table 25-34)
		Set if an invalid margin level setting is supplied
	FPVIOL	None
	MGSTAT1	None
	MGSTAT0	None

NOTE

User margin levels can be used to check that Flash memory contents have adequate margin for normal level read operations. If unexpected results are encountered when checking Flash memory contents at user margin levels, a potential loss of information has been detected.

25.4.6.13 Set Field Margin Level Command

The Set Field Margin Level command, valid in special modes only, causes the Memory Controller to set the margin level specified for future read operations of the P-Flash or EEPROM block.

Upon clearing CCIF to launch the Set Field Margin Level command, the Memory Controller will set the

Table 25-57. Set Field Margin Level Command FCCOB Requirements

CCOBIX[2:0]	FCCOB Parameters	
000	0x0E	Flash block selection code [1:0]. See Table 25-34
001	Margin level setting.	

field margin level for the targeted block and then set the CCIF flag.

NOTE

When the EEPROM block is targeted, the EEPROM field margin levels are applied only to the EEPROM reads. However, when the P-Flash block is targeted, the P-Flash field margin levels are applied to both P-Flash and EEPROM reads. It is not possible to apply field margin levels to the P-Flash block only.

Valid margin level settings for the Set Field Margin Level command are defined in Table 25-58.

Table 25-58. Valid Set Field Margin Level Settings

CCOB (CCOBIX=001)	Level Description
0x0000	Return to Normal Level
0x0001	User Margin-1 Level[1]
0x0002	User Margin-0 Level[2]
0x0003	Field Margin-1 Level[1]
0x0004	Field Margin-0 Level[2]

[1] Read margin to the erased state

[2] Read margin to the programmed state

Table 25-59. Set Field Margin Level Command Error Handling

Register	Error Bit	Error Condition
FSTAT	ACCERR	Set if CCOBIX[2:0] != 001 at command launch
		Set if command not available in current mode (see Table 25-27)
		Set if an invalid FlashBlockSelectionCode[1:0] is supplied (See Table 25-34)
		Set if an invalid margin level setting is supplied
	FPVIOL	None
	MGSTAT1	None
	MGSTAT0	None

CAUTION

Field margin levels must only be used during verify of the initial factory programming.

NOTE

Field margin levels can be used to check that Flash memory contents have adequate margin for data retention at the normal level setting. If unexpected results are encountered when checking Flash memory contents at field margin levels, the Flash memory contents should be erased and reprogrammed.

25.4.6.14 Erase Verify EEPROM Section Command

The Erase Verify EEPROM Section command will verify that a section of code in the EEPROM is erased. The Erase Verify EEPROM Section command defines the starting point of the data to be verified and the number of words.

Table 25-60. Erase Verify EEPROM Section Command FCCOB Requirements

CCOBIX[2:0]	FCCOB Parameters	
000	0x10	Global address [17:16] to identify the EEPROM block
001	Global address [15:0] of the first word to be verified	
010	Number of words to be verified	

Upon clearing CCIF to launch the Erase Verify EEPROM Section command, the Memory Controller will verify the selected section of EEPROM memory is erased. The CCIF flag will set after the Erase Verify EEPROM Section operation has completed. If the section is not erased, it means blank check failed, both MGSTAT bits will be set.

Table 25-61. Erase Verify EEPROM Section Command Error Handling

Register	Error Bit	Error Condition
FSTAT	ACCERR	Set if CCOBIX[2:0] != 010 at command launch
		Set if command not available in current mode (see Table 25-27)
		Set if an invalid global address [17:0] is supplied
		Set if a misaligned word address is supplied (global address [0] != 0)
		Set if the requested section breaches the end of the EEPROM block
	FPVIOL	None
	MGSTAT1	Set if any errors have been encountered during the read or if blank check failed.
	MGSTAT0	Set if any non-correctable errors have been encountered during the read or if blank check failed.

25.4.6.15 Program EEPROM Command

The Program EEPROM operation programs one to four previously erased words in the EEPROM block. The Program EEPROM operation will confirm that the targeted location(s) were successfully programmed upon completion.

CAUTION

A Flash word must be in the erased state before being programmed. Cumulative programming of bits within a Flash word is not allowed.

Table 25-62. Program EEPROM Command FCCOB Requirements

CCOBIX[2:0]	FCCOB Parameters	
000	0x11	Global address [17:16] to identify the EEPROM block
001	Global address [15:0] of word to be programmed	
010	Word 0 program value	
011	Word 1 program value, if desired	
100	Word 2 program value, if desired	
101	Word 3 program value, if desired	

Upon clearing CCIF to launch the Program EEPROM command, the user-supplied words will be transferred to the Memory Controller and be programmed if the area is unprotected. The CCOBIX index value at Program EEPROM command launch determines how many words will be programmed in the EEPROM block. The CCIF flag is set when the operation has completed.

Table 25-63. Program EEPROM Command Error Handling

Register	Error Bit	Error Condition
FSTAT	ACCERR	Set if CCOBIX[2:0] < 010 at command launch
		Set if CCOBIX[2:0] > 101 at command launch
		Set if command not available in current mode (see Table 25-27)
		Set if an invalid global address [17:0] is supplied
		Set if a misaligned word address is supplied (global address [0] != 0)
		Set if the requested group of words breaches the end of the EEPROM block
	FPVIOL	Set if the selected area of the EEPROM memory is protected
	MGSTAT1	Set if any errors have been encountered during the verify operation
	MGSTAT0	Set if any non-correctable errors have been encountered during the verify operation

25.4.6.16 Erase EEPROM Sector Command

The Erase EEPROM Sector operation will erase all addresses in a sector of the EEPROM block.

Table 25-64. Erase EEPROM Sector Command FCCOB Requirements

CCOBIX[2:0]	FCCOB Parameters	
000	0x12	Global address [17:16] to identify EEPROM block
001	Global address [15:0] anywhere within the sector to be erased. See Section 25.1.2.2 for EEPROM sector size.	

Upon clearing CCIF to launch the Erase EEPROM Sector command, the Memory Controller will erase the selected Flash sector and verify that it is erased. The CCIF flag will set after the Erase EEPROM Sector operation has completed.

Table 25-65. Erase EEPROM Sector Command Error Handling

Register	Error Bit	Error Condition
FSTAT	ACCERR	Set if CCOBIX[2:0] != 001 at command launch
		Set if command not available in current mode (see Table 25-27)
		Set if an invalid global address [17:0] is suppliedsee Table 25-3)
		Set if a misaligned word address is supplied (global address [0] != 0)
	FPVIOL	Set if the selected area of the EEPROM memory is protected
	MGSTAT1	Set if any errors have been encountered during the verify operation
	MGSTAT0	Set if any non-correctable errors have been encountered during the verify operation

25.4.7 Interrupts

The Flash module can generate an interrupt when a Flash command operation has completed or when a Flash command operation has detected an ECC fault.

Table 25-66. Flash Interrupt Sources

Interrupt Source	Interrupt Flag	Local Enable	Global (CCR) Mask
Flash Command Complete	CCIF (FSTAT register)	CCIE (FCNFG register)	I Bit
ECC Double Bit Fault on Flash Read	DFDIF (FERSTAT register)	DFDIE (FERCNFG register)	I Bit
ECC Single Bit Fault on Flash Read	SFDIF (FERSTAT register)	SFDIE (FERCNFG register)	I Bit

NOTE

Vector addresses and their relative interrupt priority are determined at the MCU level.

25.4.7.1 Description of Flash Interrupt Operation

The Flash module uses the CCIF flag in combination with the CCIE interrupt enable bit to generate the Flash command interrupt request. The Flash module uses the DFDIF and SFDIF flags in combination with the DFDIE and SFDIE interrupt enable bits to generate the Flash error interrupt request. For a detailed description of the register bits involved, refer to Section 25.3.2.5, “Flash Configuration Register (FCNFG)”, Section 25.3.2.6, “Flash Error Configuration Register (FERCNFG)”, Section 25.3.2.7, “Flash Status Register (FSTAT)”, and Section 25.3.2.8, “Flash Error Status Register (FERSTAT)”.

The logic used for generating the Flash module interrupts is shown in Figure 25-27.

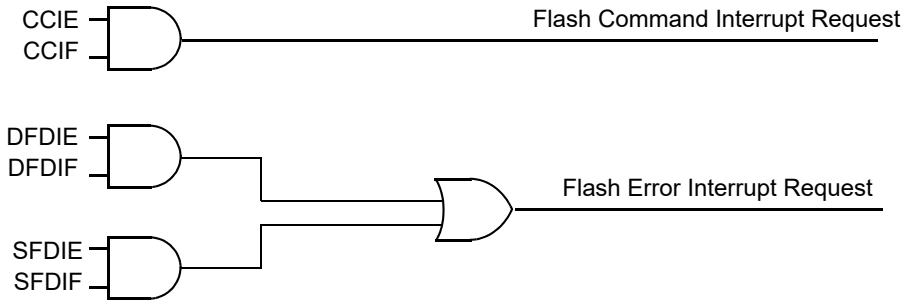

Figure 25-27. Flash Module Interrupts Implementation

25.4.8 Wait Mode

The Flash module is not affected if the MCU enters wait mode. The Flash module can recover the MCU from wait via the CCIF interrupt (see Section 25.4.7, “Interrupts”).

25.4.9 Stop Mode

If a Flash command is active (CCIF = 0) when the MCU requests stop mode, the current Flash operation will be completed before the MCU is allowed to enter stop mode.

25.5 Security

The Flash module provides security information to the MCU. The Flash security state is defined by the SEC bits of the FSEC register (see Table 25-11). During reset, the Flash module initializes the FSEC register using data read from the security byte of the Flash configuration field at global address 0x3_FF0F. The security state out of reset can be permanently changed by programming the security byte assuming that the MCU is starting from a mode where the necessary P-Flash erase and program commands are available and that the upper region of the P-Flash is unprotected. If the Flash security byte is successfully programmed, its new value will take affect after the next MCU reset.

The following subsections describe these security-related subjects:

- Unsecuring the MCU using Backdoor Key Access
- Unsecuring the MCU in Special Single Chip Mode using BDM
- Mode and Security Effects on Flash Command Availability

25.5.1 Unsecuring the MCU using Backdoor Key Access

The MCU may be unsecured by using the backdoor key access feature which requires knowledge of the contents of the backdoor keys (four 16-bit words programmed at addresses 0x3_FF00-0x3_FF07). If the KEYEN[1:0] bits are in the enabled state (see Section 25.3.2.2), the Verify Backdoor Access Key command (see Section 25.4.6.11) allows the user to present four prospective keys for comparison to the keys stored in the Flash memory via the Memory Controller. If the keys presented in the Verify Backdoor Access Key command match the backdoor keys stored in the Flash memory, the SEC bits in the FSEC register (see Table 25-11) will be changed to unsecure the MCU. Key values of 0x0000 and 0xFFFF are not permitted as backdoor keys. While the Verify Backdoor Access Key command is active, P-Flash memory and EEPROM memory will not be available for read access and will return invalid data.

The user code stored in the P-Flash memory must have a method of receiving the backdoor keys from an external stimulus. This external stimulus would typically be through one of the on-chip serial ports.

If the KEYEN[1:0] bits are in the enabled state (see Section 25.3.2.2), the MCU can be unsecured by the backdoor key access sequence described below:

1. Follow the command sequence for the Verify Backdoor Access Key command as explained in Section 25.4.6.11
2. If the Verify Backdoor Access Key command is successful, the MCU is unsecured and the SEC[1:0] bits in the FSEC register are forced to the unsecure state of 10

The Verify Backdoor Access Key command is monitored by the Memory Controller and an illegal key will prohibit future use of the Verify Backdoor Access Key command. A reset of the MCU is the only method to re-enable the Verify Backdoor Access Key command. The security as defined in the Flash security byte (0x3_FF0F) is not changed by using the Verify Backdoor Access Key command sequence. The backdoor keys stored in addresses 0x3_FF00-0x3_FF07 are unaffected by the Verify Backdoor Access Key command sequence. The Verify Backdoor Access Key command sequence has no effect on the program and erase protections defined in the Flash protection register, FPROT.

After the backdoor keys have been correctly matched, the MCU will be unsecured. After the MCU is unsecured, the sector containing the Flash security byte can be erased and the Flash security byte can be reprogrammed to the unsecure state, if desired. In the unsecure state, the user has full control of the contents of the backdoor keys by programming addresses 0x3_FF00-0x3_FF07 in the Flash configuration field.

25.5.2 Unsecuring the MCU in Special Single Chip Mode using BDM

A secured MCU can be unsecured in special single chip mode by using the following method to erase the P-Flash and EEPROM memory:

1. Reset the MCU into special single chip mode
2. Delay while the BDM executes the Erase Verify All Blocks command write sequence to check if the P-Flash and EEPROM memories are erased
3. Send BDM commands to disable protection in the P-Flash and EEPROM memory
4. Execute the Erase All Blocks command write sequence to erase the P-Flash and EEPROM memory. Alternatively the Unsecure Flash command can be executed, if so the steps 5 and 6 below are skeeped.
5. After the CCIF flag sets to indicate that the Erase All Blocks operation has completed, reset the MCU into special single chip mode
6. Delay while the BDM executes the Erase Verify All Blocks command write sequence to verify that the P-Flash and EEPROM memory are erased

If the P-Flash and EEPROM memory are verified as erased, the MCU will be unsecured. All BDM commands will now be enabled and the Flash security byte may be programmed to the unsecure state by continuing with the following steps:

7. Send BDM commands to execute the Program P-Flash command write sequence to program the Flash security byte to the unsecured state

8. Reset the MCU

25.5.3 Mode and Security Effects on Flash Command Availability

The availability of Flash module commands depends on the MCU operating mode and security state as shown in Table 25-27.

25.6 Initialization

On each system reset the flash module executes an initialization sequence which establishes initial values for the Flash Block Configuration Parameters, the FPROT and EEPROT protection registers, and the FOPT and FSEC registers. The initialization routine reverts to built-in default values that leave the module in a fully protected and secured state if errors are encountered during execution of the reset sequence. If a double bit fault is detected during the reset sequence, both MGSTAT bits in the FSTAT register will be set.

CCIF is cleared throughout the initialization sequence. The Flash module holds off all CPU access for a portion of the initialization sequence. Flash reads are allowed once the hold is removed. Completion of the initialization sequence is marked by setting CCIF high which enables user commands.

If a reset occurs while any Flash command is in progress, that command will be immediately aborted. The state of the word being programmed or the sector/block being erased is not guaranteed.

Chapter 26
48 KByte Flash Module (S12FTMRG48K1V1)

Table 26-1. Revision History

Revision Number	Revision Date	Sections Affected	Description of Changes
V01.04	17 Jun 2010	26.4.6.1/26-899 26.4.6.2/26-900 26.4.6.3/26-900 26.4.6.14/26-910	Clarify Erase Verify Commands Descriptions related to the bits MGSTAT[1:0] of the register FSTAT.
V01.05	20 Aug 2010	26.4.6.2/26-900 26.4.6.12/26-907 26.4.6.13/26-909	Updated description of the commands RD1BLK, MLOADU and MLOADF
V01.06	31 Jan 2011	26.3.2.9/26-882	Updated description of protection on Section 26.3.2.9

26.1 Introduction

The FTMRG48K1 module implements the following:

- 48Kbytes of P-Flash (Program Flash) memory
- 1,536bytes of EEPROM memory

The Flash memory is ideal for single-supply applications allowing for field reprogramming without requiring external high voltage sources for program or erase operations. The Flash module includes a memory controller that executes commands to modify Flash memory contents. The user interface to the memory controller consists of the indexed Flash Common Command Object (FCCOB) register which is written to with the command, global address, data, and any required command parameters. The memory controller must complete the execution of a command before the FCCOB register can be written to with a new command.

CAUTION

A Flash word or phrase must be in the erased state before being programmed. Cumulative programming of bits within a Flash word or phrase is not allowed.

The Flash memory may be read as bytes and aligned words. Read access time is one bus cycle for bytes and aligned words. For misaligned words access, the CPU has to perform twice the byte read access command. For Flash memory, an erased bit reads 1 and a programmed bit reads 0.

It is possible to read from P-Flash memory while some commands are executing on EEPROM memory. It is not possible to read from EEPROM memory while a command is executing on P-Flash memory. Simultaneous P-Flash and EEPROM operations are discussed in Section 26.4.5.

Both P-Flash and EEPROM memories are implemented with Error Correction Codes (ECC) that can resolve single bit faults and detect double bit faults. For P-Flash memory, the ECC implementation requires that programming be done on an aligned 8 byte basis (a Flash phrase). Since P-Flash memory is always read by half-phrase, only one single bit fault in an aligned 4 byte half-phrase containing the byte or word accessed will be corrected.

26.1.1 Glossary

Command Write Sequence — An MCU instruction sequence to execute built-in algorithms (including program and erase) on the Flash memory.

EEPROM Memory — The EEPROM memory constitutes the nonvolatile memory store for data.

EEPROM Sector — The EEPROM sector is the smallest portion of the EEPROM memory that can be erased. The EEPROM sector consists of 4 bytes.

NVM Command Mode — An NVM mode using the CPU to setup the FCCOB register to pass parameters required for Flash command execution.

Phrase — An aligned group of four 16-bit words within the P-Flash memory. Each phrase includes two sets of aligned double words with each set including 7 ECC bits for single bit fault correction and double bit fault detection within each double word.

P-Flash Memory — The P-Flash memory constitutes the main nonvolatile memory store for applications.

P-Flash Sector — The P-Flash sector is the smallest portion of the P-Flash memory that can be erased. Each P-Flash sector contains 512 bytes.

Program IFR — Nonvolatile information register located in the P-Flash block that contains the Version ID, and the Program Once field.

26.1.2 Features

26.1.2.1 P-Flash Features

- 48 Kbytes of P-Flash memory composed of one 48 Kbyte Flash block divided into 96 sectors of 512 bytes
- Single bit fault correction and double bit fault detection within a 32-bit double word during read operations
- Automated program and erase algorithm with verify and generation of ECC parity bits

- Fast sector erase and phrase program operation
- Ability to read the P-Flash memory while programming a word in the EEPROM memory
- Flexible protection scheme to prevent accidental program or erase of P-Flash memory

26.1.2.2 EEPROM Features

- 1.5Kbytes of EEPROM memory composed of one 1.5Kbyte Flash block divided into 384 sectors of 4 bytes
- Single bit fault correction and double bit fault detection within a word during read operations
- Automated program and erase algorithm with verify and generation of ECC parity bits
- Fast sector erase and word program operation
- Protection scheme to prevent accidental program or erase of EEPROM memory
- Ability to program up to four words in a burst sequence

26.1.2.3 Other Flash Module Features

- No external high-voltage power supply required for Flash memory program and erase operations
- Interrupt generation on Flash command completion and Flash error detection
- Security mechanism to prevent unauthorized access to the Flash memory

26.1.3 Block Diagram

The block diagram of the Flash module is shown in Figure 26-1.

Figure 26-1. FTMRG48K1 Block Diagram

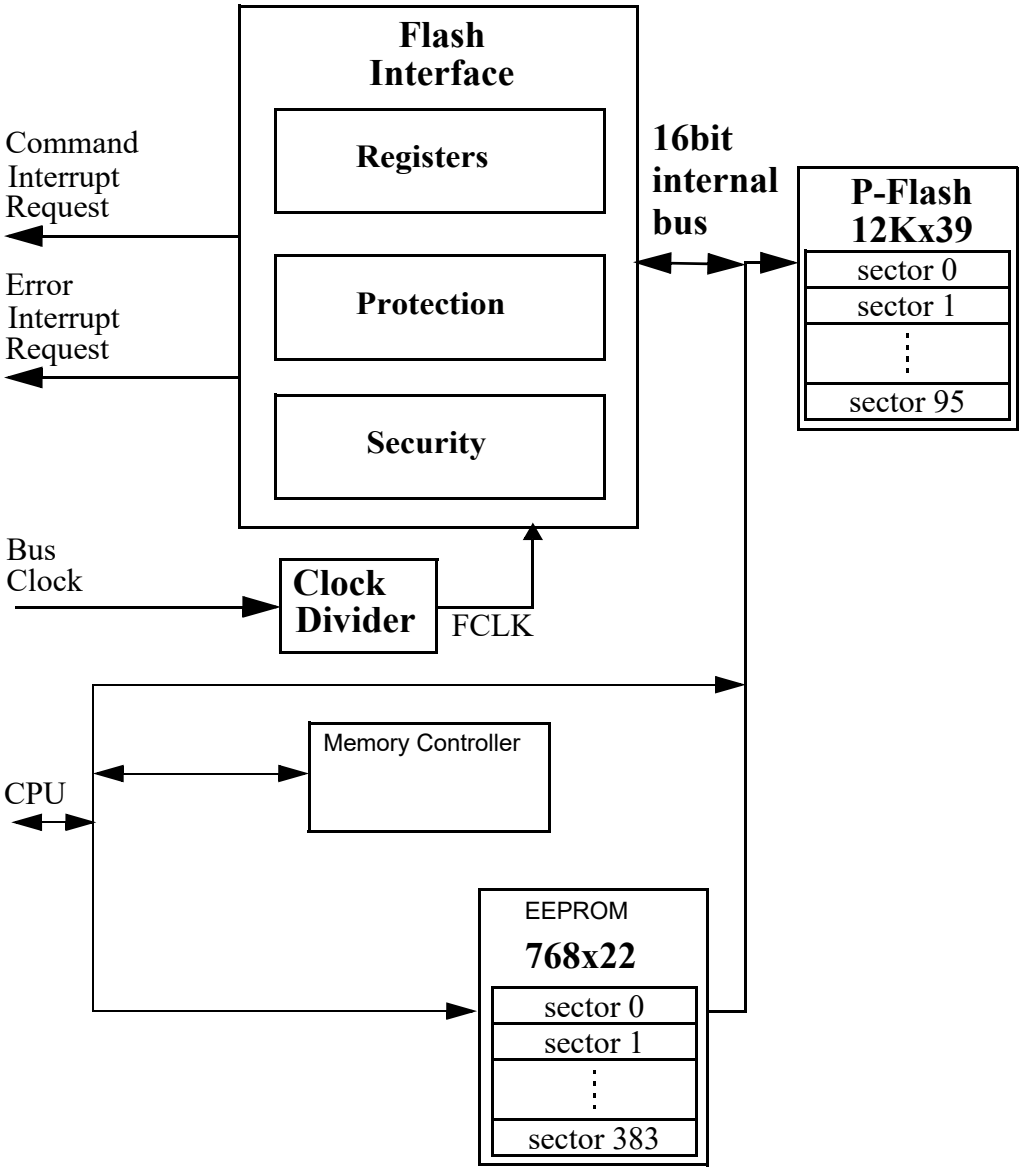

26.2 External Signal Description

The Flash module contains no signals that connect off-chip.

26.3 Memory Map and Registers

This section describes the memory map and registers for the Flash module. Read data from unimplemented memory space in the Flash module is undefined. Write access to unimplemented or reserved memory space in the Flash module will be ignored by the Flash module.

CAUTION

Writing to the Flash registers while a Flash command is executing (that is indicated when the value of flag CCIF reads as ’0’) is not allowed. If such action is attempted the write operation will not change the register value.

Writing to the Flash registers is allowed when the Flash is not busy executing commands (CCIF = 1) and during initialization right after reset, despite the value of flag CCIF in that case (refer to Section 26.6 for a complete description of the reset sequence).

.

Table 26-2. FTMRG Memory Map

Global Address (in Bytes)	Size (Bytes)	Description
0x0_0000 - 0x0_03FF	1,024	Register Space
0x0_0400 – 0x0_09FF	1,536	EEPROM Memory
0x0_0A00 – 0x0_0BFF	512	FTMRG reserved area
0x0_4000 – 0x0_7FFF	16,284	NVMRES[1]=1 : NVM Resource area (see Figure 26-3)
0x3_0000 – 0x3_3FFF	16,384	FTMRG reserved area
0x3_4000 – 0x3_FFFF	49,152	P-Flash Memory

[1] See NVMRES description in Section 26.4.3

26.3.1 Module Memory Map

The S12 architecture places the P-Flash memory between global addresses 0x3_4000 and 0x3_FFFF as shown in Table 26-3 .The P-Flash memory map is shown in Figure 26-2.

Table 26-3. P-Flash Memory Addressing

Global Address	Size (Bytes)	Description
0x3_4000 – 0x3_FFFF	48 K	P-Flash Block Contains Flash Configuration Field (see Table 26-4).

The FPROT register, described in Section 26.3.2.9, can be set to protect regions in the Flash memory from accidental program or erase. The Flash memory addresses covered by these protectable regions are shown in the P-Flash memory map. The higher address region is mainly targeted to hold the boot loader code since it covers the vector space. Default protection settings as well as security information that allows the MCU to restrict access to the Flash module are stored in the Flash configuration field as described in Table 26-4.

Table 26-4. Flash Configuration Field

Global Address	Size (Bytes)	Description
0x3_FF00-0x3_FF07	8	Backdoor Comparison Key Refer to Section 26.4.6.11, “Verify Backdoor Access Key Command,” and Section 26.5.1, “Unsecuring the MCU using Backdoor Key Access”
0x3_FF08-0x3_FF0B[1]	4	Reserved
0x3_FF0C[1]	1	P-Flash Protection byte. Refer to Section 26.3.2.9, “P-Flash Protection Register (FPROT)”
0x3_FF0D[1]	1	EEPROM Protection byte. Refer to Section 26.3.2.10, “EEPROM Protection Register (EEPROT)”
0x3_FF0E[1]	1	Flash Nonvolatile byte Refer to Section 26.3.2.16, “Flash Option Register (FOPT)”
0x3_FF0F[1]	1	Flash Security byte Refer to Section 26.3.2.2, “Flash Security Register (FSEC)”

1 0x3FF08-0x3_FF0F form a Flash phrase and must be programmed in a single command write sequence. Each byte in the 0x3_FF08 - 0x3_FF0B reserved field should be programmed to 0xFF.

Figure 26-2. P-Flash Memory Map

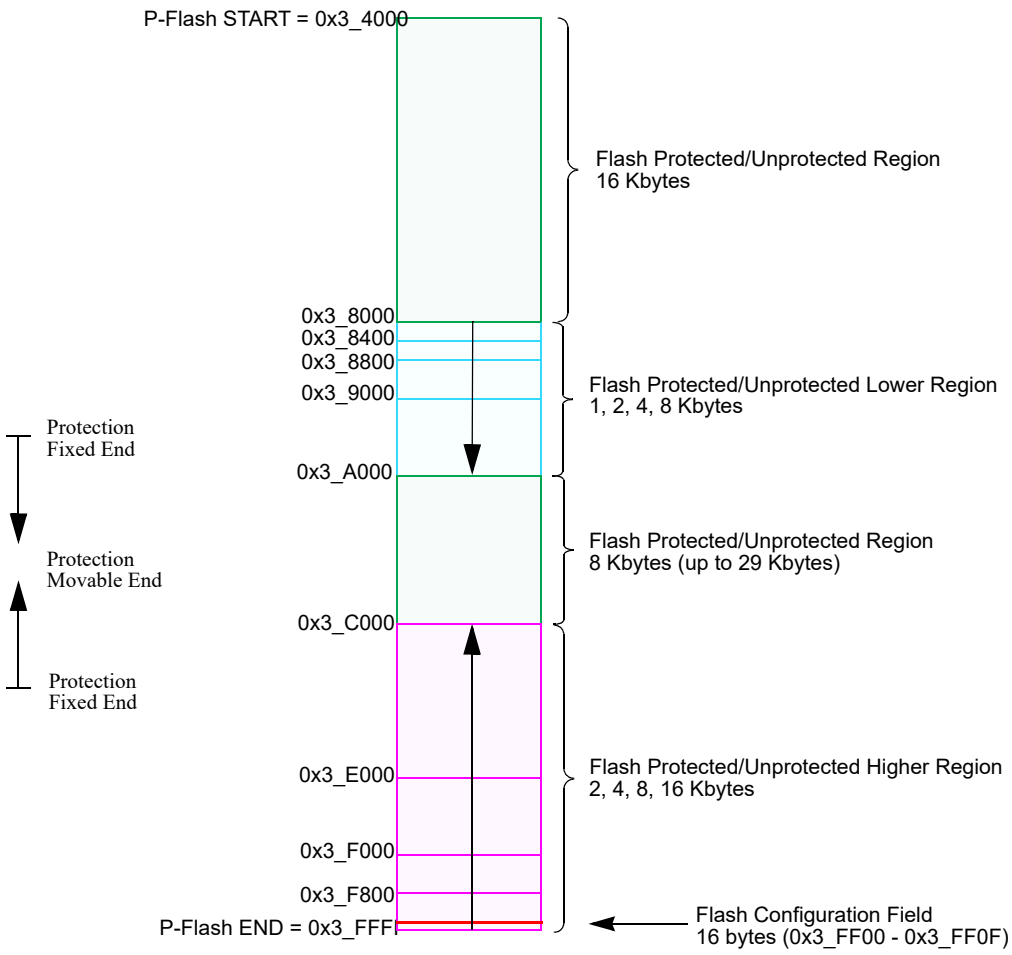

Table 26-5. Program IFR Fields

Global Address	Size (Bytes)	Field Description
0x0_4000 – 0x0_4007	8	Reserved
0x0_4008 – 0x0_40B5	174	Reserved
0x0_40B6 – 0x0_40B7	2	Version ID[1]
0x0_40B8 – 0x0_40BF	8	Reserved
0x0_40C0 – 0x0_40FF	64	Program Once Field Refer to Section 26.4.6.6, “Program Once Command”

[1] Used to track firmware patch versions, see Section 26.4.2

Table 26-6. Memory Controller Resource Fields (NVMRES[1]=1)

Global Address	Size (Bytes)	Description
0x0_4000 – 0x040FF	256	P-Flash IFR (see Table 26-5)
0x0_4100 – 0x0_41FF	256	Reserved.
0x0_4200 – 0x0_57FF		Reserved
0x0_5800 – 0x0_59FF	512	Reserved
0x0_5A00 – 0x0_5FFF	1,536	Reserved
0x0_6000 – 0x0_6BFF	3,072	Reserved
0x0_6C00 – 0x0_7FFF	5,120	Reserved

1 NVMRES - See Section 26.4.3 for NVMRES (NVM Resource) detail.

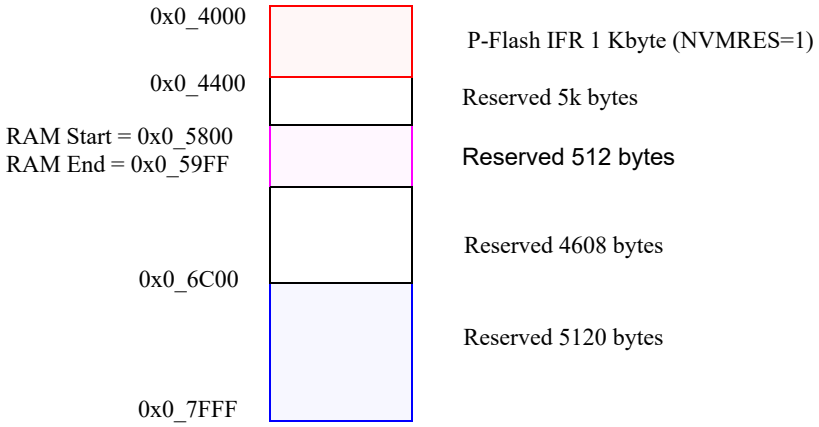

Figure 26-3. Memory Controller Resource Memory Map (NVMRES=1)

26.3.2 Register Descriptions

The Flash module contains a set of 20 control and status registers located between Flash module base + 0x0000 and 0x0013.

In the case of the writable registers, the write accesses are forbidden during Fash command execution (for more detail, see Caution note in Section 26.3).

A summary of the Flash module registers is given in Figure 26-4 with detailed descriptions in the following subsections.

Address & Name		7	6	5	4	3	2	1	0
0x0000 FCLKDIV	R	FDIVLD	FDIVLCK	FDIV5	FDIV4	FDIV3	FDIV2	FDIV1	FDIV0
	W								
0x0001 FSEC	R	KEYEN1	KEYEN0	RNV5	RNV4	RNV3	RNV2	SEC1	SEC0
	W								
0x0002 FCCOBIX	R	0	0	0	0	0	CCOBIX2	CCOBIX1	CCOBIX0
	W								
0x0003 FRSV0	R	0	0	0	0	0	0	0	0
	W								
0x0004 FCNFG	R	CCIE	0	0	IGNSF	0	0	FDFD	FSFD
	W								
0x0005 FERCNFG	R	0	0	0	0	0	0	DFDIE	SFDIE
	W								
0x0006 FSTAT	R	CCIF	0	ACCERR	FPVIOL	MGBUSY	RSVD	MGSTAT1	MGSTAT0
	W								
0x0007 FERSTAT	R	0	0	0	0	0	0	DFDIF	SFDIF
	W								
0x0008 FPROT	R	FPOPEN	RNV6	FPHDIS	FPHS1	FPHS0	FPLDIS	FPLS1	FPLS0
	W								
0x0009 EEPROT	R	DPOPEN	0	DPS5	DPS4	DPS3	DPS2	DPS1	DPS0
	W								
0x000A FCCOBHI	R	CCOB15	CCOB14	CCOB13	CCOB12	CCOB11	CCOB10	CCOB9	CCOB8
	W								
0x000B FCCOBLO	R	CCOB7	CCOB6	CCOB5	CCOB4	CCOB3	CCOB2	CCOB1	CCOB0
	W								
0x000C FRSV1	R	0	0	0	0	0	0	0	0
	W								

Figure 26-4. FTMRG48K1 Register Summary

Address & Name		7	6	5	4	3	2	1	0
0x000D FRSV2	R	0	0	0	0	0	0	0	0
	W								
0x000E FRSV3	R	0	0	0	0	0	0	0	0
	W								
0x000F FRSV4	R	0	0	0	0	0	0	0	0
	W								
0x0010 FOPT	R	NV7	NV6	NV5	NV4	NV3	NV2	NV1	NV0
	W								
0x0011 FRSV5	R	0	0	0	0	0	0	0	0
	W								
0x0012 FRSV6	R	0	0	0	0	0	0	0	0
	W								
0x0013 FRSV7	R	0	0	0	0	0	0	0	0
	W								

= Unimplemented or Reserved

Figure 26-4. FTMRG48K1 Register Summary (continued)

26.3.2.1 Flash Clock Divider Register (FCLKDIV)

The FCLKDIV register is used to control timed events in program and erase algorithms.

Offset Module Base + 0x0000

	7	6	5	4	3	2	1	0
R	FDIVLD	FDIVLCK	FDIV[5:0]					
W								
Reset	0	0	0	0	0	0	0	0

= Unimplemented or Reserved

Figure 26-5. Flash Clock Divider Register (FCLKDIV)

All bits in the FCLKDIV register are readable, bit 7 is not writable, bit 6 is write-once-hi and controls the writability of the FDIV field in normal mode. In special mode, bits 6-0 are writable any number of times but bit 7 remains unwritable.

CAUTION

The FCLKDIV register should never be written while a Flash command is executing (CCIF=0).

Table 26-7. FCLKDIV Field Descriptions

Field	Description
7 FDIVLD	Clock Divider Loaded 0 FCLKDIV register has not been written since the last reset 1 FCLKDIV register has been written since the last reset
6 FDIVLCK	Clock Divider Locked 0 FDIV field is open for writing 1 FDIV value is locked and cannot be changed. Once the lock bit is set high, only reset can clear this bit and restore writability to the FDIV field in normal mode.
5–0 FDIV[5:0]	**Clock Divider Bits** — FDIV[5:0] must be set to effectively divide BUSCLK down to 1 MHz to control timed events during Flash program and erase algorithms. Table 26-8 shows recommended values for FDIV[5:0] based on the BUSCLK frequency. Please refer to Section 26.4.4, “Flash Command Operations,” for more information.

Table 26-8. FDIV values for various BUSCLK Frequencies

BUSCLK Frequency (MHz)		FDIV[5:0]	BUSCLK Frequency (MHz)		FDIV[5:0]
MIN[1]	MAX[2]		MIN[1]	MAX[2]	
1.0	1.6	0x00	16.6	17.6	0x10
1.6	2.6	0x01	17.6	18.6	0x11
2.6	3.6	0x02	18.6	19.6	0x12
3.6	4.6	0x03	19.6	20.6	0x13
4.6	5.6	0x04	20.6	21.6	0x14
5.6	6.6	0x05	21.6	22.6	0x15
6.6	7.6	0x06	22.6	23.6	0x16
7.6	8.6	0x07	23.6	24.6	0x17
8.6	9.6	0x08	24.6	25.6	0x18
9.6	10.6	0x09			
10.6	11.6	0x0A			
11.6	12.6	0x0B			
12.6	13.6	0x0C			
13.6	14.6	0x0D			
14.6	15.6	0x0E			
15.6	16.6	0x0F			

1 BUSCLK is Greater Than this value.

2 BUSCLK is Less Than or Equal to this value.

26.3.2.2 Flash Security Register (FSEC)

The FSEC register holds all bits associated with the security of the MCU and Flash module.

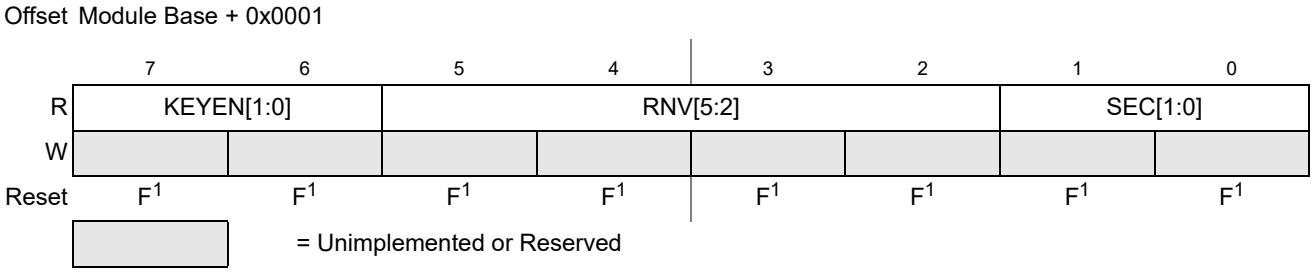

Figure 26-6. Flash Security Register (FSEC)

1 Loaded from IFR Flash configuration field, during reset sequence.

All bits in the FSEC register are readable but not writable.

During the reset sequence, the FSEC register is loaded with the contents of the Flash security byte in the Flash configuration field at global address 0x3_FF0F located in P-Flash memory (see Table 26-4) as indicated by reset condition F in Figure 26-6. If a double bit fault is detected while reading the P-Flash phrase containing the Flash security byte during the reset sequence, all bits in the FSEC register will be set to leave the Flash module in a secured state with backdoor key access disabled.

Table 26-9. FSEC Field Descriptions

Field	Description
7–6 KEYEN[1:0]	**Backdoor Key Security Enable Bits** — The KEYEN[1:0] bits define the enabling of backdoor key access to the Flash module as shown in Table 26-10.
5–2 RNV[5:2]	**Reserved Nonvolatile Bits** — The RNV bits should remain in the erased state for future enhancements.
1–0 SEC[1:0]	**Flash Security Bits** — The SEC[1:0] bits define the security state of the MCU as shown in Table 26-11. If the Flash module is unsecured using backdoor key access, the SEC bits are forced to 10.

Table 26-10. Flash KEYEN States

KEYEN[1:0]	Status of Backdoor Key Access
00	DISABLED
01	DISABLED[1]
10	ENABLED
11	DISABLED

1 Preferred KEYEN state to disable backdoor key access.

Table 26-11. Flash Security States

SEC[1:0]	Status of Security
00	SECURED
01	SECURED[1]
10	UNSECURED
11	SECURED

1 Preferred SEC state to set MCU to secured state.

The security function in the Flash module is described in Section 26.5.

26.3.2.3 Flash CCOB Index Register (FCCOBIX)

The FCCOBIX register is used to index the FCCOB register for Flash memory operations.

Offset Module Base + 0x0002

	7	6	5	4	3	2	1	0
R	0	0	0	0	0	CCOBIX[2:0]		
W								
Reset	0	0	0	0	0	0	0	0

= Unimplemented or Reserved

Figure 26-7. FCCOB Index Register (FCCOBIX)

CCOBIX bits are readable and writable while remaining bits read 0 and are not writable.

Table 26-12. FCCOBIX Field Descriptions

Field	Description
2–0 CCOBIX[1:0]	**Common Command Register Index**— The CCOBIX bits are used to select which word of the FCCOB register array is being read or written to. See 26.3.2.11 Flash Common Command Object Register (FCCOB),” for more details.

26.3.2.4 Flash Reserved0 Register (FRSV0)

This Flash register is reserved for factory testing.

Offset Module Base + 0x000C

	7	6	5	4	3	2	1	0
R	0	0	0	0	0	0	0	0
W								
Reset	0	0	0	0	0	0	0	0

= Unimplemented or Reserved

Figure 26-8. Flash Reserved0 Register (FRSV0)

All bits in the FRSV0 register read 0 and are not writable.

26.3.2.5 Flash Configuration Register (FCNFG)

The FCNFG register enables the Flash command complete interrupt and forces ECC faults on Flash array read access from the CPU.

Offset Module Base + 0x0004

	7	6	5	4	3	2	1	0
R	CCIE	0	0	IGNSF	0	0	FDFD	FSFD
W								
Reset	0	0	0	0	0	0	0	0

= Unimplemented or Reserved

Figure 26-9. Flash Configuration Register (FCNFG)

CCIE, IGNSF, FDFD, and FSFD bits are readable and writable while remaining bits read 0 and are not writable.

Table 26-13. FCNFG Field Descriptions

Field	Description
7 CCIE	**Command Complete Interrupt Enable** — The CCIE bit controls interrupt generation when a Flash command has completed. 0 Command complete interrupt disabled 1 An interrupt will be requested whenever the CCIF flag in the FSTAT register is set (see Section 26.3.2.7)
4 IGNSF	**Ignore Single Bit Fault** — The IGNSF controls single bit fault reporting in the FERSTAT register (see Section 26.3.2.8). 0 All single bit faults detected during array reads are reported 1 Single bit faults detected during array reads are not reported and the single bit fault interrupt will not be generated
1 FDFD	**Force Double Bit Fault Detect** — The FDFD bit allows the user to simulate a double bit fault during Flash array read operations and check the associated interrupt routine. The FDFD bit is cleared by writing a 0 to FDFD. 0 Flash array read operations will set the DFDIF flag in the FERSTAT register only if a double bit fault is detected 1 Any Flash array read operation will force the DFDIF flag in the FERSTAT register to be set (see Section 26.3.2.7) and an interrupt will be generated as long as the DFDIE interrupt enable in the FERCNFG register is set (see Section 26.3.2.6)
0 FSFD	**Force Single Bit Fault Detect** — The FSFD bit allows the user to simulate a single bit fault during Flash array read operations and check the associated interrupt routine. The FSFD bit is cleared by writing a 0 to FSFD. 0 Flash array read operations will set the SFDIF flag in the FERSTAT register only if a single bit fault is detected 1 Flash array read operation will force the SFDIF flag in the FERSTAT register to be set (see Section 26.3.2.7) and an interrupt will be generated as long as the SFDIE interrupt enable in the FERCNFG register is set (see Section 26.3.2.6)

26.3.2.6 Flash Error Configuration Register (FERCNFG)

The FERCNFG register enables the Flash error interrupts for the FERSTAT flags.

Offset Module Base + 0x0005

	7	6	5	4	3	2	1	0
R	0	0	0	0	0	0	DFDIE	SFDIE
W								
Reset	0	0	0	0	0	0	0	0

= Unimplemented or Reserved

Figure 26-10. Flash Error Configuration Register (FERCNFG)

All assigned bits in the FERCNFG register are readable and writable.

Table 26-14. FERCNFG Field Descriptions

Field	Description
1 DFDIE	**Double Bit Fault Detect Interrupt Enable** — The DFDIE bit controls interrupt generation when a double bit fault is detected during a Flash block read operation. 0 DFDIF interrupt disabled 1 An interrupt will be requested whenever the DFDIF flag is set (see Section 26.3.2.8)
0 SFDIE	**Single Bit Fault Detect Interrupt Enable** — The SFDIE bit controls interrupt generation when a single bit fault is detected during a Flash block read operation. 0 SFDIF interrupt disabled whenever the SFDIF flag is set (see Section 26.3.2.8) 1 An interrupt will be requested whenever the SFDIF flag is set (see Section 26.3.2.8)

26.3.2.7 Flash Status Register (FSTAT)

The FSTAT register reports the operational status of the Flash module.

Offset Module Base + 0x0006

	7	6	5	4	3	2	1	0
R	CCIF	0	ACCERR	FPVIOL	MGBUSY	RSVD	MGSTAT[1:0]	
W								
Reset	1	0	0	0	0	0	0[1]	0[1]

= Unimplemented or Reserved

Figure 26-11. Flash Status Register (FSTAT)

[1] Reset value can deviate from the value shown if a double bit fault is detected during the reset sequence (see Section 26.6).

CCIF, ACCERR, and FPVIOL bits are readable and writable, MGBUSY and MGSTAT bits are readable but not writable, while remaining bits read 0 and are not writable.

Table 26-15. FSTAT Field Descriptions

Field	Description
7 CCIF	**Command Complete Interrupt Flag** — The CCIF flag indicates that a Flash command has completed. The CCIF flag is cleared by writing a 1 to CCIF to launch a command and CCIF will stay low until command completion or command violation. 0 Flash command in progress 1 Flash command has completed
5 ACCERR	**Flash Access Error Flag** — The ACCERR bit indicates an illegal access has occurred to the Flash memory caused by either a violation of the command write sequence (see Section 26.4.4.2) or issuing an illegal Flash command. While ACCERR is set, the CCIF flag cannot be cleared to launch a command. The ACCERR bit is cleared by writing a 1 to ACCERR. Writing a 0 to the ACCERR bit has no effect on ACCERR. 0 No access error detected 1 Access error detected
4 FPVIOL	**Flash Protection Violation Flag** —The FPVIOL bit indicates an attempt was made to program or erase an address in a protected area of P-Flash or EEPROM memory during a command write sequence. The FPVIOL bit is cleared by writing a 1 to FPVIOL. Writing a 0 to the FPVIOL bit has no effect on FPVIOL. While FPVIOL is set, it is not possible to launch a command or start a command write sequence. 0 No protection violation detected 1 Protection violation detected
3 MGBUSY	**Memory Controller Busy Flag** — The MGBUSY flag reflects the active state of the Memory Controller. 0 Memory Controller is idle 1 Memory Controller is busy executing a Flash command (CCIF = 0)
2 RSVD	**Reserved Bit** — This bit is reserved and always reads 0.
1–0 MGSTAT[1:0]	**Memory Controller Command Completion Status Flag** — One or more MGSTAT flag bits are set if an error is detected during execution of a Flash command or during the Flash reset sequence. See Section 26.4.6, “Flash Command Description,” and Section 26.6, “Initialization” for details.

26.3.2.8 Flash Error Status Register (FERSTAT)

The FERSTAT register reflects the error status of internal Flash operations.

Offset Module Base + 0x0007

	7	6	5	4	3	2	1	0
R	0	0	0	0	0	0	DFDIF	SFDIF
W								
Reset	0	0	0	0	0	0	0	0

= Unimplemented or Reserved

Figure 26-12. Flash Error Status Register (FERSTAT)

All flags in the FERSTAT register are readable and only writable to clear the flag.

Table 26-16. FERSTAT Field Descriptions

Field	Description
1 DFDIF	**Double Bit Fault Detect Interrupt Flag** — The setting of the DFDIF flag indicates that a double bit fault was detected in the stored parity and data bits during a Flash array read operation or that a Flash array read operation returning invalid data was attempted on a Flash block that was under a Flash command operation.[1] The DFDIF flag is cleared by writing a 1 to DFDIF. Writing a 0 to DFDIF has no effect on DFDIF.[2] 0 No double bit fault detected 1 Double bit fault detected or a Flash array read operation returning invalid data was attempted while command running
0 SFDIF	**Single Bit Fault Detect Interrupt Flag** — With the IGNSF bit in the FCNFG register clear, the SFDIF flag indicates that a single bit fault was detected in the stored parity and data bits during a Flash array read operation or that a Flash array read operation returning invalid data was attempted on a Flash block that was under a Flash command operation.[1] The SFDIF flag is cleared by writing a 1 to SFDIF. Writing a 0 to SFDIF has no effect on SFDIF. 0 No single bit fault detected 1 Single bit fault detected and corrected or a Flash array read operation returning invalid data was attempted while command running

1 The single bit fault and double bit fault flags are mutually exclusive for parity errors (an ECC fault occurrence can be either single fault or double fault but never both). A simultaneous access collision (Flash array read operation returning invalid data attempted while command running) is indicated when both SFDIF and DFDIF flags are high.

2 There is a one cycle delay in storing the ECC DFDIF and SFDIF fault flags in this register. At least one NOP is required after a flash memory read before checking FERSTAT for the occurrence of ECC errors.

26.3.2.9 P-Flash Protection Register (FPROT)

The FPROT register defines which P-Flash sectors are protected against program and erase operations.

Offset Module Base + 0x0008

	7	6	5	4	3	2	1	0
R	FPOPEN	RNV6	FPHDIS	FPHS[1:0]		FPLDIS	FPLS[1:0]	
W								
Reset	F[1]	F[1]	F[1]	F[1]	F[1]	F[1]	F[1]	F[1]

= Unimplemented or Reserved

Figure 26-13. Flash Protection Register (FPROT)

1 Loaded from IFR Flash configuration field, during reset sequence.

The (unreserved) bits of the FPROT register are writable with the restriction that the size of the protected region can only be increased (see Section 26.3.2.9.1, “P-Flash Protection Restrictions,” and Table 26-21).

During the reset sequence, the FPROT register is loaded with the contents of the P-Flash protection byte in the Flash configuration field at global address 0x3_FF0C located in P-Flash memory (see Table 26-4) as indicated by reset condition ‘F’ in Figure 26-13. To change the P-Flash protection that will be loaded during the reset sequence, the upper sector of the P-Flash memory must be unprotected, then the P-Flash protection byte must be reprogrammed. If a double bit fault is detected while reading the P-Flash phrase containing the P-Flash protection byte during the reset sequence, the FPOPEN bit will be cleared and remaining bits in the FPROT register will be set to leave the P-Flash memory fully protected.

Trying to alter data in any protected area in the P-Flash memory will result in a protection violation error and the FPVIOL bit will be set in the FSTAT register. The block erase of a P-Flash block is not possible if any of the P-Flash sectors contained in the same P-Flash block are protected.

Table 26-17. FPROT Field Descriptions

Field	Description
7 FPOPEN	**Flash Protection Operation Enable** — The FPOPEN bit determines the protection function for program or erase operations as shown in Table 26-18 for the P-Flash block. 0 When FPOPEN is clear, the FPHDIS and FPLDIS bits define unprotected address ranges as specified by the corresponding FPHS and FPLS bits 1 When FPOPEN is set, the FPHDIS and FPLDIS bits enable protection for the address range specified by the corresponding FPHS and FPLS bits
6 RNV[6]	**Reserved Nonvolatile Bit** — The RNV bit should remain in the erased state for future enhancements.
5 FPHDIS	**Flash Protection Higher Address Range Disable** — The FPHDIS bit determines whether there is a protected/unprotected area in a specific region of the P-Flash memory ending with global address 0x3_FFFF. 0 Protection/Unprotection enabled 1 Protection/Unprotection disabled
4–3 FPHS[1:0]	**Flash Protection Higher Address Size** — The FPHS bits determine the size of the protected/unprotected area in P-Flash memory as shown inTable 26-19. The FPHS bits can only be written to while the FPHDIS bit is set.
2 FPLDIS	**Flash Protection Lower Address Range Disable** — The FPLDIS bit determines whether there is a protected/unprotected area in a specific region of the P-Flash memory beginning with global address 0x3_8000. 0 Protection/Unprotection enabled 1 Protection/Unprotection disabled
1–0 FPLS[1:0]	**Flash Protection Lower Address Size** — The FPLS bits determine the size of the protected/unprotected area in P-Flash memory as shown in Table 26-20. The FPLS bits can only be written to while the FPLDIS bit is set.

Table 26-18. P-Flash Protection Function

FPOPEN	FPHDIS	FPLDIS	Function[1]
1	1	1	No P-Flash Protection
1	1	0	Protected Low Range
1	0	1	Protected High Range
1	0	0	Protected High and Low Ranges
0	1	1	Full P-Flash Memory Protected
0	1	0	Unprotected Low Range
0	0	1	Unprotected High Range
0	0	0	Unprotected High and Low Ranges

[1] For range sizes, refer to Table 26-19 and Table 26-20.

Table 26-19. P-Flash Protection Higher Address Range

FPHS[1:0]	Global Address Range	Protected Size
00	0x3_F800–0x3_FFFF	2 Kbytes
01	0x3_F000–0x3_FFFF	4 Kbytes
10	0x3_E000–0x3_FFFF	8 Kbytes
11	0x3_C000–0x3_FFFF	16 Kbytes

Table 26-20. P-Flash Protection Lower Address Range

FPLS[1:0]	Global Address Range	Protected Size
00	0x3_8000–0x3_83FF	1 Kbyte
01	0x3_8000–0x3_87FF	2 Kbytes
10	0x3_8000–0x3_8FFF	4 Kbytes
11	0x3_8000–0x3_9FFF	8 Kbytes

All possible P-Flash protection scenarios are shown in Figure 26-14 . Although the protection scheme is loaded from the Flash memory at global address 0x3_FF0C during the reset sequence, it can be changed by the user. The P-Flash protection scheme can be used by applications requiring reprogramming in single chip mode while providing as much protection as possible if reprogramming is not required.

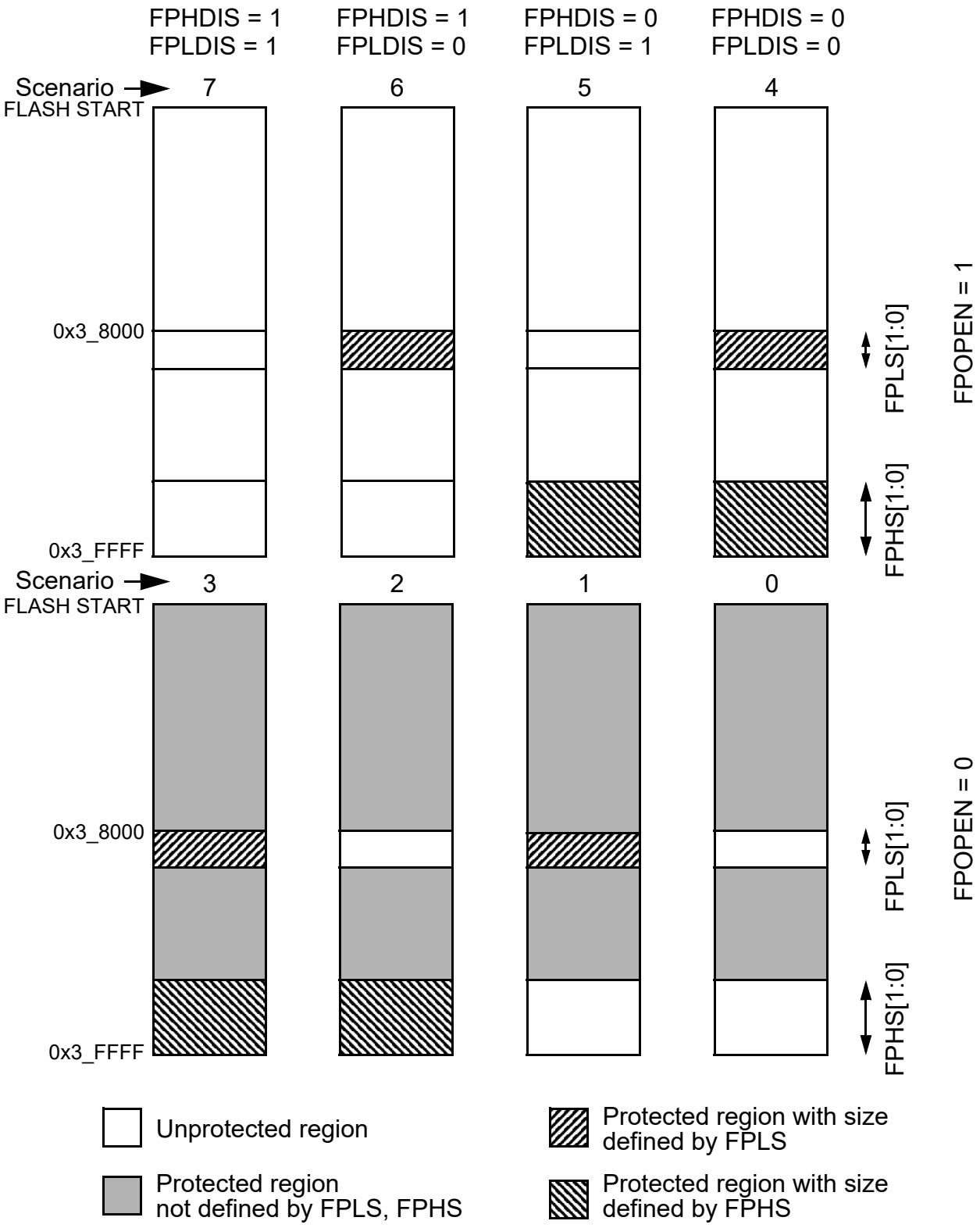

Figure 26-14. P-Flash Protection Scenarios

26.3.2.9.1 P-Flash Protection Restrictions

The general guideline is that P-Flash protection can only be added and not removed. Table 26-21 specifies all valid transitions between P-Flash protection scenarios. Any attempt to write an invalid scenario to the FPROT register will be ignored. The contents of the FPROT register reflect the active protection scenario. See the FPHS and FPLS bit descriptions for additional restrictions.

Table 26-21. P-Flash Protection Scenario Transitions

From Protection Scenario	To Protection Scenario[1]							
	0	1	2	3	4	5	6	7
0	X	X	X	X				
1		X		X				
2			X	X				
3				X				
4				X	X			
5			X	X	X	X		
6		X		X	X		X	
7	X	X	X	X	X	X	X	X

1 Allowed transitions marked with X, see Figure 26-14 for a definition of the scenarios.

26.3.2.10 EEPROM Protection Register (EEPROT)

The EEPROT register defines which EEPROM sectors are protected against program and erase operations.

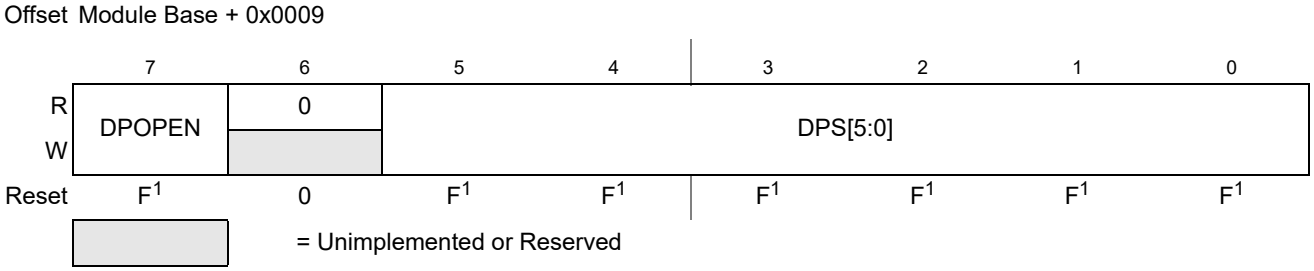

Figure 26-15. EEPROM Protection Register (EEPROT)

1 Loaded from IFR Flash configuration field, during reset sequence.

The (unreserved) bits of the EEPROT register are writable with the restriction that protection can be added but not removed. Writes must increase the DPS value and the DPOPEN bit can only be written from 1 (protection disabled) to 0 (protection enabled). If the DPOPEN bit is set, the state of the DPS bits is irrelevant.

During the reset sequence, fields DPOPEN and DPS of the EEPROT register are loaded with the contents of the EEPROM protection byte in the Flash configuration field at global address 0x3_FF0D located in P-Flash memory (see Table 26-4) as indicated by reset condition F in Table 26-23. To change the EEPROM protection that will be loaded during the reset sequence, the P-Flash sector containing the EEPROM protection byte must be unprotected, then the EEPROM protection byte must be programmed. If a double bit fault is detected while reading the P-Flash phrase containing the EEPROM protection byte during the reset sequence, the DPOPEN bit will be cleared and DPS bits will be set to leave the EEPROM memory fully protected.

Trying to alter data in any protected area in the EEPROM memory will result in a protection violation error and the FPVIOL bit will be set in the FSTAT register. Block erase of the EEPROM memory is not possible if any of the EEPROM sectors are protected.

Table 26-22. EEPROT Field Descriptions

Field	Description
7 DPOPEN	EEPROM Protection Control 0 Enables EEPROM memory protection from program and erase with protected address range defined by DPS bits 1 Disables EEPROM memory protection from program and erase
5–0 DPS[5:0]	**EEPROM Protection Size** — The DPS[5:0] bits determine the size of the protected area in the EEPROM memory as shown in Table 26-23 .

Table 26-23. EEPROM Protection Address Range

DPS[5:0]	Global Address Range	Protected Size
000000	0x0_0400 – 0x0_041F	32 bytes
000001	0x0_0400 – 0x0_043F	64 bytes
000010	0x0_0400 – 0x0_045F	96 bytes
000011	0x0_0400 – 0x0_047F	128 bytes
000100	0x0_0400 – 0x0_049F	160 bytes
000101	0x0_0400 – 0x0_04BF	192 bytes
The Protection Size goes on enlarging in step of 32 bytes, for each DPS value increasing of one. . . .		
101111 - to - 111111	0x0_0400 – 0x0_09FF	1,536 bytes

26.3.2.11 Flash Common Command Object Register (FCCOB)

The FCCOB is an array of six words addressed via the CCOBIX index found in the FCCOBIX register. Byte wide reads and writes are allowed to the FCCOB register.

Offset Module Base + 0x000A

	7	6	5	4	3	2	1	0
R W	CCOB[15:8]							
Reset	0	0	0	0	0	0	0	0

Figure 26-16. Flash Common Command Object High Register (FCCOBHI)

Offset Module Base + 0x000B

	7	6	5	4	3	2	1	0
R W	CCOB[7:0]							
Reset	0	0	0	0	0	0	0	0

Figure 26-17. Flash Common Command Object Low Register (FCCOBLO)

26.3.2.11.1 FCCOB - NVM Command Mode

NVM command mode uses the indexed FCCOB register to provide a command code and its relevant parameters to the Memory Controller. The user first sets up all required FCCOB fields and then initiates the command's execution by writing a 1 to the CCIF bit in the FSTAT register (a 1 written by the user clears the CCIF command completion flag to 0). When the user clears the CCIF bit in the FSTAT register all FCCOB parameter fields are locked and cannot be changed by the user until the command completes (as evidenced by the Memory Controller returning CCIF to 1). Some commands return information to the FCCOB register array.

The generic format for the FCCOB parameter fields in NVM command mode is shown in Table 26-24. The return values are available for reading after the CCIF flag in the FSTAT register has been returned to 1 by the Memory Controller. Writes to the unimplemented parameter fields (CCOBIX = 110 and CCOBIX = 111) are ignored with reads from these fields returning 0x0000.

Table 26-24 shows the generic Flash command format. The high byte of the first word in the CCOB array contains the command code, followed by the parameters for this specific Flash command. For details on the FCCOB settings required by each command, see the Flash command descriptions in Section 26.4.6.

Table 26-24. FCCOB - NVM Command Mode (Typical Usage)

CCOBIX[2:0]	Byte	FCCOB Parameter Fields (NVM Command Mode)
000	HI	FCMD[7:0] defining Flash command
	LO	6'h0, Global address [17:16]
001	HI	Global address [15:8]
	LO	Global address [7:0]

Table 26-24. FCCOB - NVM Command Mode (Typical Usage)

CCOBIX[2:0]	Byte	FCCOB Parameter Fields (NVM Command Mode)
010	HI	Data 0 [15:8]
	LO	Data 0 [7:0]
011	HI	Data 1 [15:8]
	LO	Data 1 [7:0]
100	HI	Data 2 [15:8]
	LO	Data 2 [7:0]
101	HI	Data 3 [15:8]
	LO	Data 3 [7:0]

26.3.2.12 Flash Reserved1 Register (FRSV1)

This Flash register is reserved for factory testing.

Offset Module Base + 0x000C

	7	6	5	4	3	2	1	0
R	0	0	0	0	0	0	0	0
W								
Reset	0	0	0	0	0	0	0	0

= Unimplemented or Reserved

Figure 26-18. Flash Reserved1 Register (FRSV1)

All bits in the FRSV1 register read 0 and are not writable.

26.3.2.13 Flash Reserved2 Register (FRSV2)

This Flash register is reserved for factory testing.

Offset Module Base + 0x000D

	7	6	5	4	3	2	1	0
R	0	0	0	0	0	0	0	0
W								
Reset	0	0	0	0	0	0	0	0

= Unimplemented or Reserved

Figure 26-19. Flash Reserved2 Register (FRSV2)

All bits in the FRSV2 register read 0 and are not writable.

26.3.2.14 Flash Reserved3 Register (FRSV3)

This Flash register is reserved for factory testing.

Offset Module Base + 0x000E

	7	6	5	4	3	2	1	0
R	0	0	0	0	0	0	0	0
W								
Reset	0	0	0	0	0	0	0	0

= Unimplemented or Reserved

Figure 26-20. Flash Reserved3 Register (FRSV3)

All bits in the FRSV3 register read 0 and are not writable.

26.3.2.15 Flash Reserved4 Register (FRSV4)

This Flash register is reserved for factory testing.

Offset Module Base + 0x000F

	7	6	5	4	3	2	1	0
R	0	0	0	0	0	0	0	0
W								
Reset	0	0	0	0	0	0	0	0

= Unimplemented or Reserved

Figure 26-21. Flash Reserved4 Register (FRSV4)

All bits in the FRSV4 register read 0 and are not writable.

26.3.2.16 Flash Option Register (FOPT)

The FOPT register is the Flash option register.

Offset Module Base + 0x0010

	7	6	5	4	3	2	1	0
R	NV[7:0]							
W								
Reset	F[1]	F[1]	F[1]	F[1]	F[1]	F[1]	F[1]	F[1]

= Unimplemented or Reserved

Figure 26-22. Flash Option Register (FOPT)

1 Loaded from IFR Flash configuration field, during reset sequence.

All bits in the FOPT register are readable but are not writable.

During the reset sequence, the FOPT register is loaded from the Flash nonvolatile byte in the Flash configuration field at global address 0x3_FF0E located in P-Flash memory (see Table 26-4) as indicated by reset condition F in Figure 26-22. If a double bit fault is detected while reading the P-Flash phrase containing the Flash nonvolatile byte during the reset sequence, all bits in the FOPT register will be set.

Table 26-25. FOPT Field Descriptions

Field	Description
7–0 NV[7:0]	**Nonvolatile Bits** — The NV[7:0] bits are available as nonvolatile bits. Refer to the device user guide for proper use of the NV bits.

26.3.2.17 Flash Reserved5 Register (FRSV5)

This Flash register is reserved for factory testing.

Offset Module Base + 0x0011

	7	6	5	4	3	2	1	0
R	0	0	0	0	0	0	0	0
W								
Reset	0	0	0	0	0	0	0	0

= Unimplemented or Reserved

Figure 26-23. Flash Reserved5 Register (FRSV5)

All bits in the FRSV5 register read 0 and are not writable.

26.3.2.18 Flash Reserved6 Register (FRSV6)

This Flash register is reserved for factory testing.

Offset Module Base + 0x0012

	7	6	5	4	3	2	1	0
R	0	0	0	0	0	0	0	0
W								
Reset	0	0	0	0	0	0	0	0

= Unimplemented or Reserved

Figure 26-24. Flash Reserved6 Register (FRSV6)

All bits in the FRSV6 register read 0 and are not writable.

26.3.2.19 Flash Reserved7 Register (FRSV7)

This Flash register is reserved for factory testing.

Offset Module Base + 0x0013

	7	6	5	4	3	2	1	0
R	0	0	0	0	0	0	0	0
W								
Reset	0	0	0	0	0	0	0	0

= Unimplemented or Reserved

Figure 26-25. Flash Reserved7 Register (FRSV7)

All bits in the FRSV7 register read 0 and are not writable.

26.4 Functional Description

26.4.1 Modes of Operation

The FTMRG48K1 module provides the modes of operation normal and special . The operating mode is determined by module-level inputs and affects the FCLKDIV, FCNFG, and EEPROT registers (see Table 26-27).

26.4.2 IFR Version ID Word

The version ID word is stored in the IFR at address 0x0_40B6. The contents of the word are defined in Table 26-26.

Table 26-26. IFR Version ID Fields

[15:4]	[3:0]
Reserved	VERNUM

- VERNUM: Version number. The first version is number 0b_0001 with both 0b_0000 and 0b_1111 meaning ‘none’.

26.4.3 Internal NVM resource (NVMRES)

IFR is an internal NVM resource readable by CPU , when NVMRES is active. The IFR fields are shown in Table 26-5.

The NVMRES global address map is shown in Table 26-6.

26.4.4 Flash Command Operations

Flash command operations are used to modify Flash memory contents.

The next sections describe:

- How to write the FCLKDIV register that is used to generate a time base (FCLK) derived from BUSCLK for Flash program and erase command operations
- The command write sequence used to set Flash command parameters and launch execution
- Valid Flash commands available for execution, according to MCU functional mode and MCU security state.

26.4.4.1 Writing the FCLKDIV Register

Prior to issuing any Flash program or erase command after a reset, the user is required to write the FCLKDIV register to divide BUSCLK down to a target FCLK of 1 MHz. Table 26-8 shows recommended values for the FDIV field based on BUSCLK frequency.

NOTE

Programming or erasing the Flash memory cannot be performed if the bus clock runs at less than 0.8 MHz. Setting FDIV too high can destroy the Flash memory due to overstress. Setting FDIV too low can result in incomplete programming or erasure of the Flash memory cells.

When the FCLKDIV register is written, the FDIVLD bit is set automatically. If the FDIVLD bit is 0, the FCLKDIV register has not been written since the last reset. If the FCLKDIV register has not been written, any Flash program or erase command loaded during a command write sequence will not execute and the ACCERR bit in the FSTAT register will set.

26.4.4.2 Command Write Sequence

The Memory Controller will launch all valid Flash commands entered using a command write sequence.

Before launching a command, the ACCERR and FPVIOL bits in the FSTAT register must be clear (see Section 26.3.2.7) and the CCIF flag should be tested to determine the status of the current command write sequence. If CCIF is 0, the previous command write sequence is still active, a new command write sequence cannot be started, and all writes to the FCCOB register are ignored.

26.4.4.2.1 Define FCCOB Contents

The FCCOB parameter fields must be loaded with all required parameters for the Flash command being executed. Access to the FCCOB parameter fields is controlled via the CCOBIX bits in the FCCOBIX register (see Section 26.3.2.3).

The contents of the FCCOB parameter fields are transferred to the Memory Controller when the user clears the CCIF command completion flag in the FSTAT register (writing 1 clears the CCIF to 0). The CCIF flag will remain clear until the Flash command has completed. Upon completion, the Memory Controller will return CCIF to 1 and the FCCOB register will be used to communicate any results. The flow for a generic command write sequence is shown in Figure 26-26.

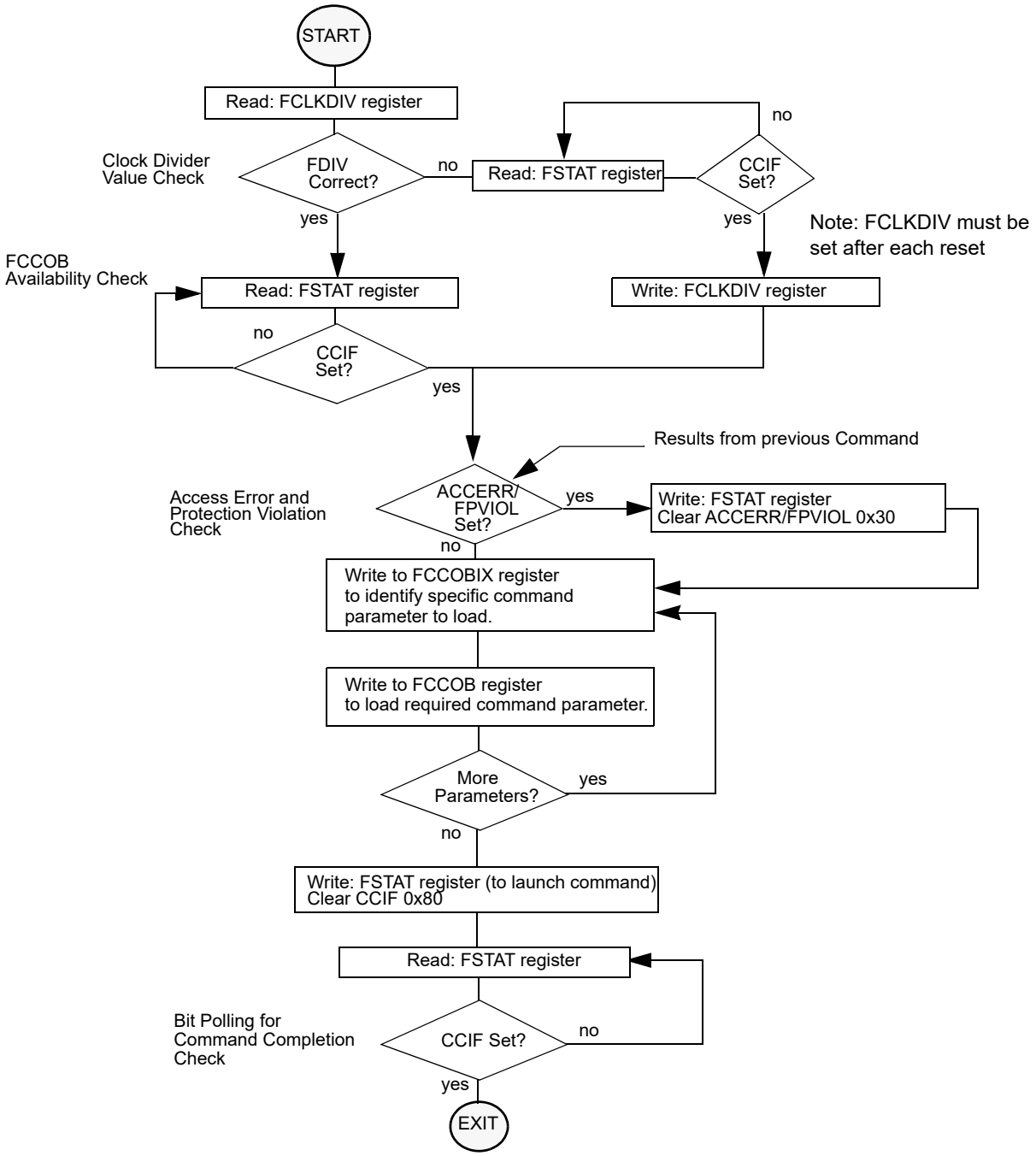

Figure 26-26. Generic Flash Command Write Sequence Flowchart

26.4.4.3 Valid Flash Module Commands

Table 26-27 present the valid Flash commands, as enabled by the combination of the functional MCU mode (Normal SingleChip NS, Special Singlechip SS) with the MCU security state (Unsecured, Secured).

Special Singlechip mode is selected by input mmc_ss_mode_ts2 asserted. MCU Secured state is selected by input mmc_secure input asserted.

Table 26-27. Flash Commands by Mode and Security State

FCMD	Command	Unsecured		Secured	
		NS[1]	SS[2]	NS[3]	SS[4]
0x01	Erase Verify All Blocks	*	*	*	*
0x02	Erase Verify Block	*	*	*	*
0x03	Erase Verify P-Flash Section	*	*	*	
0x04	Read Once	*	*	*	
0x06	Program P-Flash	*	*	*	
0x07	Program Once	*	*	*	
0x08	Erase All Blocks		*		*
0x09	Erase Flash Block	*	*	*	
0x0A	Erase P-Flash Sector	*	*	*	
0x0B	Unsecure Flash		*		*
0x0C	Verify Backdoor Access Key	*		*	
0x0D	Set User Margin Level	*	*	*	
0x0E	Set Field Margin Level		*		
0x10	Erase Verify EEPROM Section	*	*	*	
0x11	Program EEPROM	*	*	*	
0x12	Erase EEPROM Sector	*	*	*	

1 Unsecured Normal Single Chip mode
2 Unsecured Special Single Chip mode.
3 Secured Normal Single Chip mode.
4 Secured Special Single Chip mode.

26.4.4.4 P-Flash Commands

Table 26-28 summarizes the valid P-Flash commands along with the effects of the commands on the P-Flash block and other resources within the Flash module.

Table 26-28. P-Flash Commands

FCMD	Command	Function on P-Flash Memory
0x01	Erase Verify All Blocks	Verify that all P-Flash (and EEPROM) blocks are erased.

Table 26-28. P-Flash Commands

FCMD	Command	Function on P-Flash Memory
0x02	Erase Verify Block	Verify that a P-Flash block is erased.
0x03	Erase Verify P-Flash Section	Verify that a given number of words starting at the address provided are erased.
0x04	Read Once	Read a dedicated 64 byte field in the nonvolatile information register in P-Flash block that was previously programmed using the Program Once command.
0x06	Program P-Flash	Program a phrase in a P-Flash block.
0x07	Program Once	Program a dedicated 64 byte field in the nonvolatile information register in P-Flash block that is allowed to be programmed only once.
0x08	Erase All Blocks	Erase all P-Flash (and EEPROM) blocks. An erase of all Flash blocks is only possible when the FPLDIS, FPHDIS, and FPOPEN bits in the FPROT register and the DPOPEN bit in the EEPROT register are set prior to launching the command.
0x09	Erase Flash Block	Erase a P-Flash (or EEPROM) block. An erase of the full P-Flash block is only possible when FPLDIS, FPHDIS and FPOPEN bits in the FPROT register are set prior to launching the command.
0x0A	Erase P-Flash Sector	Erase all bytes in a P-Flash sector.
0x0B	Unsecure Flash	Supports a method of releasing MCU security by erasing all P-Flash (and EEPROM) blocks and verifying that all P-Flash (and EEPROM) blocks are erased.
0x0C	Verify Backdoor Access Key	Supports a method of releasing MCU security by verifying a set of security keys.
0x0D	Set User Margin Level	Specifies a user margin read level for all P-Flash blocks.
0x0E	Set Field Margin Level	Specifies a field margin read level for all P-Flash blocks (special modes only).

26.4.4.5 EEPROM Commands

Table 26-29 summarizes the valid EEPROM commands along with the effects of the commands on the EEPROM block.

Table 26-29. EEPROM Commands

FCMD	Command	Function on EEPROM Memory
0x01	Erase Verify All Blocks	Verify that all EEPROM (and P-Flash) blocks are erased.
0x02	Erase Verify Block	Verify that the EEPROM block is erased.

Table 26-29. EEPROM Commands

FCMD	Command	Function on EEPROM Memory
0x08	Erase All Blocks	Erase all EEPROM (and P-Flash) blocks. An erase of all Flash blocks is only possible when the FPLDIS, FPHDIS, and FPOPEN bits in the FPROT register and the DPOPEN bit in the EEPROT register are set prior to launching the command.
0x09	Erase Flash Block	Erase a EEPROM (or P-Flash) block. An erase of the full EEPROM block is only possible when DPOPEN bit in the EEPROT register is set prior to launching the command.
0x0B	Unsecure Flash	Supports a method of releasing MCU security by erasing all EEPROM (and P-Flash) blocks and verifying that all EEPROM (and P-Flash) blocks are erased.
0x0D	Set User Margin Level	Specifies a user margin read level for the EEPROM block.
0x0E	Set Field Margin Level	Specifies a field margin read level for the EEPROM block (special modes only).
0x10	Erase Verify EEPROM Section	Verify that a given number of words starting at the address provided are erased.
0x11	Program EEPROM	Program up to four words in the EEPROM block.
0x12	Erase EEPROM Sector	Erase all bytes in a sector of the EEPROM block.

26.4.5 Allowed Simultaneous P-Flash and EEPROM Operations

Only the operations marked ‘OK’ in Table 26-30 are permitted to be run simultaneously on the Program Flash and EEPROM blocks. Some operations cannot be executed simultaneously because certain hardware resources are shared by the two memories. The priority has been placed on permitting Program Flash reads while program and erase operations execute on the EEPROM, providing read (P-Flash) while write (EEPROM) functionality.

Table 26-30. Allowed P-Flash and EEPROM Simultaneous Operations

	EEPROM				
Program Flash	**Read**	**Margin Read[1]**	**Program**	**Sector Erase**	**Mass Erase[2]**
Read		OK	OK	OK	
Margin Read[1]					
Program					
Sector Erase					
Mass Erase[2]					OK

1 A ‘Margin Read’ is any read after executing the margin setting commands ‘Set User Margin Level’ or ‘Set Field Margin Level’ with anything but the ‘normal’ level specified. See the Note on margin settings in Section 26.4.6.12 and Section 26.4.6.13.

2 The ‘Mass Erase’ operations are commands ‘Erase All Blocks’ and ‘Erase Flash Block’

26.4.6 Flash Command Description

This section provides details of all available Flash commands launched by a command write sequence. The ACCERR bit in the FSTAT register will be set during the command write sequence if any of the following illegal steps are performed, causing the command not to be processed by the Memory Controller:

- Starting any command write sequence that programs or erases Flash memory before initializing the FCLKDIV register
- Writing an invalid command as part of the command write sequence
- For additional possible errors, refer to the error handling table provided for each command

If a Flash block is read during execution of an algorithm (CCIF = 0) on that same block, the read operation will return invalid data if both flags SFDIF and DFDIF are set. If the SFDIF or DFDIF flags were not previously set when the invalid read operation occurred, both the SFDIF and DFDIF flags will be set.

If the ACCERR or FPVIOL bits are set in the FSTAT register, the user must clear these bits before starting any command write sequence (see Section 26.3.2.7).

CAUTION

A Flash word or phrase must be in the erased state before being programmed. Cumulative programming of bits within a Flash word or phrase is not allowed.

26.4.6.1 Erase Verify All Blocks Command

The Erase Verify All Blocks command will verify that all P-Flash and EEPROM blocks have been erased.

Table 26-31. Erase Verify All Blocks Command FCCOB Requirements

CCOBIX[2:0]	FCCOB Parameters	
000	0x01	Not required

Upon clearing CCIF to launch the Erase Verify All Blocks command, the Memory Controller will verify that the entire Flash memory space is erased. The CCIF flag will set after the Erase Verify All Blocks operation has completed. If all blocks are not erased, it means blank check failed, both MGSTAT bits will be set.

Table 26-32. Erase Verify All Blocks Command Error Handling

Register	Error Bit	Error Condition
FSTAT	ACCERR	Set if CCOBIX[2:0] != 000 at command launch
	FPVIOL	None
	MGSTAT1	Set if any errors have been encountered during the reador if blank check failed .
	MGSTAT0	Set if any non-correctable errors have been encountered during the read or if blank check failed.

26.4.6.2 Erase Verify Block Command

The Erase Verify Block command allows the user to verify that an entire P-Flash or EEPROM block has been erased. The FCCOB FlashBlockSelectionCode[1:0] bits determine which block must be verified.

Table 26-33. Erase Verify Block Command FCCOB Requirements

CCOBIX[2:0]	FCCOB Parameters	
000	0x02	Flash block selection code [1:0]. See Table 26-34

Table 26-34. Flash block selection code description

Selection code[1:0]	Flash block to be verified
00	EEPROM
01	Invalid (ACCERR)
10	Invalid (ACCERR)
11	P-Flash

Upon clearing CCIF to launch the Erase Verify Block command, the Memory Controller will verify that the selected P-Flash or EEPROM block is erased. The CCIF flag will set after the Erase Verify Block operation has completed.If the block is not erased, it means blank check failed, both MGSTAT bits will be set.

Table 26-35. Erase Verify Block Command Error Handling

Register	Error Bit	Error Condition
FSTAT	ACCERR	Set if CCOBIX[2:0] != 000 at command launch
		Set if an invalid FlashBlockSelectionCode[1:0] is supplied
	FPVIOL	None
	MGSTAT1	Set if any errors have been encountered during the read or if blank check failed.
	MGSTAT0	Set if any non-correctable errors have been encountered during the read or if blank check failed.

26.4.6.3 Erase Verify P-Flash Section Command

The Erase Verify P-Flash Section command will verify that a section of code in the P-Flash memory is erased. The Erase Verify P-Flash Section command defines the starting point of the code to be verified and the number of phrases.

Table 26-36. Erase Verify P-Flash Section Command FCCOB Requirements

CCOBIX[2:0]	FCCOB Parameters	
000	0x03	Global address [17:16] of a P-Flash block
001	Global address [15:0] of the first phrase to be verified	
010	Number of phrases to be verified	

Upon clearing CCIF to launch the Erase Verify P-Flash Section command, the Memory Controller will verify the selected section of Flash memory is erased. The CCIF flag will set after the Erase Verify P-Flash Section operation has completed. If the section is not erased, it means blank check failed, both MGSTAT bits will be set.

Table 26-37. Erase Verify P-Flash Section Command Error Handling

Register	Error Bit	Error Condition
FSTAT	ACCERR	Set if CCOBIX[2:0] != 010 at command launch
		Set if command not available in current mode (see Table 26-27)
		Set if an invalid global address [17:0] is supplied see Table 26-3)
		Set if a misaligned phrase address is supplied (global address [2:0] != 000)
		Set if the requested section crosses a the P-Flash address boundary
	FPVIOL	None
	MGSTAT1	Set if any errors have been encountered during the read or if blank check failed.
	MGSTAT0	Set if any non-correctable errors have been encountered during the read or if blank check failed.

26.4.6.4 Read Once Command

The Read Once command provides read access to a reserved 64 byte field (8 phrases) located in the nonvolatile information register of P-Flash. The Read Once field is programmed using the Program Once command described in Section 26.4.6.6. The Read Once command must not be executed from the Flash block containing the Program Once reserved field to avoid code runaway.

Table 26-38. Read Once Command FCCOB Requirements

CCOBIX[2:0]	FCCOB Parameters	
000	0x04	Not Required
001	Read Once phrase index (0x0000 - 0x0007)	
010	Read Once word 0 value	
011	Read Once word 1 value	
100	Read Once word 2 value	
101	Read Once word 3 value	

Upon clearing CCIF to launch the Read Once command, a Read Once phrase is fetched and stored in the FCCOB indexed register. The CCIF flag will set after the Read Once operation has completed. Valid phrase index values for the Read Once command range from 0x0000 to 0x0007. During execution of the Read Once command, any attempt to read addresses within P-Flash block will return invalid data.

Table 26-39. Read Once Command Error Handling

Register	Error Bit	Error Condition
FSTAT	ACCERR	Set if CCOBIX[2:0] != 001 at command launch
		Set if command not available in current mode (see Table 26-27)
		Set if an invalid phrase index is supplied
	FPVIOL	None
	MGSTAT1	Set if any errors have been encountered during the read
	MGSTAT0	Set if any non-correctable errors have been encountered during the read

26.4.6.5 Program P-Flash Command

The Program P-Flash operation will program a previously erased phrase in the P-Flash memory using an embedded algorithm.

CAUTION

A P-Flash phrase must be in the erased state before being programmed. Cumulative programming of bits within a Flash phrase is not allowed.

Table 26-40. Program P-Flash Command FCCOB Requirements

CCOBIX[2:0]	FCCOB Parameters	
000	0x06	Global address [17:16] to identify P-Flash block
001	Global address [15:0] of phrase location to be programmed[1]	
010	Word 0 program value	
011	Word 1 program value	
100	Word 2 program value	
101	Word 3 program value	

1 Global address [2:0] must be 000

Upon clearing CCIF to launch the Program P-Flash command, the Memory Controller will program the data words to the supplied global address and will then proceed to verify the data words read back as expected. The CCIF flag will set after the Program P-Flash operation has completed.

Table 26-41. Program P-Flash Command Error Handling

Register	Error Bit	Error Condition
FSTAT	ACCERR	Set if CCOBIX[2:0] != 101 at command launch
		Set if command not available in current mode (see Table 26-27)
		Set if an invalid global address [17:0] is supplied see Table 26-3)
		Set if a misaligned phrase address is supplied (global address [2:0] != 000)
	FPVIOL	Set if the global address [17:0] points to a protected area
	MGSTAT1	Set if any errors have been encountered during the verify operation
	MGSTAT0	Set if any non-correctable errors have been encountered during the verify operation

26.4.6.6 Program Once Command

The Program Once command restricts programming to a reserved 64 byte field (8 phrases) in the nonvolatile information register located in P-Flash. The Program Once reserved field can be read using the Read Once command as described in Section 26.4.6.4. The Program Once command must only be issued once since the nonvolatile information register in P-Flash cannot be erased. The Program Once command must not be executed from the Flash block containing the Program Once reserved field to avoid code runaway.

Table 26-42. Program Once Command FCCOB Requirements

CCOBIX[2:0]	FCCOB Parameters	
000	0x07	Not Required
001	Program Once phrase index (0x0000 - 0x0007)	
010	Program Once word 0 value	
011	Program Once word 1 value	
100	Program Once word 2 value	
101	Program Once word 3 value	

Upon clearing CCIF to launch the Program Once command, the Memory Controller first verifies that the selected phrase is erased. If erased, then the selected phrase will be programmed and then verified with read back. The CCIF flag will remain clear, setting only after the Program Once operation has completed.

The reserved nonvolatile information register accessed by the Program Once command cannot be erased and any attempt to program one of these phrases a second time will not be allowed. Valid phrase index values for the Program Once command range from 0x0000 to 0x0007. During execution of the Program Once command, any attempt to read addresses within P-Flash will return invalid data.

Table 26-43. Program Once Command Error Handling

Register	Error Bit	Error Condition
FSTAT	ACCERR	Set if CCOBIX[2:0] != 101 at command launch
		Set if command not available in current mode (see Table 26-27)
		Set if an invalid phrase index is supplied
		Set if the requested phrase has already been programmed[1]
	FPVIOL	None
	MGSTAT1	Set if any errors have been encountered during the verify operation
	MGSTAT0	Set if any non-correctable errors have been encountered during the verify operation

1 If a Program Once phrase is initially programmed to 0xFFFF_FFFF_FFFF_FFFF, the Program Once command will be allowed to execute again on that same phrase.

26.4.6.7 Erase All Blocks Command

The Erase All Blocks operation will erase the entire P-Flash and EEPROM memory space.

Table 26-44. Erase All Blocks Command FCCOB Requirements

CCOBIX[2:0]	FCCOB Parameters	
000	0x08	Not required

Upon clearing CCIF to launch the Erase All Blocks command, the Memory Controller will erase the entire Flash memory space and verify that it is erased. If the Memory Controller verifies that the entire Flash memory space was properly erased, security will be released. During the execution of this command (CCIF=0) the user must not write to any Flash module register. The CCIF flag will set after the Erase All Blocks operation has completed.

Table 26-45. Erase All Blocks Command Error Handling

Register	Error Bit	Error Condition
FSTAT	ACCERR	Set if CCOBIX[2:0] != 000 at command launch
		Set if command not available in current mode (see Table 26-27)
	FPVIOL	Set if any area of the P-Flash or EEPROM memory is protected
	MGSTAT1	Set if any errors have been encountered during the verify operation
	MGSTAT0	Set if any non-correctable errors have been encountered during the verify operation

26.4.6.8 Erase Flash Block Command

The Erase Flash Block operation will erase all addresses in a P-Flash or EEPROM block.

Table 26-46. Erase Flash Block Command FCCOB Requirements

CCOBIX[2:0]	FCCOB Parameters	
000	0x09	Global address [17:16] to identify Flash block
001	Global address [15:0] in Flash block to be erased	

Upon clearing CCIF to launch the Erase Flash Block command, the Memory Controller will erase the selected Flash block and verify that it is erased. The CCIF flag will set after the Erase Flash Block operation has completed.

Table 26-47. Erase Flash Block Command Error Handling

Register	Error Bit	Error Condition
FSTAT	ACCERR	Set if CCOBIX[2:0] != 001 at command launch
		Set if command not available in current mode (see Table 26-27)
		Set if an invalid global address [17:16] is supplied
		Set if the supplied P-Flash address is not phrase-aligned or if the EEPROM address is not word-aligned
	FPVIOL	Set if an area of the selected Flash block is protected
	MGSTAT1	Set if any errors have been encountered during the verify operation
	MGSTAT0	Set if any non-correctable errors have been encountered during the verify operation

26.4.6.9 Erase P-Flash Sector Command

The Erase P-Flash Sector operation will erase all addresses in a P-Flash sector.

Table 26-48. Erase P-Flash Sector Command FCCOB Requirements

CCOBIX[2:0]	FCCOB Parameters	
000	0x0A	Global address [17:16] to identify P-Flash block to be erased
001	Global address [15:0] anywhere within the sector to be erased. Refer to Section 26.1.2.1 for the P-Flash sector size.	

Upon clearing CCIF to launch the Erase P-Flash Sector command, the Memory Controller will erase the selected Flash sector and then verify that it is erased. The CCIF flag will be set after the Erase P-Flash Sector operation has completed.

Table 26-49. Erase P-Flash Sector Command Error Handling

Register	Error Bit	Error Condition
FSTAT	ACCERR	Set if CCOBIX[2:0] != 001 at command launch
		Set if command not available in current mode (see Table 26-27)
		Set if an invalid global address [17:16] is supplied see Table 26-3)
		Set if a misaligned phrase address is supplied (global address [2:0] != 000)
	FPVIOL	Set if the selected P-Flash sector is protected
	MGSTAT1	Set if any errors have been encountered during the verify operation
	MGSTAT0	Set if any non-correctable errors have been encountered during the verify operation

26.4.6.10 Unsecure Flash Command

The Unsecure Flash command will erase the entire P-Flash and EEPROM memory space and, if the erase is successful, will release security.

Table 26-50. Unsecure Flash Command FCCOB Requirements

CCOBIX[2:0]	FCCOB Parameters	
000	0x0B	Not required

Upon clearing CCIF to launch the Unsecure Flash command, the Memory Controller will erase the entire P-Flash and EEPROM memory space and verify that it is erased. If the Memory Controller verifies that the entire Flash memory space was properly erased, security will be released. If the erase verify is not successful, the Unsecure Flash operation sets MGSTAT1 and terminates without changing the security state. During the execution of this command (CCIF=0) the user must not write to any Flash module register. The CCIF flag is set after the Unsecure Flash operation has completed.

Table 26-51. Unsecure Flash Command Error Handling

Register	Error Bit	Error Condition
FSTAT	ACCERR	Set if CCOBIX[2:0] != 000 at command launch
		Set if command not available in current mode (see Table 26-27)
	FPVIOL	Set if any area of the P-Flash or EEPROM memory is protected
	MGSTAT1	Set if any errors have been encountered during the verify operation
	MGSTAT0	Set if any non-correctable errors have been encountered during the verify operation

26.4.6.11 Verify Backdoor Access Key Command

The Verify Backdoor Access Key command will only execute if it is enabled by the KEYEN bits in the FSEC register (see Table 26-10). The Verify Backdoor Access Key command releases security if user-supplied keys match those stored in the Flash security bytes of the Flash configuration field (see

Table 26-4). The Verify Backdoor Access Key command must not be executed from the Flash block containing the backdoor comparison key to avoid code runaway.

Table 26-52. Verify Backdoor Access Key Command FCCOB Requirements

CCOBIX[2:0]	FCCOB Parameters	
000	0x0C	Not required
001	Key 0	
010	Key 1	
011	Key 2	
100	Key 3	

Upon clearing CCIF to launch the Verify Backdoor Access Key command, the Memory Controller will check the FSEC KEYEN bits to verify that this command is enabled. If not enabled, the Memory Controller sets the ACCERR bit in the FSTAT register and terminates. If the command is enabled, the Memory Controller compares the key provided in FCCOB to the backdoor comparison key in the Flash configuration field with Key 0 compared to 0x3_FF00, etc. If the backdoor keys match, security will be released. If the backdoor keys do not match, security is not released and all future attempts to execute the Verify Backdoor Access Key command are aborted (set ACCERR) until a reset occurs. The CCIF flag is set after the Verify Backdoor Access Key operation has completed.

Table 26-53. Verify Backdoor Access Key Command Error Handling

Register	Error Bit	Error Condition
FSTAT	ACCERR	Set if CCOBIX[2:0] != 100 at command launch
		Set if an incorrect backdoor key is supplied
		Set if backdoor key access has not been enabled (KEYEN[1:0] != 10, see Section 26.3.2.2)
		Set if the backdoor key has mismatched since the last reset
	FPVIOL	None
	MGSTAT1	None
	MGSTAT0	None

26.4.6.12 Set User Margin Level Command

The Set User Margin Level command causes the Memory Controller to set the margin level for future read operations of the P-Flash or EEPROM block.

Table 26-54. Set User Margin Level Command FCCOB Requirements

CCOBIX[2:0]	FCCOB Parameters	
000	0x0D	Flash block selection code [1:0]. See
001	Margin level setting.	

Upon clearing CCIF to launch the Set User Margin Level command, the Memory Controller will set the user margin level for the targeted block and then set the CCIF flag.

NOTE

When the EEPROM block is targeted, the EEPROM user margin levels are applied only to the EEPROM reads. However, when the P-Flash block is targeted, the P-Flash user margin levels are applied to both P-Flash and EEPROM reads. It is not possible to apply user margin levels to the P-Flash block only.

Valid margin level settings for the Set User Margin Level command are defined in Table 26-55.

Table 26-55. Valid Set User Margin Level Settings

CCOB (CCOBIX=001)	Level Description
0x0000	Return to Normal Level
0x0001	User Margin-1 Level[1]
0x0002	User Margin-0 Level[2]

[1] Read margin to the erased state

[2] Read margin to the programmed state

Table 26-56. Set User Margin Level Command Error Handling

Register	Error Bit	Error Condition
FSTAT	ACCERR	Set if CCOBIX[2:0] != 001 at command launch
		Set if command not available in current mode (see Table 26-27)
		Set if an invalid FlashBlockSelectionCode[1:0] is supplied (See Table 26-34)
		Set if an invalid margin level setting is supplied
	FPVIOL	None
	MGSTAT1	None
	MGSTAT0	None

NOTE

User margin levels can be used to check that Flash memory contents have adequate margin for normal level read operations. If unexpected results are encountered when checking Flash memory contents at user margin levels, a potential loss of information has been detected.

26.4.6.13 Set Field Margin Level Command

The Set Field Margin Level command, valid in special modes only, causes the Memory Controller to set the margin level specified for future read operations of the P-Flash or EEPROM block.

Upon clearing CCIF to launch the Set Field Margin Level command, the Memory Controller will set the field margin level for the targeted block and then set the CCIF flag.

Table 26-57. Set Field Margin Level Command FCCOB Requirements

CCOBIX[2:0]	FCCOB Parameters	
000	0x0E	Flash block selection code [1:0]. See Table 26-34
001	Margin level setting.	

NOTE

When the EEPROM block is targeted, the EEPROM field margin levels are applied only to the EEPROM reads. However, when the P-Flash block is targeted, the P-Flash field margin levels are applied to both P-Flash and EEPROM reads. It is not possible to apply field margin levels to the P-Flash block only.

Valid margin level settings for the Set Field Margin Level command are defined in Table 26-58.

Table 26-58. Valid Set Field Margin Level Settings

CCOB (CCOBIX=001)	Level Description
0x0000	Return to Normal Level
0x0001	User Margin-1 Level[1]
0x0002	User Margin-0 Level[2]
0x0003	Field Margin-1 Level[1]
0x0004	Field Margin-0 Level[2]

1 Read margin to the erased state

2 Read margin to the programmed state

Table 26-59. Set Field Margin Level Command Error Handling

Register	Error Bit	Error Condition
FSTAT	ACCERR	Set if CCOBIX[2:0] != 001 at command launch
		Set if command not available in current mode (see Table 26-27)
		Set if an invalid FlashBlockSelectionCode[1:0] is supplied (See Table 26-34)
		Set if an invalid margin level setting is supplied
	FPVIOL	None
	MGSTAT1	None
	MGSTAT0	None

CAUTION

Field margin levels must only be used during verify of the initial factory programming.

NOTE

Field margin levels can be used to check that Flash memory contents have adequate margin for data retention at the normal level setting. If unexpected results are encountered when checking Flash memory contents at field margin levels, the Flash memory contents should be erased and reprogrammed.

26.4.6.14 Erase Verify EEPROM Section Command

The Erase Verify EEPROM Section command will verify that a section of code in the EEPROM is erased. The Erase Verify EEPROM Section command defines the starting point of the data to be verified and the number of words.

Table 26-60. Erase Verify EEPROM Section Command FCCOB Requirements

CCOBIX[2:0]	FCCOB Parameters	
000	0x10	Global address [17:16] to identify the EEPROM block
001	Global address [15:0] of the first word to be verified	
010	Number of words to be verified	

Upon clearing CCIF to launch the Erase Verify EEPROM Section command, the Memory Controller will verify the selected section of EEPROM memory is erased. The CCIF flag will set after the Erase Verify EEPROM Section operation has completed. If the section is not erased, it means blank check failed, both MGSTAT bits will be set.

Table 26-61. Erase Verify EEPROM Section Command Error Handling

Register	Error Bit	Error Condition
FSTAT	ACCERR	Set if CCOBIX[2:0] != 010 at command launch
		Set if command not available in current mode (see Table 26-27)
		Set if an invalid global address [17:0] is supplied
		Set if a misaligned word address is supplied (global address [0] != 0)
		Set if the requested section breaches the end of the EEPROM block
	FPVIOL	None
	MGSTAT1	Set if any errors have been encountered during the read or if blank check failed.
	MGSTAT0	Set if any non-correctable errors have been encountered during the read or if blank check failed.

26.4.6.15 Program EEPROM Command

The Program EEPROM operation programs one to four previously erased words in the EEPROM block. The Program EEPROM operation will confirm that the targeted location(s) were successfully programmed upon completion.

CAUTION

A Flash word must be in the erased state before being programmed. Cumulative programming of bits within a Flash word is not allowed.

Table 26-62. Program EEPROM Command FCCOB Requirements

CCOBIX[2:0]	FCCOB Parameters	
000	0x11	Global address [17:16] to identify the EEPROM block
001	Global address [15:0] of word to be programmed	
010	Word 0 program value	
011	Word 1 program value, if desired	
100	Word 2 program value, if desired	
101	Word 3 program value, if desired	

Upon clearing CCIF to launch the Program EEPROM command, the user-supplied words will be transferred to the Memory Controller and be programmed if the area is unprotected. The CCOBIX index value at Program EEPROM command launch determines how many words will be programmed in the EEPROM block. The CCIF flag is set when the operation has completed.

Table 26-63. Program EEPROM Command Error Handling

Register	Error Bit	Error Condition
FSTAT	ACCERR	Set if CCOBIX[2:0] < 010 at command launch
		Set if CCOBIX[2:0] > 101 at command launch
		Set if command not available in current mode (see Table 26-27)
		Set if an invalid global address [17:0] is supplied
		Set if a misaligned word address is supplied (global address [0] != 0)
		Set if the requested group of words breaches the end of the EEPROM block
	FPVIOL	Set if the selected area of the EEPROM memory is protected
	MGSTAT1	Set if any errors have been encountered during the verify operation
	MGSTAT0	Set if any non-correctable errors have been encountered during the verify operation

26.4.6.16 Erase EEPROM Sector Command

The Erase EEPROM Sector operation will erase all addresses in a sector of the EEPROM block.

Table 26-64. Erase EEPROM Sector Command FCCOB Requirements

CCOBIX[2:0]	FCCOB Parameters	
000	0x12	Global address [17:16] to identify EEPROM block
001	Global address [15:0] anywhere within the sector to be erased. See Section 26.1.2.2 for EEPROM sector size.	

Upon clearing CCIF to launch the Erase EEPROM Sector command, the Memory Controller will erase the selected Flash sector and verify that it is erased. The CCIF flag will set after the Erase EEPROM Sector operation has completed.

Table 26-65. Erase EEPROM Sector Command Error Handling

Register	Error Bit	Error Condition
FSTAT	ACCERR	Set if CCOBIX[2:0] != 001 at command launch
		Set if command not available in current mode (see Table 26-27)
		Set if an invalid global address [17:0] is suppliedsee Table 26-3)
		Set if a misaligned word address is supplied (global address [0] != 0)
	FPVIOL	Set if the selected area of the EEPROM memory is protected
	MGSTAT1	Set if any errors have been encountered during the verify operation
	MGSTAT0	Set if any non-correctable errors have been encountered during the verify operation

26.4.7 Interrupts

The Flash module can generate an interrupt when a Flash command operation has completed or when a Flash command operation has detected an ECC fault.

Table 26-66. Flash Interrupt Sources

Interrupt Source	Interrupt Flag	Local Enable	Global (CCR) Mask
Flash Command Complete	CCIF (FSTAT register)	CCIE (FCNFG register)	I Bit
ECC Double Bit Fault on Flash Read	DFDIF (FERSTAT register)	DFDIE (FERCNFG register)	I Bit
ECC Single Bit Fault on Flash Read	SFDIF (FERSTAT register)	SFDIE (FERCNFG register)	I Bit

NOTE

Vector addresses and their relative interrupt priority are determined at the MCU level.

26.4.7.1 Description of Flash Interrupt Operation

The Flash module uses the CCIF flag in combination with the CCIE interrupt enable bit to generate the Flash command interrupt request. The Flash module uses the DFDIF and SFDIF flags in combination with the DFDIE and SFDIE interrupt enable bits to generate the Flash error interrupt request. For a detailed description of the register bits involved, refer to Section 26.3.2.5, “Flash Configuration Register (FCNFG)”, Section 26.3.2.6, “Flash Error Configuration Register (FERCNFG)”, Section 26.3.2.7, “Flash Status Register (FSTAT)”, and Section 26.3.2.8, “Flash Error Status Register (FERSTAT)”.

The logic used for generating the Flash module interrupts is shown in Figure 26-27.

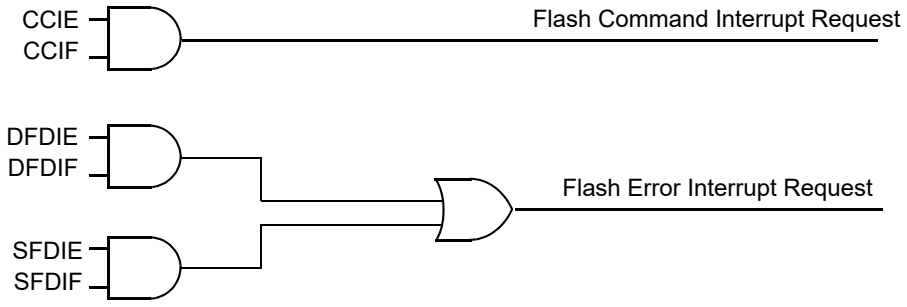

Figure 26-27. Flash Module Interrupts Implementation

26.4.8 Wait Mode

The Flash module is not affected if the MCU enters wait mode. The Flash module can recover the MCU from wait via the CCIF interrupt (see Section 26.4.7, “Interrupts”).

26.4.9 Stop Mode

If a Flash command is active (CCIF = 0) when the MCU requests stop mode, the current Flash operation will be completed before the MCU is allowed to enter stop mode.

26.5 Security

The Flash module provides security information to the MCU. The Flash security state is defined by the SEC bits of the FSEC register (see Table 26-11). During reset, the Flash module initializes the FSEC register using data read from the security byte of the Flash configuration field at global address 0x3_FF0F. The security state out of reset can be permanently changed by programming the security byte assuming that the MCU is starting from a mode where the necessary P-Flash erase and program commands are available and that the upper region of the P-Flash is unprotected. If the Flash security byte is successfully programmed, its new value will take affect after the next MCU reset.

The following subsections describe these security-related subjects:

- Unsecuring the MCU using Backdoor Key Access
- Unsecuring the MCU in Special Single Chip Mode using BDM
- Mode and Security Effects on Flash Command Availability

26.5.1 Unsecuring the MCU using Backdoor Key Access

The MCU may be unsecured by using the backdoor key access feature which requires knowledge of the contents of the backdoor keys (four 16-bit words programmed at addresses 0x3_FF00-0x3_FF07). If the KEYEN[1:0] bits are in the enabled state (see Section 26.3.2.2), the Verify Backdoor Access Key command (see Section 26.4.6.11) allows the user to present four prospective keys for comparison to the keys stored in the Flash memory via the Memory Controller. If the keys presented in the Verify Backdoor Access Key command match the backdoor keys stored in the Flash memory, the SEC bits in the FSEC register (see Table 26-11) will be changed to unsecure the MCU. Key values of 0x0000 and 0xFFFF are not permitted as backdoor keys. While the Verify Backdoor Access Key command is active, P-Flash memory and EEPROM memory will not be available for read access and will return invalid data.

The user code stored in the P-Flash memory must have a method of receiving the backdoor keys from an external stimulus. This external stimulus would typically be through one of the on-chip serial ports.

If the KEYEN[1:0] bits are in the enabled state (see Section 26.3.2.2), the MCU can be unsecured by the backdoor key access sequence described below:

1. Follow the command sequence for the Verify Backdoor Access Key command as explained in Section 26.4.6.11
2. If the Verify Backdoor Access Key command is successful, the MCU is unsecured and the SEC[1:0] bits in the FSEC register are forced to the unsecure state of 10

The Verify Backdoor Access Key command is monitored by the Memory Controller and an illegal key will prohibit future use of the Verify Backdoor Access Key command. A reset of the MCU is the only method to re-enable the Verify Backdoor Access Key command. The security as defined in the Flash security byte (0x3_FF0F) is not changed by using the Verify Backdoor Access Key command sequence. The backdoor keys stored in addresses 0x3_FF00-0x3_FF07 are unaffected by the Verify Backdoor Access Key command sequence. The Verify Backdoor Access Key command sequence has no effect on the program and erase protections defined in the Flash protection register, FPROT.

After the backdoor keys have been correctly matched, the MCU will be unsecured. After the MCU is unsecured, the sector containing the Flash security byte can be erased and the Flash security byte can be reprogrammed to the unsecure state, if desired. In the unsecure state, the user has full control of the contents of the backdoor keys by programming addresses 0x3_FF00-0x3_FF07 in the Flash configuration field.

26.5.2 Unsecuring the MCU in Special Single Chip Mode using BDM

A secured MCU can be unsecured in special single chip mode by using the following method to erase the P-Flash and EEPROM memory:

1. Reset the MCU into special single chip mode
2. Delay while the BDM executes the Erase Verify All Blocks command write sequence to check if the P-Flash and EEPROM memories are erased
3. Send BDM commands to disable protection in the P-Flash and EEPROM memory
4. Execute the Erase All Blocks command write sequence to erase the P-Flash and EEPROM memory. Alternatively the Unsecure Flash command can be executed, if so the steps 5 and 6 below are skeeped.
5. After the CCIF flag sets to indicate that the Erase All Blocks operation has completed, reset the MCU into special single chip mode
6. Delay while the BDM executes the Erase Verify All Blocks command write sequence to verify that the P-Flash and EEPROM memory are erased

If the P-Flash and EEPROM memory are verified as erased, the MCU will be unsecured. All BDM commands will now be enabled and the Flash security byte may be programmed to the unsecure state by continuing with the following steps:

7. Send BDM commands to execute the Program P-Flash command write sequence to program the Flash security byte to the unsecured state

8. Reset the MCU

26.5.3 Mode and Security Effects on Flash Command Availability

The availability of Flash module commands depends on the MCU operating mode and security state as shown in Table 26-27.

26.6 Initialization

On each system reset the flash module executes an initialization sequence which establishes initial values for the Flash Block Configuration Parameters, the FPROT and EEPROT protection registers, and the FOPT and FSEC registers. The initialization routine reverts to built-in default values that leave the module in a fully protected and secured state if errors are encountered during execution of the reset sequence. If a double bit fault is detected during the reset sequence, both MGSTAT bits in the FSTAT register will be set.

CCIF is cleared throughout the initialization sequence. The Flash module holds off all CPU access for a portion of the initialization sequence. Flash reads are allowed once the hold is removed. Completion of the initialization sequence is marked by setting CCIF high which enables user commands.

If a reset occurs while any Flash command is in progress, that command will be immediately aborted. The state of the word being programmed or the sector/block being erased is not guaranteed.

Chapter 27
64 KByte Flash Module (S12FTMRG64K1V1)

Table 27-1. Revision History

Revision Number	Revision Date	Sections Affected	Description of Changes
V01.04	17 Jun 2010	27.4.6.1/27-950 27.4.6.2/27-951 27.4.6.3/27-951 27.4.6.14/27-961	Clarify Erase Verify Commands Descriptions related to the bits MGSTAT[1:0] of the register FSTAT.
V01.05	20 Aug 2010	27.4.6.2/27-951 27.4.6.12/27-958 27.4.6.13/27-960	Updated description of the commands RD1BLK, MLOADU and MLOADF
V01.06	31 Jan 2011	27.3.2.9/27-933	Updated description of protection on Section 27.3.2.9

27.1 Introduction

The FTMRG64K1 module implements the following:

- 64Kbytes of P-Flash (Program Flash) memory
- 2 Kbytes of EEPROM memory

The Flash memory is ideal for single-supply applications allowing for field reprogramming without requiring external high voltage sources for program or erase operations. The Flash module includes a memory controller that executes commands to modify Flash memory contents. The user interface to the memory controller consists of the indexed Flash Common Command Object (FCCOB) register which is written to with the command, global address, data, and any required command parameters. The memory controller must complete the execution of a command before the FCCOB register can be written to with a new command.

CAUTION

A Flash word or phrase must be in the erased state before being programmed. Cumulative programming of bits within a Flash word or phrase is not allowed.

The Flash memory may be read as bytes and aligned words. Read access time is one bus cycle for bytes and aligned words. For misaligned words access, the CPU has to perform twice the byte read access command. For Flash memory, an erased bit reads 1 and a programmed bit reads 0.

It is possible to read from P-Flash memory while some commands are executing on EEPROM memory. It is not possible to read from EEPROM memory while a command is executing on P-Flash memory. Simultaneous P-Flash and EEPROM operations are discussed in Section 27.4.5.

Both P-Flash and EEPROM memories are implemented with Error Correction Codes (ECC) that can resolve single bit faults and detect double bit faults. For P-Flash memory, the ECC implementation requires that programming be done on an aligned 8 byte basis (a Flash phrase). Since P-Flash memory is always read by half-phrase, only one single bit fault in an aligned 4 byte half-phrase containing the byte or word accessed will be corrected.

27.1.1 Glossary

Command Write Sequence — An MCU instruction sequence to execute built-in algorithms (including program and erase) on the Flash memory.

EEPROM Memory — The EEPROM memory constitutes the nonvolatile memory store for data.

EEPROM Sector — The EEPROM sector is the smallest portion of the EEPROM memory that can be erased. The EEPROM sector consists of 4 bytes.

NVM Command Mode — An NVM mode using the CPU to setup the FCCOB register to pass parameters required for Flash command execution.

Phrase — An aligned group of four 16-bit words within the P-Flash memory. Each phrase includes two sets of aligned double words with each set including 7 ECC bits for single bit fault correction and double bit fault detection within each double word.

P-Flash Memory — The P-Flash memory constitutes the main nonvolatile memory store for applications.

P-Flash Sector — The P-Flash sector is the smallest portion of the P-Flash memory that can be erased. Each P-Flash sector contains 512 bytes.

Program IFR — Nonvolatile information register located in the P-Flash block that contains the Version ID, and the Program Once field.

27.1.2 Features

27.1.2.1 P-Flash Features

- 64 Kbytes of P-Flash memory composed of one 64 Kbyte Flash block divided into 128 sectors of 512 bytes
- Single bit fault correction and double bit fault detection within a 32-bit double word during read operations
- Automated program and erase algorithm with verify and generation of ECC parity bits

- Fast sector erase and phrase program operation
- Ability to read the P-Flash memory while programming a word in the EEPROM memory
- Flexible protection scheme to prevent accidental program or erase of P-Flash memory

27.1.2.2 EEPROM Features

- 2 Kbytes of EEPROM memory composed of one 2 Kbyte Flash block divided into 512 sectors of 4 bytes
- Single bit fault correction and double bit fault detection within a word during read operations
- Automated program and erase algorithm with verify and generation of ECC parity bits
- Fast sector erase and word program operation
- Protection scheme to prevent accidental program or erase of EEPROM memory
- Ability to program up to four words in a burst sequence

27.1.2.3 Other Flash Module Features

- No external high-voltage power supply required for Flash memory program and erase operations
- Interrupt generation on Flash command completion and Flash error detection
- Security mechanism to prevent unauthorized access to the Flash memory

27.1.3 Block Diagram

The block diagram of the Flash module is shown in Figure 27-1.

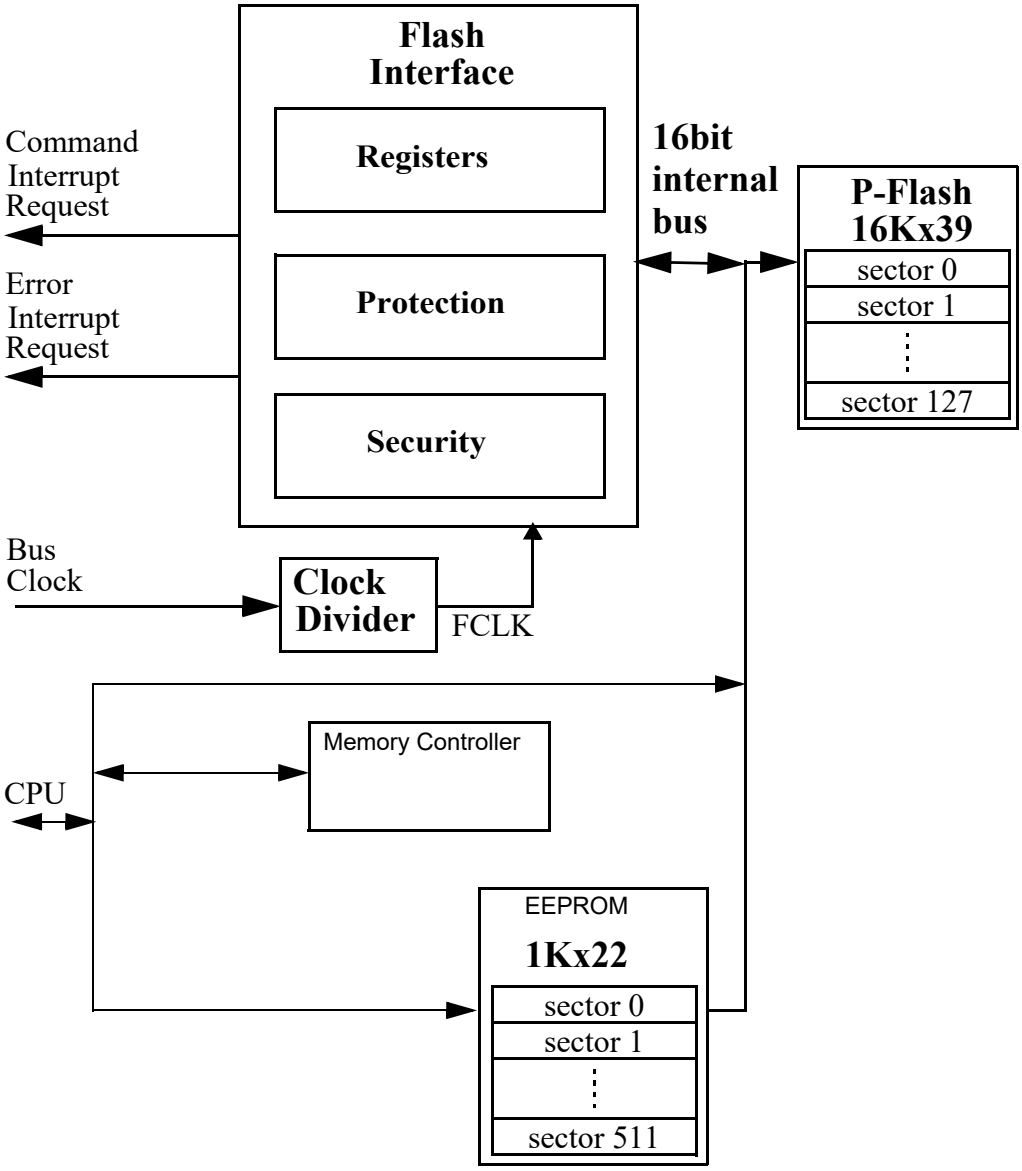

Figure 27-1. FTMRG64K1 Block Diagram

27.2 External Signal Description

The Flash module contains no signals that connect off-chip.

27.3 Memory Map and Registers

This section describes the memory map and registers for the Flash module. Read data from unimplemented memory space in the Flash module is undefined. Write access to unimplemented or reserved memory space in the Flash module will be ignored by the Flash module.

CAUTION

Writing to the Flash registers while a Flash command is executing (that is indicated when the value of flag CCIF reads as ’0’) is not allowed. If such action is attempted the write operation will not change the register value.

Writing to the Flash registers is allowed when the Flash is not busy executing commands (CCIF = 1) and during initialization right after reset, despite the value of flag CCIF in that case (refer to Section 27.6 for a complete description of the reset sequence).

.

Table 27-2. FTMRG Memory Map

Global Address (in Bytes)	Size (Bytes)	Description
0x0_0000 - 0x0_03FF	1,024	Register Space
0x0_0400 – 0x0_0BFF	2,048	EEPROM Memory
0x0_4000 – 0x0_7FFF	16,284	NVMRES[1]=1 : NVM Resource area (see Figure 27-3)
0x3_0000 – 0x3_FFFF	65,536	P-Flash Memory

[1] See NVMRES description in Section 27.4.3

27.3.1 Module Memory Map

The S12 architecture places the P-Flash memory between global addresses 0x3_0000 and 0x3_FFFF as shown in Table 27-3.The P-Flash memory map is shown in Figure 27-2.

Table 27-3. P-Flash Memory Addressing

Global Address	Size (Bytes)	Description
0x3_0000 – 0x3_FFFF	64 K	P-Flash Block Contains Flash Configuration Field (see Table 27-4)

The FPROT register, described in Section 27.3.2.9, can be set to protect regions in the Flash memory from accidental program or erase. Three separate memory regions, one growing upward from global address 0x3_8000 in the Flash memory (called the lower region), one growing downward from global address 0x3_FFFF in the Flash memory (called the higher region), and the remaining addresses in the Flash memory, can be activated for protection. The Flash memory addresses covered by these protectable regions are shown in the P-Flash memory map. The higher address region is mainly targeted to hold the boot loader code since it covers the vector space. Default protection settings as well as security information that allows the MCU to restrict access to the Flash module are stored in the Flash configuration field as described in Table 27-4.

Table 27-4. Flash Configuration Field

Global Address	Size (Bytes)	Description
0x3_FF00-0x3_FF07	8	Backdoor Comparison Key Refer to Section 27.4.6.11, “Verify Backdoor Access Key Command,” and Section 27.5.1, “Unsecuring the MCU using Backdoor Key Access”
0x3_FF08-0x3_FF0B[1]	4	Reserved
0x3_FF0C[1]	1	P-Flash Protection byte. Refer to Section 27.3.2.9, “P-Flash Protection Register (FPROT)”
0x3_FF0D[1]	1	EEPROM Protection byte. Refer to Section 27.3.2.10, “EEPROM Protection Register (EEPROT)”
0x3_FF0E[1]	1	Flash Nonvolatile byte Refer to Section 27.3.2.16, “Flash Option Register (FOPT)”
0x3_FF0F[1]	1	Flash Security byte Refer to Section 27.3.2.2, “Flash Security Register (FSEC)”

[1] 0x3FF08-0x3_FF0F form a Flash phrase and must be programmed in a single command write sequence. Each byte in the 0x3_FF08 - 0x3_FF0B reserved field should be programmed to 0xFF.

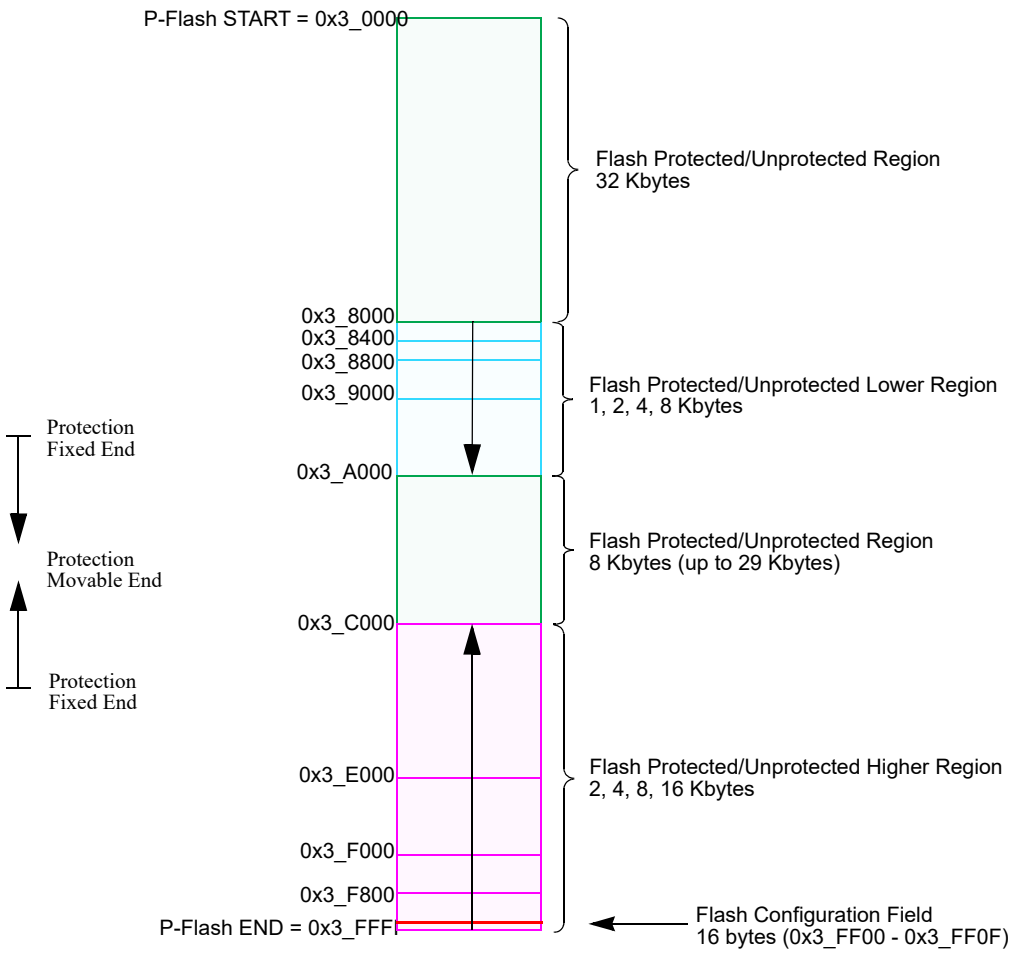

Figure 27-2. P-Flash Memory Map

Table 27-5. Program IFR Fields

Global Address	Size (Bytes)	Field Description
0x0_4000 – 0x0_4007	8	Reserved
0x0_4008 – 0x0_40B5	174	Reserved
0x0_40B6 – 0x0_40B7	2	Version ID[1]
0x0_40B8 – 0x0_40BF	8	Reserved
0x0_40C0 – 0x0_40FF	64	Program Once Field Refer to Section 27.4.6.6, “Program Once Command”

[1] Used to track firmware patch versions, see Section 27.4.2

Table 27-6. Memory Controller Resource Fields (NVMRES[1]=1)

Global Address	Size (Bytes)	Description
0x0_4000 – 0x040FF	256	P-Flash IFR (see Table 27-5)
0x0_4100 – 0x0_41FF	256	Reserved.
0x0_4200 – 0x0_57FF		Reserved
0x0_5800 – 0x0_59FF	512	Reserved
0x0_5A00 – 0x0_5FFF	1,536	Reserved
0x0_6000 – 0x0_6BFF	3,072	Reserved
0x0_6C00 – 0x0_7FFF	5,120	Reserved

1 NVMRES - See Section 27.4.3 for NVMRES (NVM Resource) detail.

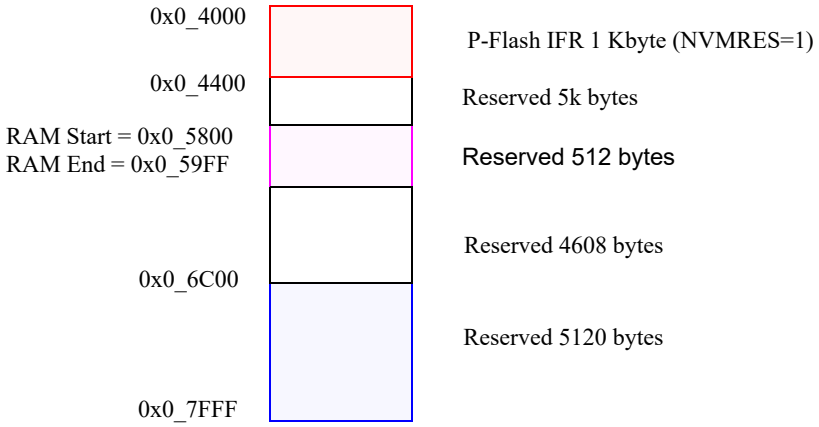

Figure 27-3. Memory Controller Resource Memory Map (NVMRES=1)

27.3.2 Register Descriptions

The Flash module contains a set of 20 control and status registers located between Flash module base + 0x0000 and 0x0013.

In the case of the writable registers, the write accesses are forbidden during Fash command execution (for more detail, see Caution note in Section 27.3).

A summary of the Flash module registers is given in Figure 27-4 with detailed descriptions in the following subsections.

Address & Name		7	6	5	4	3	2	1	0
0x0000 FCLKDIV	R	FDIVLD	FDIVLCK	FDIV5	FDIV4	FDIV3	FDIV2	FDIV1	FDIV0
	W								
0x0001 FSEC	R	KEYEN1	KEYEN0	RNV5	RNV4	RNV3	RNV2	SEC1	SEC0
	W								
0x0002 FCCOBIX	R	0	0	0	0	0	CCOBIX2	CCOBIX1	CCOBIX0
	W								
0x0003 FRSV0	R	0	0	0	0	0	0	0	0
	W								
0x0004 FCNFG	R	CCIE	0	0	IGNSF	0	0	FDFD	FSFD
	W								
0x0005 FERCNFG	R	0	0	0	0	0	0	DFDIE	SFDIE
	W								
0x0006 FSTAT	R	CCIF	0	ACCERR	FPVIOL	MGBUSY	RSVD	MGSTAT1	MGSTAT0
	W								
0x0007 FERSTAT	R	0	0	0	0	0	0	DFDIF	SFDIF
	W								
0x0008 FPROT	R	FPOPEN	RNV6	FPHDIS	FPHS1	FPHS0	FPLDIS	FPLS1	FPLS0
	W								
0x0009 EEPROT	R	DPOPEN	0	DPS5	DPS4	DPS3	DPS2	DPS1	DPS0
	W								
0x000A FCCOBHI	R	CCOB15	CCOB14	CCOB13	CCOB12	CCOB11	CCOB10	CCOB9	CCOB8
	W								
0x000B FCCOBLO	R	CCOB7	CCOB6	CCOB5	CCOB4	CCOB3	CCOB2	CCOB1	CCOB0
	W								
0x000C FRSV1	R	0	0	0	0	0	0	0	0
	W								

Figure 27-4. FTMRG64K1 Register Summary

Address & Name		7	6	5	4	3	2	1	0
0x000D FRSV2	R	0	0	0	0	0	0	0	0
	W								
0x000E FRSV3	R	0	0	0	0	0	0	0	0
	W								
0x000F FRSV4	R	0	0	0	0	0	0	0	0
	W								
0x0010 FOPT	R	NV7	NV6	NV5	NV4	NV3	NV2	NV1	NV0
	W								
0x0011 FRSV5	R	0	0	0	0	0	0	0	0
	W								
0x0012 FRSV6	R	0	0	0	0	0	0	0	0
	W								
0x0013 FRSV7	R	0	0	0	0	0	0	0	0
	W								

= Unimplemented or Reserved

Figure 27-4. FTMRG64K1 Register Summary (continued)

27.3.2.1 Flash Clock Divider Register (FCLKDIV)

The FCLKDIV register is used to control timed events in program and erase algorithms.

Offset Module Base + 0x0000

	7	6	5	4	3	2	1	0
R	FDIVLD	FDIVLCK	FDIV[5:0]					
W								
Reset	0	0	0	0	0	0	0	0

= Unimplemented or Reserved

Figure 27-5. Flash Clock Divider Register (FCLKDIV)

All bits in the FCLKDIV register are readable, bit 7 is not writable, bit 6 is write-once-hi and controls the writability of the FDIV field in normal mode. In special mode, bits 6-0 are writable any number of times but bit 7 remains unwritable.

CAUTION

The FCLKDIV register should never be written while a Flash command is executing (CCIF=0).

Table 27-7. FCLKDIV Field Descriptions

Field	Description
7 FDIVLD	Clock Divider Loaded 0 FCLKDIV register has not been written since the last reset 1 FCLKDIV register has been written since the last reset
6 FDIVLCK	Clock Divider Locked 0 FDIV field is open for writing 1 FDIV value is locked and cannot be changed. Once the lock bit is set high, only reset can clear this bit and restore writability to the FDIV field in normal mode.
5–0 FDIV[5:0]	**Clock Divider Bits** — FDIV[5:0] must be set to effectively divide BUSCLK down to 1 MHz to control timed events during Flash program and erase algorithms. Table 27-8 shows recommended values for FDIV[5:0] based on the BUSCLK frequency. Please refer to Section 27.4.4, “Flash Command Operations,” for more information.

Table 27-8. FDIV values for various BUSCLK Frequencies

BUSCLK Frequency (MHz)		FDIV[5:0]	BUSCLK Frequency (MHz)		FDIV[5:0]
MIN[1]	MAX[2]		MIN[1]	MAX[2]	
1.0	1.6	0x00	16.6	17.6	0x10
1.6	2.6	0x01	17.6	18.6	0x11
2.6	3.6	0x02	18.6	19.6	0x12
3.6	4.6	0x03	19.6	20.6	0x13
4.6	5.6	0x04	20.6	21.6	0x14
5.6	6.6	0x05	21.6	22.6	0x15
6.6	7.6	0x06	22.6	23.6	0x16
7.6	8.6	0x07	23.6	24.6	0x17
8.6	9.6	0x08	24.6	25.6	0x18
9.6	10.6	0x09			
10.6	11.6	0x0A			
11.6	12.6	0x0B			
12.6	13.6	0x0C			
13.6	14.6	0x0D			
14.6	15.6	0x0E			
15.6	16.6	0x0F			

1 BUSCLK is Greater Than this value.

2 BUSCLK is Less Than or Equal to this value.

27.3.2.2 Flash Security Register (FSEC)

The FSEC register holds all bits associated with the security of the MCU and Flash module.

Offset Module Base + 0x0001

	7	6	5	4	3	2	1	0
R	KEYEN[1:0]		RNV[5:2]				SEC[1:0]	
W								
Reset	F[1]	F[1]	F[1]	F[1]	F[1]	F[1]	F[1]	F[1]

= Unimplemented or Reserved

Figure 27-6. Flash Security Register (FSEC)

1 Loaded from IFR Flash configuration field, during reset sequence.

All bits in the FSEC register are readable but not writable.

During the reset sequence, the FSEC register is loaded with the contents of the Flash security byte in the Flash configuration field at global address 0x3_FF0F located in P-Flash memory (see Table 27-4) as indicated by reset condition F in Figure 27-6. If a double bit fault is detected while reading the P-Flash phrase containing the Flash security byte during the reset sequence, all bits in the FSEC register will be set to leave the Flash module in a secured state with backdoor key access disabled.

Table 27-9. FSEC Field Descriptions

Field	Description
7–6 KEYEN[1:0]	**Backdoor Key Security Enable Bits** — The KEYEN[1:0] bits define the enabling of backdoor key access to the Flash module as shown in Table 27-10.
5–2 RNV[5:2]	**Reserved Nonvolatile Bits** — The RNV bits should remain in the erased state for future enhancements.
1–0 SEC[1:0]	**Flash Security Bits** — The SEC[1:0] bits define the security state of the MCU as shown in Table 27-11. If the Flash module is unsecured using backdoor key access, the SEC bits are forced to 10.

Table 27-10. Flash KEYEN States

KEYEN[1:0]	Status of Backdoor Key Access
00	DISABLED
01	DISABLED[1]
10	ENABLED
11	DISABLED

1 Preferred KEYEN state to disable backdoor key access.

Table 27-11. Flash Security States

SEC[1:0]	Status of Security
00	SECURED
01	SECURED[1]
10	UNSECURED
11	SECURED

1 Preferred SEC state to set MCU to secured state.

The security function in the Flash module is described in Section 27.5.

27.3.2.3 Flash CCOB Index Register (FCCOBIX)

The FCCOBIX register is used to index the FCCOB register for Flash memory operations.

Offset Module Base + 0x0002

	7	6	5	4	3	2	1	0
R	0	0	0	0	0	CCOBIX[2:0]		
W								
Reset	0	0	0	0	0	0	0	0

= Unimplemented or Reserved

Figure 27-7. FCCOB Index Register (FCCOBIX)

CCOBIX bits are readable and writable while remaining bits read 0 and are not writable.

Table 27-12. FCCOBIX Field Descriptions

Field	Description
2–0 CCOBIX[1:0]	**Common Command Register Index**— The CCOBIX bits are used to select which word of the FCCOB register array is being read or written to. See 27.3.2.11 Flash Common Command Object Register (FCCOB),” for more details.

27.3.2.4 Flash Reserved0 Register (FRSV0)

This Flash register is reserved for factory testing.

Offset Module Base + 0x000C

	7	6	5	4	3	2	1	0
R	0	0	0	0	0	0	0	0
W								
Reset	0	0	0	0	0	0	0	0

= Unimplemented or Reserved

Figure 27-8. Flash Reserved0 Register (FRSV0)

All bits in the FRSV0 register read 0 and are not writable.

27.3.2.5 Flash Configuration Register (FCNFG)

The FCNFG register enables the Flash command complete interrupt and forces ECC faults on Flash array read access from the CPU.

Offset Module Base + 0x0004

	7	6	5	4	3	2	1	0
R	CCIE	0	0	IGNSF	0	0	FDFD	FSFD
W								
Reset	0	0	0	0	0	0	0	0

= Unimplemented or Reserved

Figure 27-9. Flash Configuration Register (FCNFG)

CCIE, IGNSF, FDFD, and FSFD bits are readable and writable while remaining bits read 0 and are not writable.

Table 27-13. FCNFG Field Descriptions

Field	Description
7 CCIE	**Command Complete Interrupt Enable** — The CCIE bit controls interrupt generation when a Flash command has completed. 0 Command complete interrupt disabled 1 An interrupt will be requested whenever the CCIF flag in the FSTAT register is set (see Section 27.3.2.7)
4 IGNSF	**Ignore Single Bit Fault** — The IGNSF controls single bit fault reporting in the FERSTAT register (see Section 27.3.2.8). 0 All single bit faults detected during array reads are reported 1 Single bit faults detected during array reads are not reported and the single bit fault interrupt will not be generated
1 FDFD	**Force Double Bit Fault Detect** — The FDFD bit allows the user to simulate a double bit fault during Flash array read operations and check the associated interrupt routine. The FDFD bit is cleared by writing a 0 to FDFD. 0 Flash array read operations will set the DFDIF flag in the FERSTAT register only if a double bit fault is detected 1 Any Flash array read operation will force the DFDIF flag in the FERSTAT register to be set (see Section 27.3.2.7) and an interrupt will be generated as long as the DFDIE interrupt enable in the FERCNFG register is set (see Section 27.3.2.6)
0 FSFD	**Force Single Bit Fault Detect** — The FSFD bit allows the user to simulate a single bit fault during Flash array read operations and check the associated interrupt routine. The FSFD bit is cleared by writing a 0 to FSFD. 0 Flash array read operations will set the SFDIF flag in the FERSTAT register only if a single bit fault is detected 1 Flash array read operation will force the SFDIF flag in the FERSTAT register to be set (see Section 27.3.2.7) and an interrupt will be generated as long as the SFDIE interrupt enable in the FERCNFG register is set (see Section 27.3.2.6)

27.3.2.6 Flash Error Configuration Register (FERCNFG)

The FERCNFG register enables the Flash error interrupts for the FERSTAT flags.

Offset Module Base + 0x0005

	7	6	5	4	3	2	1	0
R	0	0	0	0	0	0	DFDIE	SFDIE
W								
Reset	0	0	0	0	0	0	0	0

= Unimplemented or Reserved

Figure 27-10. Flash Error Configuration Register (FERCNFG)

All assigned bits in the FERCNFG register are readable and writable.

Table 27-14. FERCNFG Field Descriptions

Field	Description
1 DFDIE	**Double Bit Fault Detect Interrupt Enable** — The DFDIE bit controls interrupt generation when a double bit fault is detected during a Flash block read operation. 0 DFDIF interrupt disabled 1 An interrupt will be requested whenever the DFDIF flag is set (see Section 27.3.2.8)
0 SFDIE	**Single Bit Fault Detect Interrupt Enable** — The SFDIE bit controls interrupt generation when a single bit fault is detected during a Flash block read operation. 0 SFDIF interrupt disabled whenever the SFDIF flag is set (see Section 27.3.2.8) 1 An interrupt will be requested whenever the SFDIF flag is set (see Section 27.3.2.8)

27.3.2.7 Flash Status Register (FSTAT)

The FSTAT register reports the operational status of the Flash module.

Offset Module Base + 0x0006

	7	6	5	4	3	2	1	0
R	CCIF	0	ACCERR	FPVIOL	MGBUSY	RSVD	MGSTAT[1:0]	
W								
Reset	1	0	0	0	0	0	0[1]	0[1]

= Unimplemented or Reserved

Figure 27-11. Flash Status Register (FSTAT)

[1] Reset value can deviate from the value shown if a double bit fault is detected during the reset sequence (see Section 27.6).

CCIF, ACCERR, and FPVIOL bits are readable and writable, MGBUSY and MGSTAT bits are readable but not writable, while remaining bits read 0 and are not writable.

Table 27-15. FSTAT Field Descriptions

Field	Description
7 CCIF	**Command Complete Interrupt Flag** — The CCIF flag indicates that a Flash command has completed. The CCIF flag is cleared by writing a 1 to CCIF to launch a command and CCIF will stay low until command completion or command violation. 0 Flash command in progress 1 Flash command has completed
5 ACCERR	**Flash Access Error Flag** — The ACCERR bit indicates an illegal access has occurred to the Flash memory caused by either a violation of the command write sequence (see Section 27.4.4.2) or issuing an illegal Flash command. While ACCERR is set, the CCIF flag cannot be cleared to launch a command. The ACCERR bit is cleared by writing a 1 to ACCERR. Writing a 0 to the ACCERR bit has no effect on ACCERR. 0 No access error detected 1 Access error detected
4 FPVIOL	**Flash Protection Violation Flag** —The FPVIOL bit indicates an attempt was made to program or erase an address in a protected area of P-Flash or EEPROM memory during a command write sequence. The FPVIOL bit is cleared by writing a 1 to FPVIOL. Writing a 0 to the FPVIOL bit has no effect on FPVIOL. While FPVIOL is set, it is not possible to launch a command or start a command write sequence. 0 No protection violation detected 1 Protection violation detected
3 MGBUSY	**Memory Controller Busy Flag** — The MGBUSY flag reflects the active state of the Memory Controller. 0 Memory Controller is idle 1 Memory Controller is busy executing a Flash command (CCIF = 0)
2 RSVD	**Reserved Bit** — This bit is reserved and always reads 0.
1–0 MGSTAT[1:0]	**Memory Controller Command Completion Status Flag** — One or more MGSTAT flag bits are set if an error is detected during execution of a Flash command or during the Flash reset sequence. See Section 27.4.6, “Flash Command Description,” and Section 27.6, “Initialization” for details.

27.3.2.8 Flash Error Status Register (FERSTAT)

The FERSTAT register reflects the error status of internal Flash operations.

Offset Module Base + 0x0007

	7	6	5	4	3	2	1	0
R	0	0	0	0	0	0	DFDIF	SFDIF
W								
Reset	0	0	0	0	0	0	0	0

= Unimplemented or Reserved

Figure 27-12. Flash Error Status Register (FERSTAT)

All flags in the FERSTAT register are readable and only writable to clear the flag.

Table 27-16. FERSTAT Field Descriptions

Field	Description
1 DFDIF	**Double Bit Fault Detect Interrupt Flag** — The setting of the DFDIF flag indicates that a double bit fault was detected in the stored parity and data bits during a Flash array read operation or that a Flash array read operation returning invalid data was attempted on a Flash block that was under a Flash command operation.[1] The DFDIF flag is cleared by writing a 1 to DFDIF. Writing a 0 to DFDIF has no effect on DFDIF.[2] 0 No double bit fault detected 1 Double bit fault detected or a Flash array read operation returning invalid data was attempted while command running
0 SFDIF	**Single Bit Fault Detect Interrupt Flag** — With the IGNSF bit in the FCNFG register clear, the SFDIF flag indicates that a single bit fault was detected in the stored parity and data bits during a Flash array read operation or that a Flash array read operation returning invalid data was attempted on a Flash block that was under a Flash command operation.[1] The SFDIF flag is cleared by writing a 1 to SFDIF. Writing a 0 to SFDIF has no effect on SFDIF. 0 No single bit fault detected 1 Single bit fault detected and corrected or a Flash array read operation returning invalid data was attempted while command running

1 The single bit fault and double bit fault flags are mutually exclusive for parity errors (an ECC fault occurrence can be either single fault or double fault but never both). A simultaneous access collision (Flash array read operation returning invalid data attempted while command running) is indicated when both SFDIF and DFDIF flags are high.

2 There is a one cycle delay in storing the ECC DFDIF and SFDIF fault flags in this register. At least one NOP is required after a flash memory read before checking FERSTAT for the occurrence of ECC errors.

27.3.2.9 P-Flash Protection Register (FPROT)

The FPROT register defines which P-Flash sectors are protected against program and erase operations.

Offset Module Base + 0x0008

	7	6	5	4	3	2	1	0
R	FPOPEN	RNV6	FPHDIS	FPHS[1:0]		FPLDIS	FPLS[1:0]	
W								
Reset	F[1]	F[1]	F[1]	F[1]	F[1]	F[1]	F[1]	F[1]

= Unimplemented or Reserved

Figure 27-13. Flash Protection Register (FPROT)

1 Loaded from IFR Flash configuration field, during reset sequence.

The (unreserved) bits of the FPROT register are writable with the restriction that the size of the protected region can only be increased (see Section 27.3.2.9.1, “P-Flash Protection Restrictions,” and Table 27-21).

During the reset sequence, the FPROT register is loaded with the contents of the P-Flash protection byte in the Flash configuration field at global address 0x3_FF0C located in P-Flash memory (see Table 27-4) as indicated by reset condition ‘F’ in Figure 27-13. To change the P-Flash protection that will be loaded during the reset sequence, the upper sector of the P-Flash memory must be unprotected, then the P-Flash protection byte must be reprogrammed. If a double bit fault is detected while reading the P-Flash phrase containing the P-Flash protection byte during the reset sequence, the FPOPEN bit will be cleared and remaining bits in the FPROT register will be set to leave the P-Flash memory fully protected.

Trying to alter data in any protected area in the P-Flash memory will result in a protection violation error and the FPVIOL bit will be set in the FSTAT register. The block erase of a P-Flash block is not possible if any of the P-Flash sectors contained in the same P-Flash block are protected.

Table 27-17. FPROT Field Descriptions

Field	Description
7 FPOPEN	**Flash Protection Operation Enable** — The FPOPEN bit determines the protection function for program or erase operations as shown in Table 27-18 for the P-Flash block. 0 When FPOPEN is clear, the FPHDIS and FPLDIS bits define unprotected address ranges as specified by the corresponding FPHS and FPLS bits 1 When FPOPEN is set, the FPHDIS and FPLDIS bits enable protection for the address range specified by the corresponding FPHS and FPLS bits
6 RNV[6]	**Reserved Nonvolatile Bit** — The RNV bit should remain in the erased state for future enhancements.
5 FPHDIS	**Flash Protection Higher Address Range Disable** — The FPHDIS bit determines whether there is a protected/unprotected area in a specific region of the P-Flash memory ending with global address 0x3_FFFF. 0 Protection/Unprotection enabled 1 Protection/Unprotection disabled
4–3 FPHS[1:0]	**Flash Protection Higher Address Size** — The FPHS bits determine the size of the protected/unprotected area in P-Flash memory as shown inTable 27-19. The FPHS bits can only be written to while the FPHDIS bit is set.
2 FPLDIS	**Flash Protection Lower Address Range Disable** — The FPLDIS bit determines whether there is a protected/unprotected area in a specific region of the P-Flash memory beginning with global address 0x3_8000. 0 Protection/Unprotection enabled 1 Protection/Unprotection disabled
1–0 FPLS[1:0]	**Flash Protection Lower Address Size** — The FPLS bits determine the size of the protected/unprotected area in P-Flash memory as shown in Table 27-20. The FPLS bits can only be written to while the FPLDIS bit is set.

Table 27-18. P-Flash Protection Function

FPOPEN	FPHDIS	FPLDIS	Function[1]
1	1	1	No P-Flash Protection
1	1	0	Protected Low Range
1	0	1	Protected High Range
1	0	0	Protected High and Low Ranges
0	1	1	Full P-Flash Memory Protected
0	1	0	Unprotected Low Range
0	0	1	Unprotected High Range
0	0	0	Unprotected High and Low Ranges

[1] For range sizes, refer to Table 27-19 and Table 27-20.

Table 27-19. P-Flash Protection Higher Address Range

FPHS[1:0]	Global Address Range	Protected Size
00	0x3_F800–0x3_FFFF	2 Kbytes
01	0x3_F000–0x3_FFFF	4 Kbytes
10	0x3_E000–0x3_FFFF	8 Kbytes
11	0x3_C000–0x3_FFFF	16 Kbytes

Table 27-20. P-Flash Protection Lower Address Range

FPLS[1:0]	Global Address Range	Protected Size
00	0x3_8000–0x3_83FF	1 Kbyte
01	0x3_8000–0x3_87FF	2 Kbytes
10	0x3_8000–0x3_8FFF	4 Kbytes
11	0x3_8000–0x3_9FFF	8 Kbytes

All possible P-Flash protection scenarios are shown in Figure 27-14 . Although the protection scheme is loaded from the Flash memory at global address 0x3_FF0C during the reset sequence, it can be changed by the user. The P-Flash protection scheme can be used by applications requiring reprogramming in single chip mode while providing as much protection as possible if reprogramming is not required.

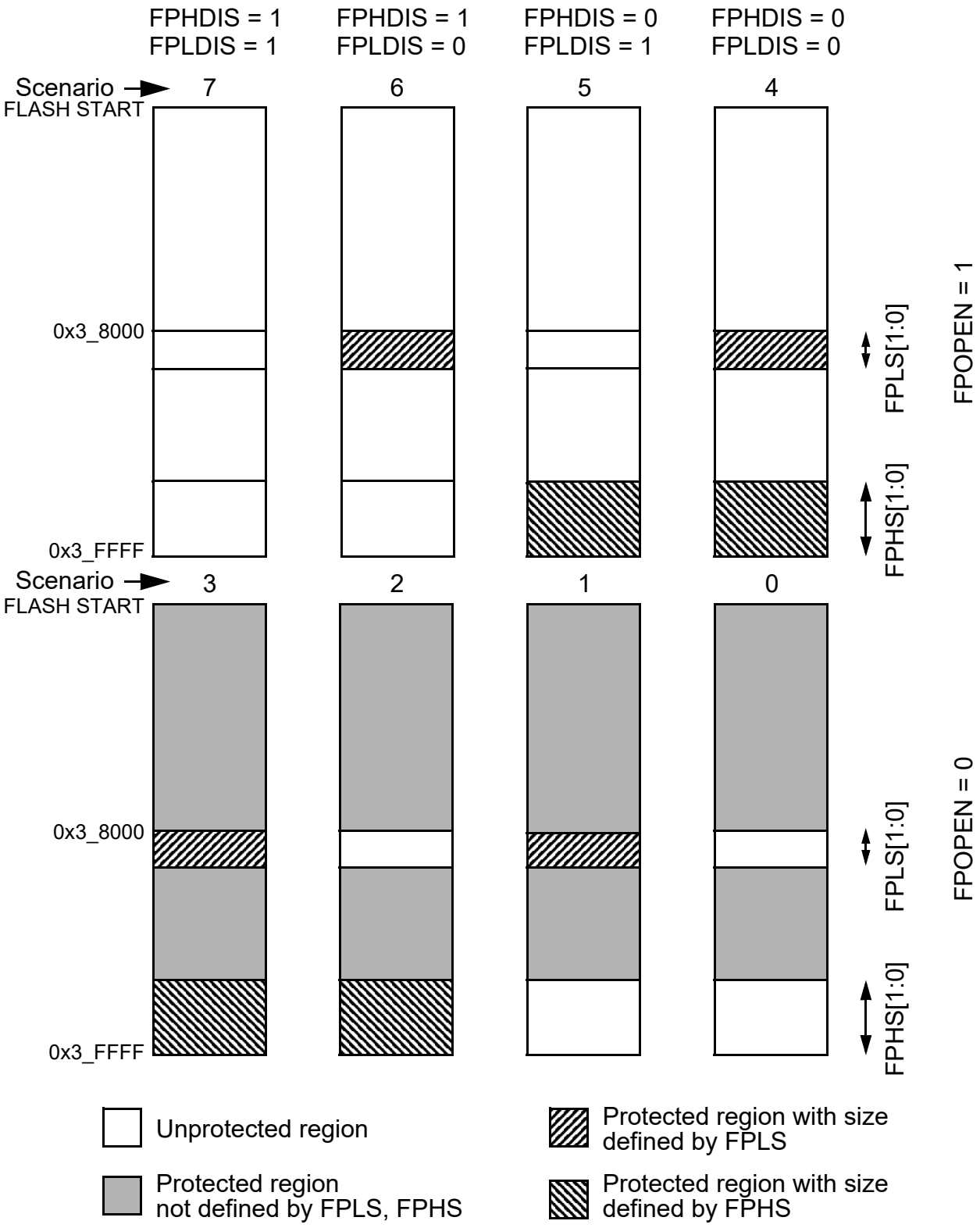

Figure 27-14. P-Flash Protection Scenarios

27.3.2.9.1 P-Flash Protection Restrictions

The general guideline is that P-Flash protection can only be added and not removed. Table 27-21 specifies all valid transitions between P-Flash protection scenarios. Any attempt to write an invalid scenario to the FPROT register will be ignored. The contents of the FPROT register reflect the active protection scenario. See the FPHS and FPLS bit descriptions for additional restrictions.

Table 27-21. P-Flash Protection Scenario Transitions

From Protection Scenario	To Protection Scenario[1]							
	0	1	2	3	4	5	6	7
0	X	X	X	X				
1		X		X				
2			X	X				
3				X				
4				X	X			
5			X	X	X	X		
6		X		X	X		X	
7	X	X	X	X	X	X	X	X

1 Allowed transitions marked with X, see Figure 27-14 for a definition of the scenarios.

27.3.2.10 EEPROM Protection Register (EEPROT)

The EEPROT register defines which EEPROM sectors are protected against program and erase operations.

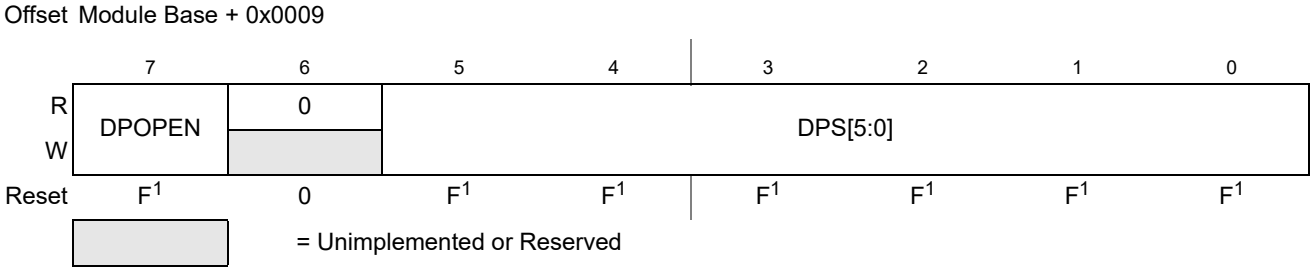

Figure 27-15. EEPROM Protection Register (EEPROT)

1 Loaded from IFR Flash configuration field, during reset sequence.

The (unreserved) bits of the EEPROT register are writable with the restriction that protection can be added but not removed. Writes must increase the DPS value and the DPOPEN bit can only be written from 1 (protection disabled) to 0 (protection enabled). If the DPOPEN bit is set, the state of the DPS bits is irrelevant.

During the reset sequence, fields DPOPEN and DPS of the EEPROT register are loaded with the contents of the EEPROM protection byte in the Flash configuration field at global address 0x3_FF0D located in P-Flash memory (see Table 27-4) as indicated by reset condition F in Table 27-23. To change the EEPROM protection that will be loaded during the reset sequence, the P-Flash sector containing the EEPROM protection byte must be unprotected, then the EEPROM protection byte must be programmed. If a double bit fault is detected while reading the P-Flash phrase containing the EEPROM protection byte during the reset sequence, the DPOPEN bit will be cleared and DPS bits will be set to leave the EEPROM memory fully protected.

Trying to alter data in any protected area in the EEPROM memory will result in a protection violation error and the FPVIOL bit will be set in the FSTAT register. Block erase of the EEPROM memory is not possible if any of the EEPROM sectors are protected.

Table 27-22. EEPROT Field Descriptions

Field	Description
7 DPOPEN	EEPROM Protection Control 0 Enables EEPROM memory protection from program and erase with protected address range defined by DPS bits 1 Disables EEPROM memory protection from program and erase
5–0 DPS[5:0]	**EEPROM Protection Size** — The DPS[5:0] bits determine the size of the protected area in the EEPROM memory as shown in Table 27-23 .

Table 27-23. EEPROM Protection Address Range

DPS[5:0]	Global Address Range	Protected Size
000000	0x0_0400 – 0x0_041F	32 bytes
000001	0x0_0400 – 0x0_043F	64 bytes
000010	0x0_0400 – 0x0_045F	96 bytes
000011	0x0_0400 – 0x0_047F	128 bytes
000100	0x0_0400 – 0x0_049F	160 bytes
000101	0x0_0400 – 0x0_04BF	192 bytes
The Protection Size goes on enlarging in step of 32 bytes, for each DPS value increasing of one. . . .		
111111	0x0_0400 – 0x0_0BFF	2,048 bytes

27.3.2.11 Flash Common Command Object Register (FCCOB)

The FCCOB is an array of six words addressed via the CCOBIX index found in the FCCOBIX register. Byte wide reads and writes are allowed to the FCCOB register.

Offset Module Base + 0x000A

	7	6	5	4	3	2	1	0
R W	CCOB[15:8]							
Reset	0	0	0	0	0	0	0	0

Figure 27-16. Flash Common Command Object High Register (FCCOBHI)

Offset Module Base + 0x000B

	7	6	5	4	3	2	1	0
R W	CCOB[7:0]							
Reset	0	0	0	0	0	0	0	0

Figure 27-17. Flash Common Command Object Low Register (FCCOBLO)

27.3.2.11.1 FCCOB - NVM Command Mode

NVM command mode uses the indexed FCCOB register to provide a command code and its relevant parameters to the Memory Controller. The user first sets up all required FCCOB fields and then initiates the command's execution by writing a 1 to the CCIF bit in the FSTAT register (a 1 written by the user clears the CCIF command completion flag to 0). When the user clears the CCIF bit in the FSTAT register all FCCOB parameter fields are locked and cannot be changed by the user until the command completes (as evidenced by the Memory Controller returning CCIF to 1). Some commands return information to the FCCOB register array.

The generic format for the FCCOB parameter fields in NVM command mode is shown in Table 27-24. The return values are available for reading after the CCIF flag in the FSTAT register has been returned to 1 by the Memory Controller. Writes to the unimplemented parameter fields (CCOBIX = 110 and CCOBIX = 111) are ignored with reads from these fields returning 0x0000.

Table 27-24 shows the generic Flash command format. The high byte of the first word in the CCOB array contains the command code, followed by the parameters for this specific Flash command. For details on the FCCOB settings required by each command, see the Flash command descriptions in Section 27.4.6.

Table 27-24. FCCOB - NVM Command Mode (Typical Usage)

CCOBIX[2:0]	Byte	FCCOB Parameter Fields (NVM Command Mode)
000	HI	FCMD[7:0] defining Flash command
	LO	6'h0, Global address [17:16]
001	HI	Global address [15:8]
	LO	Global address [7:0]

Table 27-24. FCCOB - NVM Command Mode (Typical Usage)

CCOBIX[2:0]	Byte	FCCOB Parameter Fields (NVM Command Mode)
010	HI	Data 0 [15:8]
	LO	Data 0 [7:0]
011	HI	Data 1 [15:8]
	LO	Data 1 [7:0]
100	HI	Data 2 [15:8]
	LO	Data 2 [7:0]
101	HI	Data 3 [15:8]
	LO	Data 3 [7:0]

27.3.2.12 Flash Reserved1 Register (FRSV1)

This Flash register is reserved for factory testing.

Offset Module Base + 0x000C

	7	6	5	4	3	2	1	0
R	0	0	0	0	0	0	0	0
W								
Reset	0	0	0	0	0	0	0	0

= Unimplemented or Reserved

Figure 27-18. Flash Reserved1 Register (FRSV1)

All bits in the FRSV1 register read 0 and are not writable.

27.3.2.13 Flash Reserved2 Register (FRSV2)

This Flash register is reserved for factory testing.

Offset Module Base + 0x000D

	7	6	5	4	3	2	1	0
R	0	0	0	0	0	0	0	0
W								
Reset	0	0	0	0	0	0	0	0

= Unimplemented or Reserved

Figure 27-19. Flash Reserved2 Register (FRSV2)

All bits in the FRSV2 register read 0 and are not writable.

27.3.2.14 Flash Reserved3 Register (FRSV3)

This Flash register is reserved for factory testing.

Offset Module Base + 0x000E

	7	6	5	4	3	2	1	0
R	0	0	0	0	0	0	0	0
W								
Reset	0	0	0	0	0	0	0	0

= Unimplemented or Reserved

Figure 27-20. Flash Reserved3 Register (FRSV3)

All bits in the FRSV3 register read 0 and are not writable.

27.3.2.15 Flash Reserved4 Register (FRSV4)

This Flash register is reserved for factory testing.

Offset Module Base + 0x000F

	7	6	5	4	3	2	1	0
R	0	0	0	0	0	0	0	0
W								
Reset	0	0	0	0	0	0	0	0

= Unimplemented or Reserved

Figure 27-21. Flash Reserved4 Register (FRSV4)

All bits in the FRSV4 register read 0 and are not writable.

27.3.2.16 Flash Option Register (FOPT)

The FOPT register is the Flash option register.

Offset Module Base + 0x0010

	7	6	5	4	3	2	1	0
R	NV[7:0]							
W								
Reset	F[1]	F[1]	F[1]	F[1]	F[1]	F[1]	F[1]	F[1]

= Unimplemented or Reserved

Figure 27-22. Flash Option Register (FOPT)

1 Loaded from IFR Flash configuration field, during reset sequence.

All bits in the FOPT register are readable but are not writable.

During the reset sequence, the FOPT register is loaded from the Flash nonvolatile byte in the Flash configuration field at global address 0x3_FF0E located in P-Flash memory (see Table 27-4) as indicated by reset condition F in Figure 27-22. If a double bit fault is detected while reading the P-Flash phrase containing the Flash nonvolatile byte during the reset sequence, all bits in the FOPT register will be set.

Table 27-25. FOPT Field Descriptions

Field	Description
7–0 NV[7:0]	**Nonvolatile Bits** — The NV[7:0] bits are available as nonvolatile bits. Refer to the device user guide for proper use of the NV bits.

27.3.2.17 Flash Reserved5 Register (FRSV5)

This Flash register is reserved for factory testing.

Offset Module Base + 0x0011

	7	6	5	4	3	2	1	0
R	0	0	0	0	0	0	0	0
W								
Reset	0	0	0	0	0	0	0	0

= Unimplemented or Reserved

Figure 27-23. Flash Reserved5 Register (FRSV5)

All bits in the FRSV5 register read 0 and are not writable.

27.3.2.18 Flash Reserved6 Register (FRSV6)

This Flash register is reserved for factory testing.

Offset Module Base + 0x0012

	7	6	5	4	3	2	1	0
R	0	0	0	0	0	0	0	0
W								
Reset	0	0	0	0	0	0	0	0

= Unimplemented or Reserved

Figure 27-24. Flash Reserved6 Register (FRSV6)

All bits in the FRSV6 register read 0 and are not writable.

27.3.2.19 Flash Reserved7 Register (FRSV7)

This Flash register is reserved for factory testing.

Offset Module Base + 0x0013

	7	6	5	4	3	2	1	0
R	0	0	0	0	0	0	0	0
W								
Reset	0	0	0	0	0	0	0	0

= Unimplemented or Reserved

Figure 27-25. Flash Reserved7 Register (FRSV7)

All bits in the FRSV7 register read 0 and are not writable.

27.4 Functional Description

27.4.1 Modes of Operation

The FTMRG64K1 module provides the modes of operation normal and special . The operating mode is determined by module-level inputs and affects the FCLKDIV, FCNFG, and EEPROT registers (see Table 27-27).

27.4.2 IFR Version ID Word

The version ID word is stored in the IFR at address 0x0_40B6. The contents of the word are defined in Table 27-26.

Table 27-26. IFR Version ID Fields

[15:4]	[3:0]
Reserved	VERNUM

- VERNUM: Version number. The first version is number 0b_0001 with both 0b_0000 and 0b_1111 meaning ‘none’.

27.4.3 Internal NVM resource (NVMRES)

IFR is an internal NVM resource readable by CPU , when NVMRES is active. The IFR fields are shown in Table 27-5.

The NVMRES global address map is shown in Table 27-6.

27.4.4 Flash Command Operations

Flash command operations are used to modify Flash memory contents.

The next sections describe:

- How to write the FCLKDIV register that is used to generate a time base (FCLK) derived from BUSCLK for Flash program and erase command operations
- The command write sequence used to set Flash command parameters and launch execution
- Valid Flash commands available for execution, according to MCU functional mode and MCU security state.

27.4.4.1 Writing the FCLKDIV Register

Prior to issuing any Flash program or erase command after a reset, the user is required to write the FCLKDIV register to divide BUSCLK down to a target FCLK of 1 MHz. Table 27-8 shows recommended values for the FDIV field based on BUSCLK frequency.

NOTE

Programming or erasing the Flash memory cannot be performed if the bus clock runs at less than 0.8 MHz. Setting FDIV too high can destroy the Flash memory due to overstress. Setting FDIV too low can result in incomplete programming or erasure of the Flash memory cells.

When the FCLKDIV register is written, the FDIVLD bit is set automatically. If the FDIVLD bit is 0, the FCLKDIV register has not been written since the last reset. If the FCLKDIV register has not been written, any Flash program or erase command loaded during a command write sequence will not execute and the ACCERR bit in the FSTAT register will set.

27.4.4.2 Command Write Sequence

The Memory Controller will launch all valid Flash commands entered using a command write sequence.

Before launching a command, the ACCERR and FPVIOL bits in the FSTAT register must be clear (see Section 27.3.2.7) and the CCIF flag should be tested to determine the status of the current command write sequence. If CCIF is 0, the previous command write sequence is still active, a new command write sequence cannot be started, and all writes to the FCCOB register are ignored.

27.4.4.2.1 Define FCCOB Contents

The FCCOB parameter fields must be loaded with all required parameters for the Flash command being executed. Access to the FCCOB parameter fields is controlled via the CCOBIX bits in the FCCOBIX register (see Section 27.3.2.3).

The contents of the FCCOB parameter fields are transferred to the Memory Controller when the user clears the CCIF command completion flag in the FSTAT register (writing 1 clears the CCIF to 0). The CCIF flag will remain clear until the Flash command has completed. Upon completion, the Memory Controller will return CCIF to 1 and the FCCOB register will be used to communicate any results. The flow for a generic command write sequence is shown in Figure 27-26.

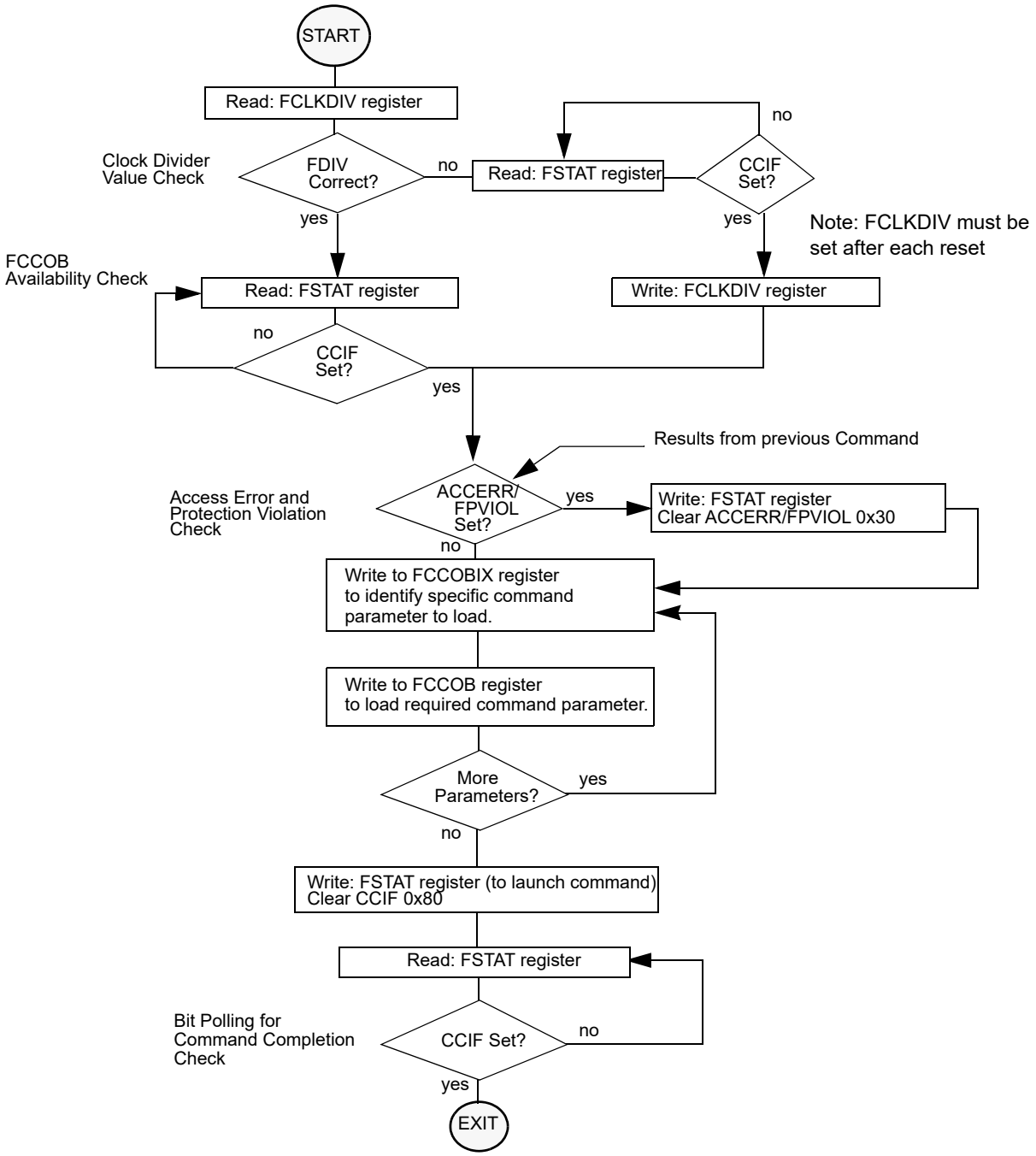

Figure 27-26. Generic Flash Command Write Sequence Flowchart

27.4.4.3 Valid Flash Module Commands

Table 27-27 present the valid Flash commands, as enabled by the combination of the functional MCU mode (Normal SingleChip NS, Special Singlechip SS) with the MCU security state (Unsecured, Secured).

Special Singlechip mode is selected by input mmc_ss_mode_ts2 asserted. MCU Secured state is selected by input mmc_secure input asserted.

Table 27-27. Flash Commands by Mode and Security State

FCMD	Command	Unsecured		Secured	
		NS[1]	SS[2]	NS[3]	SS[4]
0x01	Erase Verify All Blocks	*	*	*	*
0x02	Erase Verify Block	*	*	*	*
0x03	Erase Verify P-Flash Section	*	*	*	
0x04	Read Once	*	*	*	
0x06	Program P-Flash	*	*	*	
0x07	Program Once	*	*	*	
0x08	Erase All Blocks		*		*
0x09	Erase Flash Block	*	*	*	
0x0A	Erase P-Flash Sector	*	*	*	
0x0B	Unsecure Flash		*		*
0x0C	Verify Backdoor Access Key	*		*	
0x0D	Set User Margin Level	*	*	*	
0x0E	Set Field Margin Level		*		
0x10	Erase Verify EEPROM Section	*	*	*	
0x11	Program EEPROM	*	*	*	
0x12	Erase EEPROM Sector	*	*	*	

1 Unsecured Normal Single Chip mode
2 Unsecured Special Single Chip mode.
3 Secured Normal Single Chip mode.
4 Secured Special Single Chip mode.

27.4.4.4 P-Flash Commands

Table 27-28 summarizes the valid P-Flash commands along with the effects of the commands on the P-Flash block and other resources within the Flash module.

Table 27-28. P-Flash Commands

FCMD	Command	Function on P-Flash Memory
0x01	Erase Verify All Blocks	Verify that all P-Flash (and EEPROM) blocks are erased.

Table 27-28. P-Flash Commands

FCMD	Command	Function on P-Flash Memory
0x02	Erase Verify Block	Verify that a P-Flash block is erased.
0x03	Erase Verify P-Flash Section	Verify that a given number of words starting at the address provided are erased.
0x04	Read Once	Read a dedicated 64 byte field in the nonvolatile information register in P-Flash block that was previously programmed using the Program Once command.
0x06	Program P-Flash	Program a phrase in a P-Flash block.
0x07	Program Once	Program a dedicated 64 byte field in the nonvolatile information register in P-Flash block that is allowed to be programmed only once.
0x08	Erase All Blocks	Erase all P-Flash (and EEPROM) blocks. An erase of all Flash blocks is only possible when the FPLDIS, FPHDIS, and FPOPEN bits in the FPROT register and the DPOPEN bit in the EEPROT register are set prior to launching the command.
0x09	Erase Flash Block	Erase a P-Flash (or EEPROM) block. An erase of the full P-Flash block is only possible when FPLDIS, FPHDIS and FPOPEN bits in the FPROT register are set prior to launching the command.
0x0A	Erase P-Flash Sector	Erase all bytes in a P-Flash sector.
0x0B	Unsecure Flash	Supports a method of releasing MCU security by erasing all P-Flash (and EEPROM) blocks and verifying that all P-Flash (and EEPROM) blocks are erased.
0x0C	Verify Backdoor Access Key	Supports a method of releasing MCU security by verifying a set of security keys.
0x0D	Set User Margin Level	Specifies a user margin read level for all P-Flash blocks.
0x0E	Set Field Margin Level	Specifies a field margin read level for all P-Flash blocks (special modes only).

27.4.4.5 EEPROM Commands

Table 27-29 summarizes the valid EEPROM commands along with the effects of the commands on the EEPROM block.

Table 27-29. EEPROM Commands

FCMD	Command	Function on EEPROM Memory
0x01	Erase Verify All Blocks	Verify that all EEPROM (and P-Flash) blocks are erased.
0x02	Erase Verify Block	Verify that the EEPROM block is erased.

Table 27-29. EEPROM Commands

FCMD	Command	Function on EEPROM Memory
0x08	Erase All Blocks	Erase all EEPROM (and P-Flash) blocks. An erase of all Flash blocks is only possible when the FPLDIS, FPHDIS, and FPOPEN bits in the FPROT register and the DPOPEN bit in the EEPROT register are set prior to launching the command.
0x09	Erase Flash Block	Erase a EEPROM (or P-Flash) block. An erase of the full EEPROM block is only possible when DPOPEN bit in the EEPROT register is set prior to launching the command.
0x0B	Unsecure Flash	Supports a method of releasing MCU security by erasing all EEPROM (and P-Flash) blocks and verifying that all EEPROM (and P-Flash) blocks are erased.
0x0D	Set User Margin Level	Specifies a user margin read level for the EEPROM block.
0x0E	Set Field Margin Level	Specifies a field margin read level for the EEPROM block (special modes only).
0x10	Erase Verify EEPROM Section	Verify that a given number of words starting at the address provided are erased.
0x11	Program EEPROM	Program up to four words in the EEPROM block.
0x12	Erase EEPROM Sector	Erase all bytes in a sector of the EEPROM block.

27.4.5 Allowed Simultaneous P-Flash and EEPROM Operations

Only the operations marked ‘OK’ in Table 27-30 are permitted to be run simultaneously on the Program Flash and EEPROM blocks. Some operations cannot be executed simultaneously because certain hardware resources are shared by the two memories. The priority has been placed on permitting Program Flash reads while program and erase operations execute on the EEPROM, providing read (P-Flash) while write (EEPROM) functionality.

Table 27-30. Allowed P-Flash and EEPROM Simultaneous Operations

	EEPROM				
Program Flash	**Read**	**Margin Read[1]**	**Program**	**Sector Erase**	**Mass Erase[2]**
Read		OK	OK	OK	
Margin Read[1]					
Program					
Sector Erase					
Mass Erase[2]					OK

1 A ‘Margin Read’ is any read after executing the margin setting commands ‘Set User Margin Level’ or ‘Set Field Margin Level’ with anything but the ‘normal’ level specified. See the Note on margin settings in Section 27.4.6.12 and Section 27.4.6.13.

2 The ‘Mass Erase’ operations are commands ‘Erase All Blocks’ and ‘Erase Flash Block’

27.4.6 Flash Command Description

This section provides details of all available Flash commands launched by a command write sequence. The ACCERR bit in the FSTAT register will be set during the command write sequence if any of the following illegal steps are performed, causing the command not to be processed by the Memory Controller:

- Starting any command write sequence that programs or erases Flash memory before initializing the FCLKDIV register
- Writing an invalid command as part of the command write sequence
- For additional possible errors, refer to the error handling table provided for each command

If a Flash block is read during execution of an algorithm (CCIF = 0) on that same block, the read operation will return invalid data if both flags SFDIF and DFDIF are set. If the SFDIF or DFDIF flags were not previously set when the invalid read operation occurred, both the SFDIF and DFDIF flags will be set.

If the ACCERR or FPVIOL bits are set in the FSTAT register, the user must clear these bits before starting any command write sequence (see Section 27.3.2.7).

CAUTION

A Flash word or phrase must be in the erased state before being programmed. Cumulative programming of bits within a Flash word or phrase is not allowed.

27.4.6.1 Erase Verify All Blocks Command

The Erase Verify All Blocks command will verify that all P-Flash and EEPROM blocks have been erased.

Table 27-31. Erase Verify All Blocks Command FCCOB Requirements

CCOBIX[2:0]	FCCOB Parameters	
000	0x01	Not required

Upon clearing CCIF to launch the Erase Verify All Blocks command, the Memory Controller will verify that the entire Flash memory space is erased. The CCIF flag will set after the Erase Verify All Blocks operation has completed. If all blocks are not erased, it means blank check failed, both MGSTAT bits will be set.

Table 27-32. Erase Verify All Blocks Command Error Handling

Register	Error Bit	Error Condition
FSTAT	ACCERR	Set if CCOBIX[2:0] != 000 at command launch
	FPVIOL	None
	MGSTAT1	Set if any errors have been encountered during the reador if blank check failed .
	MGSTAT0	Set if any non-correctable errors have been encountered during the read or if blank check failed.

27.4.6.2 Erase Verify Block Command

The Erase Verify Block command allows the user to verify that an entire P-Flash or EEPROM block has been erased. The FCCOB FlashBlockSelectionCode[1:0] bits determine which block must be verified.

Table 27-33. Erase Verify Block Command FCCOB Requirements

CCOBIX[2:0]	FCCOB Parameters	
000	0x02	Flash block selection code [1:0]. See Table 27-34

Table 27-34. Flash block selection code description

Selection code[1:0]	Flash block to be verified
00	EEPROM
01	Invalid (ACCERR)
10	Invalid (ACCERR)
11	P-Flash

Upon clearing CCIF to launch the Erase Verify Block command, the Memory Controller will verify that the selected P-Flash or EEPROM block is erased. The CCIF flag will set after the Erase Verify Block operation has completed.If the block is not erased, it means blank check failed, both MGSTAT bits will be set.

Table 27-35. Erase Verify Block Command Error Handling

Register	Error Bit	Error Condition
FSTAT	ACCERR	Set if CCOBIX[2:0] != 000 at command launch
		Set if an invalid FlashBlockSelectionCode[1:0] is supplied
	FPVIOL	None
	MGSTAT1	Set if any errors have been encountered during the read or if blank check failed.
	MGSTAT0	Set if any non-correctable errors have been encountered during the read or if blank check failed.

27.4.6.3 Erase Verify P-Flash Section Command

The Erase Verify P-Flash Section command will verify that a section of code in the P-Flash memory is erased. The Erase Verify P-Flash Section command defines the starting point of the code to be verified and the number of phrases.

Table 27-36. Erase Verify P-Flash Section Command FCCOB Requirements

CCOBIX[2:0]	FCCOB Parameters	
000	0x03	Global address [17:16] of a P-Flash block
001	Global address [15:0] of the first phrase to be verified	
010	Number of phrases to be verified	

Upon clearing CCIF to launch the Erase Verify P-Flash Section command, the Memory Controller will verify the selected section of Flash memory is erased. The CCIF flag will set after the Erase Verify P-Flash Section operation has completed. If the section is not erased, it means blank check failed, both MGSTAT bits will be set.

Table 27-37. Erase Verify P-Flash Section Command Error Handling

Register	Error Bit	Error Condition
FSTAT	ACCERR	Set if CCOBIX[2:0] != 010 at command launch
		Set if command not available in current mode (see Table 27-27)
		Set if an invalid global address [17:0] is supplied see Table 27-3)
		Set if a misaligned phrase address is supplied (global address [2:0] != 000)
		Set if the requested section crosses a the P-Flash address boundary
	FPVIOL	None
	MGSTAT1	Set if any errors have been encountered during the read or if blank check failed.
	MGSTAT0	Set if any non-correctable errors have been encountered during the read or if blank check failed.

27.4.6.4 Read Once Command

The Read Once command provides read access to a reserved 64 byte field (8 phrases) located in the nonvolatile information register of P-Flash. The Read Once field is programmed using the Program Once command described in Section 27.4.6.6. The Read Once command must not be executed from the Flash block containing the Program Once reserved field to avoid code runaway.

Table 27-38. Read Once Command FCCOB Requirements

CCOBIX[2:0]	FCCOB Parameters	
000	0x04	Not Required
001	Read Once phrase index (0x0000 - 0x0007)	
010	Read Once word 0 value	
011	Read Once word 1 value	
100	Read Once word 2 value	
101	Read Once word 3 value	

Upon clearing CCIF to launch the Read Once command, a Read Once phrase is fetched and stored in the FCCOB indexed register. The CCIF flag will set after the Read Once operation has completed. Valid phrase index values for the Read Once command range from 0x0000 to 0x0007. During execution of the Read Once command, any attempt to read addresses within P-Flash block will return invalid data.

Table 27-39. Read Once Command Error Handling

Register	Error Bit	Error Condition
FSTAT	ACCERR	Set if CCOBIX[2:0] != 001 at command launch
		Set if command not available in current mode (see Table 27-27)
		Set if an invalid phrase index is supplied
	FPVIOL	None
	MGSTAT1	Set if any errors have been encountered during the read
	MGSTAT0	Set if any non-correctable errors have been encountered during the read

27.4.6.5 Program P-Flash Command

The Program P-Flash operation will program a previously erased phrase in the P-Flash memory using an embedded algorithm.

CAUTION

A P-Flash phrase must be in the erased state before being programmed. Cumulative programming of bits within a Flash phrase is not allowed.

Table 27-40. Program P-Flash Command FCCOB Requirements

CCOBIX[2:0]	FCCOB Parameters	
000	0x06	Global address [17:16] to identify P-Flash block
001	Global address [15:0] of phrase location to be programmed[1]	
010	Word 0 program value	
011	Word 1 program value	
100	Word 2 program value	
101	Word 3 program value	

1 Global address [2:0] must be 000

Upon clearing CCIF to launch the Program P-Flash command, the Memory Controller will program the data words to the supplied global address and will then proceed to verify the data words read back as expected. The CCIF flag will set after the Program P-Flash operation has completed.

Table 27-41. Program P-Flash Command Error Handling

Register	Error Bit	Error Condition
FSTAT	ACCERR	Set if CCOBIX[2:0] != 101 at command launch
		Set if command not available in current mode (see Table 27-27)
		Set if an invalid global address [17:0] is supplied see Table 27-3)
		Set if a misaligned phrase address is supplied (global address [2:0] != 000)
	FPVIOL	Set if the global address [17:0] points to a protected area
	MGSTAT1	Set if any errors have been encountered during the verify operation
	MGSTAT0	Set if any non-correctable errors have been encountered during the verify operation

27.4.6.6 Program Once Command

The Program Once command restricts programming to a reserved 64 byte field (8 phrases) in the nonvolatile information register located in P-Flash. The Program Once reserved field can be read using the Read Once command as described in Section 27.4.6.4. The Program Once command must only be issued once since the nonvolatile information register in P-Flash cannot be erased. The Program Once command must not be executed from the Flash block containing the Program Once reserved field to avoid code runaway.

Table 27-42. Program Once Command FCCOB Requirements

CCOBIX[2:0]	FCCOB Parameters	
000	0x07	Not Required
001	Program Once phrase index (0x0000 - 0x0007)	
010	Program Once word 0 value	
011	Program Once word 1 value	
100	Program Once word 2 value	
101	Program Once word 3 value	

Upon clearing CCIF to launch the Program Once command, the Memory Controller first verifies that the selected phrase is erased. If erased, then the selected phrase will be programmed and then verified with read back. The CCIF flag will remain clear, setting only after the Program Once operation has completed.

The reserved nonvolatile information register accessed by the Program Once command cannot be erased and any attempt to program one of these phrases a second time will not be allowed. Valid phrase index values for the Program Once command range from 0x0000 to 0x0007. During execution of the Program Once command, any attempt to read addresses within P-Flash will return invalid data.

Table 27-43. Program Once Command Error Handling

Register	Error Bit	Error Condition
FSTAT	ACCERR	Set if CCOBIX[2:0] != 101 at command launch
		Set if command not available in current mode (see Table 27-27)
		Set if an invalid phrase index is supplied
		Set if the requested phrase has already been programmed[1]
	FPVIOL	None
	MGSTAT1	Set if any errors have been encountered during the verify operation
	MGSTAT0	Set if any non-correctable errors have been encountered during the verify operation

1 If a Program Once phrase is initially programmed to 0xFFFF_FFFF_FFFF_FFFF, the Program Once command will be allowed to execute again on that same phrase.

27.4.6.7 Erase All Blocks Command

The Erase All Blocks operation will erase the entire P-Flash and EEPROM memory space.

Table 27-44. Erase All Blocks Command FCCOB Requirements

CCOBIX[2:0]	FCCOB Parameters	
000	0x08	Not required

Upon clearing CCIF to launch the Erase All Blocks command, the Memory Controller will erase the entire Flash memory space and verify that it is erased. If the Memory Controller verifies that the entire Flash memory space was properly erased, security will be released. During the execution of this command (CCIF=0) the user must not write to any Flash module register. The CCIF flag will set after the Erase All Blocks operation has completed.

Table 27-45. Erase All Blocks Command Error Handling

Register	Error Bit	Error Condition
FSTAT	ACCERR	Set if CCOBIX[2:0] != 000 at command launch
		Set if command not available in current mode (see Table 27-27)
	FPVIOL	Set if any area of the P-Flash or EEPROM memory is protected
	MGSTAT1	Set if any errors have been encountered during the verify operation
	MGSTAT0	Set if any non-correctable errors have been encountered during the verify operation

27.4.6.8 Erase Flash Block Command

The Erase Flash Block operation will erase all addresses in a P-Flash or EEPROM block.

Table 27-46. Erase Flash Block Command FCCOB Requirements

CCOBIX[2:0]	FCCOB Parameters	
000	0x09	Global address [17:16] to identify Flash block
001	Global address [15:0] in Flash block to be erased	

Upon clearing CCIF to launch the Erase Flash Block command, the Memory Controller will erase the selected Flash block and verify that it is erased. The CCIF flag will set after the Erase Flash Block operation has completed.

Table 27-47. Erase Flash Block Command Error Handling

Register	Error Bit	Error Condition
FSTAT	ACCERR	Set if CCOBIX[2:0] != 001 at command launch
		Set if command not available in current mode (see Table 27-27)
		Set if an invalid global address [17:16] is supplied
		Set if the supplied P-Flash address is not phrase-aligned or if the EEPROM address is not word-aligned
	FPVIOL	Set if an area of the selected Flash block is protected
	MGSTAT1	Set if any errors have been encountered during the verify operation
	MGSTAT0	Set if any non-correctable errors have been encountered during the verify operation

27.4.6.9 Erase P-Flash Sector Command

The Erase P-Flash Sector operation will erase all addresses in a P-Flash sector.

Table 27-48. Erase P-Flash Sector Command FCCOB Requirements

CCOBIX[2:0]	FCCOB Parameters	
000	0x0A	Global address [17:16] to identify P-Flash block to be erased
001	Global address [15:0] anywhere within the sector to be erased. Refer to Section 27.1.2.1 for the P-Flash sector size.	

Upon clearing CCIF to launch the Erase P-Flash Sector command, the Memory Controller will erase the selected Flash sector and then verify that it is erased. The CCIF flag will be set after the Erase P-Flash Sector operation has completed.

Table 27-49. Erase P-Flash Sector Command Error Handling

Register	Error Bit	Error Condition
FSTAT	ACCERR	Set if CCOBIX[2:0] != 001 at command launch
		Set if command not available in current mode (see Table 27-27)
		Set if an invalid global address [17:16] is supplied see Table 27-3)
		Set if a misaligned phrase address is supplied (global address [2:0] != 000)
	FPVIOL	Set if the selected P-Flash sector is protected
	MGSTAT1	Set if any errors have been encountered during the verify operation
	MGSTAT0	Set if any non-correctable errors have been encountered during the verify operation

27.4.6.10 Unsecure Flash Command

The Unsecure Flash command will erase the entire P-Flash and EEPROM memory space and, if the erase is successful, will release security.

Table 27-50. Unsecure Flash Command FCCOB Requirements

CCOBIX[2:0]	FCCOB Parameters	
000	0x0B	Not required

Upon clearing CCIF to launch the Unsecure Flash command, the Memory Controller will erase the entire P-Flash and EEPROM memory space and verify that it is erased. If the Memory Controller verifies that the entire Flash memory space was properly erased, security will be released. If the erase verify is not successful, the Unsecure Flash operation sets MGSTAT1 and terminates without changing the security state. During the execution of this command (CCIF=0) the user must not write to any Flash module register. The CCIF flag is set after the Unsecure Flash operation has completed.

Table 27-51. Unsecure Flash Command Error Handling

Register	Error Bit	Error Condition
FSTAT	ACCERR	Set if CCOBIX[2:0] != 000 at command launch
		Set if command not available in current mode (see Table 27-27)
	FPVIOL	Set if any area of the P-Flash or EEPROM memory is protected
	MGSTAT1	Set if any errors have been encountered during the verify operation
	MGSTAT0	Set if any non-correctable errors have been encountered during the verify operation

27.4.6.11 Verify Backdoor Access Key Command

The Verify Backdoor Access Key command will only execute if it is enabled by the KEYEN bits in the FSEC register (see Table 27-10). The Verify Backdoor Access Key command releases security if user-supplied keys match those stored in the Flash security bytes of the Flash configuration field (see

Table 27-4). The Verify Backdoor Access Key command must not be executed from the Flash block containing the backdoor comparison key to avoid code runaway.

Table 27-52. Verify Backdoor Access Key Command FCCOB Requirements

CCOBIX[2:0]	FCCOB Parameters	
000	0x0C	Not required
001	Key 0	
010	Key 1	
011	Key 2	
100	Key 3	

Upon clearing CCIF to launch the Verify Backdoor Access Key command, the Memory Controller will check the FSEC KEYEN bits to verify that this command is enabled. If not enabled, the Memory Controller sets the ACCERR bit in the FSTAT register and terminates. If the command is enabled, the Memory Controller compares the key provided in FCCOB to the backdoor comparison key in the Flash configuration field with Key 0 compared to 0x3_FF00, etc. If the backdoor keys match, security will be released. If the backdoor keys do not match, security is not released and all future attempts to execute the Verify Backdoor Access Key command are aborted (set ACCERR) until a reset occurs. The CCIF flag is set after the Verify Backdoor Access Key operation has completed.

Table 27-53. Verify Backdoor Access Key Command Error Handling

Register	Error Bit	Error Condition
FSTAT	ACCERR	Set if CCOBIX[2:0] != 100 at command launch
		Set if an incorrect backdoor key is supplied
		Set if backdoor key access has not been enabled (KEYEN[1:0] != 10, see Section 27.3.2.2)
		Set if the backdoor key has mismatched since the last reset
	FPVIOL	None
	MGSTAT1	None
	MGSTAT0	None

27.4.6.12 Set User Margin Level Command

The Set User Margin Level command causes the Memory Controller to set the margin level for future read operations of the P-Flash or EEPROM block.

Table 27-54. Set User Margin Level Command FCCOB Requirements

CCOBIX[2:0]	FCCOB Parameters	
000	0x0D	Flash block selection code [1:0]. See Table 27-34
001	Margin level setting.	

Upon clearing CCIF to launch the Set User Margin Level command, the Memory Controller will set the user margin level for the targeted block and then set the CCIF flag.

NOTE

When the EEPROM block is targeted, the EEPROM user margin levels are applied only to the EEPROM reads. However, when the P-Flash block is targeted, the P-Flash user margin levels are applied to both P-Flash and EEPROM reads. It is not possible to apply user margin levels to the P-Flash block only.

Valid margin level settings for the Set User Margin Level command are defined in Table 27-55.

Table 27-55. Valid Set User Margin Level Settings

CCOB (CCOBIX=001)	Level Description
0x0000	Return to Normal Level
0x0001	User Margin-1 Level[1]
0x0002	User Margin-0 Level[2]

[1] Read margin to the erased state

[2] Read margin to the programmed state

Table 27-56. Set User Margin Level Command Error Handling

Register	Error Bit	Error Condition
FSTAT	ACCERR	Set if CCOBIX[2:0] != 001 at command launch
		Set if command not available in current mode (see Table 27-27)
		Set if an invalid FlashBlockSelectionCode[1:0] is supplied (See Table 27-34)
		Set if an invalid margin level setting is supplied
	FPVIOL	None
	MGSTAT1	None
	MGSTAT0	None

NOTE

User margin levels can be used to check that Flash memory contents have adequate margin for normal level read operations. If unexpected results are encountered when checking Flash memory contents at user margin levels, a potential loss of information has been detected.

27.4.6.13 Set Field Margin Level Command

The Set Field Margin Level command, valid in special modes only, causes the Memory Controller to set the margin level specified for future read operations of the P-Flash or EEPROM block.

Upon clearing CCIF to launch the Set Field Margin Level command, the Memory Controller will set the field margin level for the targeted block and then set the CCIF flag.

Table 27-57. Set Field Margin Level Command FCCOB Requirements

CCOBIX[2:0]	FCCOB Parameters	
000	0x0E	Flash block selection code [1:0]. See Table 27-34
001	Margin level setting.	

NOTE

When the EEPROM block is targeted, the EEPROM field margin levels are applied only to the EEPROM reads. However, when the P-Flash block is targeted, the P-Flash field margin levels are applied to both P-Flash and EEPROM reads. It is not possible to apply field margin levels to the P-Flash block only.

Valid margin level settings for the Set Field Margin Level command are defined in Table 27-58.

Table 27-58. Valid Set Field Margin Level Settings

CCOB (CCOBIX=001)	Level Description
0x0000	Return to Normal Level
0x0001	User Margin-1 Level[1]
0x0002	User Margin-0 Level[2]
0x0003	Field Margin-1 Level[1]
0x0004	Field Margin-0 Level[2]

1 Read margin to the erased state

2 Read margin to the programmed state

Table 27-59. Set Field Margin Level Command Error Handling

Register	Error Bit	Error Condition
FSTAT	ACCERR	Set if CCOBIX[2:0] != 001 at command launch
		Set if command not available in current mode (see Table 27-27)
		Set if an invalid FlashBlockSelectionCode[1:0] is supplied (See Table 27-34)
		Set if an invalid margin level setting is supplied
	FPVIOL	None
	MGSTAT1	None
	MGSTAT0	None

CAUTION

Field margin levels must only be used during verify of the initial factory programming.

NOTE

Field margin levels can be used to check that Flash memory contents have adequate margin for data retention at the normal level setting. If unexpected results are encountered when checking Flash memory contents at field margin levels, the Flash memory contents should be erased and reprogrammed.

27.4.6.14 Erase Verify EEPROM Section Command

The Erase Verify EEPROM Section command will verify that a section of code in the EEPROM is erased. The Erase Verify EEPROM Section command defines the starting point of the data to be verified and the number of words.

Table 27-60. Erase Verify EEPROM Section Command FCCOB Requirements

CCOBIX[2:0]	FCCOB Parameters	
000	0x10	Global address [17:16] to identify the EEPROM block
001	Global address [15:0] of the first word to be verified	
010	Number of words to be verified	

Upon clearing CCIF to launch the Erase Verify EEPROM Section command, the Memory Controller will verify the selected section of EEPROM memory is erased. The CCIF flag will set after the Erase Verify EEPROM Section operation has completed. If the section is not erased, it means blank check failed, both MGSTAT bits will be set.

Table 27-61. Erase Verify EEPROM Section Command Error Handling

Register	Error Bit	Error Condition
FSTAT	ACCERR	Set if CCOBIX[2:0] != 010 at command launch
		Set if command not available in current mode (see Table 27-27)
		Set if an invalid global address [17:0] is supplied
		Set if a misaligned word address is supplied (global address [0] != 0)
		Set if the requested section breaches the end of the EEPROM block
	FPVIOL	None
	MGSTAT1	Set if any errors have been encountered during the read or if blank check failed.
	MGSTAT0	Set if any non-correctable errors have been encountered during the read or if blank check failed.

27.4.6.15 Program EEPROM Command

The Program EEPROM operation programs one to four previously erased words in the EEPROM block. The Program EEPROM operation will confirm that the targeted location(s) were successfully programmed upon completion.

CAUTION

A Flash word must be in the erased state before being programmed. Cumulative programming of bits within a Flash word is not allowed.

Table 27-62. Program EEPROM Command FCCOB Requirements

CCOBIX[2:0]	FCCOB Parameters	
000	0x11	Global address [17:16] to identify the EEPROM block
001	Global address [15:0] of word to be programmed	
010	Word 0 program value	
011	Word 1 program value, if desired	
100	Word 2 program value, if desired	
101	Word 3 program value, if desired	

Upon clearing CCIF to launch the Program EEPROM command, the user-supplied words will be transferred to the Memory Controller and be programmed if the area is unprotected. The CCOBIX index value at Program EEPROM command launch determines how many words will be programmed in the EEPROM block. The CCIF flag is set when the operation has completed.

Table 27-63. Program EEPROM Command Error Handling

Register	Error Bit	Error Condition
FSTAT	ACCERR	Set if CCOBIX[2:0] < 010 at command launch
		Set if CCOBIX[2:0] > 101 at command launch
		Set if command not available in current mode (see Table 27-27)
		Set if an invalid global address [17:0] is supplied
		Set if a misaligned word address is supplied (global address [0] != 0)
		Set if the requested group of words breaches the end of the EEPROM block
	FPVIOL	Set if the selected area of the EEPROM memory is protected
	MGSTAT1	Set if any errors have been encountered during the verify operation
	MGSTAT0	Set if any non-correctable errors have been encountered during the verify operation

27.4.6.16 Erase EEPROM Sector Command

The Erase EEPROM Sector operation will erase all addresses in a sector of the EEPROM block.

Table 27-64. Erase EEPROM Sector Command FCCOB Requirements

CCOBIX[2:0]	FCCOB Parameters	
000	0x12	Global address [17:16] to identify EEPROM block
001	Global address [15:0] anywhere within the sector to be erased. See Section 27.1.2.2 for EEPROM sector size.	

Upon clearing CCIF to launch the Erase EEPROM Sector command, the Memory Controller will erase the selected Flash sector and verify that it is erased. The CCIF flag will set after the Erase EEPROM Sector operation has completed.

Table 27-65. Erase EEPROM Sector Command Error Handling

Register	Error Bit	Error Condition
FSTAT	ACCERR	Set if CCOBIX[2:0] != 001 at command launch
		Set if command not available in current mode (see Table 27-27)
		Set if an invalid global address [17:0] is suppliedsee Table 27-3)
		Set if a misaligned word address is supplied (global address [0] != 0)
	FPVIOL	Set if the selected area of the EEPROM memory is protected
	MGSTAT1	Set if any errors have been encountered during the verify operation
	MGSTAT0	Set if any non-correctable errors have been encountered during the verify operation

27.4.7 Interrupts

The Flash module can generate an interrupt when a Flash command operation has completed or when a Flash command operation has detected an ECC fault.

Table 27-66. Flash Interrupt Sources

Interrupt Source	Interrupt Flag	Local Enable	Global (CCR) Mask
Flash Command Complete	CCIF (FSTAT register)	CCIE (FCNFG register)	I Bit
ECC Double Bit Fault on Flash Read	DFDIF (FERSTAT register)	DFDIE (FERCNFG register)	I Bit
ECC Single Bit Fault on Flash Read	SFDIF (FERSTAT register)	SFDIE (FERCNFG register)	I Bit

NOTE

Vector addresses and their relative interrupt priority are determined at the MCU level.

27.4.7.1 Description of Flash Interrupt Operation

The Flash module uses the CCIF flag in combination with the CCIE interrupt enable bit to generate the Flash command interrupt request. The Flash module uses the DFDIF and SFDIF flags in combination with the DFDIE and SFDIE interrupt enable bits to generate the Flash error interrupt request. For a detailed description of the register bits involved, refer to Section 27.3.2.5, “Flash Configuration Register (FCNFG)”, Section 27.3.2.6, “Flash Error Configuration Register (FERCNFG)”, Section 27.3.2.7, “Flash Status Register (FSTAT)”, and Section 27.3.2.8, “Flash Error Status Register (FERSTAT)”.

The logic used for generating the Flash module interrupts is shown in Figure 27-27.

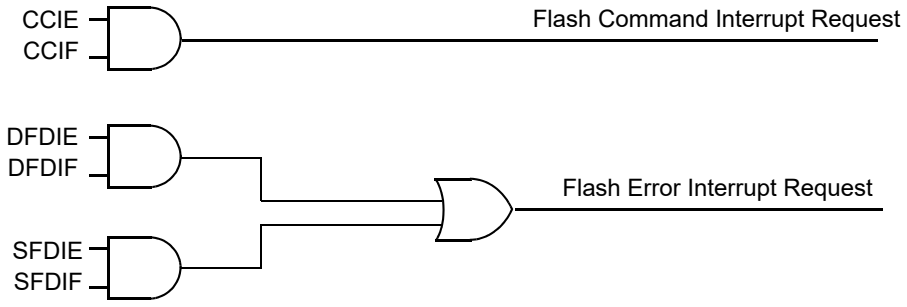

Figure 27-27. Flash Module Interrupts Implementation

27.4.8 Wait Mode

The Flash module is not affected if the MCU enters wait mode. The Flash module can recover the MCU from wait via the CCIF interrupt (see Section 27.4.7, “Interrupts”).

27.4.9 Stop Mode

If a Flash command is active (CCIF = 0) when the MCU requests stop mode, the current Flash operation will be completed before the MCU is allowed to enter stop mode.

27.5 Security

The Flash module provides security information to the MCU. The Flash security state is defined by the SEC bits of the FSEC register (see Table 27-11). During reset, the Flash module initializes the FSEC register using data read from the security byte of the Flash configuration field at global address 0x3_FF0F. The security state out of reset can be permanently changed by programming the security byte assuming that the MCU is starting from a mode where the necessary P-Flash erase and program commands are available and that the upper region of the P-Flash is unprotected. If the Flash security byte is successfully programmed, its new value will take affect after the next MCU reset.

The following subsections describe these security-related subjects:

- Unsecuring the MCU using Backdoor Key Access
- Unsecuring the MCU in Special Single Chip Mode using BDM
- Mode and Security Effects on Flash Command Availability

27.5.1 Unsecuring the MCU using Backdoor Key Access

The MCU may be unsecured by using the backdoor key access feature which requires knowledge of the contents of the backdoor keys (four 16-bit words programmed at addresses 0x3_FF00-0x3_FF07). If the KEYEN[1:0] bits are in the enabled state (see Section 27.3.2.2), the Verify Backdoor Access Key command (see Section 27.4.6.11) allows the user to present four prospective keys for comparison to the keys stored in the Flash memory via the Memory Controller. If the keys presented in the Verify Backdoor Access Key command match the backdoor keys stored in the Flash memory, the SEC bits in the FSEC register (see Table 27-11) will be changed to unsecure the MCU. Key values of 0x0000 and 0xFFFF are not permitted as backdoor keys. While the Verify Backdoor Access Key command is active, P-Flash memory and EEPROM memory will not be available for read access and will return invalid data.

The user code stored in the P-Flash memory must have a method of receiving the backdoor keys from an external stimulus. This external stimulus would typically be through one of the on-chip serial ports.

If the KEYEN[1:0] bits are in the enabled state (see Section 27.3.2.2), the MCU can be unsecured by the backdoor key access sequence described below:

1. Follow the command sequence for the Verify Backdoor Access Key command as explained in Section 27.4.6.11
2. If the Verify Backdoor Access Key command is successful, the MCU is unsecured and the SEC[1:0] bits in the FSEC register are forced to the unsecure state of 10

The Verify Backdoor Access Key command is monitored by the Memory Controller and an illegal key will prohibit future use of the Verify Backdoor Access Key command. A reset of the MCU is the only method to re-enable the Verify Backdoor Access Key command. The security as defined in the Flash security byte (0x3_FF0F) is not changed by using the Verify Backdoor Access Key command sequence. The backdoor keys stored in addresses 0x3_FF00-0x3_FF07 are unaffected by the Verify Backdoor Access Key command sequence. The Verify Backdoor Access Key command sequence has no effect on the program and erase protections defined in the Flash protection register, FPROT.

After the backdoor keys have been correctly matched, the MCU will be unsecured. After the MCU is unsecured, the sector containing the Flash security byte can be erased and the Flash security byte can be reprogrammed to the unsecure state, if desired. In the unsecure state, the user has full control of the contents of the backdoor keys by programming addresses 0x3_FF00-0x3_FF07 in the Flash configuration field.

27.5.2 Unsecuring the MCU in Special Single Chip Mode using BDM

A secured MCU can be unsecured in special single chip mode by using the following method to erase the P-Flash and EEPROM memory:

1. Reset the MCU into special single chip mode
2. Delay while the BDM executes the Erase Verify All Blocks command write sequence to check if the P-Flash and EEPROM memories are erased
3. Send BDM commands to disable protection in the P-Flash and EEPROM memory
4. Execute the Erase All Blocks command write sequence to erase the P-Flash and EEPROM memory. Alternatively the Unsecure Flash command can be executed, if so the steps 5 and 6 below are skeeped.
5. After the CCIF flag sets to indicate that the Erase All Blocks operation has completed, reset the MCU into special single chip mode
6. Delay while the BDM executes the Erase Verify All Blocks command write sequence to verify that the P-Flash and EEPROM memory are erased

If the P-Flash and EEPROM memory are verified as erased, the MCU will be unsecured. All BDM commands will now be enabled and the Flash security byte may be programmed to the unsecure state by continuing with the following steps:

7. Send BDM commands to execute the Program P-Flash command write sequence to program the Flash security byte to the unsecured state

8. Reset the MCU

27.5.3 Mode and Security Effects on Flash Command Availability

The availability of Flash module commands depends on the MCU operating mode and security state as shown in Table 27-27.

27.6 Initialization

On each system reset the flash module executes an initialization sequence which establishes initial values for the Flash Block Configuration Parameters, the FPROT and EEPROT protection registers, and the FOPT and FSEC registers. The initialization routine reverts to built-in default values that leave the module in a fully protected and secured state if errors are encountered during execution of the reset sequence. If a double bit fault is detected during the reset sequence, both MGSTAT bits in the FSTAT register will be set.

CCIF is cleared throughout the initialization sequence. The Flash module holds off all CPU access for a portion of the initialization sequence. Flash reads are allowed once the hold is removed. Completion of the initialization sequence is marked by setting CCIF high which enables user commands.

If a reset occurs while any Flash command is in progress, that command will be immediately aborted. The state of the word being programmed or the sector/block being erased is not guaranteed.

Chapter 28
96 KByte Flash Module (S12FTMRG96K1V1)

Table 28-1. Revision History

Revision Number	Revision Date	Sections Affected	Description of Changes
V01.04	17 Jun 2010	28.4.6.1/28-1002 28.4.6.2/28-1003 28.4.6.3/28-1004 28.4.6.14/28-1013	Clarify Erase Verify Commands Descriptions related to the bits MGSTAT[1:0] of the register FSTAT.
V01.05	20 Aug 2010	28.4.6.2/28-1003 28.4.6.12/28-1010 28.4.6.13/28-1012	Updated description of the commands RD1BLK, MLOADU and MLOADF
V01.06	31 Jan 2011	28.3.2.9/28-985	Updated description of protection on Section 28.3.2.9

28.1 Introduction

The FTMRG96K1 module implements the following:

- 96Kbytes of P-Flash (Program Flash) memory
- 3 Kbytes of EEPROM memory

The Flash memory is ideal for single-supply applications allowing for field reprogramming without requiring external high voltage sources for program or erase operations. The Flash module includes a memory controller that executes commands to modify Flash memory contents. The user interface to the memory controller consists of the indexed Flash Common Command Object (FCCOB) register which is written to with the command, global address, data, and any required command parameters. The memory controller must complete the execution of a command before the FCCOB register can be written to with a new command.

CAUTION

A Flash word or phrase must be in the erased state before being programmed. Cumulative programming of bits within a Flash word or phrase is not allowed.

The Flash memory may be read as bytes and aligned words. Read access time is one bus cycle for bytes and aligned words. For misaligned words access, the CPU has to perform twice the byte read access command. For Flash memory, an erased bit reads 1 and a programmed bit reads 0.

It is possible to read from P-Flash memory while some commands are executing on EEPROM memory. It is not possible to read from EEPROM memory while a command is executing on P-Flash memory. Simultaneous P-Flash and EEPROM operations are discussed in Section 28.4.5.

Both P-Flash and EEPROM memories are implemented with Error Correction Codes (ECC) that can resolve single bit faults and detect double bit faults. For P-Flash memory, the ECC implementation requires that programming be done on an aligned 8 byte basis (a Flash phrase). Since P-Flash memory is always read by half-phrase, only one single bit fault in an aligned 4 byte half-phrase containing the byte or word accessed will be corrected.

28.1.1 Glossary

Command Write Sequence — An MCU instruction sequence to execute built-in algorithms (including program and erase) on the Flash memory.

EEPROM Memory — The EEPROM memory constitutes the nonvolatile memory store for data.

EEPROM Sector — The EEPROM sector is the smallest portion of the EEPROM memory that can be erased. The EEPROM sector consists of 4 bytes.

NVM Command Mode — An NVM mode using the CPU to setup the FCCOB register to pass parameters required for Flash command execution.

Phrase — An aligned group of four 16-bit words within the P-Flash memory. Each phrase includes two sets of aligned double words with each set including 7 ECC bits for single bit fault correction and double bit fault detection within each double word.

P-Flash Memory — The P-Flash memory constitutes the main nonvolatile memory store for applications.

P-Flash Sector — The P-Flash sector is the smallest portion of the P-Flash memory that can be erased. Each P-Flash sector contains 512 bytes.

Program IFR — Nonvolatile information register located in the P-Flash block that contains the Version ID, and the Program Once field.

28.1.2 Features

28.1.2.1 P-Flash Features

- 96 Kbytes of P-Flash memory composed of one 96 Kbyte Flash block divided into 192 sectors of 512 bytes
- Single bit fault correction and double bit fault detection within a 32-bit double word during read operations
- Automated program and erase algorithm with verify and generation of ECC parity bits

- Fast sector erase and phrase program operation
- Ability to read the P-Flash memory while programming a word in the EEPROM memory
- Flexible protection scheme to prevent accidental program or erase of P-Flash memory

28.1.2.2 EEPROM Features

- 3 Kbytes of EEPROM memory composed of one 3 Kbyte Flash block divided into 768 sectors of 4 bytes
- Single bit fault correction and double bit fault detection within a word during read operations
- Automated program and erase algorithm with verify and generation of ECC parity bits
- Fast sector erase and word program operation
- Protection scheme to prevent accidental program or erase of EEPROM memory
- Ability to program up to four words in a burst sequence

28.1.2.3 Other Flash Module Features

- No external high-voltage power supply required for Flash memory program and erase operations
- Interrupt generation on Flash command completion and Flash error detection
- Security mechanism to prevent unauthorized access to the Flash memory

28.1.3 Block Diagram

The block diagram of the Flash module is shown in Figure 28-1.

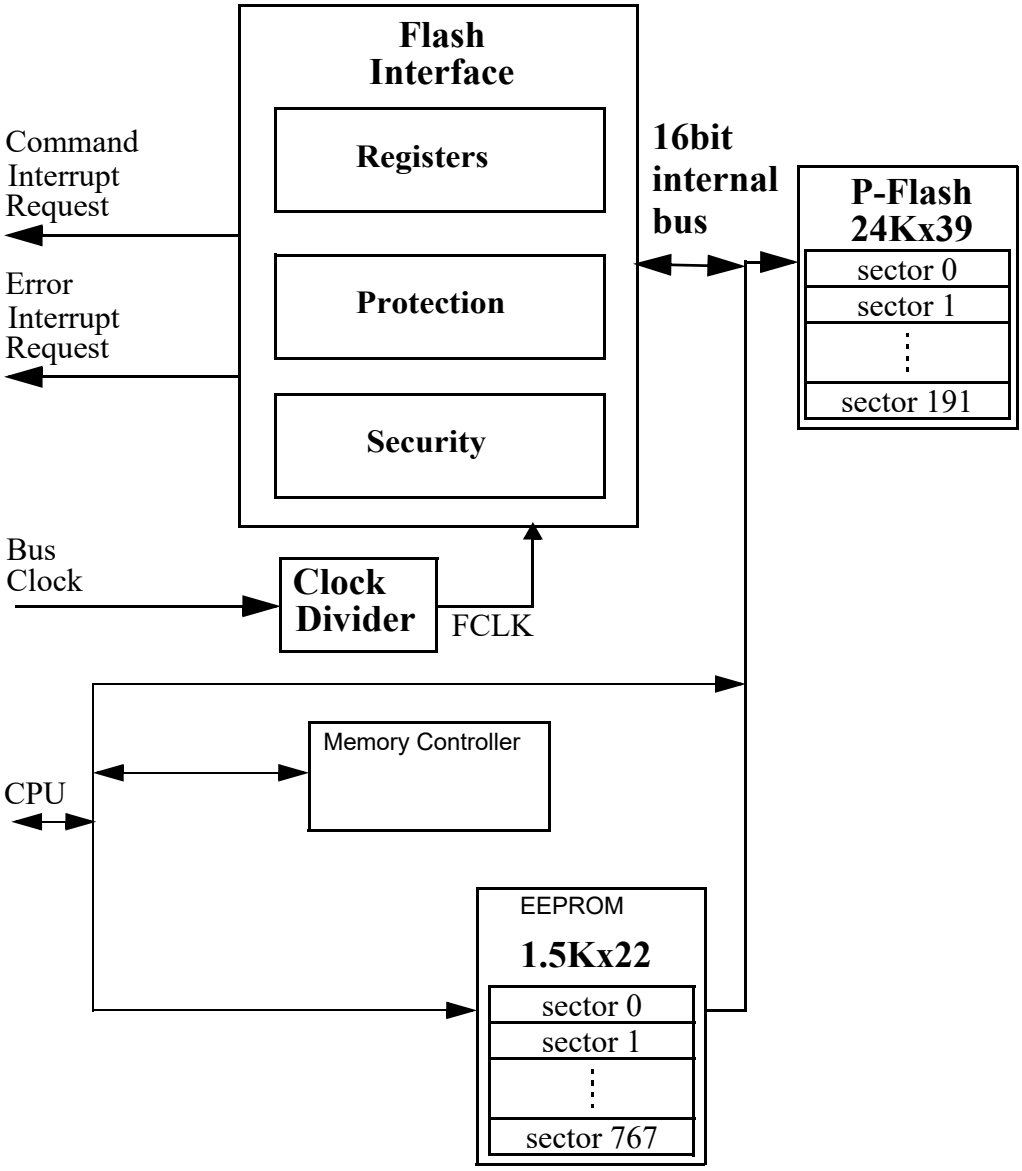

Figure 28-1. FTMRG96K1 Block Diagram

28.2 External Signal Description

The Flash module contains no signals that connect off-chip.

28.3 Memory Map and Registers

This section describes the memory map and registers for the Flash module. Read data from unimplemented memory space in the Flash module is undefined. Write access to unimplemented or reserved memory space in the Flash module will be ignored by the Flash module.

CAUTION

Writing to the Flash registers while a Flash command is executing (that is indicated when the value of flag CCIF reads as ’0’) is not allowed. If such action is attempted the write operation will not change the register value.

Writing to the Flash registers is allowed when the Flash is not busy executing commands (CCIF = 1) and during initialization right after reset, despite the value of flag CCIF in that case (refer to Section 28.6 for a complete description of the reset sequence).

.

Table 28-2. FTMRG Memory Map

Global Address (in Bytes)	Size (Bytes)	Description
0x0_0000 - 0x0_03FF	1,024	Register Space
0x0_0400 – 0x0_0FFF	3,072	EEPROM Memory
0x0_1000 – 0x0_13FF	1,024	FTMRG reserved area
0x0_4000 – 0x0_7FFF	16,284	NVMRES[1]=1 : NVM Resource area (see Figure 28-3)
0x2_0000 – 0x2_7FFF	32,767	FTMRG reserved area
0x2_8000 – 0x3_FFFF	98,304	P-Flash Memory

[1] See NVMRES description in Section 28.4.3

28.3.1 Module Memory Map

The S12 architecture places the P-Flash memory between global addresses 0x2_8000 and 0x3_FFFF as shown in Table 28-3.The P-Flash memory map is shown in Figure 28-2.

Table 28-3. P-Flash Memory Addressing

Global Address	Size (Bytes)	Description
0x2_8000 – 0x3_FFFF	96 K	P-Flash Block Contains Flash Configuration Field (see Table 28-4)

The FPROT register, described in Section 28.3.2.9, can be set to protect regions in the Flash memory from accidental program or erase. Three separate memory regions, one growing upward from global address 0x3_8000 in the Flash memory (called the lower region), one growing downward from global address 0x3_FFFF in the Flash memory (called the higher region), and the remaining addresses in the Flash memory, can be activated for protection. The Flash memory addresses covered by these protectable regions are shown in the P-Flash memory map. The higher address region is mainly targeted to hold the boot loader code since it covers the vector space. Default protection settings as well as security information that allows the MCU to restrict access to the Flash module are stored in the Flash configuration field as described in Table 28-4.

Table 28-4. Flash Configuration Field

Global Address	Size (Bytes)	Description
0x3_FF00-0x3_FF07	8	Backdoor Comparison Key Refer to Section 28.4.6.11, “Verify Backdoor Access Key Command,” and Section 28.5.1, “Unsecuring the MCU using Backdoor Key Access”
0x3_FF08-0x3_FF0B[1]	4	Reserved
0x3_FF0C[1]	1	P-Flash Protection byte. Refer to Section 28.3.2.9, “P-Flash Protection Register (FPROT)”
0x3_FF0D[1]	1	EEPROM Protection byte. Refer to Section 28.3.2.10, “EEPROM Protection Register (EEPROT)”
0x3_FF0E[1]	1	Flash Nonvolatile byte Refer to Section 28.3.2.16, “Flash Option Register (FOPT)”
0x3_FF0F[1]	1	Flash Security byte Refer to Section 28.3.2.2, “Flash Security Register (FSEC)”

1 0x3FF08-0x3_FF0F form a Flash phrase and must be programmed in a single command write sequence. Each byte in the 0x3_FF08 - 0x3_FF0B reserved field should be programmed to 0xFF.

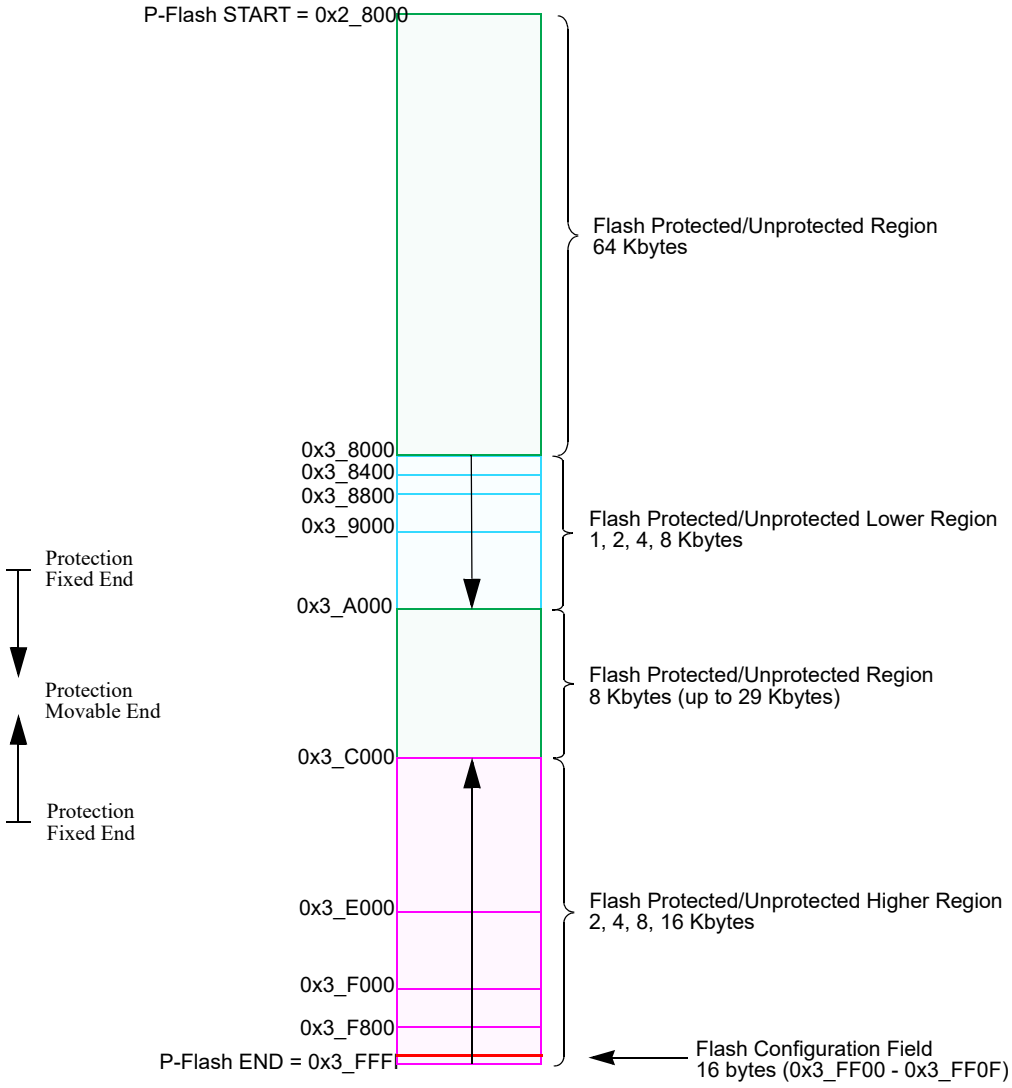

Figure 28-2. P-Flash Memory Map

Table 28-5. Program IFR Fields

Global Address	Size (Bytes)	Field Description
0x0_4000 – 0x0_4007	8	Reserved
0x0_4008 – 0x0_40B5	174	Reserved
0x0_40B6 – 0x0_40B7	2	Version ID[1]
0x0_40B8 – 0x0_40BF	8	Reserved
0x0_40C0 – 0x0_40FF	64	Program Once Field Refer to Section 28.4.6.6, “Program Once Command”

[1] Used to track firmware patch versions, see Section 28.4.2

Table 28-6. Memory Controller Resource Fields (NVMRES[1]=1)

Global Address	Size (Bytes)	Description
0x0_4000 – 0x040FF	256	P-Flash IFR (see Table 28-5)
0x0_4100 – 0x0_41FF	256	Reserved.
0x0_4200 – 0x0_57FF		Reserved
0x0_5800 – 0x0_59FF	512	Reserved
0x0_5A00 – 0x0_5FFF	1,536	Reserved
0x0_6000 – 0x0_6BFF	3,072	Reserved
0x0_6C00 – 0x0_7FFF	5,120	Reserved

1 NVMRES - See Section 28.4.3 for NVMRES (NVM Resource) detail.

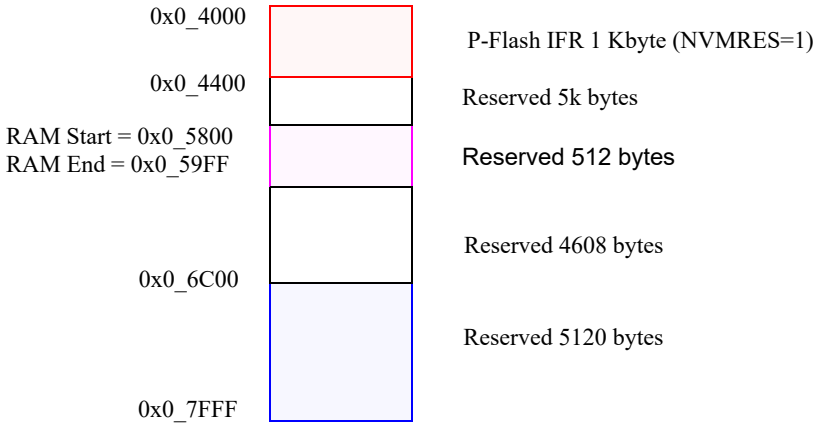

Figure 28-3. Memory Controller Resource Memory Map (NVMRES=1)

28.3.2 Register Descriptions

The Flash module contains a set of 20 control and status registers located between Flash module base + 0x0000 and 0x0013.

In the case of the writable registers, the write accesses are forbidden during Fash command execution (for more detail, see Caution note in Section 28.3).

A summary of the Flash module registers is given in Figure 28-4 with detailed descriptions in the following subsections.

Address & Name		7	6	5	4	3	2	1	0
0x0000 FCLKDIV	R	FDIVLD	FDIVLCK	FDIV5	FDIV4	FDIV3	FDIV2	FDIV1	FDIV0
	W								
0x0001 FSEC	R	KEYEN1	KEYEN0	RNV5	RNV4	RNV3	RNV2	SEC1	SEC0
	W								
0x0002 FCCOBIX	R	0	0	0	0	0	CCOBIX2	CCOBIX1	CCOBIX0
	W								
0x0003 FRSV0	R	0	0	0	0	0	0	0	0
	W								
0x0004 FCNFG	R	CCIE	0	0	IGNSF	0	0	FDFD	FSFD
	W								
0x0005 FERCNFG	R	0	0	0	0	0	0	DFDIE	SFDIE
	W								
0x0006 FSTAT	R	CCIF	0	ACCERR	FPVIOL	MGBUSY	RSVD	MGSTAT1	MGSTAT0
	W								
0x0007 FERSTAT	R	0	0	0	0	0	0	DFDIF	SFDIF
	W								
0x0008 FPROT	R	FPOPEN	RNV6	FPHDIS	FPHS1	FPHS0	FPLDIS	FPLS1	FPLS0
	W								
0x0009 EEPROT	R	DPOPEN	DPS6	DPS5	DPS4	DPS3	DPS2	DPS1	DPS0
	W								
0x000A FCCOBHI	R	CCOB15	CCOB14	CCOB13	CCOB12	CCOB11	CCOB10	CCOB9	CCOB8
	W								
0x000B FCCOBLO	R	CCOB7	CCOB6	CCOB5	CCOB4	CCOB3	CCOB2	CCOB1	CCOB0
	W								
0x000C FRSV1	R	0	0	0	0	0	0	0	0
	W								

Figure 28-4. FTMRG96K1 Register Summary

Address & Name		7	6	5	4	3	2	1	0
0x000D FRSV2	R	0	0	0	0	0	0	0	0
	W								
0x000E FRSV3	R	0	0	0	0	0	0	0	0
	W								
0x000F FRSV4	R	0	0	0	0	0	0	0	0
	W								
0x0010 FOPT	R	NV7	NV6	NV5	NV4	NV3	NV2	NV1	NV0
	W								
0x0011 FRSV5	R	0	0	0	0	0	0	0	0
	W								
0x0012 FRSV6	R	0	0	0	0	0	0	0	0
	W								
0x0013 FRSV7	R	0	0	0	0	0	0	0	0
	W								

= Unimplemented or Reserved

Figure 28-4. FTMRG96K1 Register Summary (continued)

28.3.2.1 Flash Clock Divider Register (FCLKDIV)

The FCLKDIV register is used to control timed events in program and erase algorithms.

Offset Module Base + 0x0000

	7	6	5	4	3	2	1	0
R	FDIVLD	FDIVLCK	FDIV[5:0]					
W								
Reset	0	0	0	0	0	0	0	0

= Unimplemented or Reserved

Figure 28-5. Flash Clock Divider Register (FCLKDIV)

All bits in the FCLKDIV register are readable, bit 7 is not writable, bit 6 is write-once-hi and controls the writability of the FDIV field in normal mode. In special mode, bits 6-0 are writable any number of times but bit 7 remains unwritable.

CAUTION

The FCLKDIV register should never be written while a Flash command is executing (CCIF=0).

Table 28-7. FCLKDIV Field Descriptions

Field	Description
7 FDIVLD	Clock Divider Loaded 0 FCLKDIV register has not been written since the last reset 1 FCLKDIV register has been written since the last reset
6 FDIVLCK	Clock Divider Locked 0 FDIV field is open for writing 1 FDIV value is locked and cannot be changed. Once the lock bit is set high, only reset can clear this bit and restore writability to the FDIV field in normal mode.
5–0 FDIV[5:0]	**Clock Divider Bits** — FDIV[5:0] must be set to effectively divide BUSCLK down to 1 MHz to control timed events during Flash program and erase algorithms. Table 28-8 shows recommended values for FDIV[5:0] based on the BUSCLK frequency. Please refer to Section 28.4.4, “Flash Command Operations,” for more information.

Table 28-8. FDIV values for various BUSCLK Frequencies

BUSCLK Frequency (MHz)		FDIV[5:0]	BUSCLK Frequency (MHz)		FDIV[5:0]
MIN[1]	MAX[2]		MIN[1]	MAX[2]	
1.0	1.6	0x00	16.6	17.6	0x10
1.6	2.6	0x01	17.6	18.6	0x11
2.6	3.6	0x02	18.6	19.6	0x12
3.6	4.6	0x03	19.6	20.6	0x13
4.6	5.6	0x04	20.6	21.6	0x14
5.6	6.6	0x05	21.6	22.6	0x15
6.6	7.6	0x06	22.6	23.6	0x16
7.6	8.6	0x07	23.6	24.6	0x17
8.6	9.6	0x08	24.6	25.6	0x18
9.6	10.6	0x09			
10.6	11.6	0x0A			
11.6	12.6	0x0B			
12.6	13.6	0x0C			
13.6	14.6	0x0D			
14.6	15.6	0x0E			
15.6	16.6	0x0F			

1 BUSCLK is Greater Than this value.

2 BUSCLK is Less Than or Equal to this value.

28.3.2.2 Flash Security Register (FSEC)

The FSEC register holds all bits associated with the security of the MCU and Flash module.

Offset Module Base + 0x0001

	7	6	5	4	3	2	1	0
R	KEYEN[1:0]		RNV[5:2]				SEC[1:0]	
W								
Reset	F[1]	F[1]	F[1]	F[1]	F[1]	F[1]	F[1]	F[1]

= Unimplemented or Reserved

Figure 28-6. Flash Security Register (FSEC)

1 Loaded from IFR Flash configuration field, during reset sequence.

All bits in the FSEC register are readable but not writable.

During the reset sequence, the FSEC register is loaded with the contents of the Flash security byte in the Flash configuration field at global address 0x3_FF0F located in P-Flash memory (see Table 28-4) as indicated by reset condition F in Figure 28-6. If a double bit fault is detected while reading the P-Flash phrase containing the Flash security byte during the reset sequence, all bits in the FSEC register will be set to leave the Flash module in a secured state with backdoor key access disabled.

Table 28-9. FSEC Field Descriptions

Field	Description
7–6 KEYEN[1:0]	**Backdoor Key Security Enable Bits** — The KEYEN[1:0] bits define the enabling of backdoor key access to the Flash module as shown in Table 28-10.
5–2 RNV[5:2]	**Reserved Nonvolatile Bits** — The RNV bits should remain in the erased state for future enhancements.
1–0 SEC[1:0]	**Flash Security Bits** — The SEC[1:0] bits define the security state of the MCU as shown in Table 28-11. If the Flash module is unsecured using backdoor key access, the SEC bits are forced to 10.

Table 28-10. Flash KEYEN States

KEYEN[1:0]	Status of Backdoor Key Access
00	DISABLED
01	DISABLED[1]
10	ENABLED
11	DISABLED

1 Preferred KEYEN state to disable backdoor key access.

Table 28-11. Flash Security States

SEC[1:0]	Status of Security
00	SECURED
01	SECURED[1]
10	UNSECURED
11	SECURED

1 Preferred SEC state to set MCU to secured state.

The security function in the Flash module is described in Section 28.5.

28.3.2.3 Flash CCOB Index Register (FCCOBIX)

The FCCOBIX register is used to index the FCCOB register for Flash memory operations.

Offset Module Base + 0x0002

	7	6	5	4	3	2	1	0
R	0	0	0	0	0	CCOBIX[2:0]		
W								
Reset	0	0	0	0	0	0	0	0

= Unimplemented or Reserved

Figure 28-7. FCCOB Index Register (FCCOBIX)

CCOBIX bits are readable and writable while remaining bits read 0 and are not writable.

Table 28-12. FCCOBIX Field Descriptions

Field	Description
2–0 CCOBIX[1:0]	**Common Command Register Index**— The CCOBIX bits are used to select which word of the FCCOB register array is being read or written to. See 28.3.2.11 Flash Common Command Object Register (FCCOB),” for more details.

28.3.2.4 Flash Reserved0 Register (FRSV0)

This Flash register is reserved for factory testing.

Offset Module Base + 0x000C

	7	6	5	4	3	2	1	0
R	0	0	0	0	0	0	0	0
W								
Reset	0	0	0	0	0	0	0	0

= Unimplemented or Reserved

Figure 28-8. Flash Reserved0 Register (FRSV0)

All bits in the FRSV0 register read 0 and are not writable.

28.3.2.5 Flash Configuration Register (FCNFG)

The FCNFG register enables the Flash command complete interrupt and forces ECC faults on Flash array read access from the CPU.

Offset Module Base + 0x0004

	7	6	5	4	3	2	1	0
R	CCIE	0	0	IGNSF	0	0	FDFD	FSFD
W								
Reset	0	0	0	0	0	0	0	0

= Unimplemented or Reserved

Figure 28-9. Flash Configuration Register (FCNFG)

CCIE, IGNSF, FDFD, and FSFD bits are readable and writable while remaining bits read 0 and are not writable.

Table 28-13. FCNFG Field Descriptions

Field	Description
7 CCIE	**Command Complete Interrupt Enable** — The CCIE bit controls interrupt generation when a Flash command has completed. 0 Command complete interrupt disabled 1 An interrupt will be requested whenever the CCIF flag in the FSTAT register is set (see Section 28.3.2.7)
4 IGNSF	**Ignore Single Bit Fault** — The IGNSF controls single bit fault reporting in the FERSTAT register (see Section 28.3.2.8). 0 All single bit faults detected during array reads are reported 1 Single bit faults detected during array reads are not reported and the single bit fault interrupt will not be generated
1 FDFD	**Force Double Bit Fault Detect** — The FDFD bit allows the user to simulate a double bit fault during Flash array read operations and check the associated interrupt routine. The FDFD bit is cleared by writing a 0 to FDFD. 0 Flash array read operations will set the DFDIF flag in the FERSTAT register only if a double bit fault is detected 1 Any Flash array read operation will force the DFDIF flag in the FERSTAT register to be set (see Section 28.3.2.7) and an interrupt will be generated as long as the DFDIE interrupt enable in the FERCNFG register is set (see Section 28.3.2.6)
0 FSFD	**Force Single Bit Fault Detect** — The FSFD bit allows the user to simulate a single bit fault during Flash array read operations and check the associated interrupt routine. The FSFD bit is cleared by writing a 0 to FSFD. 0 Flash array read operations will set the SFDIF flag in the FERSTAT register only if a single bit fault is detected 1 Flash array read operation will force the SFDIF flag in the FERSTAT register to be set (see Section 28.3.2.7) and an interrupt will be generated as long as the SFDIE interrupt enable in the FERCNFG register is set (see Section 28.3.2.6)

28.3.2.6 Flash Error Configuration Register (FERCNFG)

The FERCNFG register enables the Flash error interrupts for the FERSTAT flags.

Offset Module Base + 0x0005

	7	6	5	4	3	2	1	0
R	0	0	0	0	0	0	DFDIE	SFDIE
W								
Reset	0	0	0	0	0	0	0	0

= Unimplemented or Reserved

Figure 28-10. Flash Error Configuration Register (FERCNFG)

All assigned bits in the FERCNFG register are readable and writable.

Table 28-14. FERCNFG Field Descriptions

Field	Description
1 DFDIE	**Double Bit Fault Detect Interrupt Enable** — The DFDIE bit controls interrupt generation when a double bit fault is detected during a Flash block read operation. 0 DFDIF interrupt disabled 1 An interrupt will be requested whenever the DFDIF flag is set (see Section 28.3.2.8)
0 SFDIE	**Single Bit Fault Detect Interrupt Enable** — The SFDIE bit controls interrupt generation when a single bit fault is detected during a Flash block read operation. 0 SFDIF interrupt disabled whenever the SFDIF flag is set (see Section 28.3.2.8) 1 An interrupt will be requested whenever the SFDIF flag is set (see Section 28.3.2.8)

28.3.2.7 Flash Status Register (FSTAT)

The FSTAT register reports the operational status of the Flash module.

Offset Module Base + 0x0006

	7	6	5	4	3	2	1	0
R	CCIF	0	ACCERR	FPVIOL	MGBUSY	RSVD	MGSTAT[1:0]	
W								
Reset	1	0	0	0	0	0	0[1]	0[1]

= Unimplemented or Reserved

Figure 28-11. Flash Status Register (FSTAT)

[1] Reset value can deviate from the value shown if a double bit fault is detected during the reset sequence (see Section 28.6).

CCIF, ACCERR, and FPVIOL bits are readable and writable, MGBUSY and MGSTAT bits are readable but not writable, while remaining bits read 0 and are not writable.

Table 28-15. FSTAT Field Descriptions

Field	Description
7 CCIF	**Command Complete Interrupt Flag** — The CCIF flag indicates that a Flash command has completed. The CCIF flag is cleared by writing a 1 to CCIF to launch a command and CCIF will stay low until command completion or command violation. 0 Flash command in progress 1 Flash command has completed
5 ACCERR	**Flash Access Error Flag** — The ACCERR bit indicates an illegal access has occurred to the Flash memory caused by either a violation of the command write sequence (see Section 28.4.4.2) or issuing an illegal Flash command. While ACCERR is set, the CCIF flag cannot be cleared to launch a command. The ACCERR bit is cleared by writing a 1 to ACCERR. Writing a 0 to the ACCERR bit has no effect on ACCERR. 0 No access error detected 1 Access error detected
4 FPVIOL	**Flash Protection Violation Flag** —The FPVIOL bit indicates an attempt was made to program or erase an address in a protected area of P-Flash or EEPROM memory during a command write sequence. The FPVIOL bit is cleared by writing a 1 to FPVIOL. Writing a 0 to the FPVIOL bit has no effect on FPVIOL. While FPVIOL is set, it is not possible to launch a command or start a command write sequence. 0 No protection violation detected 1 Protection violation detected
3 MGBUSY	**Memory Controller Busy Flag** — The MGBUSY flag reflects the active state of the Memory Controller. 0 Memory Controller is idle 1 Memory Controller is busy executing a Flash command (CCIF = 0)
2 RSVD	**Reserved Bit** — This bit is reserved and always reads 0.
1–0 MGSTAT[1:0]	**Memory Controller Command Completion Status Flag** — One or more MGSTAT flag bits are set if an error is detected during execution of a Flash command or during the Flash reset sequence. See Section 28.4.6, “Flash Command Description,” and Section 28.6, “Initialization” for details.

28.3.2.8 Flash Error Status Register (FERSTAT)

The FERSTAT register reflects the error status of internal Flash operations.

Offset Module Base + 0x0007

	7	6	5	4	3	2	1	0
R	0	0	0	0	0	0	DFDIF	SFDIF
W								
Reset	0	0	0	0	0	0	0	0

= Unimplemented or Reserved

Figure 28-12. Flash Error Status Register (FERSTAT)

All flags in the FERSTAT register are readable and only writable to clear the flag.

Table 28-16. FERSTAT Field Descriptions

Field	Description
1 DFDIF	**Double Bit Fault Detect Interrupt Flag** — The setting of the DFDIF flag indicates that a double bit fault was detected in the stored parity and data bits during a Flash array read operation or that a Flash array read operation returning invalid data was attempted on a Flash block that was under a Flash command operation.[1] The DFDIF flag is cleared by writing a 1 to DFDIF. Writing a 0 to DFDIF has no effect on DFDIF.[2] 0 No double bit fault detected 1 Double bit fault detected or a Flash array read operation returning invalid data was attempted while command running
0 SFDIF	**Single Bit Fault Detect Interrupt Flag** — With the IGNSF bit in the FCNFG register clear, the SFDIF flag indicates that a single bit fault was detected in the stored parity and data bits during a Flash array read operation or that a Flash array read operation returning invalid data was attempted on a Flash block that was under a Flash command operation.[1] The SFDIF flag is cleared by writing a 1 to SFDIF. Writing a 0 to SFDIF has no effect on SFDIF. 0 No single bit fault detected 1 Single bit fault detected and corrected or a Flash array read operation returning invalid data was attempted while command running

1 The single bit fault and double bit fault flags are mutually exclusive for parity errors (an ECC fault occurrence can be either single fault or double fault but never both). A simultaneous access collision (Flash array read operation returning invalid data attempted while command running) is indicated when both SFDIF and DFDIF flags are high.

2 There is a one cycle delay in storing the ECC DFDIF and SFDIF fault flags in this register. At least one NOP is required after a flash memory read before checking FERSTAT for the occurrence of ECC errors.

28.3.2.9 P-Flash Protection Register (FPROT)

The FPROT register defines which P-Flash sectors are protected against program and erase operations.

Offset Module Base + 0x0008

	7	6	5	4	3	2	1	0
R	FPOPEN	RNV6	FPHDIS	FPHS[1:0]		FPLDIS	FPLS[1:0]	
W								
Reset	F[1]	F[1]	F[1]	F[1]	F[1]	F[1]	F[1]	F[1]

= Unimplemented or Reserved

Figure 28-13. Flash Protection Register (FPROT)

1 Loaded from IFR Flash configuration field, during reset sequence.

The (unreserved) bits of the FPROT register are writable with the restriction that the size of the protected region can only be increased (see Section 28.3.2.9.1, “P-Flash Protection Restrictions,” and Table 28-21).

During the reset sequence, the FPROT register is loaded with the contents of the P-Flash protection byte in the Flash configuration field at global address 0x3_FF0C located in P-Flash memory (see Table 28-4) as indicated by reset condition ‘F’ in Figure 28-13. To change the P-Flash protection that will be loaded during the reset sequence, the upper sector of the P-Flash memory must be unprotected, then the P-Flash protection byte must be reprogrammed. If a double bit fault is detected while reading the P-Flash phrase containing the P-Flash protection byte during the reset sequence, the FPOPEN bit will be cleared and remaining bits in the FPROT register will be set to leave the P-Flash memory fully protected.

Trying to alter data in any protected area in the P-Flash memory will result in a protection violation error and the FPVIOL bit will be set in the FSTAT register. The block erase of a P-Flash block is not possible if any of the P-Flash sectors contained in the same P-Flash block are protected.

Table 28-17. FPROT Field Descriptions

Field	Description
7 FPOPEN	**Flash Protection Operation Enable** — The FPOPEN bit determines the protection function for program or erase operations as shown in Table 28-18 for the P-Flash block. 0 When FPOPEN is clear, the FPHDIS and FPLDIS bits define unprotected address ranges as specified by the corresponding FPHS and FPLS bits 1 When FPOPEN is set, the FPHDIS and FPLDIS bits enable protection for the address range specified by the corresponding FPHS and FPLS bits
6 RNV[6]	**Reserved Nonvolatile Bit** — The RNV bit should remain in the erased state for future enhancements.
5 FPHDIS	**Flash Protection Higher Address Range Disable** — The FPHDIS bit determines whether there is a protected/unprotected area in a specific region of the P-Flash memory ending with global address 0x3_FFFF. 0 Protection/Unprotection enabled 1 Protection/Unprotection disabled
4–3 FPHS[1:0]	**Flash Protection Higher Address Size** — The FPHS bits determine the size of the protected/unprotected area in P-Flash memory as shown inTable 28-19. The FPHS bits can only be written to while the FPHDIS bit is set.
2 FPLDIS	**Flash Protection Lower Address Range Disable** — The FPLDIS bit determines whether there is a protected/unprotected area in a specific region of the P-Flash memory beginning with global address 0x3_8000. 0 Protection/Unprotection enabled 1 Protection/Unprotection disabled
1–0 FPLS[1:0]	**Flash Protection Lower Address Size** — The FPLS bits determine the size of the protected/unprotected area in P-Flash memory as shown in Table 28-20. The FPLS bits can only be written to while the FPLDIS bit is set.

Table 28-18. P-Flash Protection Function

FPOPEN	FPHDIS	FPLDIS	Function[1]
1	1	1	No P-Flash Protection
1	1	0	Protected Low Range
1	0	1	Protected High Range
1	0	0	Protected High and Low Ranges
0	1	1	Full P-Flash Memory Protected
0	1	0	Unprotected Low Range
0	0	1	Unprotected High Range
0	0	0	Unprotected High and Low Ranges

[1] For range sizes, refer to Table 28-19 and Table 28-20.

Table 28-19. P-Flash Protection Higher Address Range

FPHS[1:0]	Global Address Range	Protected Size
00	0x3_F800–0x3_FFFF	2 Kbytes
01	0x3_F000–0x3_FFFF	4 Kbytes
10	0x3_E000–0x3_FFFF	8 Kbytes
11	0x3_C000–0x3_FFFF	16 Kbytes

Table 28-20. P-Flash Protection Lower Address Range

FPLS[1:0]	Global Address Range	Protected Size
00	0x3_8000–0x3_83FF	1 Kbyte
01	0x3_8000–0x3_87FF	2 Kbytes
10	0x3_8000–0x3_8FFF	4 Kbytes
11	0x3_8000–0x3_9FFF	8 Kbytes

All possible P-Flash protection scenarios are shown in Figure 28-14 . Although the protection scheme is loaded from the Flash memory at global address 0x3_FF0C during the reset sequence, it can be changed by the user. The P-Flash protection scheme can be used by applications requiring reprogramming in single chip mode while providing as much protection as possible if reprogramming is not required.

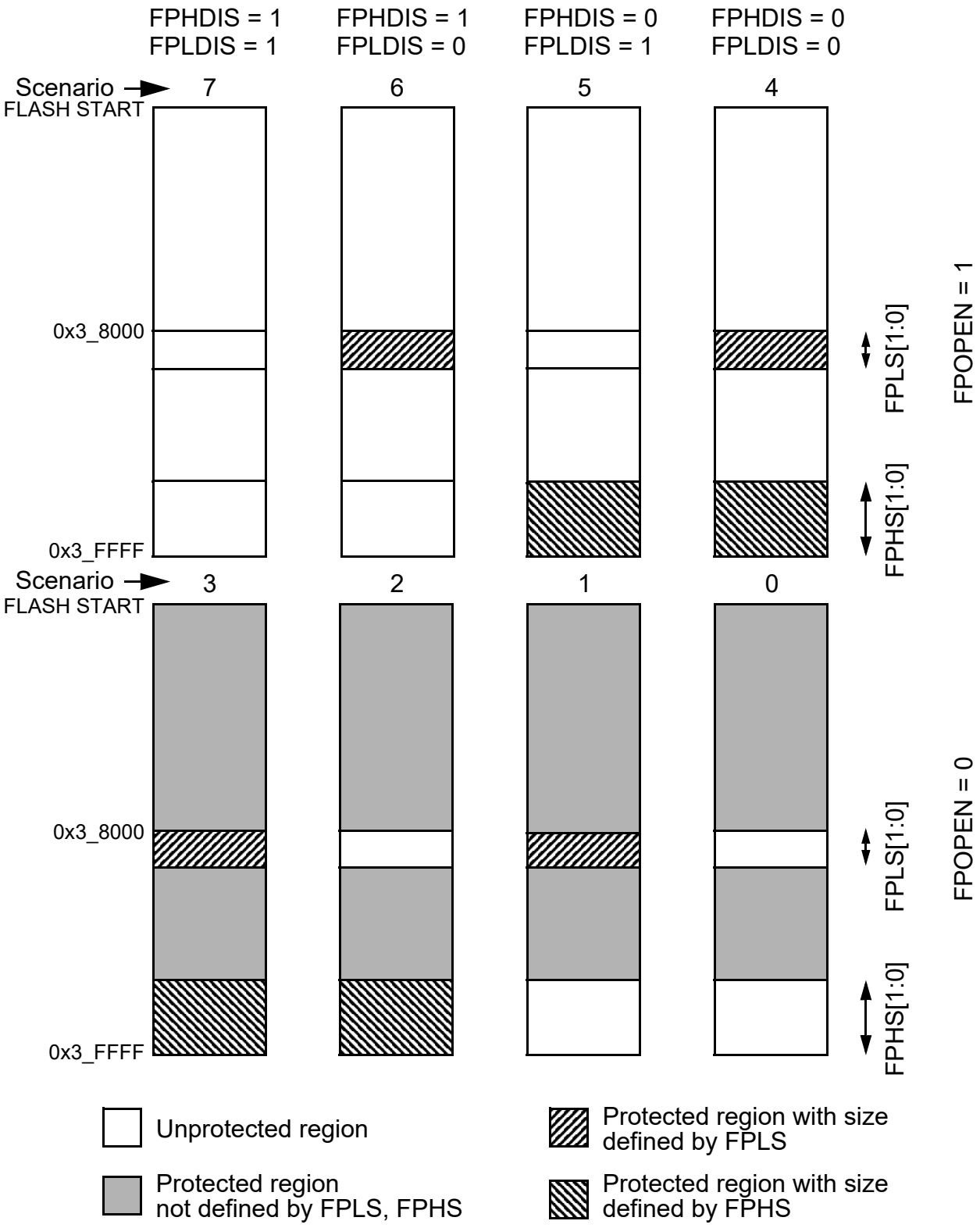

Figure 28-14. P-Flash Protection Scenarios

28.3.2.9.1 P-Flash Protection Restrictions

The general guideline is that P-Flash protection can only be added and not removed. Table 28-21 specifies all valid transitions between P-Flash protection scenarios. Any attempt to write an invalid scenario to the FPROT register will be ignored. The contents of the FPROT register reflect the active protection scenario. See the FPHS and FPLS bit descriptions for additional restrictions.

Table 28-21. P-Flash Protection Scenario Transitions

From Protection Scenario	To Protection Scenario[1]							
	0	1	2	3	4	5	6	7
0	X	X	X	X				
1		X		X				
2			X	X				
3				X				
4				X	X			
5			X	X	X	X		
6		X		X	X		X	
7	X	X	X	X	X	X	X	X

[1] Allowed transitions marked with X, see Figure 28-14 for a definition of the scenarios.

28.3.2.10 EEPROM Protection Register (EEPROT)

The EEPROT register defines which EEPROM sectors are protected against program and erase operations.

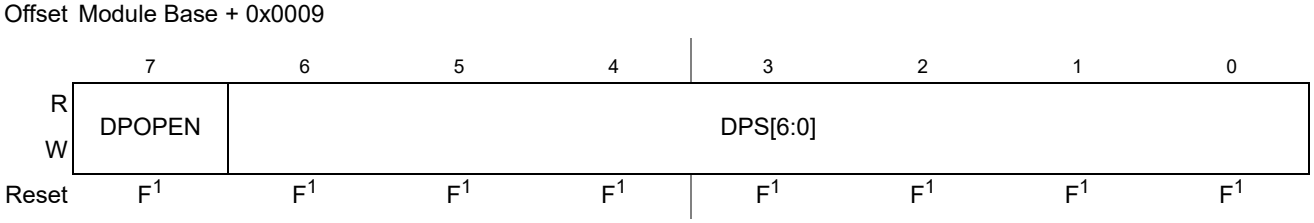

Figure 28-15. EEPROM Protection Register (EEPROT)

[1] Loaded from IFR Flash configuration field, during reset sequence.

The (unreserved) bits of the EEPROT register are writable with the restriction that protection can be added but not removed. Writes must increase the DPS value and the DPOPEN bit can only be written from 1 (protection disabled) to 0 (protection enabled). If the DPOPEN bit is set, the state of the DPS bits is irrelevant.

During the reset sequence, fields DPOPEN and DPS of the EEPROT register are loaded with the contents of the EEPROM protection byte in the Flash configuration field at global address 0x3_FF0D located in

P-Flash memory (see Table 28-4) as indicated by reset condition F in Table 28-23. To change the EEPROM protection that will be loaded during the reset sequence, the P-Flash sector containing the EEPROM protection byte must be unprotected, then the EEPROM protection byte must be programmed. If a double bit fault is detected while reading the P-Flash phrase containing the EEPROM protection byte during the reset sequence, the DPOPEN bit will be cleared and DPS bits will be set to leave the EEPROM memory fully protected.

Trying to alter data in any protected area in the EEPROM memory will result in a protection violation error and the FPVIOL bit will be set in the FSTAT register. Block erase of the EEPROM memory is not possible if any of the EEPROM sectors are protected.

Table 28-22. EEPROT Field Descriptions

Field	Description
7 DPOPEN	EEPROM Protection Control 0 Enables EEPROM memory protection from program and erase with protected address range defined by DPS bits 1 Disables EEPROM memory protection from program and erase
6–0 DPS[6:0]	**EEPROM Protection Size** — The DPS[6:0] bits determine the size of the protected area in the EEPROM memory, this size increase in step of 32 bytes, as shown in Table 28-23 .

Table 28-23. EEPROM Protection Address Range

DPS[6:0]	Global Address Range	Protected Size
0000000	0x0_0400 – 0x0_041F	32 bytes
0000001	0x0_0400 – 0x0_043F	64 bytes
0000010	0x0_0400 – 0x0_045F	96 bytes
0000011	0x0_0400 – 0x0_047F	128 bytes
0000100	0x0_0400 – 0x0_049F	160 bytes
0000101	0x0_0400 – 0x0_04BF	192 bytes
The Protection Size goes on enlarging in step of 32 bytes, for each DPS value increasing of one. . . .		
1011111 - to - 1111111	0x0_0400 – 0x0_0FFF	3,072 bytes

28.3.2.11 Flash Common Command Object Register (FCCOB)

The FCCOB is an array of six words addressed via the CCOBIX index found in the FCCOBIX register. Byte wide reads and writes are allowed to the FCCOB register.

Offset Module Base + 0x000A

	7	6	5	4	3	2	1	0
R W	CCOB[15:8]							
Reset	0	0	0	0	0	0	0	0

Figure 28-16. Flash Common Command Object High Register (FCCOBHI)

Offset Module Base + 0x000B

	7	6	5	4	3	2	1	0
R W	CCOB[7:0]							
Reset	0	0	0	0	0	0	0	0

Figure 28-17. Flash Common Command Object Low Register (FCCOBLO)

28.3.2.11.1 FCCOB - NVM Command Mode

NVM command mode uses the indexed FCCOB register to provide a command code and its relevant parameters to the Memory Controller. The user first sets up all required FCCOB fields and then initiates the command's execution by writing a 1 to the CCIF bit in the FSTAT register (a 1 written by the user clears the CCIF command completion flag to 0). When the user clears the CCIF bit in the FSTAT register all FCCOB parameter fields are locked and cannot be changed by the user until the command completes (as evidenced by the Memory Controller returning CCIF to 1). Some commands return information to the FCCOB register array.

The generic format for the FCCOB parameter fields in NVM command mode is shown in Table 28-24. The return values are available for reading after the CCIF flag in the FSTAT register has been returned to 1 by the Memory Controller. Writes to the unimplemented parameter fields (CCOBIX = 110 and CCOBIX = 111) are ignored with reads from these fields returning 0x0000.

Table 28-24 shows the generic Flash command format. The high byte of the first word in the CCOB array contains the command code, followed by the parameters for this specific Flash command. For details on the FCCOB settings required by each command, see the Flash command descriptions in Section 28.4.6.

Table 28-24. FCCOB - NVM Command Mode (Typical Usage)

CCOBIX[2:0]	Byte	FCCOB Parameter Fields (NVM Command Mode)
000	HI	FCMD[7:0] defining Flash command
	LO	6'h0, Global address [17:16]
001	HI	Global address [15:8]
	LO	Global address [7:0]

Table 28-24. FCCOB - NVM Command Mode (Typical Usage)

CCOBIX[2:0]	Byte	FCCOB Parameter Fields (NVM Command Mode)
010	HI	Data 0 [15:8]
	LO	Data 0 [7:0]
011	HI	Data 1 [15:8]
	LO	Data 1 [7:0]
100	HI	Data 2 [15:8]
	LO	Data 2 [7:0]
101	HI	Data 3 [15:8]
	LO	Data 3 [7:0]

28.3.2.12 Flash Reserved1 Register (FRSV1)

This Flash register is reserved for factory testing.

Offset Module Base + 0x000C

	7	6	5	4	3	2	1	0
R	0	0	0	0	0	0	0	0
W								
Reset	0	0	0	0	0	0	0	0

= Unimplemented or Reserved

Figure 28-18. Flash Reserved1 Register (FRSV1)

All bits in the FRSV1 register read 0 and are not writable.

28.3.2.13 Flash Reserved2 Register (FRSV2)

This Flash register is reserved for factory testing.

Offset Module Base + 0x000D

	7	6	5	4	3	2	1	0
R	0	0	0	0	0	0	0	0
W								
Reset	0	0	0	0	0	0	0	0

= Unimplemented or Reserved

Figure 28-19. Flash Reserved2 Register (FRSV2)

All bits in the FRSV2 register read 0 and are not writable.

28.3.2.14 Flash Reserved3 Register (FRSV3)

This Flash register is reserved for factory testing.

Offset Module Base + 0x000E

	7	6	5	4	3	2	1	0
R	0	0	0	0	0	0	0	0
W								
Reset	0	0	0	0	0	0	0	0

= Unimplemented or Reserved

Figure 28-20. Flash Reserved3 Register (FRSV3)

All bits in the FRSV3 register read 0 and are not writable.

28.3.2.15 Flash Reserved4 Register (FRSV4)

This Flash register is reserved for factory testing.

Offset Module Base + 0x000F

	7	6	5	4	3	2	1	0
R	0	0	0	0	0	0	0	0
W								
Reset	0	0	0	0	0	0	0	0

= Unimplemented or Reserved

Figure 28-21. Flash Reserved4 Register (FRSV4)

All bits in the FRSV4 register read 0 and are not writable.

28.3.2.16 Flash Option Register (FOPT)

The FOPT register is the Flash option register.

Offset Module Base + 0x0010

	7	6	5	4	3	2	1	0
R	NV[7:0]							
W								
Reset	F[1]	F[1]	F[1]	F[1]	F[1]	F[1]	F[1]	F[1]

= Unimplemented or Reserved

Figure 28-22. Flash Option Register (FOPT)

1 Loaded from IFR Flash configuration field, during reset sequence.

All bits in the FOPT register are readable but are not writable.

During the reset sequence, the FOPT register is loaded from the Flash nonvolatile byte in the Flash configuration field at global address 0x3_FF0E located in P-Flash memory (see Table 28-4) as indicated by reset condition F in Figure 28-22. If a double bit fault is detected while reading the P-Flash phrase containing the Flash nonvolatile byte during the reset sequence, all bits in the FOPT register will be set.

Table 28-25. FOPT Field Descriptions

Field	Description
7–0 NV[7:0]	**Nonvolatile Bits** — The NV[7:0] bits are available as nonvolatile bits. Refer to the device user guide for proper use of the NV bits.

28.3.2.17 Flash Reserved5 Register (FRSV5)

This Flash register is reserved for factory testing.

Offset Module Base + 0x0011

	7	6	5	4	3	2	1	0
R	0	0	0	0	0	0	0	0
W								
Reset	0	0	0	0	0	0	0	0

= Unimplemented or Reserved

Figure 28-23. Flash Reserved5 Register (FRSV5)

All bits in the FRSV5 register read 0 and are not writable.

28.3.2.18 Flash Reserved6 Register (FRSV6)

This Flash register is reserved for factory testing.

Offset Module Base + 0x0012

	7	6	5	4	3	2	1	0
R	0	0	0	0	0	0	0	0
W								
Reset	0	0	0	0	0	0	0	0

= Unimplemented or Reserved

Figure 28-24. Flash Reserved6 Register (FRSV6)

All bits in the FRSV6 register read 0 and are not writable.

28.3.2.19 Flash Reserved7 Register (FRSV7)

This Flash register is reserved for factory testing.

Offset Module Base + 0x0013

	7	6	5	4	3	2	1	0
R	0	0	0	0	0	0	0	0
W								
Reset	0	0	0	0	0	0	0	0

= Unimplemented or Reserved

Figure 28-25. Flash Reserved7 Register (FRSV7)

All bits in the FRSV7 register read 0 and are not writable.

28.4 Functional Description

28.4.1 Modes of Operation

The FTMRG96K1 module provides the modes of operation normal and special . The operating mode is determined by module-level inputs and affects the FCLKDIV, FCNFG, and EEPROT registers (see Table 28-27).

28.4.2 IFR Version ID Word

The version ID word is stored in the IFR at address 0x0_40B6. The contents of the word are defined in Table 28-26.

Table 28-26. IFR Version ID Fields

[15:4]	[3:0]
Reserved	VERNUM

- VERNUM: Version number. The first version is number 0b_0001 with both 0b_0000 and 0b_1111 meaning ‘none’.

28.4.3 Internal NVM resource (NVMRES)

IFR is an internal NVM resource readable by CPU , when NVMRES is active. The IFR fields are shown in Table 28-5.

The NVMRES global address map is shown in Table 28-6.

28.4.4 Flash Command Operations

Flash command operations are used to modify Flash memory contents.

The next sections describe:

- How to write the FCLKDIV register that is used to generate a time base (FCLK) derived from BUSCLK for Flash program and erase command operations
- The command write sequence used to set Flash command parameters and launch execution
- Valid Flash commands available for execution, according to MCU functional mode and MCU security state.

28.4.4.1 Writing the FCLKDIV Register

Prior to issuing any Flash program or erase command after a reset, the user is required to write the FCLKDIV register to divide BUSCLK down to a target FCLK of 1 MHz. Table 28-8 shows recommended values for the FDIV field based on BUSCLK frequency.

NOTE

Programming or erasing the Flash memory cannot be performed if the bus clock runs at less than 0.8 MHz. Setting FDIV too high can destroy the Flash memory due to overstress. Setting FDIV too low can result in incomplete programming or erasure of the Flash memory cells.

When the FCLKDIV register is written, the FDIVLD bit is set automatically. If the FDIVLD bit is 0, the FCLKDIV register has not been written since the last reset. If the FCLKDIV register has not been written, any Flash program or erase command loaded during a command write sequence will not execute and the ACCERR bit in the FSTAT register will set.

28.4.4.2 Command Write Sequence

The Memory Controller will launch all valid Flash commands entered using a command write sequence.

Before launching a command, the ACCERR and FPVIOL bits in the FSTAT register must be clear (see Section 28.3.2.7) and the CCIF flag should be tested to determine the status of the current command write sequence. If CCIF is 0, the previous command write sequence is still active, a new command write sequence cannot be started, and all writes to the FCCOB register are ignored.

28.4.4.2.1 Define FCCOB Contents

The FCCOB parameter fields must be loaded with all required parameters for the Flash command being executed. Access to the FCCOB parameter fields is controlled via the CCOBIX bits in the FCCOBIX register (see Section 28.3.2.3).

The contents of the FCCOB parameter fields are transferred to the Memory Controller when the user clears the CCIF command completion flag in the FSTAT register (writing 1 clears the CCIF to 0). The CCIF flag will remain clear until the Flash command has completed. Upon completion, the Memory Controller will return CCIF to 1 and the FCCOB register will be used to communicate any results. The flow for a generic command write sequence is shown in Figure 28-26.

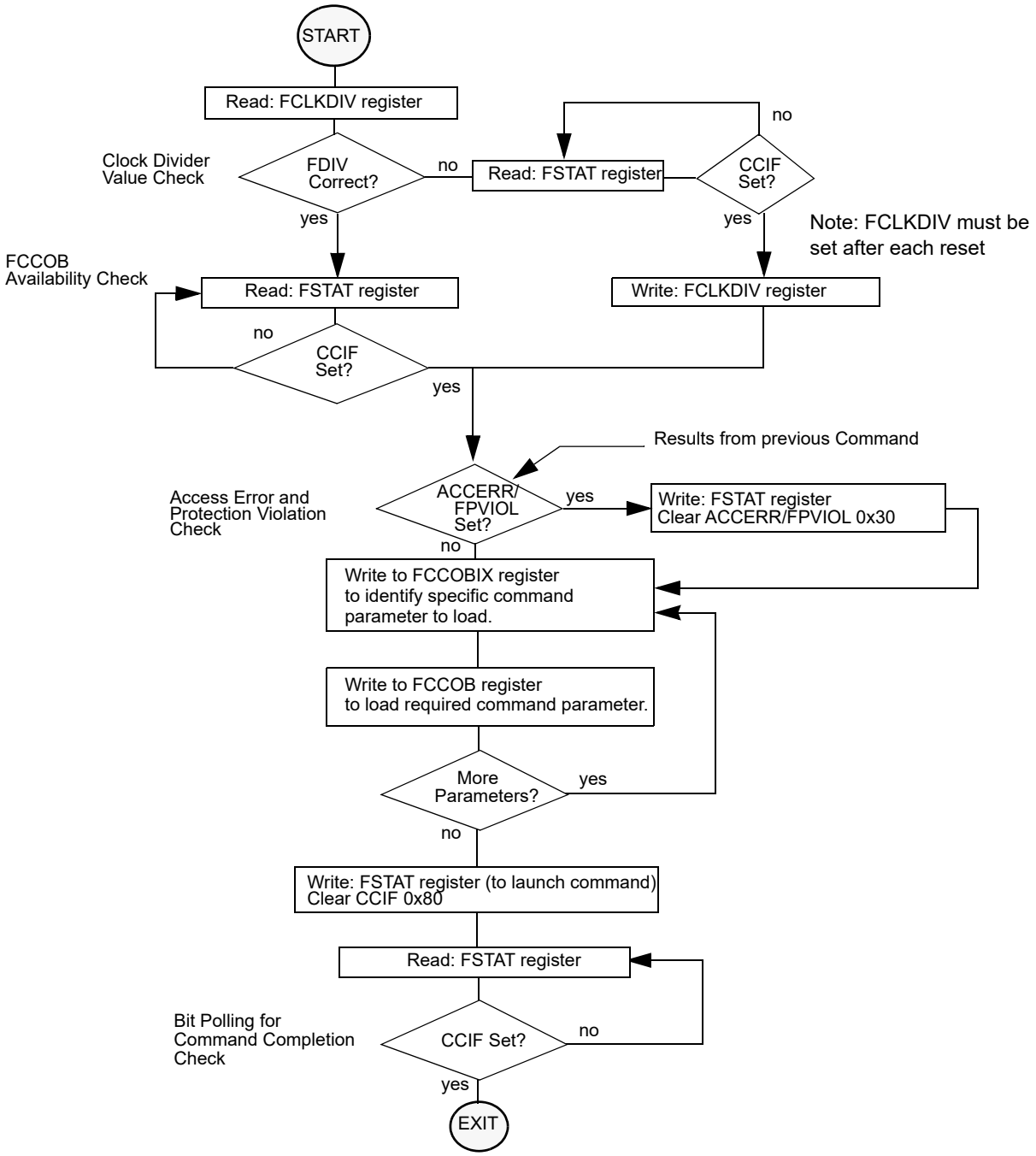

Figure 28-26. Generic Flash Command Write Sequence Flowchart

28.4.4.3 Valid Flash Module Commands

Table 28-27 present the valid Flash commands, as enabled by the combination of the functional MCU mode (Normal SingleChip NS, Special Singlechip SS) with the MCU security state (Unsecured, Secured).

Special Singlechip mode is selected by input mmc_ss_mode_ts2 asserted. MCU Secured state is selected by input mmc_secure input asserted.

Table 28-27. Flash Commands by Mode and Security State

FCMD	Command	Unsecured		Secured	
		NS[1]	SS[2]	NS[3]	SS[4]
0x01	Erase Verify All Blocks	*	*	*	*
0x02	Erase Verify Block	*	*	*	*
0x03	Erase Verify P-Flash Section	*	*	*	
0x04	Read Once	*	*	*	
0x06	Program P-Flash	*	*	*	
0x07	Program Once	*	*	*	
0x08	Erase All Blocks		*		*
0x09	Erase Flash Block	*	*	*	
0x0A	Erase P-Flash Sector	*	*	*	
0x0B	Unsecure Flash		*		*
0x0C	Verify Backdoor Access Key	*		*	
0x0D	Set User Margin Level	*	*	*	
0x0E	Set Field Margin Level		*		
0x10	Erase Verify EEPROM Section	*	*	*	
0x11	Program EEPROM	*	*	*	
0x12	Erase EEPROM Sector	*	*	*	

1 Unsecured Normal Single Chip mode
2 Unsecured Special Single Chip mode.
3 Secured Normal Single Chip mode.
4 Secured Special Single Chip mode.

28.4.4.4 P-Flash Commands

Table 28-28 summarizes the valid P-Flash commands along with the effects of the commands on the P-Flash block and other resources within the Flash module.

Table 28-28. P-Flash Commands

FCMD	Command	Function on P-Flash Memory
0x01	Erase Verify All Blocks	Verify that all P-Flash (and EEPROM) blocks are erased.

Table 28-28. P-Flash Commands

FCMD	Command	Function on P-Flash Memory
0x02	Erase Verify Block	Verify that a P-Flash block is erased.
0x03	Erase Verify P-Flash Section	Verify that a given number of words starting at the address provided are erased.
0x04	Read Once	Read a dedicated 64 byte field in the nonvolatile information register in P-Flash block that was previously programmed using the Program Once command.
0x06	Program P-Flash	Program a phrase in a P-Flash block.
0x07	Program Once	Program a dedicated 64 byte field in the nonvolatile information register in P-Flash block that is allowed to be programmed only once.
0x08	Erase All Blocks	Erase all P-Flash (and EEPROM) blocks. An erase of all Flash blocks is only possible when the FPLDIS, FPHDIS, and FPOPEN bits in the FPROT register and the DPOPEN bit in the EEPROT register are set prior to launching the command.
0x09	Erase Flash Block	Erase a P-Flash (or EEPROM) block. An erase of the full P-Flash block is only possible when FPLDIS, FPHDIS and FPOPEN bits in the FPROT register are set prior to launching the command.
0x0A	Erase P-Flash Sector	Erase all bytes in a P-Flash sector.
0x0B	Unsecure Flash	Supports a method of releasing MCU security by erasing all P-Flash (and EEPROM) blocks and verifying that all P-Flash (and EEPROM) blocks are erased.
0x0C	Verify Backdoor Access Key	Supports a method of releasing MCU security by verifying a set of security keys.
0x0D	Set User Margin Level	Specifies a user margin read level for all P-Flash blocks.
0x0E	Set Field Margin Level	Specifies a field margin read level for all P-Flash blocks (special modes only).

28.4.4.5 EEPROM Commands

Table 28-29 summarizes the valid EEPROM commands along with the effects of the commands on the EEPROM block.

Table 28-29. EEPROM Commands

FCMD	Command	Function on EEPROM Memory
0x01	Erase Verify All Blocks	Verify that all EEPROM (and P-Flash) blocks are erased.
0x02	Erase Verify Block	Verify that the EEPROM block is erased.

Table 28-29. EEPROM Commands

FCMD	Command	Function on EEPROM Memory
0x08	Erase All Blocks	Erase all EEPROM (and P-Flash) blocks. An erase of all Flash blocks is only possible when the FPLDIS, FPHDIS, and FPOPEN bits in the FPROT register and the DPOPEN bit in the EEPROT register are set prior to launching the command.
0x09	Erase Flash Block	Erase a EEPROM (or P-Flash) block. An erase of the full EEPROM block is only possible when DPOPEN bit in the EEPROT register is set prior to launching the command.
0x0B	Unsecure Flash	Supports a method of releasing MCU security by erasing all EEPROM (and P-Flash) blocks and verifying that all EEPROM (and P-Flash) blocks are erased.
0x0D	Set User Margin Level	Specifies a user margin read level for the EEPROM block.
0x0E	Set Field Margin Level	Specifies a field margin read level for the EEPROM block (special modes only).
0x10	Erase Verify EEPROM Section	Verify that a given number of words starting at the address provided are erased.
0x11	Program EEPROM	Program up to four words in the EEPROM block.
0x12	Erase EEPROM Sector	Erase all bytes in a sector of the EEPROM block.

28.4.5 Allowed Simultaneous P-Flash and EEPROM Operations

Only the operations marked ‘OK’ in Table 28-30 are permitted to be run simultaneously on the Program Flash and EEPROM blocks. Some operations cannot be executed simultaneously because certain hardware resources are shared by the two memories. The priority has been placed on permitting Program Flash reads while program and erase operations execute on the EEPROM, providing read (P-Flash) while write (EEPROM) functionality.

Table 28-30. Allowed P-Flash and EEPROM Simultaneous Operations

	EEPROM				
Program Flash	**Read**	**Margin Read[1]**	**Program**	**Sector Erase**	**Mass Erase[2]**
Read		OK	OK	OK	
Margin Read[1]					
Program					
Sector Erase					
Mass Erase[2]					OK

1 A ‘Margin Read’ is any read after executing the margin setting commands ‘Set User Margin Level’ or ‘Set Field Margin Level’ with anything but the ‘normal’ level specified. See the Note on margin settings in Section 28.4.6.12 and Section 28.4.6.13.

2 The ‘Mass Erase’ operations are commands ‘Erase All Blocks’ and ‘Erase Flash Block’

28.4.6 Flash Command Description

This section provides details of all available Flash commands launched by a command write sequence. The ACCERR bit in the FSTAT register will be set during the command write sequence if any of the following illegal steps are performed, causing the command not to be processed by the Memory Controller:

- Starting any command write sequence that programs or erases Flash memory before initializing the FCLKDIV register
- Writing an invalid command as part of the command write sequence
- For additional possible errors, refer to the error handling table provided for each command

If a Flash block is read during execution of an algorithm (CCIF = 0) on that same block, the read operation will return invalid data if both flags SFDIF and DFDIF are set. If the SFDIF or DFDIF flags were not previously set when the invalid read operation occurred, both the SFDIF and DFDIF flags will be set.

If the ACCERR or FPVIOL bits are set in the FSTAT register, the user must clear these bits before starting any command write sequence (see Section 28.3.2.7).

CAUTION

A Flash word or phrase must be in the erased state before being programmed. Cumulative programming of bits within a Flash word or phrase is not allowed.

28.4.6.1 Erase Verify All Blocks Command

The Erase Verify All Blocks command will verify that all P-Flash and EEPROM blocks have been erased.

Table 28-31. Erase Verify All Blocks Command FCCOB Requirements

CCOBIX[2:0]	FCCOB Parameters	
000	0x01	Not required

Upon clearing CCIF to launch the Erase Verify All Blocks command, the Memory Controller will verify that the entire Flash memory space is erased. The CCIF flag will set after the Erase Verify All Blocks operation has completed. If all blocks are not erased, it means blank check failed, both MGSTAT bits will be set.

Table 28-32. Erase Verify All Blocks Command Error Handling

Register	Error Bit	Error Condition
FSTAT	ACCERR	Set if CCOBIX[2:0] != 000 at command launch
	FPVIOL	None
	MGSTAT1	Set if any errors have been encountered during the read[1] or if blank check failed .
	MGSTAT0	Set if any non-correctable errors have been encountered during the read[1] or if blank check failed.

[1] As found in the memory map for FTMRG96K1.

28.4.6.2 Erase Verify Block Command

The Erase Verify Block command allows the user to verify that an entire P-Flash or EEPROM block has been erased. The FCCOB FlashBlockSelectionCode[1:0] bits determine which block must be verified.

Table 28-33. Erase Verify Block Command FCCOB Requirements

CCOBIX[2:0]	FCCOB Parameters	
000	0x02	Flash block selection code [1:0]. See Table 28-34

Table 28-34. Flash block selection code description

Selection code[1:0]	Flash block to be verified
00	EEPROM
01	Invalid (ACCERR)
10	P-Flash
11	P-Flash

Upon clearing CCIF to launch the Erase Verify Block command, the Memory Controller will verify that the selected P-Flash or EEPROM block is erased. The CCIF flag will set after the Erase Verify Block operation has completed.If the block is not erased, it means blank check failed, both MGSTAT bits will be set.

Table 28-35. Erase Verify Block Command Error Handling

Register	Error Bit	Error Condition
FSTAT	ACCERR	Set if CCOBIX[2:0] != 000 at command launch
		Set if an invalid FlashBlockSelectionCode[1:0] is supplied[1]
	FPVIOL	None
	MGSTAT1	Set if any errors have been encountered during the read[2] or if blank check failed.
	MGSTAT0	Set if any non-correctable errors have been encountered during the read[2] or if blank check failed.

1 As defined by the memory map for FTMRG96K1.

2 As found in the memory map for FTMRG96K1.

28.4.6.3 Erase Verify P-Flash Section Command

The Erase Verify P-Flash Section command will verify that a section of code in the P-Flash memory is erased. The Erase Verify P-Flash Section command defines the starting point of the code to be verified and the number of phrases.

Table 28-36. Erase Verify P-Flash Section Command FCCOB Requirements

CCOBIX[2:0]	FCCOB Parameters	
000	0x03	Global address [17:16] of a P-Flash block
001	Global address [15:0] of the first phrase to be verified	
010	Number of phrases to be verified	

Upon clearing CCIF to launch the Erase Verify P-Flash Section command, the Memory Controller will verify the selected section of Flash memory is erased. The CCIF flag will set after the Erase Verify P-Flash Section operation has completed. If the section is not erased, it means blank check failed, both MGSTAT bits will be set.

Table 28-37. Erase Verify P-Flash Section Command Error Handling

Register	Error Bit	Error Condition
FSTAT	ACCERR	Set if CCOBIX[2:0] != 010 at command launch
		Set if command not available in current mode (see Table 28-27)
		Set if an invalid global address [17:0] is supplied see Table 28-3)[1]
		Set if a misaligned phrase address is supplied (global address [2:0] != 000)
		Set if the requested section crosses a the P-Flash address boundary
	FPVIOL	None
	MGSTAT1	Set if any errors have been encountered during the read[2] or if blank check failed.
	MGSTAT0	Set if any non-correctable errors have been encountered during the read[2] or if blank check failed.

1 As defined by the memory map for FTMRG96K1.

2 As found in the memory map for FTMRG96K1.

28.4.6.4 Read Once Command

The Read Once command provides read access to a reserved 64 byte field (8 phrases) located in the nonvolatile information register of P-Flash. The Read Once field is programmed using the Program Once command described in Section 28.4.6.6. The Read Once command must not be executed from the Flash block containing the Program Once reserved field to avoid code runaway.

Table 28-38. Read Once Command FCCOB Requirements

CCOBIX[2:0]	FCCOB Parameters	
000	0x04	Not Required

Table 28-38. Read Once Command FCCOB Requirements

CCOBIX[2:0]	FCCOB Parameters
001	Read Once phrase index (0x0000 - 0x0007)
010	Read Once word 0 value
011	Read Once word 1 value
100	Read Once word 2 value
101	Read Once word 3 value

Upon clearing CCIF to launch the Read Once command, a Read Once phrase is fetched and stored in the FCCOB indexed register. The CCIF flag will set after the Read Once operation has completed. Valid phrase index values for the Read Once command range from 0x0000 to 0x0007. During execution of the Read Once command, any attempt to read addresses within P-Flash block will return invalid data.

Table 28-39. Read Once Command Error Handling

Register	Error Bit	Error Condition
FSTAT	ACCERR	Set if CCOBIX[2:0] != 001 at command launch
		Set if command not available in current mode (see Table 28-27)
		Set if an invalid phrase index is supplied
	FPVIOL	None
	MGSTAT1	Set if any errors have been encountered during the read
	MGSTAT0	Set if any non-correctable errors have been encountered during the read

28.4.6.5 Program P-Flash Command

The Program P-Flash operation will program a previously erased phrase in the P-Flash memory using an embedded algorithm.

CAUTION

A P-Flash phrase must be in the erased state before being programmed. Cumulative programming of bits within a Flash phrase is not allowed.

Table 28-40. Program P-Flash Command FCCOB Requirements

CCOBIX[2:0]	FCCOB Parameters	
000	0x06	Global address [17:16] to identify P-Flash block
001	Global address [15:0] of phrase location to be programmed[1]	
010	Word 0 program value	
011	Word 1 program value	
100	Word 2 program value	
101	Word 3 program value	

[1] Global address [2:0] must be 000

Upon clearing CCIF to launch the Program P-Flash command, the Memory Controller will program the data words to the supplied global address and will then proceed to verify the data words read back as expected. The CCIF flag will set after the Program P-Flash operation has completed.

Table 28-41. Program P-Flash Command Error Handling

Register	Error Bit	Error Condition
FSTAT	ACCERR	Set if CCOBIX[2:0] != 101 at command launch
		Set if command not available in current mode (see Table 28-27)
		Set if an invalid global address [17:0] is supplied see Table 28-3)[1]
		Set if a misaligned phrase address is supplied (global address [2:0] != 000)
	FPVIOL	Set if the global address [17:0] points to a protected area
	MGSTAT1	Set if any errors have been encountered during the verify operation
	MGSTAT0	Set if any non-correctable errors have been encountered during the verify operation

[1] As defined by the memory map for FTMRG96K1.

28.4.6.6 Program Once Command

The Program Once command restricts programming to a reserved 64 byte field (8 phrases) in the nonvolatile information register located in P-Flash. The Program Once reserved field can be read using the Read Once command as described in Section 28.4.6.4. The Program Once command must only be issued once since the nonvolatile information register in P-Flash cannot be erased. The Program Once command must not be executed from the Flash block containing the Program Once reserved field to avoid code runaway.

Table 28-42. Program Once Command FCCOB Requirements

CCOBIX[2:0]	FCCOB Parameters	
000	0x07	Not Required
001	Program Once phrase index (0x0000 - 0x0007)	
010	Program Once word 0 value	
011	Program Once word 1 value	
100	Program Once word 2 value	
101	Program Once word 3 value	

Upon clearing CCIF to launch the Program Once command, the Memory Controller first verifies that the selected phrase is erased. If erased, then the selected phrase will be programmed and then verified with read back. The CCIF flag will remain clear, setting only after the Program Once operation has completed.

The reserved nonvolatile information register accessed by the Program Once command cannot be erased and any attempt to program one of these phrases a second time will not be allowed. Valid phrase index values for the Program Once command range from 0x0000 to 0x0007. During execution of the Program Once command, any attempt to read addresses within P-Flash will return invalid data.

Table 28-43. Program Once Command Error Handling

Register	Error Bit	Error Condition
FSTAT	ACCERR	Set if CCOBIX[2:0] != 101 at command launch
		Set if command not available in current mode (see Table 28-27)
		Set if an invalid phrase index is supplied
		Set if the requested phrase has already been programmed[1]
	FPVIOL	None
	MGSTAT1	Set if any errors have been encountered during the verify operation
	MGSTAT0	Set if any non-correctable errors have been encountered during the verify operation

1 If a Program Once phrase is initially programmed to 0xFFFF_FFFF_FFFF_FFFF, the Program Once command will be allowed to execute again on that same phrase.

28.4.6.7 Erase All Blocks Command

The Erase All Blocks operation will erase the entire P-Flash and EEPROM memory space.

Table 28-44. Erase All Blocks Command FCCOB Requirements

CCOBIX[2:0]	FCCOB Parameters	
000	0x08	Not required

Upon clearing CCIF to launch the Erase All Blocks command, the Memory Controller will erase the entire Flash memory space and verify that it is erased. If the Memory Controller verifies that the entire Flash memory space was properly erased, security will be released. During the execution of this command (CCIF=0) the user must not write to any Flash module register. The CCIF flag will set after the Erase All Blocks operation has completed.

Table 28-45. Erase All Blocks Command Error Handling

Register	Error Bit	Error Condition
FSTAT	ACCERR	Set if CCOBIX[2:0] != 000 at command launch
		Set if command not available in current mode (see Table 28-27)
	FPVIOL	Set if any area of the P-Flash or EEPROM memory is protected
	MGSTAT1	Set if any errors have been encountered during the verify operation[1]
	MGSTAT0	Set if any non-correctable errors have been encountered during the verify operation[1]

1 As found in the memory map for FTMRG96K1.

28.4.6.8 Erase Flash Block Command

The Erase Flash Block operation will erase all addresses in a P-Flash or EEPROM block.

Table 28-46. Erase Flash Block Command FCCOB Requirements

CCOBIX[2:0]	FCCOB Parameters	
000	0x09	Global address [17:16] to identify Flash block
001	Global address [15:0] in Flash block to be erased	

Upon clearing CCIF to launch the Erase Flash Block command, the Memory Controller will erase the selected Flash block and verify that it is erased. The CCIF flag will set after the Erase Flash Block operation has completed.

Table 28-47. Erase Flash Block Command Error Handling

Register	Error Bit	Error Condition
FSTAT	ACCERR	Set if CCOBIX[2:0] != 001 at command launch
		Set if command not available in current mode (see Table 28-27)
		Set if an invalid global address [17:16] is supplied[1]
		Set if the supplied P-Flash address is not phrase-aligned or if the EEPROM address is not word-aligned
	FPVIOL	Set if an area of the selected Flash block is protected
	MGSTAT1	Set if any errors have been encountered during the verify operation[2]
	MGSTAT0	Set if any non-correctable errors have been encountered during the verify operation[2]

1 As defined by the memory map for FTMRG96K1.

2 As found in the memory map for FTMRG96K1.

28.4.6.9 Erase P-Flash Sector Command

The Erase P-Flash Sector operation will erase all addresses in a P-Flash sector.

Table 28-48. Erase P-Flash Sector Command FCCOB Requirements

CCOBIX[2:0]	FCCOB Parameters	
000	0x0A	Global address [17:16] to identify P-Flash block to be erased
001	Global address [15:0] anywhere within the sector to be erased. Refer to Section 28.1.2.1 for the P-Flash sector size.	

Upon clearing CCIF to launch the Erase P-Flash Sector command, the Memory Controller will erase the selected Flash sector and then verify that it is erased. The CCIF flag will be set after the Erase P-Flash Sector operation has completed.

Table 28-49. Erase P-Flash Sector Command Error Handling

Register	Error Bit	Error Condition
FSTAT	ACCERR	Set if CCOBIX[2:0] != 001 at command launch
		Set if command not available in current mode (see Table 28-27)
		Set if an invalid global address [17:16] is supplied see Table 28-3)[1]
		Set if a misaligned phrase address is supplied (global address [2:0] != 000)
	FPVIOL	Set if the selected P-Flash sector is protected
	MGSTAT1	Set if any errors have been encountered during the verify operation
	MGSTAT0	Set if any non-correctable errors have been encountered during the verify operation

1 As defined by the memory map for FTMRG96K1.

28.4.6.10 Unsecure Flash Command

The Unsecure Flash command will erase the entire P-Flash and EEPROM memory space and, if the erase is successful, will release security.

Table 28-50. Unsecure Flash Command FCCOB Requirements

CCOBIX[2:0]	FCCOB Parameters	
000	0x0B	Not required

Upon clearing CCIF to launch the Unsecure Flash command, the Memory Controller will erase the entire P-Flash and EEPROM memory space and verify that it is erased. If the Memory Controller verifies that the entire Flash memory space was properly erased, security will be released. If the erase verify is not successful, the Unsecure Flash operation sets MGSTAT1 and terminates without changing the security state. During the execution of this command (CCIF=0) the user must not write to any Flash module register. The CCIF flag is set after the Unsecure Flash operation has completed.

Table 28-51. Unsecure Flash Command Error Handling

Register	Error Bit	Error Condition
FSTAT	ACCERR	Set if CCOBIX[2:0] != 000 at command launch
		Set if command not available in current mode (see Table 28-27)
	FPVIOL	Set if any area of the P-Flash or EEPROM memory is protected
	MGSTAT1	Set if any errors have been encountered during the verify operation[1]
	MGSTAT0	Set if any non-correctable errors have been encountered during the verify operation[1]

1 As found in the memory map for FTMRG96K1.

28.4.6.11 Verify Backdoor Access Key Command

The Verify Backdoor Access Key command will only execute if it is enabled by the KEYEN bits in the FSEC register (see Table 28-10). The Verify Backdoor Access Key command releases security if user-supplied keys match those stored in the Flash security bytes of the Flash configuration field (see Table 28-4). The Verify Backdoor Access Key command must not be executed from the Flash block containing the backdoor comparison key to avoid code runaway.

Table 28-52. Verify Backdoor Access Key Command FCCOB Requirements

CCOBIX[2:0]	FCCOB Parameters	
000	0x0C	Not required
001	Key 0	
010	Key 1	
011	Key 2	
100	Key 3	

Upon clearing CCIF to launch the Verify Backdoor Access Key command, the Memory Controller will check the FSEC KEYEN bits to verify that this command is enabled. If not enabled, the Memory Controller sets the ACCERR bit in the FSTAT register and terminates. If the command is enabled, the Memory Controller compares the key provided in FCCOB to the backdoor comparison key in the Flash configuration field with Key 0 compared to 0x3_FF00, etc. If the backdoor keys match, security will be released. If the backdoor keys do not match, security is not released and all future attempts to execute the Verify Backdoor Access Key command are aborted (set ACCERR) until a reset occurs. The CCIF flag is set after the Verify Backdoor Access Key operation has completed.

Table 28-53. Verify Backdoor Access Key Command Error Handling

Register	Error Bit	Error Condition
FSTAT	ACCERR	Set if CCOBIX[2:0] != 100 at command launch
		Set if an incorrect backdoor key is supplied
		Set if backdoor key access has not been enabled (KEYEN[1:0] != 10, see Section 28.3.2.2)
		Set if the backdoor key has mismatched since the last reset
	FPVIOL	None
	MGSTAT1	None
	MGSTAT0	None

28.4.6.12 Set User Margin Level Command

The Set User Margin Level command causes the Memory Controller to set the margin level for future read operations of the P-Flash or EEPROM block.

Table 28-54. Set User Margin Level Command FCCOB Requirements

CCOBIX[2:0]	FCCOB Parameters	
000	0x0D	Flash block selection code [1:0]. See Table 28-34
001	Margin level setting.	

Upon clearing CCIF to launch the Set User Margin Level command, the Memory Controller will set the user margin level for the targeted block and then set the CCIF flag.

NOTE

When the EEPROM block is targeted, the EEPROM user margin levels are applied only to the EEPROM reads. However, when the P-Flash block is targeted, the P-Flash user margin levels are applied to both P-Flash and EEPROM reads. It is not possible to apply user margin levels to the P-Flash block only.

Valid margin level settings for the Set User Margin Level command are defined in Table 28-55.

Table 28-55. Valid Set User Margin Level Settings

CCOB (CCOBIX=001)	Level Description
0x0000	Return to Normal Level
0x0001	User Margin-1 Level[1]
0x0002	User Margin-0 Level[2]

1 Read margin to the erased state

2 Read margin to the programmed state

Table 28-56. Set User Margin Level Command Error Handling

Register	Error Bit	Error Condition
FSTAT	ACCERR	Set if CCOBIX[2:0] != 001 at command launch
		Set if command not available in current mode (see Table 28-27)
		Set if an invalid FlashBlockSelectionCode[1:0] is supplied (See Table 28-34)
		Set if an invalid margin level setting is supplied
	FPVIOL	None
	MGSTAT1	None
	MGSTAT0	None

NOTE

User margin levels can be used to check that Flash memory contents have adequate margin for normal level read operations. If unexpected results are encountered when checking Flash memory contents at user margin levels, a potential loss of information has been detected.

28.4.6.13 Set Field Margin Level Command

The Set Field Margin Level command, valid in special modes only, causes the Memory Controller to set the margin level specified for future read operations of the P-Flash or EEPROM block.

Upon clearing CCIF to launch the Set Field Margin Level command, the Memory Controller will set the

Table 28-57. Set Field Margin Level Command FCCOB Requirements

CCOBIX[2:0]	FCCOB Parameters	
000	0x0E	Flash block selection code [1:0]. See Table 28-34
001	Margin level setting.	

field margin level for the targeted block and then set the CCIF flag.

NOTE

When the EEPROM block is targeted, the EEPROM field margin levels are applied only to the EEPROM reads. However, when the P-Flash block is targeted, the P-Flash field margin levels are applied to both P-Flash and EEPROM reads. It is not possible to apply field margin levels to the P-Flash block only.

Valid margin level settings for the Set Field Margin Level command are defined in Table 28-58.

Table 28-58. Valid Set Field Margin Level Settings

CCOB (CCOBIX=001)	Level Description
0x0000	Return to Normal Level
0x0001	User Margin-1 Level[1]
0x0002	User Margin-0 Level[2]
0x0003	Field Margin-1 Level[1]
0x0004	Field Margin-0 Level[2]

[1] Read margin to the erased state

[2] Read margin to the programmed state

Table 28-59. Set Field Margin Level Command Error Handling

Register	Error Bit	Error Condition
FSTAT	ACCERR	Set if CCOBIX[2:0] != 001 at command launch
		Set if command not available in current mode (see Table 28-27)
		Set if an invalid FlashBlockSelectionCode[1:0] is supplied (See Table 28-34)[1]
		Set if an invalid margin level setting is supplied
	FPVIOL	None
	MGSTAT1	None
	MGSTAT0	None

1 As defined by the memory map for FTMRG96K1.

CAUTION

Field margin levels must only be used during verify of the initial factory programming.

NOTE

Field margin levels can be used to check that Flash memory contents have adequate margin for data retention at the normal level setting. If unexpected results are encountered when checking Flash memory contents at field margin levels, the Flash memory contents should be erased and reprogrammed.

28.4.6.14 Erase Verify EEPROM Section Command

The Erase Verify EEPROM Section command will verify that a section of code in the EEPROM is erased. The Erase Verify EEPROM Section command defines the starting point of the data to be verified and the number of words.

Table 28-60. Erase Verify EEPROM Section Command FCCOB Requirements

CCOBIX[2:0]	FCCOB Parameters	
000	0x10	Global address [17:16] to identify the EEPROM block
001	Global address [15:0] of the first word to be verified	
010	Number of words to be verified	

Upon clearing CCIF to launch the Erase Verify EEPROM Section command, the Memory Controller will verify the selected section of EEPROM memory is erased. The CCIF flag will set after the Erase Verify EEPROM Section operation has completed. If the section is not erased, it means blank check failed, both MGSTAT bits will be set.

Table 28-61. Erase Verify EEPROM Section Command Error Handling

Register	Error Bit	Error Condition
FSTAT	ACCERR	Set if CCOBIX[2:0] != 010 at command launch
		Set if command not available in current mode (see Table 28-27)
		Set if an invalid global address [17:0] is supplied
		Set if a misaligned word address is supplied (global address [0] != 0)
		Set if the requested section breaches the end of the EEPROM block
	FPVIOL	None
	MGSTAT1	Set if any errors have been encountered during the read or if blank check failed.
	MGSTAT0	Set if any non-correctable errors have been encountered during the read or if blank check failed.

28.4.6.15 Program EEPROM Command

The Program EEPROM operation programs one to four previously erased words in the EEPROM block. The Program EEPROM operation will confirm that the targeted location(s) were successfully programmed upon completion.

CAUTION

A Flash word must be in the erased state before being programmed. Cumulative programming of bits within a Flash word is not allowed.

Table 28-62. Program EEPROM Command FCCOB Requirements

CCOBIX[2:0]	FCCOB Parameters	
000	0x11	Global address [17:16] to identify the EEPROM block
001	Global address [15:0] of word to be programmed	
010	Word 0 program value	
011	Word 1 program value, if desired	
100	Word 2 program value, if desired	
101	Word 3 program value, if desired	

Upon clearing CCIF to launch the Program EEPROM command, the user-supplied words will be transferred to the Memory Controller and be programmed if the area is unprotected. The CCOBIX index value at Program EEPROM command launch determines how many words will be programmed in the EEPROM block. The CCIF flag is set when the operation has completed.

Table 28-63. Program EEPROM Command Error Handling

Register	Error Bit	Error Condition
FSTAT	ACCERR	Set if CCOBIX[2:0] < 010 at command launch
		Set if CCOBIX[2:0] > 101 at command launch
		Set if command not available in current mode (see Table 28-27)
		Set if an invalid global address [17:0] is supplied
		Set if a misaligned word address is supplied (global address [0] != 0)
		Set if the requested group of words breaches the end of the EEPROM block
	FPVIOL	Set if the selected area of the EEPROM memory is protected
	MGSTAT1	Set if any errors have been encountered during the verify operation
	MGSTAT0	Set if any non-correctable errors have been encountered during the verify operation

28.4.6.16 Erase EEPROM Sector Command

The Erase EEPROM Sector operation will erase all addresses in a sector of the EEPROM block.

Table 28-64. Erase EEPROM Sector Command FCCOB Requirements

CCOBIX[2:0]	FCCOB Parameters	
000	0x12	Global address [17:16] to identify EEPROM block
001	Global address [15:0] anywhere within the sector to be erased. See Section 28.1.2.2 for EEPROM sector size.	

Upon clearing CCIF to launch the Erase EEPROM Sector command, the Memory Controller will erase the selected Flash sector and verify that it is erased. The CCIF flag will set after the Erase EEPROM Sector operation has completed.

Table 28-65. Erase EEPROM Sector Command Error Handling

Register	Error Bit	Error Condition
FSTAT	ACCERR	Set if CCOBIX[2:0] != 001 at command launch
		Set if command not available in current mode (see Table 28-27)
		Set if an invalid global address [17:0] is suppliedsee Table 28-3)
		Set if a misaligned word address is supplied (global address [0] != 0)
	FPVIOL	Set if the selected area of the EEPROM memory is protected
	MGSTAT1	Set if any errors have been encountered during the verify operation
	MGSTAT0	Set if any non-correctable errors have been encountered during the verify operation

28.4.7 Interrupts

The Flash module can generate an interrupt when a Flash command operation has completed or when a Flash command operation has detected an ECC fault.

Table 28-66. Flash Interrupt Sources

Interrupt Source	Interrupt Flag	Local Enable	Global (CCR) Mask
Flash Command Complete	CCIF (FSTAT register)	CCIE (FCNFG register)	I Bit
ECC Double Bit Fault on Flash Read	DFDIF (FERSTAT register)	DFDIE (FERCNFG register)	I Bit
ECC Single Bit Fault on Flash Read	SFDIF (FERSTAT register)	SFDIE (FERCNFG register)	I Bit

NOTE

Vector addresses and their relative interrupt priority are determined at the MCU level.

28.4.7.1 Description of Flash Interrupt Operation

The Flash module uses the CCIF flag in combination with the CCIE interrupt enable bit to generate the Flash command interrupt request. The Flash module uses the DFDIF and SFDIF flags in combination with the DFDIE and SFDIE interrupt enable bits to generate the Flash error interrupt request. For a detailed description of the register bits involved, refer to Section 28.3.2.5, “Flash Configuration Register (FCNFG)”, Section 28.3.2.6, “Flash Error Configuration Register (FERCNFG)”, Section 28.3.2.7, “Flash Status Register (FSTAT)”, and Section 28.3.2.8, “Flash Error Status Register (FERSTAT)”.

The logic used for generating the Flash module interrupts is shown in Figure 28-27.

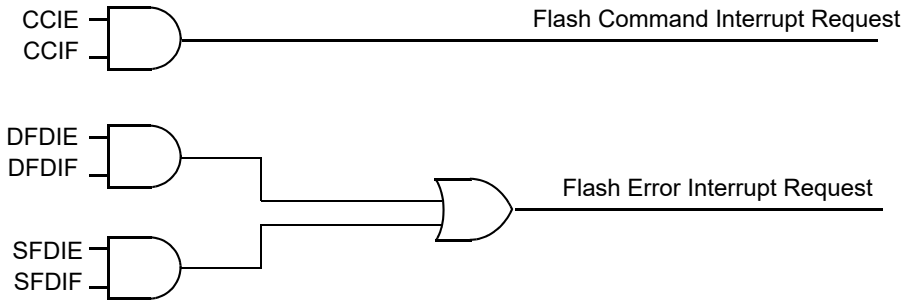

Figure 28-27. Flash Module Interrupts Implementation

28.4.8 Wait Mode

The Flash module is not affected if the MCU enters wait mode. The Flash module can recover the MCU from wait via the CCIF interrupt (see Section 28.4.7, “Interrupts”).

28.4.9 Stop Mode

If a Flash command is active (CCIF = 0) when the MCU requests stop mode, the current Flash operation will be completed before the MCU is allowed to enter stop mode.

28.5 Security

The Flash module provides security information to the MCU. The Flash security state is defined by the SEC bits of the FSEC register (see Table 28-11). During reset, the Flash module initializes the FSEC register using data read from the security byte of the Flash configuration field at global address 0x3_FF0F. The security state out of reset can be permanently changed by programming the security byte assuming that the MCU is starting from a mode where the necessary P-Flash erase and program commands are available and that the upper region of the P-Flash is unprotected. If the Flash security byte is successfully programmed, its new value will take affect after the next MCU reset.

The following subsections describe these security-related subjects:

- Unsecuring the MCU using Backdoor Key Access
- Unsecuring the MCU in Special Single Chip Mode using BDM
- Mode and Security Effects on Flash Command Availability

28.5.1 Unsecuring the MCU using Backdoor Key Access

The MCU may be unsecured by using the backdoor key access feature which requires knowledge of the contents of the backdoor keys (four 16-bit words programmed at addresses 0x3_FF00-0x3_FF07). If the KEYEN[1:0] bits are in the enabled state (see Section 28.3.2.2), the Verify Backdoor Access Key command (see Section 28.4.6.11) allows the user to present four prospective keys for comparison to the keys stored in the Flash memory via the Memory Controller. If the keys presented in the Verify Backdoor Access Key command match the backdoor keys stored in the Flash memory, the SEC bits in the FSEC register (see Table 28-11) will be changed to unsecure the MCU. Key values of 0x0000 and 0xFFFF are not permitted as backdoor keys. While the Verify Backdoor Access Key command is active, P-Flash memory and EEPROM memory will not be available for read access and will return invalid data.

The user code stored in the P-Flash memory must have a method of receiving the backdoor keys from an external stimulus. This external stimulus would typically be through one of the on-chip serial ports.

If the KEYEN[1:0] bits are in the enabled state (see Section 28.3.2.2), the MCU can be unsecured by the backdoor key access sequence described below:

1. Follow the command sequence for the Verify Backdoor Access Key command as explained in Section 28.4.6.11
2. If the Verify Backdoor Access Key command is successful, the MCU is unsecured and the SEC[1:0] bits in the FSEC register are forced to the unsecure state of 10

The Verify Backdoor Access Key command is monitored by the Memory Controller and an illegal key will prohibit future use of the Verify Backdoor Access Key command. A reset of the MCU is the only method to re-enable the Verify Backdoor Access Key command. The security as defined in the Flash security byte (0x3_FF0F) is not changed by using the Verify Backdoor Access Key command sequence. The backdoor keys stored in addresses 0x3_FF00-0x3_FF07 are unaffected by the Verify Backdoor Access Key command sequence. The Verify Backdoor Access Key command sequence has no effect on the program and erase protections defined in the Flash protection register, FPROT.

After the backdoor keys have been correctly matched, the MCU will be unsecured. After the MCU is unsecured, the sector containing the Flash security byte can be erased and the Flash security byte can be reprogrammed to the unsecure state, if desired. In the unsecure state, the user has full control of the contents of the backdoor keys by programming addresses 0x3_FF00-0x3_FF07 in the Flash configuration field.

28.5.2 Unsecuring the MCU in Special Single Chip Mode using BDM

A secured MCU can be unsecured in special single chip mode by using the following method to erase the P-Flash and EEPROM memory:

1. Reset the MCU into special single chip mode
2. Delay while the BDM executes the Erase Verify All Blocks command write sequence to check if the P-Flash and EEPROM memories are erased
3. Send BDM commands to disable protection in the P-Flash and EEPROM memory
4. Execute the Erase All Blocks command write sequence to erase the P-Flash and EEPROM memory. Alternatively the Unsecure Flash command can be executed, if so the steps 5 and 6 below are skeeped.
5. After the CCIF flag sets to indicate that the Erase All Blocks operation has completed, reset the MCU into special single chip mode
6. Delay while the BDM executes the Erase Verify All Blocks command write sequence to verify that the P-Flash and EEPROM memory are erased

If the P-Flash and EEPROM memory are verified as erased, the MCU will be unsecured. All BDM commands will now be enabled and the Flash security byte may be programmed to the unsecure state by continuing with the following steps:

7. Send BDM commands to execute the Program P-Flash command write sequence to program the Flash security byte to the unsecured state

8. Reset the MCU

28.5.3 Mode and Security Effects on Flash Command Availability

The availability of Flash module commands depends on the MCU operating mode and security state as shown in Table 28-27.

28.6 Initialization

On each system reset the flash module executes an initialization sequence which establishes initial values for the Flash Block Configuration Parameters, the FPROT and EEPROT protection registers, and the FOPT and FSEC registers. The initialization routine reverts to built-in default values that leave the module in a fully protected and secured state if errors are encountered during execution of the reset sequence. If a double bit fault is detected during the reset sequence, both MGSTAT bits in the FSTAT register will be set.

CCIF is cleared throughout the initialization sequence. The Flash module holds off all CPU access for a portion of the initialization sequence. Flash reads are allowed once the hold is removed. Completion of the initialization sequence is marked by setting CCIF high which enables user commands.

If a reset occurs while any Flash command is in progress, that command will be immediately aborted. The state of the word being programmed or the sector/block being erased is not guaranteed.

Chapter 29
128 KByte Flash Module (S12FTMRG128K1V1)

Table 29-1. Revision History

Revision Number	Revision Date	Sections Affected	Description of Changes
V01.11	17 Jun 2010	29.4.6.1/29-1054 29.4.6.2/29-1055 29.4.6.3/29-1055 29.4.6.14/29-1065	Clarify Erase Verify Commands Descriptions related to the bits MGSTAT[1:0] of the register FSTAT.
V01.12	31 Aug 2010	29.4.6.2/29-1055 29.4.6.12/29-1062 29.4.6.13/29-1064	Updated description of the commands RD1BLK, MLOADU and MLOADF
V01.13	31 Jan 2011	29.3.2.9/29-1038	Updated description of protection on Section 29.3.2.9

29.1 Introduction

The FTMRG128K1 module implements the following:

- 128Kbytes of P-Flash (Program Flash) memory
- 4 Kbytes of EEPROM memory

The Flash memory is ideal for single-supply applications allowing for field reprogramming without requiring external high voltage sources for program or erase operations. The Flash module includes a memory controller that executes commands to modify Flash memory contents. The user interface to the memory controller consists of the indexed Flash Common Command Object (FCCOB) register which is written to with the command, global address, data, and any required command parameters. The memory controller must complete the execution of a command before the FCCOB register can be written to with a new command.

CAUTION

A Flash word or phrase must be in the erased state before being programmed. Cumulative programming of bits within a Flash word or phrase is not allowed.

The Flash memory may be read as bytes and aligned words. Read access time is one bus cycle for bytes and aligned words. For misaligned words access, the CPU has to perform twice the byte read access command. For Flash memory, an erased bit reads 1 and a programmed bit reads 0.

It is possible to read from P-Flash memory while some commands are executing on EEPROM memory. It is not possible to read from EEPROM memory while a command is executing on P-Flash memory. Simultaneous P-Flash and EEPROM operations are discussed in Section 29.4.5.

Both P-Flash and EEPROM memories are implemented with Error Correction Codes (ECC) that can resolve single bit faults and detect double bit faults. For P-Flash memory, the ECC implementation requires that programming be done on an aligned 8 byte basis (a Flash phrase). Since P-Flash memory is always read by half-phrase, only one single bit fault in an aligned 4 byte half-phrase containing the byte or word accessed will be corrected.

29.1.1 Glossary

Command Write Sequence — An MCU instruction sequence to execute built-in algorithms (including program and erase) on the Flash memory.

EEPROM Memory — The EEPROM memory constitutes the nonvolatile memory store for data.

EEPROM Sector — The EEPROM sector is the smallest portion of the EEPROM memory that can be erased. The EEPROM sector consists of 4 bytes.

NVM Command Mode — An NVM mode using the CPU to setup the FCCOB register to pass parameters required for Flash command execution.

Phrase — An aligned group of four 16-bit words within the P-Flash memory. Each phrase includes two sets of aligned double words with each set including 7 ECC bits for single bit fault correction and double bit fault detection within each double word.

P-Flash Memory — The P-Flash memory constitutes the main nonvolatile memory store for applications.

P-Flash Sector — The P-Flash sector is the smallest portion of the P-Flash memory that can be erased. Each P-Flash sector contains 512 bytes.

Program IFR — Nonvolatile information register located in the P-Flash block that contains the Version ID, and the Program Once field.

29.1.2 Features

29.1.2.1 P-Flash Features

- 128 Kbytes of P-Flash memory composed of one 128 Kbyte Flash block divided into 256 sectors of 512 bytes
- Single bit fault correction and double bit fault detection within a 32-bit double word during read operations
- Automated program and erase algorithm with verify and generation of ECC parity bits

- Fast sector erase and phrase program operation
- Ability to read the P-Flash memory while programming a word in the EEPROM memory
- Flexible protection scheme to prevent accidental program or erase of P-Flash memory

29.1.2.2 EEPROM Features

- 4 Kbytes of EEPROM memory composed of one 4 Kbyte Flash block divided into 1024 sectors of 4 bytes
- Single bit fault correction and double bit fault detection within a word during read operations
- Automated program and erase algorithm with verify and generation of ECC parity bits
- Fast sector erase and word program operation
- Protection scheme to prevent accidental program or erase of EEPROM memory
- Ability to program up to four words in a burst sequence

29.1.2.3 Other Flash Module Features

- No external high-voltage power supply required for Flash memory program and erase operations
- Interrupt generation on Flash command completion and Flash error detection
- Security mechanism to prevent unauthorized access to the Flash memory

29.1.3 Block Diagram

The block diagram of the Flash module is shown in Figure 29-1.

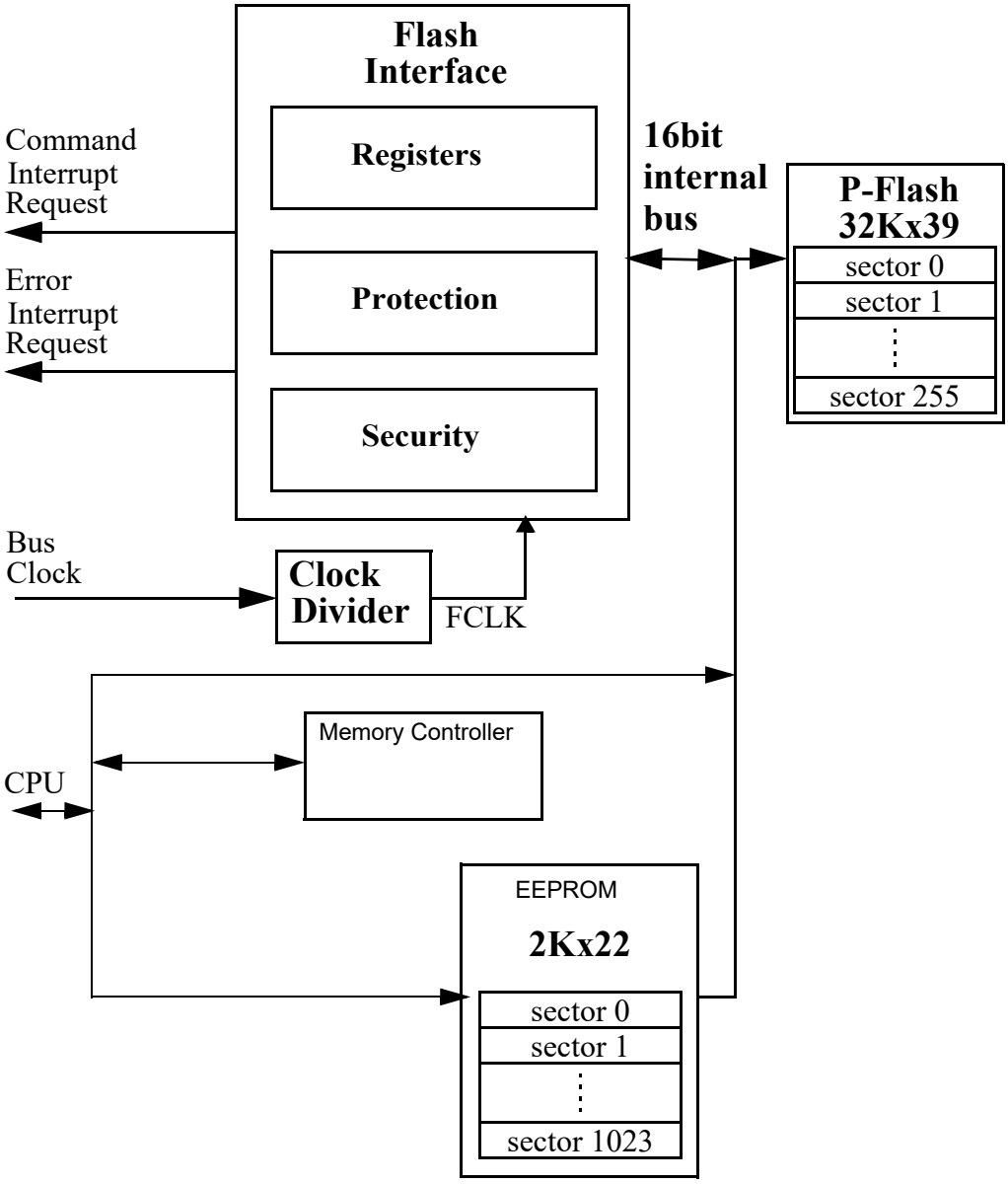

Figure 29-1. FTMRG128K1 Block Diagram

29.2 External Signal Description

The Flash module contains no signals that connect off-chip.

29.3 Memory Map and Registers

This section describes the memory map and registers for the Flash module. Read data from unimplemented memory space in the Flash module is undefined. Write access to unimplemented or reserved memory space in the Flash module will be ignored by the Flash module.

CAUTION

Writing to the Flash registers while a Flash command is executing (that is indicated when the value of flag CCIF reads as ’0’) is not allowed. If such action is attempted the write operation will not change the register value.

Writing to the Flash registers is allowed when the Flash is not busy executing commands (CCIF = 1) and during initialization right after reset, despite the value of flag CCIF in that case (refer to Section 29.6 for a complete description of the reset sequence).

.

Table 29-2. FTMRG Memory Map

Global Address (in Bytes)	Size (Bytes)	Description
0x0_0000 - 0x0_03FF	1,024	Register Space
0x0_0400 – 0x0_13FF	4,096	EEPROM Memory
0x0_4000 – 0x0_7FFF	16,284	NVMRES[1]=1 : NVM Resource area (see Figure 29-3)
0x2_0000 – 0x3_FFFF	131,072	P-Flash Memory

[1] See NVMRES description in Section 29.4.3

29.3.1 Module Memory Map

The S12 architecture places the P-Flash memory between global addresses 0x2_0000 and 0x3_FFFF as shown in Table 29-3.The P-Flash memory map is shown in Figure 29-2.

Table 29-3. P-Flash Memory Addressing

Global Address	Size (Bytes)	Description
0x2_0000 – 0x3_FFFF	128 K	P-Flash Block Contains Flash Configuration Field (see Table 29-4)

The FPROT register, described in Section 29.3.2.9, can be set to protect regions in the Flash memory from accidental program or erase. Three separate memory regions, one growing upward from global address 0x3_8000 in the Flash memory (called the lower region), one growing downward from global address 0x3_FFFF in the Flash memory (called the higher region), and the remaining addresses in the Flash memory, can be activated for protection. The Flash memory addresses covered by these protectable regions are shown in the P-Flash memory map. The higher address region is mainly targeted to hold the boot loader code since it covers the vector space. Default protection settings as well as security information that allows the MCU to restrict access to the Flash module are stored in the Flash configuration field as described in Table 29-4.

Table 29-4. Flash Configuration Field

Global Address	Size (Bytes)	Description
0x3_FF00-0x3_FF07	8	Backdoor Comparison Key Refer to Section 29.4.6.11, “Verify Backdoor Access Key Command,” and Section 29.5.1, “Unsecuring the MCU using Backdoor Key Access”
0x3_FF08-0x3_FF0B[1]	4	Reserved
0x3_FF0C[1]	1	P-Flash Protection byte. Refer to Section 29.3.2.9, “P-Flash Protection Register (FPROT)”
0x3_FF0D[1]	1	EEPROM Protection byte. Refer to Section 29.3.2.10, “EEPROM Protection Register (DFPROT)”
0x3_FF0E[1]	1	Flash Nonvolatile byte Refer to Section 29.3.2.16, “Flash Option Register (FOPT)”
0x3_FF0F[1]	1	Flash Security byte Refer to Section 29.3.2.2, “Flash Security Register (FSEC)”

[1] 0x3FF08-0x3_FF0F form a Flash phrase and must be programmed in a single command write sequence. Each byte in the 0x3_FF08 - 0x3_FF0B reserved field should be programmed to 0xFF.

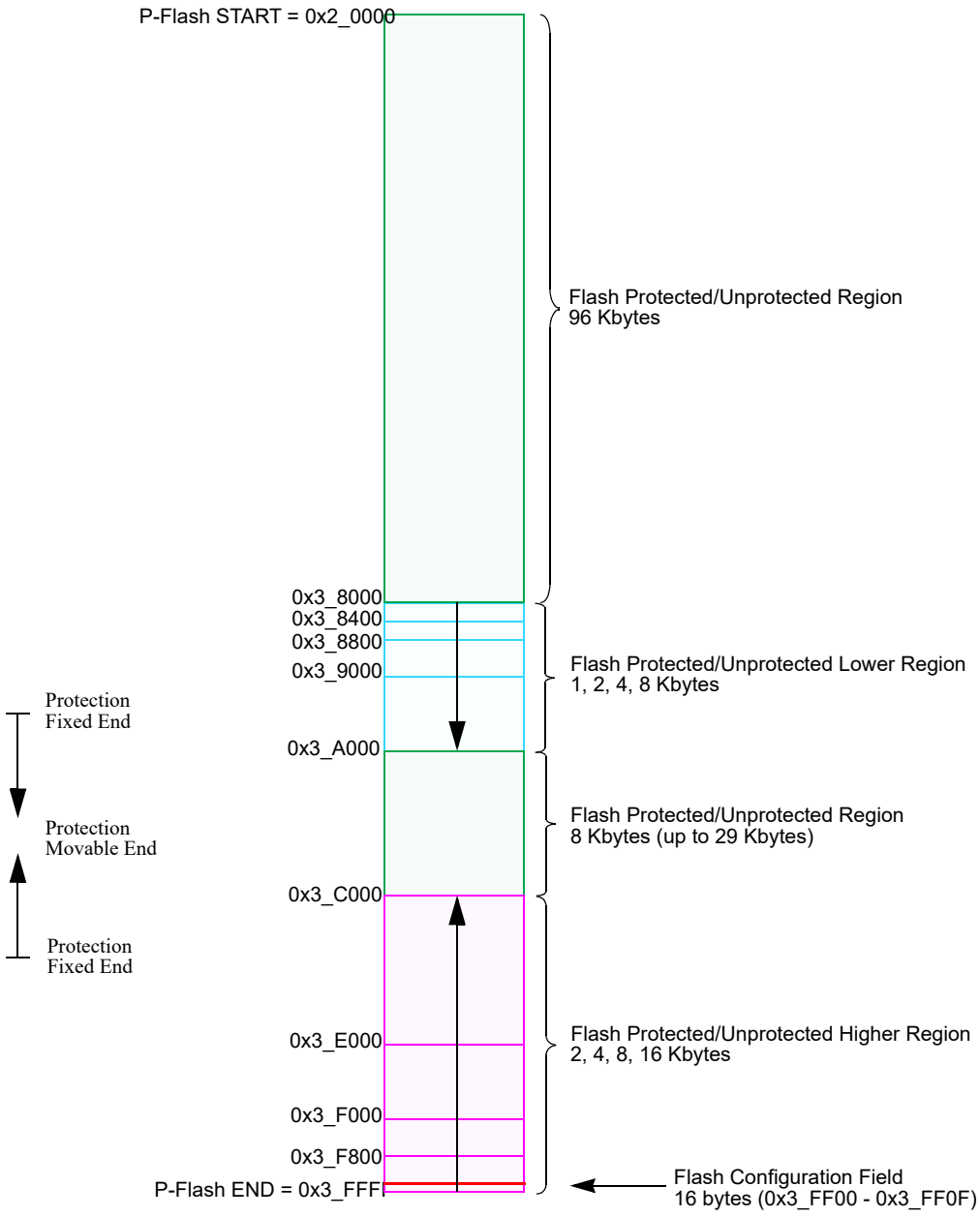

Figure 29-2. P-Flash Memory Map

Table 29-5. Program IFR Fields

Global Address	Size (Bytes)	Field Description
0x0_4000 – 0x0_4007	8	Reserved
0x0_4008 – 0x0_40B5	174	Reserved
0x0_40B6 – 0x0_40B7	2	Version ID[1]

Table 29-5. Program IFR Fields

Global Address	Size (Bytes)	Field Description
0x0_40B8 – 0x0_40BF	8	Reserved
0x0_40C0 – 0x0_40FF	64	Program Once Field Refer to Section 29.4.6.6, “Program Once Command”

1 Used to track firmware patch versions, see Section 29.4.2

Table 29-6. Memory Controller Resource Fields (NVMRES[1]=1)

Global Address	Size (Bytes)	Description
0x0_4000 – 0x040FF	256	P-Flash IFR (see Table 29-5)
0x0_4100 – 0x0_41FF	256	Reserved.
0x0_4200 – 0x0_57FF		Reserved
0x0_5800 – 0x0_59FF	512	Reserved
0x0_5A00 – 0x0_5FFF	1,536	Reserved
0x0_6000 – 0x0_6BFF	3,072	Reserved
0x0_6C00 – 0x0_7FFF	5,120	Reserved

1 NVMRES - See Section 29.4.3 for NVMRES (NVM Resource) detail.

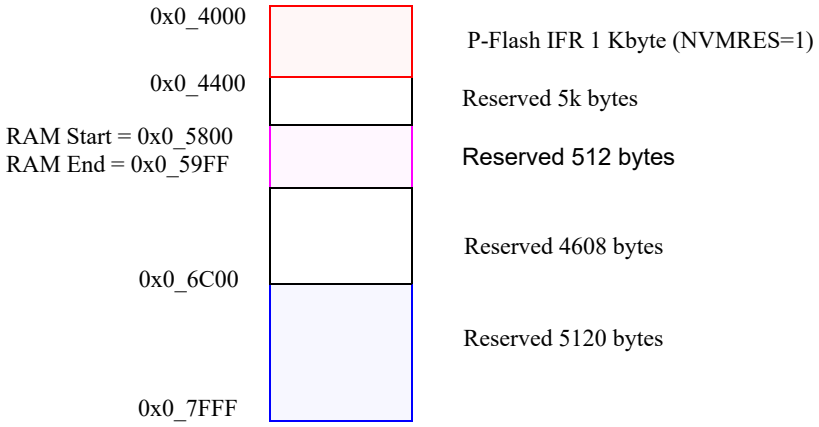

Figure 29-3. Memory Controller Resource Memory Map (NVMRES=1)

29.3.2 Register Descriptions

The Flash module contains a set of 20 control and status registers located between Flash module base + 0x0000 and 0x0013.

In the case of the writable registers, the write accesses are forbidden during Fash command execution (for more detail, see Caution note in Section 29.3).

A summary of the Flash module registers is given in Figure 29-4 with detailed descriptions in the following subsections.

Address & Name		7	6	5	4	3	2	1	0
0x0000 FCLKDIV	R	FDIVLD	FDIVLCK	FDIV5	FDIV4	FDIV3	FDIV2	FDIV1	FDIV0
	W								
0x0001 FSEC	R	KEYEN1	KEYEN0	RNV5	RNV4	RNV3	RNV2	SEC1	SEC0
	W								
0x0002 FCCOBIX	R	0	0	0	0	0	CCOBIX2	CCOBIX1	CCOBIX0
	W								
0x0003 FRSV0	R	0	0	0	0	0	0	0	0
	W								
0x0004 FCNFG	R	CCIE	0	0	IGNSF	0	0	FDFD	FSFD
	W								
0x0005 FERCNFG	R	0	0	0	0	0	0	DFDIE	SFDIE
	W								
0x0006 FSTAT	R	CCIF	0	ACCERR	FPVIOL	MGBUSY	RSVD	MGSTAT1	MGSTAT0
	W								
0x0007 FERSTAT	R	0	0	0	0	0	0	DFDIF	SFDIF
	W								
0x0008 FPROT	R	FPOPEN	RNV6	FPHDIS	FPHS1	FPHS0	FPLDIS	FPLS1	FPLS0
	W								
0x0009 DFPROT	R	DPOPEN	DPS6	DPS5	DPS4	DPS3	DPS2	DPS1	DPS0
	W								

Figure 29-4. FTMRG128K1 Register Summary

Address & Name		7	6	5	4	3	2	1	0
0x000A FCCOBHI	R	CCOB15	CCOB14	CCOB13	CCOB12	CCOB11	CCOB10	CCOB9	CCOB8
	W								
0x000B FCCOBLO	R	CCOB7	CCOB6	CCOB5	CCOB4	CCOB3	CCOB2	CCOB1	CCOB0
	W								
0x000C FRSV1	R	0	0	0	0	0	0	0	0
	W								
0x000D FRSV2	R	0	0	0	0	0	0	0	0
	W								
0x000E FRSV3	R	0	0	0	0	0	0	0	0
	W								
0x000F FRSV4	R	0	0	0	0	0	0	0	0
	W								
0x0010 FOPT	R	NV7	NV6	NV5	NV4	NV3	NV2	NV1	NV0
	W								
0x0011 FRSV5	R	0	0	0	0	0	0	0	0
	W								
0x0012 FRSV6	R	0	0	0	0	0	0	0	0
	W								
0x0013 FRSV7	R	0	0	0	0	0	0	0	0
	W								

= Unimplemented or Reserved

Figure 29-4. FTMRG128K1 Register Summary (continued)

29.3.2.1 Flash Clock Divider Register (FCLKDIV)

The FCLKDIV register is used to control timed events in program and erase algorithms.

Offset Module Base + 0x0000

	7	6	5	4	3	2	1	0
R	FDIVLD	FDIVLCK	FDIV[5:0]					
W								
Reset	0	0	0	0	0	0	0	0

= Unimplemented or Reserved

Figure 29-5. Flash Clock Divider Register (FCLKDIV)

All bits in the FCLKDIV register are readable, bit 7 is not writable, bit 6 is write-once-hi and controls the writability of the FDIV field in normal mode. In special mode, bits 6-0 are writable any number of times but bit 7 remains unwritable.

CAUTION

The FCLKDIV register should never be written while a Flash command is executing (CCIF=0).

Table 29-7. FCLKDIV Field Descriptions

Field	Description
7 FDIVLD	Clock Divider Loaded 0 FCLKDIV register has not been written since the last reset 1 FCLKDIV register has been written since the last reset
6 FDIVLCK	Clock Divider Locked 0 FDIV field is open for writing 1 FDIV value is locked and cannot be changed. Once the lock bit is set high, only reset can clear this bit and restore writability to the FDIV field in normal mode.
5–0 FDIV[5:0]	**Clock Divider Bits** — FDIV[5:0] must be set to effectively divide BUSCLK down to 1 MHz to control timed events during Flash program and erase algorithms. Table 29-8 shows recommended values for FDIV[5:0] based on the BUSCLK frequency. Please refer to Section 29.4.4, “Flash Command Operations,” for more information.

Table 29-8. FDIV values for various BUSCLK Frequencies

BUSCLK Frequency (MHz)		FDIV[5:0]	BUSCLK Frequency (MHz)		FDIV[5:0]
MIN[1]	MAX[2]		MIN[1]	MAX[2]	
1.0	1.6	0x00	16.6	17.6	0x10
1.6	2.6	0x01	17.6	18.6	0x11
2.6	3.6	0x02	18.6	19.6	0x12
3.6	4.6	0x03	19.6	20.6	0x13
4.6	5.6	0x04	20.6	21.6	0x14
5.6	6.6	0x05	21.6	22.6	0x15
6.6	7.6	0x06	22.6	23.6	0x16
7.6	8.6	0x07	23.6	24.6	0x17
8.6	9.6	0x08	24.6	25.6	0x18
9.6	10.6	0x09			
10.6	11.6	0x0A			
11.6	12.6	0x0B			
12.6	13.6	0x0C			
13.6	14.6	0x0D			
14.6	15.6	0x0E			
15.6	16.6	0x0F			

1 BUSCLK is Greater Than this value.

2 BUSCLK is Less Than or Equal to this value.

29.3.2.2 Flash Security Register (FSEC)

The FSEC register holds all bits associated with the security of the MCU and Flash module.

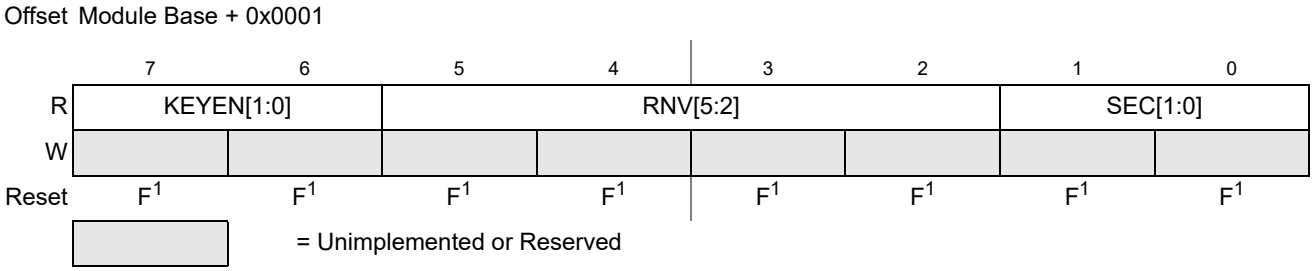

Figure 29-6. Flash Security Register (FSEC)

1 Loaded from IFR Flash configuration field, during reset sequence.

All bits in the FSEC register are readable but not writable.

During the reset sequence, the FSEC register is loaded with the contents of the Flash security byte in the Flash configuration field at global address 0x3_FF0F located in P-Flash memory (see Table 29-4) as

indicated by reset condition F in Figure 29-6. If a double bit fault is detected while reading the P-Flash phrase containing the Flash security byte during the reset sequence, all bits in the FSEC register will be set to leave the Flash module in a secured state with backdoor key access disabled.

Table 29-9. FSEC Field Descriptions

Field	Description
7–6 KEYEN[1:0]	**Backdoor Key Security Enable Bits** — The KEYEN[1:0] bits define the enabling of backdoor key access to the Flash module as shown in Table 29-10.
5–2 RNV[5:2]	**Reserved Nonvolatile Bits** — The RNV bits should remain in the erased state for future enhancements.
1–0 SEC[1:0]	**Flash Security Bits** — The SEC[1:0] bits define the security state of the MCU as shown in Table 29-11. If the Flash module is unsecured using backdoor key access, the SEC bits are forced to 10.

Table 29-10. Flash KEYEN States

KEYEN[1:0]	Status of Backdoor Key Access
00	DISABLED
01	DISABLED[1]
10	ENABLED
11	DISABLED

1 Preferred KEYEN state to disable backdoor key access.

Table 29-11. Flash Security States

SEC[1:0]	Status of Security
00	SECURED
01	SECURED[1]
10	UNSECURED
11	SECURED

1 Preferred SEC state to set MCU to secured state.

The security function in the Flash module is described in Section 29.5.

29.3.2.3 Flash CCOB Index Register (FCCOBIX)

The FCCOBIX register is used to index the FCCOB register for Flash memory operations.

Offset Module Base + 0x0002

	7	6	5	4	3	2	1	0
R	0	0	0	0	0	CCOBIX[2:0]		
W								
Reset	0	0	0	0	0	0	0	0

= Unimplemented or Reserved

Figure 29-7. FCCOB Index Register (FCCOBIX)

CCOBIX bits are readable and writable while remaining bits read 0 and are not writable.

Table 29-12. FCCOBIX Field Descriptions

Field	Description
2–0 CCOBIX[1:0]	**Common Command Register Index**— The CCOBIX bits are used to select which word of the FCCOB register array is being read or written to. See 29.3.2.11 Flash Common Command Object Register (FCCOB)," for more details.

29.3.2.4 Flash Reserved0 Register (FRSV0)

This Flash register is reserved for factory testing.

Offset Module Base + 0x000C

	7	6	5	4	3	2	1	0
R	0	0	0	0	0	0	0	0
W								
Reset	0	0	0	0	0	0	0	0

= Unimplemented or Reserved

Figure 29-8. Flash Reserved0 Register (FRSV0)

All bits in the FRSV0 register read 0 and are not writable.

29.3.2.5 Flash Configuration Register (FCNFG)

The FCNFG register enables the Flash command complete interrupt and forces ECC faults on Flash array read access from the CPU.

Offset Module Base + 0x0004

	7	6	5	4	3	2	1	0
R	CCIE	0	0	IGNSF	0	0	FDFD	FSFD
W								
Reset	0	0	0	0	0	0	0	0

= Unimplemented or Reserved

Figure 29-9. Flash Configuration Register (FCNFG)

CCIE, IGNSF, FDFD, and FSFD bits are readable and writable while remaining bits read 0 and are not writable.

Table 29-13. FCNFG Field Descriptions

Field	Description
7 CCIE	**Command Complete Interrupt Enable** — The CCIE bit controls interrupt generation when a Flash command has completed. 0 Command complete interrupt disabled 1 An interrupt will be requested whenever the CCIF flag in the FSTAT register is set (see Section 29.3.2.7)
4 IGNSF	**Ignore Single Bit Fault** — The IGNSF controls single bit fault reporting in the FERSTAT register (see Section 29.3.2.8). 0 All single bit faults detected during array reads are reported 1 Single bit faults detected during array reads are not reported and the single bit fault interrupt will not be generated
1 FDFD	**Force Double Bit Fault Detect** — The FDFD bit allows the user to simulate a double bit fault during Flash array read operations and check the associated interrupt routine. The FDFD bit is cleared by writing a 0 to FDFD. 0 Flash array read operations will set the DFDIF flag in the FERSTAT register only if a double bit fault is detected 1 Any Flash array read operation will force the DFDIF flag in the FERSTAT register to be set (see Section 29.3.2.7) and an interrupt will be generated as long as the DFDIE interrupt enable in the FERCNFG register is set (see Section 29.3.2.6)
0 FSFD	**Force Single Bit Fault Detect** — The FSFD bit allows the user to simulate a single bit fault during Flash array read operations and check the associated interrupt routine. The FSFD bit is cleared by writing a 0 to FSFD. 0 Flash array read operations will set the SFDIF flag in the FERSTAT register only if a single bit fault is detected 1 Flash array read operation will force the SFDIF flag in the FERSTAT register to be set (see Section 29.3.2.7) and an interrupt will be generated as long as the SFDIE interrupt enable in the FERCNFG register is set (see Section 29.3.2.6)

29.3.2.6 Flash Error Configuration Register (FERCNFG)

The FERCNFG register enables the Flash error interrupts for the FERSTAT flags.

Offset Module Base + 0x0005

	7	6	5	4	3	2	1	0
R	0	0	0	0	0	0	DFDIE	SFDIE
W								
Reset	0	0	0	0	0	0	0	0

= Unimplemented or Reserved

Figure 29-10. Flash Error Configuration Register (FERCNFG)

All assigned bits in the FERCNFG register are readable and writable.

Table 29-14. FERCNFG Field Descriptions

Field	Description
1 DFDIE	**Double Bit Fault Detect Interrupt Enable** — The DFDIE bit controls interrupt generation when a double bit fault is detected during a Flash block read operation. 0 DFDIF interrupt disabled 1 An interrupt will be requested whenever the DFDIF flag is set (see Section 29.3.2.8)
0 SFDIE	**Single Bit Fault Detect Interrupt Enable** — The SFDIE bit controls interrupt generation when a single bit fault is detected during a Flash block read operation. 0 SFDIF interrupt disabled whenever the SFDIF flag is set (see Section 29.3.2.8) 1 An interrupt will be requested whenever the SFDIF flag is set (see Section 29.3.2.8)

29.3.2.7 Flash Status Register (FSTAT)

The FSTAT register reports the operational status of the Flash module.

Offset Module Base + 0x0006

	7	6	5	4	3	2	1	0
R	CCIF	0	ACCERR	FPVIOL	MGBUSY	RSVD	MGSTAT[1:0]	
W								
Reset	1	0	0	0	0	0	0[1]	0[1]

= Unimplemented or Reserved

Figure 29-11. Flash Status Register (FSTAT)

[1] Reset value can deviate from the value shown if a double bit fault is detected during the reset sequence (see Section 29.6).

CCIF, ACCERR, and FPVIOL bits are readable and writable, MGBUSY and MGSTAT bits are readable but not writable, while remaining bits read 0 and are not writable.

Table 29-15. FSTAT Field Descriptions

Field	Description
7 CCIF	**Command Complete Interrupt Flag** — The CCIF flag indicates that a Flash command has completed. The CCIF flag is cleared by writing a 1 to CCIF to launch a command and CCIF will stay low until command completion or command violation. 0 Flash command in progress 1 Flash command has completed
5 ACCERR	**Flash Access Error Flag** — The ACCERR bit indicates an illegal access has occurred to the Flash memory caused by either a violation of the command write sequence (see Section 29.4.4.2) or issuing an illegal Flash command. While ACCERR is set, the CCIF flag cannot be cleared to launch a command. The ACCERR bit is cleared by writing a 1 to ACCERR. Writing a 0 to the ACCERR bit has no effect on ACCERR. 0 No access error detected 1 Access error detected
4 FPVIOL	**Flash Protection Violation Flag** —The FPVIOL bit indicates an attempt was made to program or erase an address in a protected area of P-Flash or EEPROM memory during a command write sequence. The FPVIOL bit is cleared by writing a 1 to FPVIOL. Writing a 0 to the FPVIOL bit has no effect on FPVIOL. While FPVIOL is set, it is not possible to launch a command or start a command write sequence. 0 No protection violation detected 1 Protection violation detected

Table 29-15. FSTAT Field Descriptions (continued)

Field	Description
3 MGBUSY	**Memory Controller Busy Flag** — The MGBUSY flag reflects the active state of the Memory Controller. 0 Memory Controller is idle 1 Memory Controller is busy executing a Flash command (CCIF = 0)
2 RSVD	**Reserved Bit** — This bit is reserved and always reads 0.
1–0 MGSTAT[1:0]	**Memory Controller Command Completion Status Flag** — One or more MGSTAT flag bits are set if an error is detected during execution of a Flash command or during the Flash reset sequence. See Section 29.4.6, “Flash Command Description,” and Section 29.6, “Initialization” for details.

29.3.2.8 Flash Error Status Register (FERSTAT)

The FERSTAT register reflects the error status of internal Flash operations.

Offset Module Base + 0x0007

	7	6	5	4	3	2	1	0
R	0	0	0	0	0	0	DFDIF	SFDIF
W								
Reset	0	0	0	0	0	0	0	0

= Unimplemented or Reserved

Figure 29-12. Flash Error Status Register (FERSTAT)

All flags in the FERSTAT register are readable and only writable to clear the flag.

Table 29-16. FERSTAT Field Descriptions

Field	Description
1 DFDIF	**Double Bit Fault Detect Interrupt Flag** — The setting of the DFDIF flag indicates that a double bit fault was detected in the stored parity and data bits during a Flash array read operation or that a Flash array read operation returning invalid data was attempted on a Flash block that was under a Flash command operation.[1] The DFDIF flag is cleared by writing a 1 to DFDIF. Writing a 0 to DFDIF has no effect on DFDIF.[2] 0 No double bit fault detected 1 Double bit fault detected or a Flash array read operation returning invalid data was attempted while command running
0 SFDIF	**Single Bit Fault Detect Interrupt Flag** — With the IGNSF bit in the FCNFG register clear, the SFDIF flag indicates that a single bit fault was detected in the stored parity and data bits during a Flash array read operation or that a Flash array read operation returning invalid data was attempted on a Flash block that was under a Flash command operation.[1] The SFDIF flag is cleared by writing a 1 to SFDIF. Writing a 0 to SFDIF has no effect on SFDIF. 0 No single bit fault detected 1 Single bit fault detected and corrected or a Flash array read operation returning invalid data was attempted while command running

1 The single bit fault and double bit fault flags are mutually exclusive for parity errors (an ECC fault occurrence can be either single fault or double fault but never both). A simultaneous access collision (Flash array read operation returning invalid data attempted while command running) is indicated when both SFDIF and DFDIF flags are high.

2 There is a one cycle delay in storing the ECC DFDIF and SFDIF fault flags in this register. At least one NOP is required after a flash memory read before checking FERSTAT for the occurrence of ECC errors.

29.3.2.9 P-Flash Protection Register (FPROT)

The FPROT register defines which P-Flash sectors are protected against program and erase operations.

Offset Module Base + 0x0008

	7	6	5	4	3	2	1	0
R	FPOPEN	RNV6	FPHDIS	FPHS[1:0]		FPLDIS	FPLS[1:0]	
W								
Reset	F[1]	F[1]	F[1]	F[1]	F[1]	F[1]	F[1]	F[1]

= Unimplemented or Reserved

Figure 29-13. Flash Protection Register (FPROT)

[1] Loaded from IFR Flash configuration field, during reset sequence.

The (unreserved) bits of the FPROT register are writable with the restriction that the size of the protected region can only be increased (see Section 29.3.2.9.1, “P-Flash Protection Restrictions,” and Table 29-21).

During the reset sequence, the FPROT register is loaded with the contents of the P-Flash protection byte in the Flash configuration field at global address 0x3_FF0C located in P-Flash memory (see Table 29-4) as indicated by reset condition ‘F’ in Figure 29-13. To change the P-Flash protection that will be loaded during the reset sequence, the upper sector of the P-Flash memory must be unprotected, then the P-Flash protection byte must be reprogrammed. If a double bit fault is detected while reading the P-Flash phrase containing the P-Flash protection byte during the reset sequence, the FPOPEN bit will be cleared and remaining bits in the FPROT register will be set to leave the P-Flash memory fully protected.

Trying to alter data in any protected area in the P-Flash memory will result in a protection violation error and the FPVIOL bit will be set in the FSTAT register. The block erase of a P-Flash block is not possible if any of the P-Flash sectors contained in the same P-Flash block are protected.

Table 29-17. FPROT Field Descriptions

Field	Description
7 FPOPEN	**Flash Protection Operation Enable** — The FPOPEN bit determines the protection function for program or erase operations as shown in Table 29-18 for the P-Flash block. 0 When FPOPEN is clear, the FPHDIS and FPLDIS bits define unprotected address ranges as specified by the corresponding FPHS and FPLS bits 1 When FPOPEN is set, the FPHDIS and FPLDIS bits enable protection for the address range specified by the corresponding FPHS and FPLS bits
6 RNV[6]	**Reserved Nonvolatile Bit** — The RNV bit should remain in the erased state for future enhancements.
5 FPHDIS	**Flash Protection Higher Address Range Disable** — The FPHDIS bit determines whether there is a protected/unprotected area in a specific region of the P-Flash memory ending with global address 0x3_FFFF. 0 Protection/Unprotection enabled 1 Protection/Unprotection disabled
4–3 FPHS[1:0]	**Flash Protection Higher Address Size** — The FPHS bits determine the size of the protected/unprotected area in P-Flash memory as shown inTable 29-19. The FPHS bits can only be written to while the FPHDIS bit is set.

Table 29-17. FPROT Field Descriptions (continued)

Field	Description
2 FPLDIS	**Flash Protection Lower Address Range Disable** — The FPLDIS bit determines whether there is a protected/unprotected area in a specific region of the P-Flash memory beginning with global address 0x3_8000. 0 Protection/Unprotection enabled 1 Protection/Unprotection disabled
1–0 FPLS[1:0]	**Flash Protection Lower Address Size** — The FPLS bits determine the size of the protected/unprotected area in P-Flash memory as shown in Table 29-20. The FPLS bits can only be written to while the FPLDIS bit is set.

Table 29-18. P-Flash Protection Function

FPOPEN	FPHDIS	FPLDIS	Function[1]
1	1	1	No P-Flash Protection
1	1	0	Protected Low Range
1	0	1	Protected High Range
1	0	0	Protected High and Low Ranges
0	1	1	Full P-Flash Memory Protected
0	1	0	Unprotected Low Range
0	0	1	Unprotected High Range
0	0	0	Unprotected High and Low Ranges

1 For range sizes, refer to Table 29-19 and Table 29-20.

Table 29-19. P-Flash Protection Higher Address Range

FPHS[1:0]	Global Address Range	Protected Size
00	0x3_F800–0x3_FFFF	2 Kbytes
01	0x3_F000–0x3_FFFF	4 Kbytes
10	0x3_E000–0x3_FFFF	8 Kbytes
11	0x3_C000–0x3_FFFF	16 Kbytes

Table 29-20. P-Flash Protection Lower Address Range

FPLS[1:0]	Global Address Range	Protected Size
00	0x3_8000–0x3_83FF	1 Kbyte
01	0x3_8000–0x3_87FF	2 Kbytes
10	0x3_8000–0x3_8FFF	4 Kbytes
11	0x3_8000–0x3_9FFF	8 Kbytes

All possible P-Flash protection scenarios are shown in Figure 29-14 . Although the protection scheme is loaded from the Flash memory at global address 0x3_FF0C during the reset sequence, it can be changed by the user. The P-Flash protection scheme can be used by applications requiring reprogramming in single chip mode while providing as much protection as possible if reprogramming is not required.

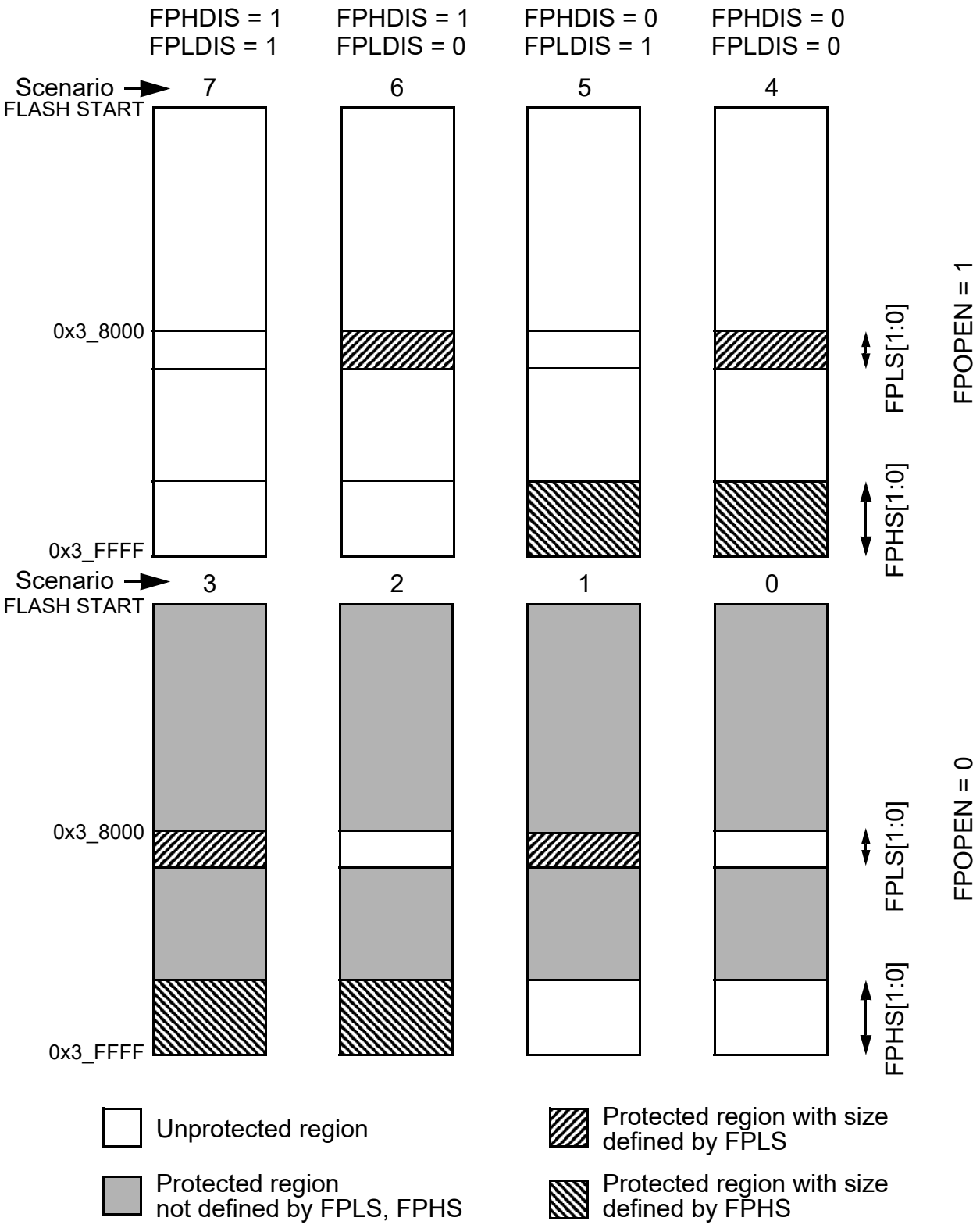

Figure 29-14. P-Flash Protection Scenarios

29.3.2.9.1 P-Flash Protection Restrictions

The general guideline is that P-Flash protection can only be added and not removed. Table 29-21 specifies all valid transitions between P-Flash protection scenarios. Any attempt to write an invalid scenario to the FPROT register will be ignored. The contents of the FPROT register reflect the active protection scenario. See the FPHS and FPLS bit descriptions for additional restrictions.

Table 29-21. P-Flash Protection Scenario Transitions

From Protection Scenario	To Protection Scenario[1]							
	0	1	2	3	4	5	6	7
0	X	X	X	X				
1		X		X				
2			X	X				
3				X				
4				X	X			
5			X	X	X	X		
6		X		X	X		X	
7	X	X	X	X	X	X	X	X

1 Allowed transitions marked with X, see Figure 29-14 for a definition of the scenarios.

29.3.2.10 EEPROM Protection Register (DFPROT)

The DFPROT register defines which EEPROM sectors are protected against program and erase operations.

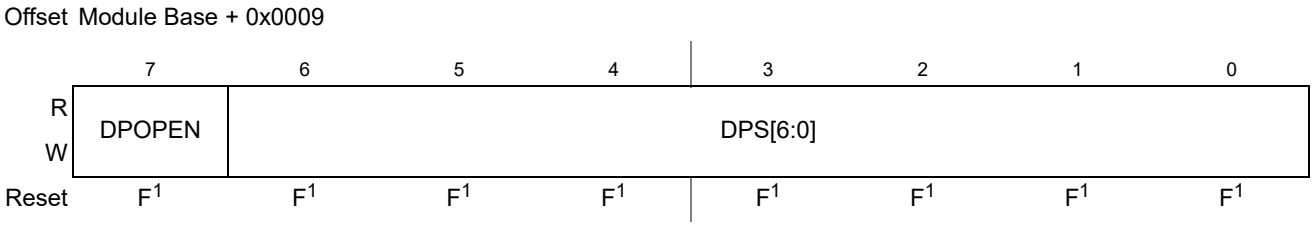

Figure 29-15. EEPROM Protection Register (DFPROT)

1 Loaded from IFR Flash configuration field, during reset sequence.

The (unreserved) bits of the DFPROT register are writable with the restriction that protection can be added but not removed. Writes must increase the DPS value and the DPOPEN bit can only be written from 1 (protection disabled) to 0 (protection enabled). If the DPOPEN bit is set, the state of the DPS bits is irrelevant.

During the reset sequence, fields DPOPEN and DPS of the DFPROT register are loaded with the contents of the EEPROM protection byte in the Flash configuration field at global address 0x3_FF0D located in P-Flash memory (see Table 29-4) as indicated by reset condition F in Table 29-23. To change the EEPROM protection that will be loaded during the reset sequence, the P-Flash sector containing the EEPROM protection byte must be unprotected, then the EEPROM protection byte must be programmed. If a double bit fault is detected while reading the P-Flash phrase containing the EEPROM protection byte during the reset sequence, the DPOPEN bit will be cleared and DPS bits will be set to leave the EEPROM memory fully protected.

Trying to alter data in any protected area in the EEPROM memory will result in a protection violation error and the FPVIOL bit will be set in the FSTAT register. Block erase of the EEPROM memory is not possible if any of the EEPROM sectors are protected.

Table 29-22. DFPROT Field Descriptions

Field	Description
7 DPOPEN	EEPROM Protection Control 0 Enables EEPROM memory protection from program and erase with protected address range defined by DPS bits 1 Disables EEPROM memory protection from program and erase
6–0 DPS[6:0]	**EEPROM Protection Size** — The DPS[6:0] bits determine the size of the protected area in the EEPROM memory, this size increase in step of 32 bytes, as shown in Table 29-23 .

Table 29-23. EEPROM Protection Address Range

DPS[6:0]	Global Address Range	Protected Size
0000000	0x0_0400 – 0x0_041F	32 bytes
0000001	0x0_0400 – 0x0_043F	64 bytes
0000010	0x0_0400 – 0x0_045F	96 bytes
0000011	0x0_0400 – 0x0_047F	128 bytes
0000100	0x0_0400 – 0x0_049F	160 bytes
0000101	0x0_0400 – 0x0_04BF	192 bytes
The Protection Size goes on enlarging in step of 32 bytes, for each DPS value increasing of one. . . .		
1111111	0x0_0400 – 0x0_13FF	4,096 bytes

29.3.2.11 Flash Common Command Object Register (FCCOB)

The FCCOB is an array of six words addressed via the CCOBIX index found in the FCCOBIX register. Byte wide reads and writes are allowed to the FCCOB register.

Offset Module Base + 0x000A

	7	6	5	4	3	2	1	0
R W	CCOB[15:8]							
Reset	0	0	0	0	0	0	0	0

Figure 29-16. Flash Common Command Object High Register (FCCOBHI)

Offset Module Base + 0x000B

	7	6	5	4	3	2	1	0
R W	CCOB[7:0]							
Reset	0	0	0	0	0	0	0	0

Figure 29-17. Flash Common Command Object Low Register (FCCOBLO)

29.3.2.11.1 FCCOB - NVM Command Mode

NVM command mode uses the indexed FCCOB register to provide a command code and its relevant parameters to the Memory Controller. The user first sets up all required FCCOB fields and then initiates the command's execution by writing a 1 to the CCIF bit in the FSTAT register (a 1 written by the user clears the CCIF command completion flag to 0). When the user clears the CCIF bit in the FSTAT register all FCCOB parameter fields are locked and cannot be changed by the user until the command completes (as evidenced by the Memory Controller returning CCIF to 1). Some commands return information to the FCCOB register array.

The generic format for the FCCOB parameter fields in NVM command mode is shown in Table 29-24. The return values are available for reading after the CCIF flag in the FSTAT register has been returned to 1 by the Memory Controller. Writes to the unimplemented parameter fields (CCOBIX = 110 and CCOBIX = 111) are ignored with reads from these fields returning 0x0000.

Table 29-24 shows the generic Flash command format. The high byte of the first word in the CCOB array contains the command code, followed by the parameters for this specific Flash command. For details on the FCCOB settings required by each command, see the Flash command descriptions in Section 29.4.6.

Table 29-24. FCCOB - NVM Command Mode (Typical Usage)

CCOBIX[2:0]	Byte	FCCOB Parameter Fields (NVM Command Mode)
000	HI	FCMD[7:0] defining Flash command
	LO	6'h0, Global address [17:16]
001	HI	Global address [15:8]
	LO	Global address [7:0]

Table 29-24. FCCOB - NVM Command Mode (Typical Usage)

CCOBIX[2:0]	Byte	FCCOB Parameter Fields (NVM Command Mode)
010	HI	Data 0 [15:8]
	LO	Data 0 [7:0]
011	HI	Data 1 [15:8]
	LO	Data 1 [7:0]
100	HI	Data 2 [15:8]
	LO	Data 2 [7:0]
101	HI	Data 3 [15:8]
	LO	Data 3 [7:0]

29.3.2.12 Flash Reserved1 Register (FRSV1)

This Flash register is reserved for factory testing.

Offset Module Base + 0x000C

	7	6	5	4	3	2	1	0
R	0	0	0	0	0	0	0	0
W								
Reset	0	0	0	0	0	0	0	0

= Unimplemented or Reserved

Figure 29-18. Flash Reserved1 Register (FRSV1)

All bits in the FRSV1 register read 0 and are not writable.

29.3.2.13 Flash Reserved2 Register (FRSV2)

This Flash register is reserved for factory testing.

Offset Module Base + 0x000D

	7	6	5	4	3	2	1	0
R	0	0	0	0	0	0	0	0
W								
Reset	0	0	0	0	0	0	0	0

= Unimplemented or Reserved

Figure 29-19. Flash Reserved2 Register (FRSV2)

All bits in the FRSV2 register read 0 and are not writable.

29.3.2.14 Flash Reserved3 Register (FRSV3)

This Flash register is reserved for factory testing.

Offset Module Base + 0x000E

	7	6	5	4	3	2	1	0
R	0	0	0	0	0	0	0	0
W								
Reset	0	0	0	0	0	0	0	0

= Unimplemented or Reserved

Figure 29-20. Flash Reserved3 Register (FRSV3)

All bits in the FRSV3 register read 0 and are not writable.

29.3.2.15 Flash Reserved4 Register (FRSV4)

This Flash register is reserved for factory testing.

Offset Module Base + 0x000F

	7	6	5	4	3	2	1	0
R	0	0	0	0	0	0	0	0
W								
Reset	0	0	0	0	0	0	0	0

= Unimplemented or Reserved

Figure 29-21. Flash Reserved4 Register (FRSV4)

All bits in the FRSV4 register read 0 and are not writable.

29.3.2.16 Flash Option Register (FOPT)

The FOPT register is the Flash option register.

Offset Module Base + 0x0010

	7	6	5	4	3	2	1	0
R	NV[7:0]							
W								
Reset	F[1]	F[1]	F[1]	F[1]	F[1]	F[1]	F[1]	F[1]

= Unimplemented or Reserved

Figure 29-22. Flash Option Register (FOPT)

1 Loaded from IFR Flash configuration field, during reset sequence.

All bits in the FOPT register are readable but are not writable.

During the reset sequence, the FOPT register is loaded from the Flash nonvolatile byte in the Flash configuration field at global address 0x3_FF0E located in P-Flash memory (see Table 29-4) as indicated by reset condition F in Figure 29-22. If a double bit fault is detected while reading the P-Flash phrase containing the Flash nonvolatile byte during the reset sequence, all bits in the FOPT register will be set.

Table 29-25. FOPT Field Descriptions

Field	Description
7–0 NV[7:0]	**Nonvolatile Bits** — The NV[7:0] bits are available as nonvolatile bits. Refer to the device user guide for proper use of the NV bits.

29.3.2.17 Flash Reserved5 Register (FRSV5)

This Flash register is reserved for factory testing.

Offset Module Base + 0x0011

	7	6	5	4	3	2	1	0
R	0	0	0	0	0	0	0	0
W								
Reset	0	0	0	0	0	0	0	0

= Unimplemented or Reserved

Figure 29-23. Flash Reserved5 Register (FRSV5)

All bits in the FRSV5 register read 0 and are not writable.

29.3.2.18 Flash Reserved6 Register (FRSV6)

This Flash register is reserved for factory testing.

Offset Module Base + 0x0012

	7	6	5	4	3	2	1	0
R	0	0	0	0	0	0	0	0
W								
Reset	0	0	0	0	0	0	0	0

= Unimplemented or Reserved

Figure 29-24. Flash Reserved6 Register (FRSV6)

All bits in the FRSV6 register read 0 and are not writable.

29.3.2.19 Flash Reserved7 Register (FRSV7)

This Flash register is reserved for factory testing.

Offset Module Base + 0x0013

	7	6	5	4	3	2	1	0
R	0	0	0	0	0	0	0	0
W								
Reset	0	0	0	0	0	0	0	0

= Unimplemented or Reserved

Figure 29-25. Flash Reserved7 Register (FRSV7)

All bits in the FRSV7 register read 0 and are not writable.

29.4 Functional Description

29.4.1 Modes of Operation

The FTMRG128K1 module provides the modes of operation normal and special . The operating mode is determined by module-level inputs and affects the FCLKDIV, FCNFG, and DFPROT registers (see Table 29-27).

29.4.2 IFR Version ID Word

The version ID word is stored in the IFR at address 0x0_40B6. The contents of the word are defined in Table 29-26.

Table 29-26. IFR Version ID Fields

[15:4]	[3:0]
Reserved	VERNUM

- VERNUM: Version number. The first version is number 0b_0001 with both 0b_0000 and 0b_1111 meaning ‘none’.

29.4.3 Internal NVM resource (NVMRES)

IFR is an internal NVM resource readable by CPU , when NVMRES is active. The IFR fields are shown in Table 29-5.

The NVMRES global address map is shown in Table 29-6.

29.4.4 Flash Command Operations

Flash command operations are used to modify Flash memory contents.

The next sections describe:

- How to write the FCLKDIV register that is used to generate a time base (FCLK) derived from BUSCLK for Flash program and erase command operations
- The command write sequence used to set Flash command parameters and launch execution
- Valid Flash commands available for execution, according to MCU functional mode and MCU security state.

29.4.4.1 Writing the FCLKDIV Register

Prior to issuing any Flash program or erase command after a reset, the user is required to write the FCLKDIV register to divide BUSCLK down to a target FCLK of 1 MHz. Table 29-8 shows recommended values for the FDIV field based on BUSCLK frequency.

NOTE

Programming or erasing the Flash memory cannot be performed if the bus clock runs at less than 0.8 MHz. Setting FDIV too high can destroy the Flash memory due to overstress. Setting FDIV too low can result in incomplete programming or erasure of the Flash memory cells.

When the FCLKDIV register is written, the FDIVLD bit is set automatically. If the FDIVLD bit is 0, the FCLKDIV register has not been written since the last reset. If the FCLKDIV register has not been written, any Flash program or erase command loaded during a command write sequence will not execute and the ACCERR bit in the FSTAT register will set.

29.4.4.2 Command Write Sequence

The Memory Controller will launch all valid Flash commands entered using a command write sequence.

Before launching a command, the ACCERR and FPVIOL bits in the FSTAT register must be clear (see Section 29.3.2.7) and the CCIF flag should be tested to determine the status of the current command write sequence. If CCIF is 0, the previous command write sequence is still active, a new command write sequence cannot be started, and all writes to the FCCOB register are ignored.

29.4.4.2.1 Define FCCOB Contents

The FCCOB parameter fields must be loaded with all required parameters for the Flash command being executed. Access to the FCCOB parameter fields is controlled via the CCOBIX bits in the FCCOBIX register (see Section 29.3.2.3).

The contents of the FCCOB parameter fields are transferred to the Memory Controller when the user clears the CCIF command completion flag in the FSTAT register (writing 1 clears the CCIF to 0). The CCIF flag will remain clear until the Flash command has completed. Upon completion, the Memory Controller will return CCIF to 1 and the FCCOB register will be used to communicate any results. The flow for a generic command write sequence is shown in Figure 29-26.

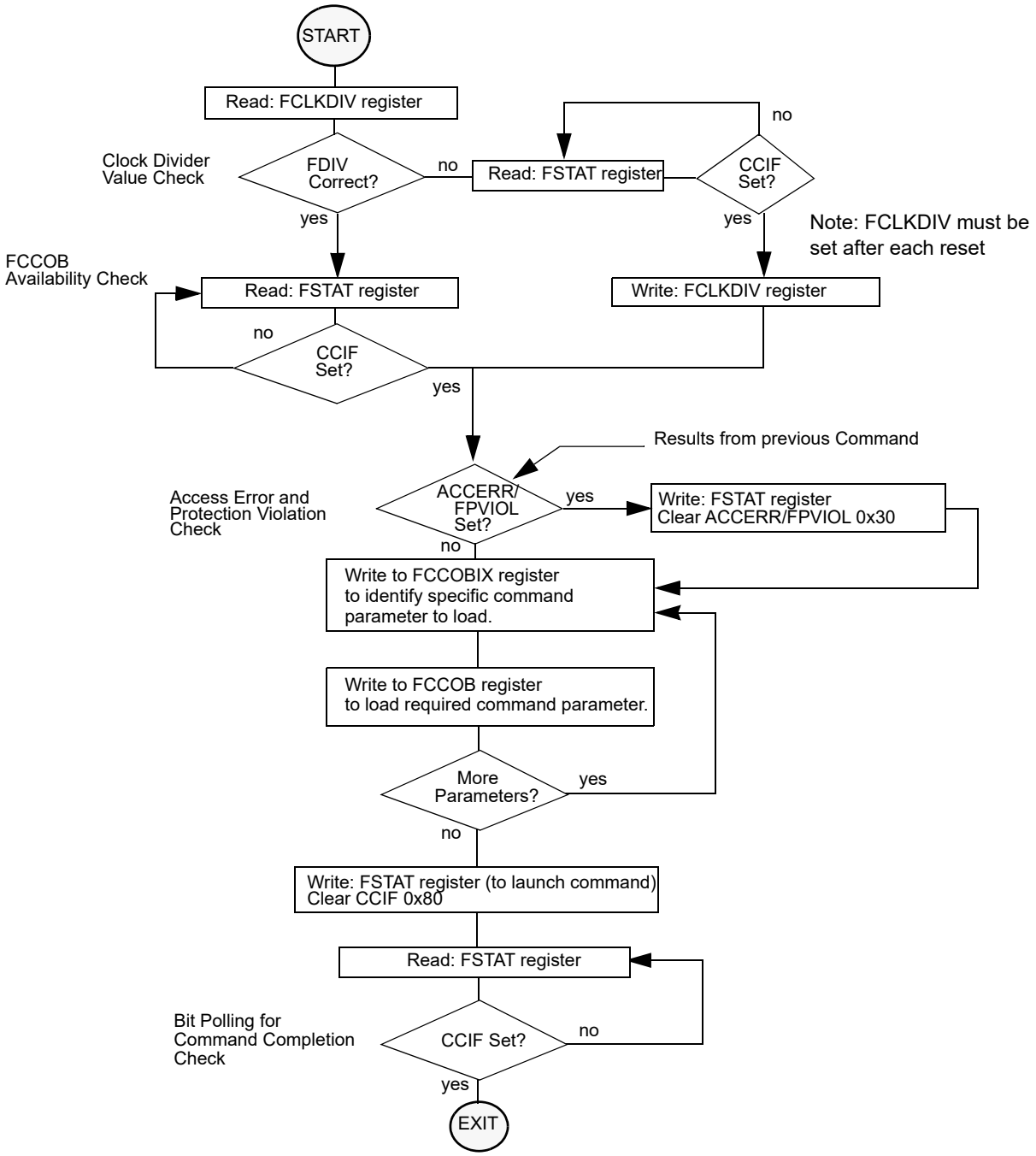

Figure 29-26. Generic Flash Command Write Sequence Flowchart

29.4.4.3 Valid Flash Module Commands

Table 29-27 present the valid Flash commands, as enabled by the combination of the functional MCU mode (Normal SingleChip NS, Special Singlechip SS) with the MCU security state (Unsecured, Secured).

Special Singlechip mode is selected by input mmc_ss_mode_ts2 asserted. MCU Secured state is selected by input mmc_secure input asserted.

Table 29-27. Flash Commands by Mode and Security State

FCMD	Command	Unsecured		Secured	
		NS[1]	SS[2]	NS[3]	SS[4]
0x01	Erase Verify All Blocks	*	*	*	*
0x02	Erase Verify Block	*	*	*	*
0x03	Erase Verify P-Flash Section	*	*	*	
0x04	Read Once	*	*	*	
0x06	Program P-Flash	*	*	*	
0x07	Program Once	*	*	*	
0x08	Erase All Blocks		*		*
0x09	Erase Flash Block	*	*	*	
0x0A	Erase P-Flash Sector	*	*	*	
0x0B	Unsecure Flash		*		*
0x0C	Verify Backdoor Access Key	*		*	
0x0D	Set User Margin Level	*	*	*	
0x0E	Set Field Margin Level		*		
0x10	Erase Verify EEPROM Section	*	*	*	
0x11	Program EEPROM	*	*	*	
0x12	Erase EEPROM Sector	*	*	*	

1 Unsecured Normal Single Chip mode
2 Unsecured Special Single Chip mode.
3 Secured Normal Single Chip mode.
4 Secured Special Single Chip mode.

29.4.4.4 P-Flash Commands

Table 29-28 summarizes the valid P-Flash commands along with the effects of the commands on the P-Flash block and other resources within the Flash module.

Table 29-28. P-Flash Commands

FCMD	Command	Function on P-Flash Memory
0x01	Erase Verify All Blocks	Verify that all P-Flash (and EEPROM) blocks are erased.

Table 29-28. P-Flash Commands

FCMD	Command	Function on P-Flash Memory
0x02	Erase Verify Block	Verify that a P-Flash block is erased.
0x03	Erase Verify P-Flash Section	Verify that a given number of words starting at the address provided are erased.
0x04	Read Once	Read a dedicated 64 byte field in the nonvolatile information register in P-Flash block that was previously programmed using the Program Once command.
0x06	Program P-Flash	Program a phrase in a P-Flash block.
0x07	Program Once	Program a dedicated 64 byte field in the nonvolatile information register in P-Flash block that is allowed to be programmed only once.
0x08	Erase All Blocks	Erase all P-Flash (and EEPROM) blocks. An erase of all Flash blocks is only possible when the FPLDIS, FPHDIS, and FPOPEN bits in the FPROT register and the DPOPEN bit in the DFPROT register are set prior to launching the command.
0x09	Erase Flash Block	Erase a P-Flash (or EEPROM) block. An erase of the full P-Flash block is only possible when FPLDIS, FPHDIS and FPOPEN bits in the FPROT register are set prior to launching the command.
0x0A	Erase P-Flash Sector	Erase all bytes in a P-Flash sector.
0x0B	Unsecure Flash	Supports a method of releasing MCU security by erasing all P-Flash (and EEPROM) blocks and verifying that all P-Flash (and EEPROM) blocks are erased.
0x0C	Verify Backdoor Access Key	Supports a method of releasing MCU security by verifying a set of security keys.
0x0D	Set User Margin Level	Specifies a user margin read level for all P-Flash blocks.
0x0E	Set Field Margin Level	Specifies a field margin read level for all P-Flash blocks (special modes only).

29.4.4.5 EEPROM Commands

Table 29-29 summarizes the valid EEPROM commands along with the effects of the commands on the EEPROM block.

Table 29-29. EEPROM Commands

FCMD	Command	Function on EEPROM Memory
0x01	Erase Verify All Blocks	Verify that all EEPROM (and P-Flash) blocks are erased.
0x02	Erase Verify Block	Verify that the EEPROM block is erased.

Table 29-29. EEPROM Commands

FCMD	Command	Function on EEPROM Memory
0x08	Erase All Blocks	Erase all EEPROM (and P-Flash) blocks. An erase of all Flash blocks is only possible when the FPLDIS, FPHDIS, and FPOPEN bits in the FPROT register and the DPOPEN bit in the DFPROT register are set prior to launching the command.
0x09	Erase Flash Block	Erase a EEPROM (or P-Flash) block. An erase of the full EEPROM block is only possible when DPOPEN bit in the DFPROT register is set prior to launching the command.
0x0B	Unsecure Flash	Supports a method of releasing MCU security by erasing all EEPROM (and P-Flash) blocks and verifying that all EEPROM (and P-Flash) blocks are erased.
0x0D	Set User Margin Level	Specifies a user margin read level for the EEPROM block.
0x0E	Set Field Margin Level	Specifies a field margin read level for the EEPROM block (special modes only).
0x10	Erase Verify EEPROM Section	Verify that a given number of words starting at the address provided are erased.
0x11	Program EEPROM	Program up to four words in the EEPROM block.
0x12	Erase EEPROM Sector	Erase all bytes in a sector of the EEPROM block.

29.4.5 Allowed Simultaneous P-Flash and EEPROM Operations

Only the operations marked ‘OK’ in Table 29-30 are permitted to be run simultaneously on the Program Flash and EEPROM blocks. Some operations cannot be executed simultaneously because certain hardware resources are shared by the two memories. The priority has been placed on permitting Program Flash reads while program and erase operations execute on the EEPROM, providing read (P-Flash) while write (EEPROM) functionality.

Table 29-30. Allowed P-Flash and EEPROM Simultaneous Operations

	EEPROM				
Program Flash	**Read**	**Margin Read[1]**	**Program**	**Sector Erase**	**Mass Erase[2]**
Read		OK	OK	OK	
Margin Read[1]					
Program					
Sector Erase					
Mass Erase[2]					OK

1 A ‘Margin Read’ is any read after executing the margin setting commands ‘Set User Margin Level’ or ‘Set Field Margin Level’ with anything but the ‘normal’ level specified. See the Note on margin settings in Section 29.4.6.12 and Section 29.4.6.13.

2 The ‘Mass Erase’ operations are commands ‘Erase All Blocks’ and ‘Erase Flash Block’

29.4.6 Flash Command Description

This section provides details of all available Flash commands launched by a command write sequence. The ACCERR bit in the FSTAT register will be set during the command write sequence if any of the following illegal steps are performed, causing the command not to be processed by the Memory Controller:

- Starting any command write sequence that programs or erases Flash memory before initializing the FCLKDIV register
- Writing an invalid command as part of the command write sequence
- For additional possible errors, refer to the error handling table provided for each command

If a Flash block is read during execution of an algorithm (CCIF = 0) on that same block, the read operation will return invalid data if both flags SFDIF and DFDIF are set. If the SFDIF or DFDIF flags were not previously set when the invalid read operation occurred, both the SFDIF and DFDIF flags will be set.

If the ACCERR or FPVIOL bits are set in the FSTAT register, the user must clear these bits before starting any command write sequence (see Section 29.3.2.7).

CAUTION

A Flash word or phrase must be in the erased state before being programmed. Cumulative programming of bits within a Flash word or phrase is not allowed.

29.4.6.1 Erase Verify All Blocks Command

The Erase Verify All Blocks command will verify that all P-Flash and EEPROM blocks have been erased.

Table 29-31. Erase Verify All Blocks Command FCCOB Requirements

CCOBIX[2:0]	FCCOB Parameters	
000	0x01	Not required

Upon clearing CCIF to launch the Erase Verify All Blocks command, the Memory Controller will verify that the entire Flash memory space is erased. The CCIF flag will set after the Erase Verify All Blocks operation has completed. If all blocks are not erased, it means blank check failed, both MGSTAT bits will be set.

Table 29-32. Erase Verify All Blocks Command Error Handling

Register	Error Bit	Error Condition
FSTAT	ACCERR	Set if CCOBIX[2:0] != 000 at command launch
	FPVIOL	None
	MGSTAT1	Set if any errors have been encountered during the reador if blank check failed .
	MGSTAT0	Set if any non-correctable errors have been encountered during the read or if blank check failed.

29.4.6.2 Erase Verify Block Command

The Erase Verify Block command allows the user to verify that an entire P-Flash or EEPROM block has been erased. The FCCOB FlashBlockSelectionCode[1:0] bits determine which block must be verified.

Table 29-33. Erase Verify Block Command FCCOB Requirements

CCOBIX[2:0]	FCCOB Parameters	
000	0x02	Flash block selection code [1:0]. See Table 29-34

Table 29-34. Flash block selection code description

Selection code[1:0]	Flash block to be verified
00	EEPROM
01	Invalid (ACCERR)
10	P-Flash
11	P-Flash

Upon clearing CCIF to launch the Erase Verify Block command, the Memory Controller will verify that the selected P-Flash or EEPROM block is erased. The CCIF flag will set after the Erase Verify Block operation has completed.If the block is not erased, it means blank check failed, both MGSTAT bits will be set.

Table 29-35. Erase Verify Block Command Error Handling

Register	Error Bit	Error Condition
FSTAT	ACCERR	Set if CCOBIX[2:0] != 000 at command launch
		Set if an invalid FlashBlockSelectionCode[1:0] is supplied
	FPVIOL	None
	MGSTAT1	Set if any errors have been encountered during the read or if blank check failed.
	MGSTAT0	Set if any non-correctable errors have been encountered during the read or if blank check failed.

29.4.6.3 Erase Verify P-Flash Section Command

The Erase Verify P-Flash Section command will verify that a section of code in the P-Flash memory is erased. The Erase Verify P-Flash Section command defines the starting point of the code to be verified and the number of phrases.

Table 29-36. Erase Verify P-Flash Section Command FCCOB Requirements

CCOBIX[2:0]	FCCOB Parameters	
000	0x03	Global address [17:16] of a P-Flash block
001	Global address [15:0] of the first phrase to be verified	
010	Number of phrases to be verified	

Upon clearing CCIF to launch the Erase Verify P-Flash Section command, the Memory Controller will verify the selected section of Flash memory is erased. The CCIF flag will set after the Erase Verify P-Flash Section operation has completed. If the section is not erased, it means blank check failed, both MGSTAT bits will be set.

Table 29-37. Erase Verify P-Flash Section Command Error Handling

Register	Error Bit	Error Condition
FSTAT	ACCERR	Set if CCOBIX[2:0] != 010 at command launch
		Set if command not available in current mode (see Table 29-27)
		Set if an invalid global address [17:0] is supplied (see Table 29-3)
		Set if a misaligned phrase address is supplied (global address [2:0] != 000)
		Set if the requested section crosses a the P-Flash address boundary
	FPVIOL	None
	MGSTAT1	Set if any errors have been encountered during the read or if blank check failed.
	MGSTAT0	Set if any non-correctable errors have been encountered during the read or if blank check failed.

29.4.6.4 Read Once Command

The Read Once command provides read access to a reserved 64 byte field (8 phrases) located in the nonvolatile information register of P-Flash. The Read Once field is programmed using the Program Once command described in Section 29.4.6.6. The Read Once command must not be executed from the Flash block containing the Program Once reserved field to avoid code runaway.

Table 29-38. Read Once Command FCCOB Requirements

CCOBIX[2:0]	FCCOB Parameters	
000	0x04	Not Required
001	Read Once phrase index (0x0000 - 0x0007)	
010	Read Once word 0 value	
011	Read Once word 1 value	
100	Read Once word 2 value	
101	Read Once word 3 value	

Upon clearing CCIF to launch the Read Once command, a Read Once phrase is fetched and stored in the FCCOB indexed register. The CCIF flag will set after the Read Once operation has completed. Valid phrase index values for the Read Once command range from 0x0000 to 0x0007. During execution of the Read Once command, any attempt to read addresses within P-Flash block will return invalid data.

Table 29-39. Read Once Command Error Handling

Register	Error Bit	Error Condition
FSTAT	ACCERR	Set if CCOBIX[2:0] != 001 at command launch
		Set if command not available in current mode (see Table 29-27)
		Set if an invalid phrase index is supplied
	FPVIOL	None
	MGSTAT1	Set if any errors have been encountered during the read
	MGSTAT0	Set if any non-correctable errors have been encountered during the read

29.4.6.5 Program P-Flash Command

The Program P-Flash operation will program a previously erased phrase in the P-Flash memory using an embedded algorithm.

CAUTION

A P-Flash phrase must be in the erased state before being programmed. Cumulative programming of bits within a Flash phrase is not allowed.

Table 29-40. Program P-Flash Command FCCOB Requirements

CCOBIX[2:0]	FCCOB Parameters	
000	0x06	Global address [17:16] to identify P-Flash block
001	Global address [15:0] of phrase location to be programmed[1]	
010	Word 0 program value	
011	Word 1 program value	
100	Word 2 program value	
101	Word 3 program value	

1 Global address [2:0] must be 000

Upon clearing CCIF to launch the Program P-Flash command, the Memory Controller will program the data words to the supplied global address and will then proceed to verify the data words read back as expected. The CCIF flag will set after the Program P-Flash operation has completed.

Table 29-41. Program P-Flash Command Error Handling

Register	Error Bit	Error Condition
FSTAT	ACCERR	Set if CCOBIX[2:0] != 101 at command launch
		Set if command not available in current mode (see Table 29-27)
		Set if an invalid global address [17:0] is supplied (see Table 29-3)
		Set if a misaligned phrase address is supplied (global address [2:0] != 000)
	FPVIOL	Set if the global address [17:0] points to a protected area
	MGSTAT1	Set if any errors have been encountered during the verify operation
	MGSTAT0	Set if any non-correctable errors have been encountered during the verify operation

29.4.6.6 Program Once Command

The Program Once command restricts programming to a reserved 64 byte field (8 phrases) in the nonvolatile information register located in P-Flash. The Program Once reserved field can be read using the Read Once command as described in Section 29.4.6.4. The Program Once command must only be issued once since the nonvolatile information register in P-Flash cannot be erased. The Program Once command must not be executed from the Flash block containing the Program Once reserved field to avoid code runaway.

Table 29-42. Program Once Command FCCOB Requirements

CCOBIX[2:0]	FCCOB Parameters	
000	0x07	Not Required
001	Program Once phrase index (0x0000 - 0x0007)	
010	Program Once word 0 value	
011	Program Once word 1 value	
100	Program Once word 2 value	
101	Program Once word 3 value	

Upon clearing CCIF to launch the Program Once command, the Memory Controller first verifies that the selected phrase is erased. If erased, then the selected phrase will be programmed and then verified with read back. The CCIF flag will remain clear, setting only after the Program Once operation has completed.

The reserved nonvolatile information register accessed by the Program Once command cannot be erased and any attempt to program one of these phrases a second time will not be allowed. Valid phrase index values for the Program Once command range from 0x0000 to 0x0007. During execution of the Program Once command, any attempt to read addresses within P-Flash will return invalid data.

Table 29-43. Program Once Command Error Handling

Register	Error Bit	Error Condition
FSTAT	ACCERR	Set if CCOBIX[2:0] != 101 at command launch
		Set if command not available in current mode (see Table 29-27)
		Set if an invalid phrase index is supplied
		Set if the requested phrase has already been programmed[1]
	FPVIOL	None
	MGSTAT1	Set if any errors have been encountered during the verify operation
	MGSTAT0	Set if any non-correctable errors have been encountered during the verify operation

1 If a Program Once phrase is initially programmed to 0xFFFF_FFFF_FFFF_FFFF, the Program Once command will be allowed to execute again on that same phrase.

29.4.6.7 Erase All Blocks Command

The Erase All Blocks operation will erase the entire P-Flash and EEPROM memory space.

Table 29-44. Erase All Blocks Command FCCOB Requirements

CCOBIX[2:0]	FCCOB Parameters	
000	0x08	Not required

Upon clearing CCIF to launch the Erase All Blocks command, the Memory Controller will erase the entire Flash memory space and verify that it is erased. If the Memory Controller verifies that the entire Flash memory space was properly erased, security will be released. During the execution of this command (CCIF=0) the user must not write to any Flash module register. The CCIF flag will set after the Erase All Blocks operation has completed.

Table 29-45. Erase All Blocks Command Error Handling

Register	Error Bit	Error Condition
FSTAT	ACCERR	Set if CCOBIX[2:0] != 000 at command launch
		Set if command not available in current mode (see Table 29-27)
	FPVIOL	Set if any area of the P-Flash or EEPROM memory is protected
	MGSTAT1	Set if any errors have been encountered during the verify operation
	MGSTAT0	Set if any non-correctable errors have been encountered during the verify operation

29.4.6.8 Erase Flash Block Command

The Erase Flash Block operation will erase all addresses in a P-Flash or EEPROM block.

Table 29-46. Erase Flash Block Command FCCOB Requirements

CCOBIX[2:0]	FCCOB Parameters	
000	0x09	Global address [17:16] to identify Flash block
001	Global address [15:0] in Flash block to be erased	

Upon clearing CCIF to launch the Erase Flash Block command, the Memory Controller will erase the selected Flash block and verify that it is erased. The CCIF flag will set after the Erase Flash Block operation has completed.

Table 29-47. Erase Flash Block Command Error Handling

Register	Error Bit	Error Condition
FSTAT	ACCERR	Set if CCOBIX[2:0] != 001 at command launch
		Set if command not available in current mode (see Table 29-27)
		Set if an invalid global address [17:16] is supplied
		Set if the supplied P-Flash address is not phrase-aligned or if the EEPROM address is not word-aligned
	FPVIOL	Set if an area of the selected Flash block is protected
	MGSTAT1	Set if any errors have been encountered during the verify operation
	MGSTAT0	Set if any non-correctable errors have been encountered during the verify operation

29.4.6.9 Erase P-Flash Sector Command

The Erase P-Flash Sector operation will erase all addresses in a P-Flash sector.

Table 29-48. Erase P-Flash Sector Command FCCOB Requirements

CCOBIX[2:0]	FCCOB Parameters	
000	0x0A	Global address [17:16] to identify P-Flash block to be erased
001	Global address [15:0] anywhere within the sector to be erased. Refer to Section 29.1.2.1 for the P-Flash sector size.	

Upon clearing CCIF to launch the Erase P-Flash Sector command, the Memory Controller will erase the selected Flash sector and then verify that it is erased. The CCIF flag will be set after the Erase P-Flash Sector operation has completed.

Table 29-49. Erase P-Flash Sector Command Error Handling

Register	Error Bit	Error Condition
FSTAT	ACCERR	Set if CCOBIX[2:0] != 001 at command launch
		Set if command not available in current mode (see Table 29-27)
		Set if an invalid global address [17:16] is supplied (see Table 29-3)
		Set if a misaligned phrase address is supplied (global address [2:0] != 000)
	FPVIOL	Set if the selected P-Flash sector is protected
	MGSTAT1	Set if any errors have been encountered during the verify operation
	MGSTAT0	Set if any non-correctable errors have been encountered during the verify operation

29.4.6.10 Unsecure Flash Command

The Unsecure Flash command will erase the entire P-Flash and EEPROM memory space and, if the erase is successful, will release security.

Table 29-50. Unsecure Flash Command FCCOB Requirements

CCOBIX[2:0]	FCCOB Parameters	
000	0x0B	Not required

Upon clearing CCIF to launch the Unsecure Flash command, the Memory Controller will erase the entire P-Flash and EEPROM memory space and verify that it is erased. If the Memory Controller verifies that the entire Flash memory space was properly erased, security will be released. If the erase verify is not successful, the Unsecure Flash operation sets MGSTAT1 and terminates without changing the security state. During the execution of this command (CCIF=0) the user must not write to any Flash module register. The CCIF flag is set after the Unsecure Flash operation has completed.

Table 29-51. Unsecure Flash Command Error Handling

Register	Error Bit	Error Condition
FSTAT	ACCERR	Set if CCOBIX[2:0] != 000 at command launch
		Set if command not available in current mode (see Table 29-27)
	FPVIOL	Set if any area of the P-Flash or EEPROM memory is protected
	MGSTAT1	Set if any errors have been encountered during the verify operation
	MGSTAT0	Set if any non-correctable errors have been encountered during the verify operation

29.4.6.11 Verify Backdoor Access Key Command

The Verify Backdoor Access Key command will only execute if it is enabled by the KEYEN bits in the FSEC register (see Table 29-10). The Verify Backdoor Access Key command releases security if user-supplied keys match those stored in the Flash security bytes of the Flash configuration field (see

Table 29-4). The Verify Backdoor Access Key command must not be executed from the Flash block containing the backdoor comparison key to avoid code runaway.

Table 29-52. Verify Backdoor Access Key Command FCCOB Requirements

CCOBIX[2:0]	FCCOB Parameters	
000	0x0C	Not required
001	Key 0	
010	Key 1	
011	Key 2	
100	Key 3	

Upon clearing CCIF to launch the Verify Backdoor Access Key command, the Memory Controller will check the FSEC KEYEN bits to verify that this command is enabled. If not enabled, the Memory Controller sets the ACCERR bit in the FSTAT register and terminates. If the command is enabled, the Memory Controller compares the key provided in FCCOB to the backdoor comparison key in the Flash configuration field with Key 0 compared to 0x3_FF00, etc. If the backdoor keys match, security will be released. If the backdoor keys do not match, security is not released and all future attempts to execute the Verify Backdoor Access Key command are aborted (set ACCERR) until a reset occurs. The CCIF flag is set after the Verify Backdoor Access Key operation has completed.

Table 29-53. Verify Backdoor Access Key Command Error Handling

Register	Error Bit	Error Condition
FSTAT	ACCERR	Set if CCOBIX[2:0] != 100 at command launch
		Set if an incorrect backdoor key is supplied
		Set if backdoor key access has not been enabled (KEYEN[1:0] != 10, see Section 29.3.2.2)
		Set if the backdoor key has mismatched since the last reset
	FPVIOL	None
	MGSTAT1	None
	MGSTAT0	None

29.4.6.12 Set User Margin Level Command

The Set User Margin Level command causes the Memory Controller to set the margin level for future read operations of the P-Flash or EEPROM block.

Table 29-54. Set User Margin Level Command FCCOB Requirements

CCOBIX[2:0]	FCCOB Parameters	
000	0x0D	Flash block selection code [1:0]. See Table 29-34
001	Margin level setting.	

Upon clearing CCIF to launch the Set User Margin Level command, the Memory Controller will set the user margin level for the targeted block and then set the CCIF flag.

NOTE

When the EEPROM block is targeted, the EEPROM user margin levels are applied only to the EEPROM reads. However, when the P-Flash block is targeted, the P-Flash user margin levels are applied to both P-Flash and EEPROM reads. It is not possible to apply user margin levels to the P-Flash block only.

Valid margin level settings for the Set User Margin Level command are defined in Table 29-55.

Table 29-55. Valid Set User Margin Level Settings

CCOB (CCOBIX=001)	Level Description
0x0000	Return to Normal Level
0x0001	User Margin-1 Level[1]
0x0002	User Margin-0 Level[2]

[1] Read margin to the erased state

[2] Read margin to the programmed state

Table 29-56. Set User Margin Level Command Error Handling

Register	Error Bit	Error Condition
FSTAT	ACCERR	Set if CCOBIX[2:0] != 001 at command launch
		Set if command not available in current mode (see Table 29-27)
		Set if an invalid FlashBlockSelectionCode[1:0] is supplied (See Table 29-34)
		Set if an invalid margin level setting is supplied
	FPVIOL	None
	MGSTAT1	None
	MGSTAT0	None

NOTE

User margin levels can be used to check that Flash memory contents have adequate margin for normal level read operations. If unexpected results are encountered when checking Flash memory contents at user margin levels, a potential loss of information has been detected.

29.4.6.13 Set Field Margin Level Command

The Set Field Margin Level command, valid in special modes only, causes the Memory Controller to set the margin level specified for future read operations of the P-Flash or EEPROM block.

Upon clearing CCIF to launch the Set Field Margin Level command, the Memory Controller will set the field margin level for the targeted block and then set the CCIF flag.

Table 29-57. Set Field Margin Level Command FCCOB Requirements

CCOBIX[2:0]	FCCOB Parameters	
000	0x0E	Flash block selection code [1:0]. See Table 29-34
001	Margin level setting.	

NOTE

When the EEPROM block is targeted, the EEPROM field margin levels are applied only to the EEPROM reads. However, when the P-Flash block is targeted, the P-Flash field margin levels are applied to both P-Flash and EEPROM reads. It is not possible to apply field margin levels to the P-Flash block only.

Valid margin level settings for the Set Field Margin Level command are defined in Table 29-58.

Table 29-58. Valid Set Field Margin Level Settings

CCOB (CCOBIX=001)	Level Description
0x0000	Return to Normal Level
0x0001	User Margin-1 Level[1]
0x0002	User Margin-0 Level[2]
0x0003	Field Margin-1 Level[1]
0x0004	Field Margin-0 Level[2]

1 Read margin to the erased state

2 Read margin to the programmed state

Table 29-59. Set Field Margin Level Command Error Handling

Register	Error Bit	Error Condition
FSTAT	ACCERR	Set if CCOBIX[2:0] != 001 at command launch
		Set if command not available in current mode (see Table 29-27)
		Set if an invalid FlashBlockSelectionCode[1:0] is supplied (See Table 29-34)
		Set if an invalid margin level setting is supplied
	FPVIOL	None
	MGSTAT1	None
	MGSTAT0	None

CAUTION

Field margin levels must only be used during verify of the initial factory programming.

NOTE

Field margin levels can be used to check that Flash memory contents have adequate margin for data retention at the normal level setting. If unexpected results are encountered when checking Flash memory contents at field margin levels, the Flash memory contents should be erased and reprogrammed.

29.4.6.14 Erase Verify EEPROM Section Command

The Erase Verify EEPROM Section command will verify that a section of code in the EEPROM is erased. The Erase Verify EEPROM Section command defines the starting point of the data to be verified and the number of words.

Table 29-60. Erase Verify EEPROM Section Command FCCOB Requirements

CCOBIX[2:0]	FCCOB Parameters	
000	0x10	Global address [17:16] to identify the EEPROM block
001	Global address [15:0] of the first word to be verified	
010	Number of words to be verified	

Upon clearing CCIF to launch the Erase Verify EEPROM Section command, the Memory Controller will verify the selected section of EEPROM memory is erased. The CCIF flag will set after the Erase Verify EEPROM Section operation has completed. If the section is not erased, it means blank check failed, both MGSTAT bits will be set.

Table 29-61. Erase Verify EEPROM Section Command Error Handling

Register	Error Bit	Error Condition
FSTAT	ACCERR	Set if CCOBIX[2:0] != 010 at command launch
		Set if command not available in current mode (see Table 29-27)
		Set if an invalid global address [17:0] is supplied
		Set if a misaligned word address is supplied (global address [0] != 0)
		Set if the requested section breaches the end of the EEPROM block
	FPVIOL	None
	MGSTAT1	Set if any errors have been encountered during the read or if blank check failed.
	MGSTAT0	Set if any non-correctable errors have been encountered during the read or if blank check failed.

29.4.6.15 Program EEPROM Command

The Program EEPROM operation programs one to four previously erased words in the EEPROM block. The Program EEPROM operation will confirm that the targeted location(s) were successfully programmed upon completion.

CAUTION

A Flash word must be in the erased state before being programmed. Cumulative programming of bits within a Flash word is not allowed.

Table 29-62. Program EEPROM Command FCCOB Requirements

CCOBIX[2:0]	FCCOB Parameters	
000	0x11	Global address [17:16] to identify the EEPROM block
001	Global address [15:0] of word to be programmed	
010	Word 0 program value	
011	Word 1 program value, if desired	
100	Word 2 program value, if desired	
101	Word 3 program value, if desired	

Upon clearing CCIF to launch the Program EEPROM command, the user-supplied words will be transferred to the Memory Controller and be programmed if the area is unprotected. The CCOBIX index value at Program EEPROM command launch determines how many words will be programmed in the EEPROM block. The CCIF flag is set when the operation has completed.

Table 29-63. Program EEPROM Command Error Handling

Register	Error Bit	Error Condition
FSTAT	ACCERR	Set if CCOBIX[2:0] < 010 at command launch
		Set if CCOBIX[2:0] > 101 at command launch
		Set if command not available in current mode (see Table 29-27)
		Set if an invalid global address [17:0] is supplied
		Set if a misaligned word address is supplied (global address [0] != 0)
		Set if the requested group of words breaches the end of the EEPROM block
	FPVIOL	Set if the selected area of the EEPROM memory is protected
	MGSTAT1	Set if any errors have been encountered during the verify operation
	MGSTAT0	Set if any non-correctable errors have been encountered during the verify operation

29.4.6.16 Erase EEPROM Sector Command

The Erase EEPROM Sector operation will erase all addresses in a sector of the EEPROM block.

Table 29-64. Erase EEPROM Sector Command FCCOB Requirements

CCOBIX[2:0]	FCCOB Parameters	
000	0x12	Global address [17:16] to identify EEPROM block
001	Global address [15:0] anywhere within the sector to be erased. See Section 29.1.2.2 for EEPROM sector size.	

Upon clearing CCIF to launch the Erase EEPROM Sector command, the Memory Controller will erase the selected Flash sector and verify that it is erased. The CCIF flag will set after the Erase EEPROM Sector operation has completed.

Table 29-65. Erase EEPROM Sector Command Error Handling

Register	Error Bit	Error Condition
FSTAT	ACCERR	Set if CCOBIX[2:0] != 001 at command launch
		Set if command not available in current mode (see Table 29-27)
		Set if an invalid global address [17:0] is supplied (see Table 29-3)
		Set if a misaligned word address is supplied (global address [0] != 0)
	FPVIOL	Set if the selected area of the EEPROM memory is protected
	MGSTAT1	Set if any errors have been encountered during the verify operation
	MGSTAT0	Set if any non-correctable errors have been encountered during the verify operation

29.4.7 Interrupts

The Flash module can generate an interrupt when a Flash command operation has completed or when a Flash command operation has detected an ECC fault.

Table 29-66. Flash Interrupt Sources

Interrupt Source	Interrupt Flag	Local Enable	Global (CCR) Mask
Flash Command Complete	CCIF (FSTAT register)	CCIE (FCNFG register)	I Bit
ECC Double Bit Fault on Flash Read	DFDIF (FERSTAT register)	DFDIE (FERCNFG register)	I Bit
ECC Single Bit Fault on Flash Read	SFDIF (FERSTAT register)	SFDIE (FERCNFG register)	I Bit

NOTE

Vector addresses and their relative interrupt priority are determined at the MCU level.

29.4.7.1 Description of Flash Interrupt Operation

The Flash module uses the CCIF flag in combination with the CCIE interrupt enable bit to generate the Flash command interrupt request. The Flash module uses the DFDIF and SFDIF flags in combination with the DFDIE and SFDIE interrupt enable bits to generate the Flash error interrupt request. For a detailed description of the register bits involved, refer to Section 29.3.2.5, “Flash Configuration Register (FCNFG)”, Section 29.3.2.6, “Flash Error Configuration Register (FERCNFG)”, Section 29.3.2.7, “Flash Status Register (FSTAT)”, and Section 29.3.2.8, “Flash Error Status Register (FERSTAT)”.

The logic used for generating the Flash module interrupts is shown in Figure 29-27.

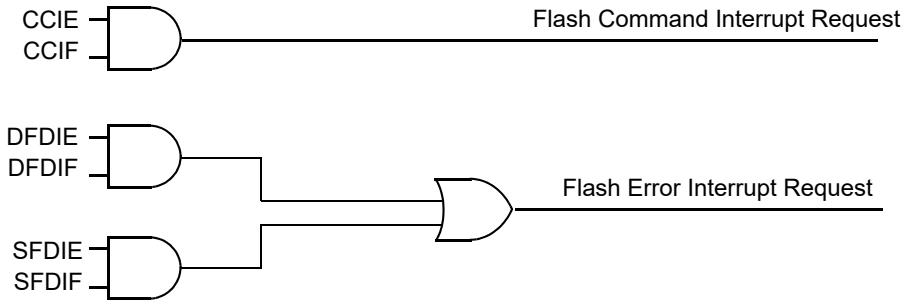

Figure 29-27. Flash Module Interrupts Implementation

29.4.8 Wait Mode

The Flash module is not affected if the MCU enters wait mode. The Flash module can recover the MCU from wait via the CCIF interrupt (see Section 29.4.7, “Interrupts”).

29.4.9 Stop Mode

If a Flash command is active (CCIF = 0) when the MCU requests stop mode, the current Flash operation will be completed before the MCU is allowed to enter stop mode.

29.5 Security

The Flash module provides security information to the MCU. The Flash security state is defined by the SEC bits of the FSEC register (see Table 29-11). During reset, the Flash module initializes the FSEC register using data read from the security byte of the Flash configuration field at global address 0x3_FF0F. The security state out of reset can be permanently changed by programming the security byte assuming that the MCU is starting from a mode where the necessary P-Flash erase and program commands are available and that the upper region of the P-Flash is unprotected. If the Flash security byte is successfully programmed, its new value will take affect after the next MCU reset.

The following subsections describe these security-related subjects:

- Unsecuring the MCU using Backdoor Key Access
- Unsecuring the MCU in Special Single Chip Mode using BDM
- Mode and Security Effects on Flash Command Availability

29.5.1 Unsecuring the MCU using Backdoor Key Access

The MCU may be unsecured by using the backdoor key access feature which requires knowledge of the contents of the backdoor keys (four 16-bit words programmed at addresses 0x3_FF00-0x3_FF07). If the KEYEN[1:0] bits are in the enabled state (see Section 29.3.2.2), the Verify Backdoor Access Key command (see Section 29.4.6.11) allows the user to present four prospective keys for comparison to the keys stored in the Flash memory via the Memory Controller. If the keys presented in the Verify Backdoor Access Key command match the backdoor keys stored in the Flash memory, the SEC bits in the FSEC register (see Table 29-11) will be changed to unsecure the MCU. Key values of 0x0000 and 0xFFFF are not permitted as backdoor keys. While the Verify Backdoor Access Key command is active, P-Flash memory and EEPROM memory will not be available for read access and will return invalid data.

The user code stored in the P-Flash memory must have a method of receiving the backdoor keys from an external stimulus. This external stimulus would typically be through one of the on-chip serial ports.

If the KEYEN[1:0] bits are in the enabled state (see Section 29.3.2.2), the MCU can be unsecured by the backdoor key access sequence described below:

1. Follow the command sequence for the Verify Backdoor Access Key command as explained in Section 29.4.6.11
2. If the Verify Backdoor Access Key command is successful, the MCU is unsecured and the SEC[1:0] bits in the FSEC register are forced to the unsecure state of 10

The Verify Backdoor Access Key command is monitored by the Memory Controller and an illegal key will prohibit future use of the Verify Backdoor Access Key command. A reset of the MCU is the only method to re-enable the Verify Backdoor Access Key command. The security as defined in the Flash security byte (0x3_FF0F) is not changed by using the Verify Backdoor Access Key command sequence. The backdoor keys stored in addresses 0x3_FF00-0x3_FF07 are unaffected by the Verify Backdoor Access Key command sequence. The Verify Backdoor Access Key command sequence has no effect on the program and erase protections defined in the Flash protection register, FPROT.

After the backdoor keys have been correctly matched, the MCU will be unsecured. After the MCU is unsecured, the sector containing the Flash security byte can be erased and the Flash security byte can be reprogrammed to the unsecure state, if desired. In the unsecure state, the user has full control of the contents of the backdoor keys by programming addresses 0x3_FF00-0x3_FF07 in the Flash configuration field.

29.5.2 Unsecuring the MCU in Special Single Chip Mode using BDM

A secured MCU can be unsecured in special single chip mode by using the following method to erase the P-Flash and EEPROM memory:

1. Reset the MCU into special single chip mode
2. Delay while the BDM executes the Erase Verify All Blocks command write sequence to check if the P-Flash and EEPROM memories are erased
3. Send BDM commands to disable protection in the P-Flash and EEPROM memory
4. Execute the Erase All Blocks command write sequence to erase the P-Flash and EEPROM memory. Alternatively the Unsecure Flash command can be executed, if so the steps 5 and 6 below are skeeped.
5. After the CCIF flag sets to indicate that the Erase All Blocks operation has completed, reset the MCU into special single chip mode
6. Delay while the BDM executes the Erase Verify All Blocks command write sequence to verify that the P-Flash and EEPROM memory are erased

If the P-Flash and EEPROM memory are verified as erased, the MCU will be unsecured. All BDM commands will now be enabled and the Flash security byte may be programmed to the unsecure state by continuing with the following steps:

7. Send BDM commands to execute the Program P-Flash command write sequence to program the Flash security byte to the unsecured state

8. Reset the MCU

29.5.3 Mode and Security Effects on Flash Command Availability

The availability of Flash module commands depends on the MCU operating mode and security state as shown in Table 29-27.

29.6 Initialization

On each system reset the flash module executes an initialization sequence which establishes initial values for the Flash Block Configuration Parameters, the FPROT and DFPROT protection registers, and the FOPT and FSEC registers. The initialization routine reverts to built-in default values that leave the module in a fully protected and secured state if errors are encountered during execution of the reset sequence. If a double bit fault is detected during the reset sequence, both MGSTAT bits in the FSTAT register will be set.

CCIF is cleared throughout the initialization sequence. The Flash module holds off all CPU access for a portion of the initialization sequence. Flash reads are allowed once the hold is removed. Completion of the initialization sequence is marked by setting CCIF high which enables user commands.

If a reset occurs while any Flash command is in progress, that command will be immediately aborted. The state of the word being programmed or the sector/block being erased is not guaranteed.

Chapter 30
192 KByte Flash Module (S12FTMRG192K2V1)

Table 30-1. Revision History

Revision Number	Revision Date	Sections Affected	Description of Changes
V01.06	23 Jun 2010	30.4.6.2/30-1107 30.4.6.12/30-1114 30.4.6.13/30-1115	Updated description of the commands RD1BLK, MLOADU and MLOADF
V01.07	20 Aug 2010	30.4.6.2/30-1107 30.4.6.12/30-1114 30.4.6.13/30-1115	Updated description of the commands RD1BLK, MLOADU and MLOADF
V01.08	31 Jan 2011	30.3.2.9/30-1090	Updated description of protection on Section 30.3.2.9

30.1 Introduction

The FTMRG192K2 module implements the following:

- 192Kbytes of P-Flash (Program Flash) memory
- 4Kbytes of EEPROM memory

The Flash memory is ideal for single-supply applications allowing for field reprogramming without requiring external high voltage sources for program or erase operations. The Flash module includes a memory controller that executes commands to modify Flash memory contents. The user interface to the memory controller consists of the indexed Flash Common Command Object (FCCOB) register which is written to with the command, global address, data, and any required command parameters. The memory controller must complete the execution of a command before the FCCOB register can be written to with a new command.

CAUTION

A Flash word or phrase must be in the erased state before being programmed. Cumulative programming of bits within a Flash word or phrase is not allowed.

The Flash memory may be read as bytes and aligned words. Read access time is one bus cycle for bytes and aligned words. For misaligned words access, the CPU has to perform twice the byte read access command. For Flash memory, an erased bit reads 1 and a programmed bit reads 0.

It is possible to read from P-Flash memory while some commands are executing on EEPROM memory. It is not possible to read from EEPROM memory while a command is executing on P-Flash memory. Simultaneous P-Flash and EEPROM operations are discussed in Section 30.4.5.

Both P-Flash and EEPROM memories are implemented with Error Correction Codes (ECC) that can resolve single bit faults and detect double bit faults. For P-Flash memory, the ECC implementation requires that programming be done on an aligned 8 byte basis (a Flash phrase). Since P-Flash memory is always read by half-phrase, only one single bit fault in an aligned 4 byte half-phrase containing the byte or word accessed will be corrected.

30.1.1 Glossary

Command Write Sequence — An MCU instruction sequence to execute built-in algorithms (including program and erase) on the Flash memory.

EEPROM Memory — The EEPROM memory constitutes the nonvolatile memory store for data.

EEPROM Sector — The EEPROM sector is the smallest portion of the EEPROM memory that can be erased. The EEPROM sector consists of 4 bytes.

NVM Command Mode — An NVM mode using the CPU to setup the FCCOB register to pass parameters required for Flash command execution.

Phrase — An aligned group of four 16-bit words within the P-Flash memory. Each phrase includes two sets of aligned double words with each set including 7 ECC bits for single bit fault correction and double bit fault detection within each double word.

P-Flash Memory — The P-Flash memory constitutes the main nonvolatile memory store for applications.

P-Flash Sector — The P-Flash sector is the smallest portion of the P-Flash memory that can be erased. Each P-Flash sector contains 512 bytes.

Program IFR — Nonvolatile information register located in the P-Flash block that contains the Version ID, and the Program Once field.

30.1.2 Features

30.1.2.1 P-Flash Features

- 192 Kbytes of P-Flash memory divided into 384 sectors of 512 bytes
- Single bit fault correction and double bit fault detection within a 32-bit double word during read operations
- Automated program and erase algorithm with verify and generation of ECC parity bits
- Fast sector erase and phrase program operation

- Ability to read the P-Flash memory while programming a word in the EEPROM memory
- Flexible protection scheme to prevent accidental program or erase of P-Flash memory

30.1.2.2 EEPROM Features

- 4Kbytes of EEPROM memory composed of one 4 Kbyte Flash block divided into 1024 sectors of 4 bytes
- Single bit fault correction and double bit fault detection within a word during read operations
- Automated program and erase algorithm with verify and generation of ECC parity bits
- Fast sector erase and word program operation
- Protection scheme to prevent accidental program or erase of EEPROM memory
- Ability to program up to four words in a burst sequence

30.1.2.3 Other Flash Module Features

- No external high-voltage power supply required for Flash memory program and erase operations
- Interrupt generation on Flash command completion and Flash error detection
- Security mechanism to prevent unauthorized access to the Flash memory

30.1.3 Block Diagram

The block diagram of the Flash module is shown in Figure 30-1.

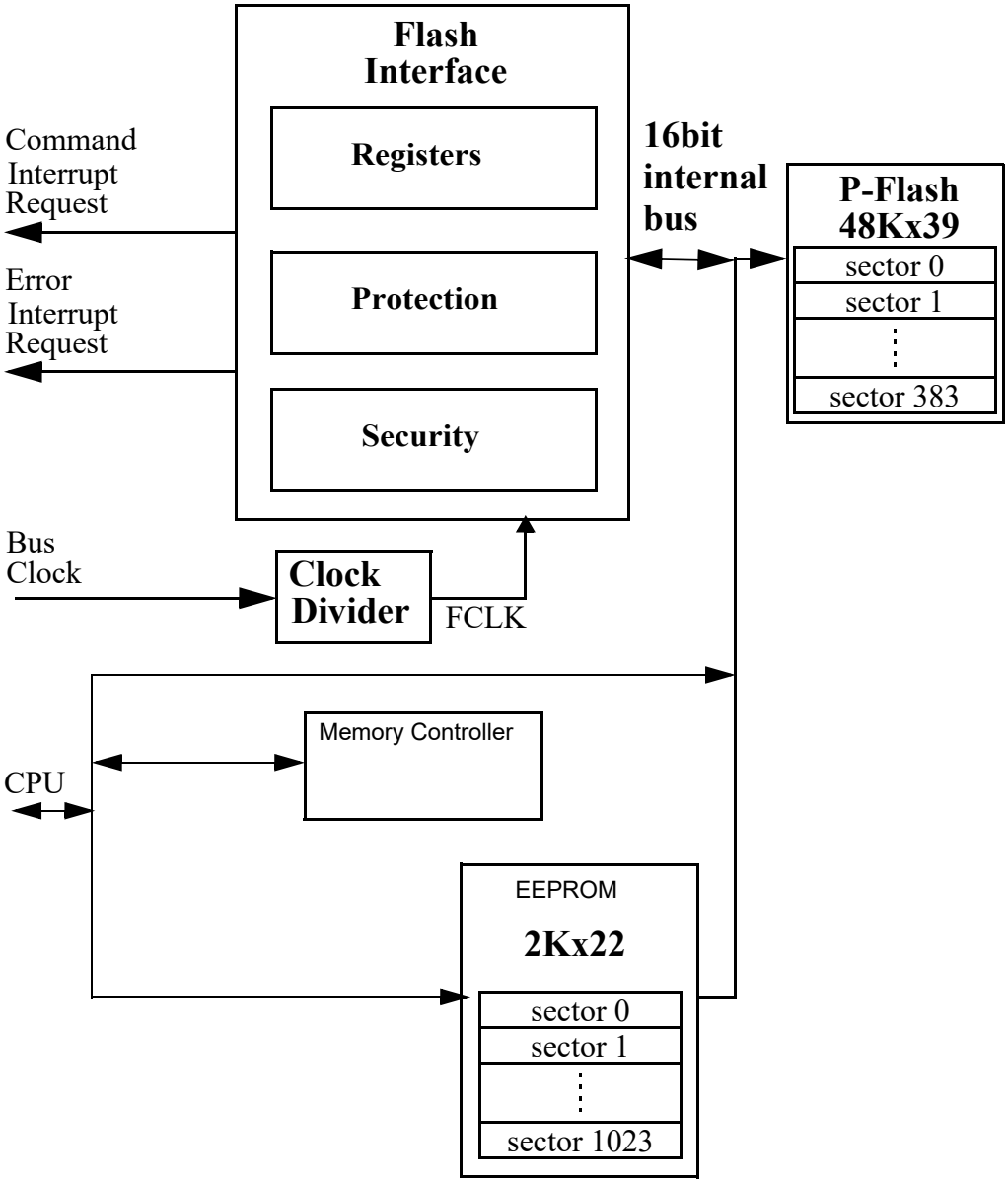

Figure 30-1. FTMRG192K2 Block Diagram

30.2 External Signal Description

The Flash module contains no signals that connect off-chip.

30.3 Memory Map and Registers

This section describes the memory map and registers for the Flash module. Read data from unimplemented memory space in the Flash module is undefined. Write access to unimplemented or reserved memory space in the Flash module will be ignored by the Flash module.

CAUTION

Writing to the Flash registers while a Flash command is executing (that is indicated when the value of flag CCIF reads as ’0’) is not allowed. If such action is attempted the write operation will not change the register value.

Writing to the Flash registers is allowed when the Flash is not busy executing commands (CCIF = 1) and during initialization right after reset, despite the value of flag CCIF in that case (refer to Section 30.6 for a complete description of the reset sequence).

.

Table 30-2. FTMRG Memory Map

Global Address (in Bytes)	Size (Bytes)	Description
0x0_0000 - 0x0_03FF	1,024	Register Space
0x0_0400 – 0x0_13FF	4,096	EEPROM Memory
0x0_4000 – 0x0_7FFF	16,284	NVMRES[1]=1 : NVM Resource area (see Figure 30-3)
0x0_4000 – 0x0_FFFF	49,152	FTMRG reserved area
0x1_0000 – 0x3_FFFF	196,608	P-Flash Memory

[1] See NVMRES description in Section 30.4.3

30.3.1 Module Memory Map

The S12 architecture places the P-Flash memory between global addresses 0x1_0000 and 0x3_FFFF as shown in Table 30-3 .The P-Flash memory map is shown in Figure 30-2.

Table 30-3. P-Flash Memory Addressing

Global Address	Size (Bytes)	Description
0x1_0000 – 0x3_FFFF	192 K	P-Flash Block Contains Flash Configuration Field (see Table 30-4).

The FPROT register, described in Section 30.3.2.9, can be set to protect regions in the Flash memory from accidental program or erase. The Flash memory addresses covered by these protectable regions are shown in the P-Flash memory map. The higher address region is mainly targeted to hold the boot loader code since it covers the vector space. Default protection settings as well as security information that allows the MCU to restrict access to the Flash module are stored in the Flash configuration field as described in Table 30-4.

Table 30-4. Flash Configuration Field

Global Address	Size (Bytes)	Description
0x3_FF00-0x3_FF07	8	Backdoor Comparison Key Refer to Section 30.4.6.11, “Verify Backdoor Access Key Command,” and Section 30.5.1, “Unsecuring the MCU using Backdoor Key Access”
0x3_FF08-0x3_FF0B[1]	4	Reserved
0x3_FF0C[1]	1	P-Flash Protection byte. Refer to Section 30.3.2.9, “P-Flash Protection Register (FPROT)”
0x3_FF0D[1]	1	EEPROM Protection byte. Refer to Section 30.3.2.10, “EEPROM Protection Register (EEPROT)”
0x3_FF0E[1]	1	Flash Nonvolatile byte Refer to Section 30.3.2.16, “Flash Option Register (FOPT)”
0x3_FF0F[1]	1	Flash Security byte Refer to Section 30.3.2.2, “Flash Security Register (FSEC)”

[1] 0x3FF08-0x3_FF0F form a Flash phrase and must be programmed in a single command write sequence. Each byte in the 0x3_FF08 - 0x3_FF0B reserved field should be programmed to 0xFF.

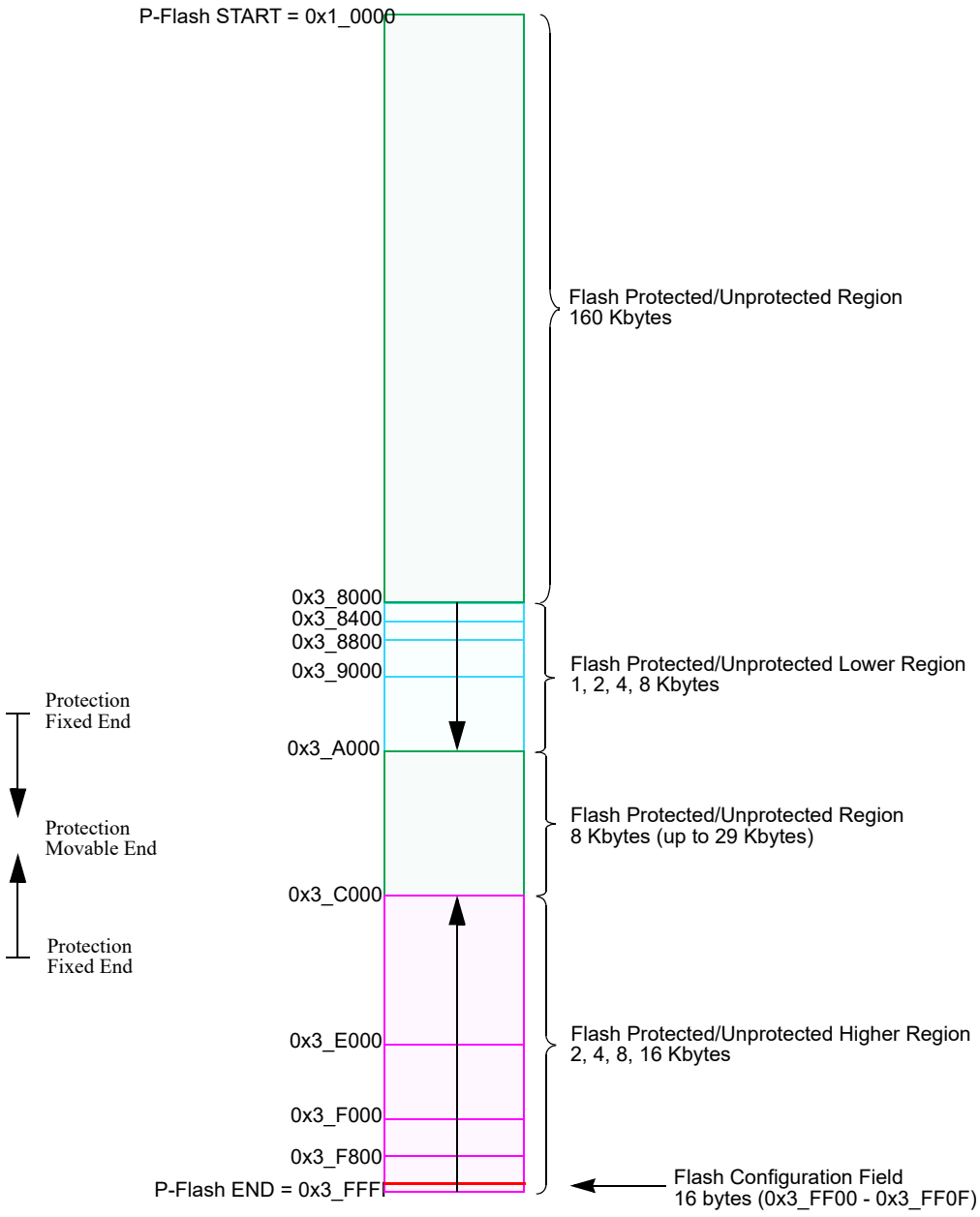

Figure 30-2. P-Flash Memory Map

Table 30-5. Program IFR Fields

Global Address	Size (Bytes)	Field Description
0x0_4000 – 0x0_4007	8	Reserved
0x0_4008 – 0x0_40B5	174	Reserved
0x0_40B6 – 0x0_40B7	2	Version ID[1]

Table 30-5. Program IFR Fields

Global Address	Size (Bytes)	Field Description
0x0_40B8 – 0x0_40BF	8	Reserved
0x0_40C0 – 0x0_40FF	64	Program Once Field Refer to Section 30.4.6.6, “Program Once Command”

1 Used to track firmware patch versions, see Section 30.4.2

Table 30-6. Memory Controller Resource Fields (NVMRES[1]=1)

Global Address	Size (Bytes)	Description
0x0_4000 – 0x040FF	256	P-Flash IFR (see Table 30-5)
0x0_4100 – 0x0_41FF	256	Reserved.
0x0_4200 – 0x0_57FF		Reserved
0x0_5800 – 0x0_5AFF	768	Reserved
0x0_5B00 – 0x0_5FFF	1,280	Reserved
0x0_6000 – 0x0_67FF	2,048	Reserved
0x0_6800 – 0x0_7FFF	6,144	Reserved

1 NVMRES - See Section 30.4.3 for NVMRES (NVM Resource) detail.

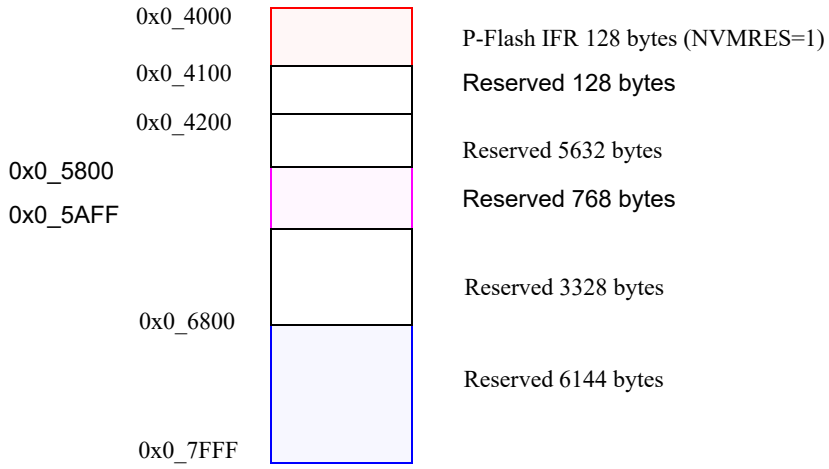

Figure 30-3. Memory Controller Resource Memory Map (NVMRES=1)

30.3.2 Register Descriptions

The Flash module contains a set of 20 control and status registers located between Flash module base + 0x0000 and 0x0013.

In the case of the writable registers, the write accesses are forbidden during Fash command execution (for more detail, see Caution note in Section 30.3).

A summary of the Flash module registers is given in Figure 30-4 with detailed descriptions in the following subsections.

Address & Name		7	6	5	4	3	2	1	0
0x0000 FCLKDIV	R	FDIVLD	FDIVLCK	FDIV5	FDIV4	FDIV3	FDIV2	FDIV1	FDIV0
	W								
0x0001 FSEC	R	KEYEN1	KEYEN0	RNV5	RNV4	RNV3	RNV2	SEC1	SEC0
	W								
0x0002 FCCOBIX	R	0	0	0	0	0	CCOBIX2	CCOBIX1	CCOBIX0
	W								
0x0003 FRSV0	R	0	0	0	0	0	0	0	0
	W								
0x0004 FCNFG	R	CCIE	0	0	IGNSF	0	0	FDFD	FSFD
	W								
0x0005 FERCNFG	R	0	0	0	0	0	0	DFDIE	SFDIE
	W								
0x0006 FSTAT	R	CCIF	0	ACCERR	FPVIOL	MGBUSY	RSVD	MGSTAT1	MGSTAT0
	W								
0x0007 FERSTAT	R	0	0	0	0	0	0	DFDIF	SFDIF
	W								
0x0008 FPROT	R	FPOPEN	RNV6	FPHDIS	FPHS1	FPHS0	FPLDIS	FPLS1	FPLS0
	W								
0x0009 EEPROT	R	DPOPEN	DPS6	DPS5	DPS4	DPS3	DPS2	DPS1	DPS0
	W								

Figure 30-4. FTMRG192K2 Register Summary

Address & Name		7	6	5	4	3	2	1	0
0x000A FCCOBHI	R	CCOB15	CCOB14	CCOB13	CCOB12	CCOB11	CCOB10	CCOB9	CCOB8
	W								
0x000B FCCOBLO	R	CCOB7	CCOB6	CCOB5	CCOB4	CCOB3	CCOB2	CCOB1	CCOB0
	W								
0x000C FRSV1	R	0	0	0	0	0	0	0	0
	W								
0x000D FRSV2	R	0	0	0	0	0	0	0	0
	W								
0x000E FRSV3	R	0	0	0	0	0	0	0	0
	W								
0x000F FRSV4	R	0	0	0	0	0	0	0	0
	W								
0x0010 FOPT	R	NV7	NV6	NV5	NV4	NV3	NV2	NV1	NV0
	W								
0x0011 FRSV5	R	0	0	0	0	0	0	0	0
	W								
0x0012 FRSV6	R	0	0	0	0	0	0	0	0
	W								
0x0013 FRSV7	R	0	0	0	0	0	0	0	0
	W								

= Unimplemented or Reserved

Figure 30-4. FTMRG192K2 Register Summary (continued)

30.3.2.1 Flash Clock Divider Register (FCLKDIV)

The FCLKDIV register is used to control timed events in program and erase algorithms.

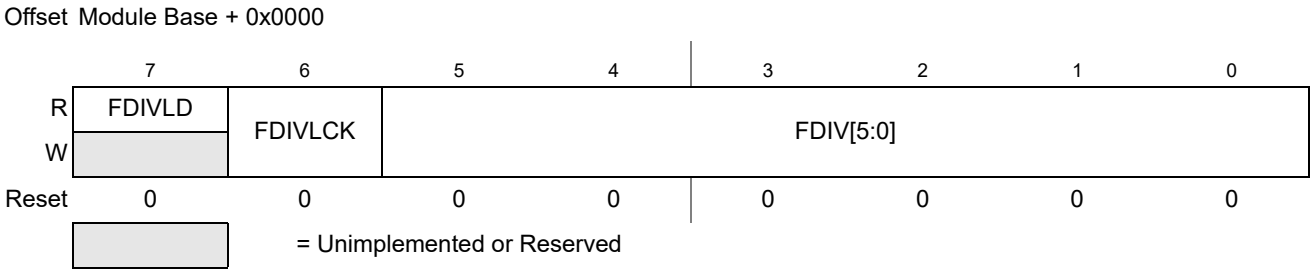

Figure 30-5. Flash Clock Divider Register (FCLKDIV)

All bits in the FCLKDIV register are readable, bit 7 is not writable, bit 6 is write-once-hi and controls the writability of the FDIV field in normal mode. In special mode, bits 6-0 are writable any number of times but bit 7 remains unwritable.

CAUTION

The FCLKDIV register should never be written while a Flash command is executing (CCIF=0).

Table 30-7. FCLKDIV Field Descriptions

Field	Description
7 FDIVLD	Clock Divider Loaded 0 FCLKDIV register has not been written since the last reset 1 FCLKDIV register has been written since the last reset
6 FDIVLCK	Clock Divider Locked 0 FDIV field is open for writing 1 FDIV value is locked and cannot be changed. Once the lock bit is set high, only reset can clear this bit and restore writability to the FDIV field in normal mode.
5–0 FDIV[5:0]	**Clock Divider Bits** — FDIV[5:0] must be set to effectively divide BUSCLK down to 1 MHz to control timed events during Flash program and erase algorithms. Table 30-8 shows recommended values for FDIV[5:0] based on the BUSCLK frequency. Please refer to Section 30.4.4, “Flash Command Operations,” for more information.

Table 30-8. FDIV values for various BUSCLK Frequencies

BUSCLK Frequency (MHz)		FDIV[5:0]	BUSCLK Frequency (MHz)		FDIV[5:0]
MIN[1]	MAX[2]		MIN[1]	MAX[2]	
1.0	1.6	0x00	16.6	17.6	0x10
1.6	2.6	0x01	17.6	18.6	0x11
2.6	3.6	0x02	18.6	19.6	0x12
3.6	4.6	0x03	19.6	20.6	0x13
4.6	5.6	0x04	20.6	21.6	0x14
5.6	6.6	0x05	21.6	22.6	0x15
6.6	7.6	0x06	22.6	23.6	0x16
7.6	8.6	0x07	23.6	24.6	0x17
8.6	9.6	0x08	24.6	25.6	0x18
9.6	10.6	0x09			
10.6	11.6	0x0A			
11.6	12.6	0x0B			
12.6	13.6	0x0C			
13.6	14.6	0x0D			
14.6	15.6	0x0E			
15.6	16.6	0x0F			

1 BUSCLK is Greater Than this value.

2 BUSCLK is Less Than or Equal to this value.

30.3.2.2 Flash Security Register (FSEC)

The FSEC register holds all bits associated with the security of the MCU and Flash module.

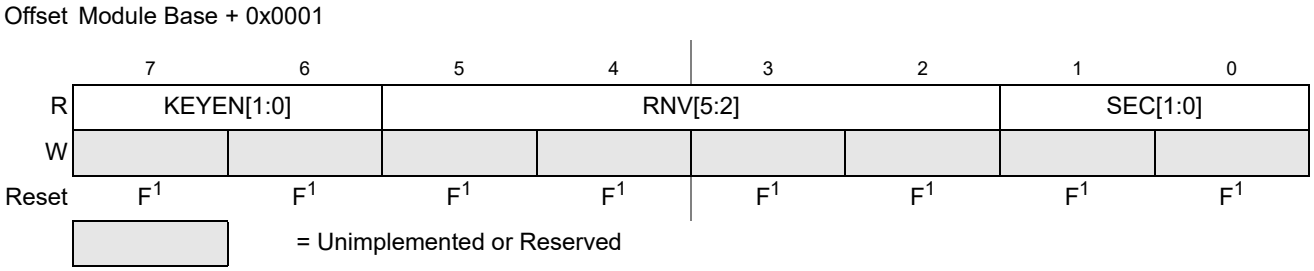

Figure 30-6. Flash Security Register (FSEC)

1 Loaded from IFR Flash configuration field, during reset sequence.

All bits in the FSEC register are readable but not writable.

During the reset sequence, the FSEC register is loaded with the contents of the Flash security byte in the Flash configuration field at global address 0x3_FF0F located in P-Flash memory (see Table 30-4) as

indicated by reset condition F in Figure 30-6. If a double bit fault is detected while reading the P-Flash phrase containing the Flash security byte during the reset sequence, all bits in the FSEC register will be set to leave the Flash module in a secured state with backdoor key access disabled.

Table 30-9. FSEC Field Descriptions

Field	Description
7–6 KEYEN[1:0]	**Backdoor Key Security Enable Bits** — The KEYEN[1:0] bits define the enabling of backdoor key access to the Flash module as shown in Table 30-10.
5–2 RNV[5:2]	**Reserved Nonvolatile Bits** — The RNV bits should remain in the erased state for future enhancements.
1–0 SEC[1:0]	**Flash Security Bits** — The SEC[1:0] bits define the security state of the MCU as shown in Table 30-11. If the Flash module is unsecured using backdoor key access, the SEC bits are forced to 10.

Table 30-10. Flash KEYEN States

KEYEN[1:0]	Status of Backdoor Key Access
00	DISABLED
01	DISABLED[1]
10	ENABLED
11	DISABLED

1 Preferred KEYEN state to disable backdoor key access.

Table 30-11. Flash Security States

SEC[1:0]	Status of Security
00	SECURED
01	SECURED[1]
10	UNSECURED
11	SECURED

1 Preferred SEC state to set MCU to secured state.

The security function in the Flash module is described in Section 30.5.

30.3.2.3 Flash CCOB Index Register (FCCOBIX)

The FCCOBIX register is used to index the FCCOB register for Flash memory operations.

Offset Module Base + 0x0002

	7	6	5	4	3	2	1	0
R	0	0	0	0	0	CCOBIX[2:0]		
W								
Reset	0	0	0	0	0	0	0	0

= Unimplemented or Reserved

Figure 30-7. FCCOB Index Register (FCCOBIX)

CCOBIX bits are readable and writable while remaining bits read 0 and are not writable.

Table 30-12. FCCOBIX Field Descriptions

Field	Description
2–0 CCOBIX[1:0]	**Common Command Register Index**— The CCOBIX bits are used to select which word of the FCCOB register array is being read or written to. See 30.3.2.11 Flash Common Command Object Register (FCCOB)," for more details.

30.3.2.4 Flash Reserved0 Register (FRSV0)

This Flash register is reserved for factory testing.

Offset Module Base + 0x000C

	7	6	5	4	3	2	1	0
R	0	0	0	0	0	0	0	0
W								
Reset	0	0	0	0	0	0	0	0

= Unimplemented or Reserved

Figure 30-8. Flash Reserved0 Register (FRSV0)

All bits in the FRSV0 register read 0 and are not writable.

30.3.2.5 Flash Configuration Register (FCNFG)

The FCNFG register enables the Flash command complete interrupt and forces ECC faults on Flash array read access from the CPU.

Offset Module Base + 0x0004

	7	6	5	4	3	2	1	0
R	CCIE	0	0	IGNSF	0	0	FDFD	FSFD
W								
Reset	0	0	0	0	0	0	0	0

= Unimplemented or Reserved

Figure 30-9. Flash Configuration Register (FCNFG)

CCIE, IGNSF, FDFD, and FSFD bits are readable and writable while remaining bits read 0 and are not writable.

Table 30-13. FCNFG Field Descriptions

Field	Description
7 CCIE	**Command Complete Interrupt Enable** — The CCIE bit controls interrupt generation when a Flash command has completed. 0 Command complete interrupt disabled 1 An interrupt will be requested whenever the CCIF flag in the FSTAT register is set (see Section 30.3.2.7)
4 IGNSF	**Ignore Single Bit Fault** — The IGNSF controls single bit fault reporting in the FERSTAT register (see Section 30.3.2.8). 0 All single bit faults detected during array reads are reported 1 Single bit faults detected during array reads are not reported and the single bit fault interrupt will not be generated
1 FDFD	**Force Double Bit Fault Detect** — The FDFD bit allows the user to simulate a double bit fault during Flash array read operations and check the associated interrupt routine. The FDFD bit is cleared by writing a 0 to FDFD. 0 Flash array read operations will set the DFDIF flag in the FERSTAT register only if a double bit fault is detected 1 Any Flash array read operation will force the DFDIF flag in the FERSTAT register to be set (see Section 30.3.2.7) and an interrupt will be generated as long as the DFDIE interrupt enable in the FERCNFG register is set (see Section 30.3.2.6)
0 FSFD	**Force Single Bit Fault Detect** — The FSFD bit allows the user to simulate a single bit fault during Flash array read operations and check the associated interrupt routine. The FSFD bit is cleared by writing a 0 to FSFD. 0 Flash array read operations will set the SFDIF flag in the FERSTAT register only if a single bit fault is detected 1 Flash array read operation will force the SFDIF flag in the FERSTAT register to be set (see Section 30.3.2.7) and an interrupt will be generated as long as the SFDIE interrupt enable in the FERCNFG register is set (see Section 30.3.2.6)

30.3.2.6 Flash Error Configuration Register (FERCNFG)

The FERCNFG register enables the Flash error interrupts for the FERSTAT flags.

Offset Module Base + 0x0005

	7	6	5	4	3	2	1	0
R	0	0	0	0	0	0	DFDIE	SFDIE
W								
Reset	0	0	0	0	0	0	0	0

= Unimplemented or Reserved

Figure 30-10. Flash Error Configuration Register (FERCNFG)

All assigned bits in the FERCNFG register are readable and writable.

Table 30-14. FERCNFG Field Descriptions

Field	Description
1 DFDIE	**Double Bit Fault Detect Interrupt Enable** — The DFDIE bit controls interrupt generation when a double bit fault is detected during a Flash block read operation. 0 DFDIF interrupt disabled 1 An interrupt will be requested whenever the DFDIF flag is set (see Section 30.3.2.8)
0 SFDIE	**Single Bit Fault Detect Interrupt Enable** — The SFDIE bit controls interrupt generation when a single bit fault is detected during a Flash block read operation. 0 SFDIF interrupt disabled whenever the SFDIF flag is set (see Section 30.3.2.8) 1 An interrupt will be requested whenever the SFDIF flag is set (see Section 30.3.2.8)

30.3.2.7 Flash Status Register (FSTAT)

The FSTAT register reports the operational status of the Flash module.

Offset Module Base + 0x0006

	7	6	5	4	3	2	1	0
R	CCIF	0	ACCERR	FPVIOL	MGBUSY	RSVD	MGSTAT[1:0]	
W								
Reset	1	0	0	0	0	0	0[1]	0[1]

= Unimplemented or Reserved

Figure 30-11. Flash Status Register (FSTAT)

[1] Reset value can deviate from the value shown if a double bit fault is detected during the reset sequence (see Section 30.6).

CCIF, ACCERR, and FPVIOL bits are readable and writable, MGBUSY and MGSTAT bits are readable but not writable, while remaining bits read 0 and are not writable.

Table 30-15. FSTAT Field Descriptions

Field	Description
7 CCIF	**Command Complete Interrupt Flag** — The CCIF flag indicates that a Flash command has completed. The CCIF flag is cleared by writing a 1 to CCIF to launch a command and CCIF will stay low until command completion or command violation. 0 Flash command in progress 1 Flash command has completed
5 ACCERR	**Flash Access Error Flag** — The ACCERR bit indicates an illegal access has occurred to the Flash memory caused by either a violation of the command write sequence (see Section 30.4.4.2) or issuing an illegal Flash command. While ACCERR is set, the CCIF flag cannot be cleared to launch a command. The ACCERR bit is cleared by writing a 1 to ACCERR. Writing a 0 to the ACCERR bit has no effect on ACCERR. 0 No access error detected 1 Access error detected
4 FPVIOL	**Flash Protection Violation Flag** —The FPVIOL bit indicates an attempt was made to program or erase an address in a protected area of P-Flash or EEPROM memory during a command write sequence. The FPVIOL bit is cleared by writing a 1 to FPVIOL. Writing a 0 to the FPVIOL bit has no effect on FPVIOL. While FPVIOL is set, it is not possible to launch a command or start a command write sequence. 0 No protection violation detected 1 Protection violation detected

Table 30-15. FSTAT Field Descriptions (continued)

Field	Description
3 MGBUSY	**Memory Controller Busy Flag** — The MGBUSY flag reflects the active state of the Memory Controller. 0 Memory Controller is idle 1 Memory Controller is busy executing a Flash command (CCIF = 0)
2 RSVD	**Reserved Bit** — This bit is reserved and always reads 0.
1–0 MGSTAT[1:0]	**Memory Controller Command Completion Status Flag** — One or more MGSTAT flag bits are set if an error is detected during execution of a Flash command or during the Flash reset sequence. See Section 30.4.6, “Flash Command Description,” and Section 30.6, “Initialization” for details.

30.3.2.8 Flash Error Status Register (FERSTAT)

The FERSTAT register reflects the error status of internal Flash operations.

Offset Module Base + 0x0007

	7	6	5	4	3	2	1	0
R	0	0	0	0	0	0	DFDIF	SFDIF
W								
Reset	0	0	0	0	0	0	0	0

= Unimplemented or Reserved

Figure 30-12. Flash Error Status Register (FERSTAT)

All flags in the FERSTAT register are readable and only writable to clear the flag.

Table 30-16. FERSTAT Field Descriptions

Field	Description
1 DFDIF	**Double Bit Fault Detect Interrupt Flag** — The setting of the DFDIF flag indicates that a double bit fault was detected in the stored parity and data bits during a Flash array read operation or that a Flash array read operation returning invalid data was attempted on a Flash block that was under a Flash command operation.[1] The DFDIF flag is cleared by writing a 1 to DFDIF. Writing a 0 to DFDIF has no effect on DFDIF.[2] 0 No double bit fault detected 1 Double bit fault detected or a Flash array read operation returning invalid data was attempted while command running
0 SFDIF	**Single Bit Fault Detect Interrupt Flag** — With the IGNSF bit in the FCNFG register clear, the SFDIF flag indicates that a single bit fault was detected in the stored parity and data bits during a Flash array read operation or that a Flash array read operation returning invalid data was attempted on a Flash block that was under a Flash command operation.[1] The SFDIF flag is cleared by writing a 1 to SFDIF. Writing a 0 to SFDIF has no effect on SFDIF. 0 No single bit fault detected 1 Single bit fault detected and corrected or a Flash array read operation returning invalid data was attempted while command running

1 The single bit fault and double bit fault flags are mutually exclusive for parity errors (an ECC fault occurrence can be either single fault or double fault but never both). A simultaneous access collision (Flash array read operation returning invalid data attempted while command running) is indicated when both SFDIF and DFDIF flags are high.

2 There is a one cycle delay in storing the ECC DFDIF and SFDIF fault flags in this register. At least one NOP is required after a flash memory read before checking FERSTAT for the occurrence of ECC errors.

30.3.2.9 P-Flash Protection Register (FPROT)

The FPROT register defines which P-Flash sectors are protected against program and erase operations.

Offset Module Base + 0x0008

	7	6	5	4	3	2	1	0
R	FPOPEN	RNV6	FPHDIS	FPHS[1:0]		FPLDIS	FPLS[1:0]	
W								
Reset	F[1]	F[1]	F[1]	F[1]	F[1]	F[1]	F[1]	F[1]

= Unimplemented or Reserved

Figure 30-13. Flash Protection Register (FPROT)

[1] Loaded from IFR Flash configuration field, during reset sequence.

The (unreserved) bits of the FPROT register are writable with the restriction that the size of the protected region can only be increased (see Section 30.3.2.9.1, “P-Flash Protection Restrictions,” and Table 30-21).

During the reset sequence, the FPROT register is loaded with the contents of the P-Flash protection byte in the Flash configuration field at global address 0x3_FF0C located in P-Flash memory (see Table 30-4) as indicated by reset condition ‘F’ in Figure 30-13. To change the P-Flash protection that will be loaded during the reset sequence, the upper sector of the P-Flash memory must be unprotected, then the P-Flash protection byte must be reprogrammed. If a double bit fault is detected while reading the P-Flash phrase containing the P-Flash protection byte during the reset sequence, the FPOPEN bit will be cleared and remaining bits in the FPROT register will be set to leave the P-Flash memory fully protected.

Trying to alter data in any protected area in the P-Flash memory will result in a protection violation error and the FPVIOL bit will be set in the FSTAT register. The block erase of a P-Flash block is not possible if any of the P-Flash sectors contained in the same P-Flash block are protected.

Table 30-17. FPROT Field Descriptions

Field	Description
7 FPOPEN	**Flash Protection Operation Enable** — The FPOPEN bit determines the protection function for program or erase operations as shown in Table 30-18 for the P-Flash block. 0 When FPOPEN is clear, the FPHDIS and FPLDIS bits define unprotected address ranges as specified by the corresponding FPHS and FPLS bits 1 When FPOPEN is set, the FPHDIS and FPLDIS bits enable protection for the address range specified by the corresponding FPHS and FPLS bits
6 RNV[6]	**Reserved Nonvolatile Bit** — The RNV bit should remain in the erased state for future enhancements.
5 FPHDIS	**Flash Protection Higher Address Range Disable** — The FPHDIS bit determines whether there is a protected/unprotected area in a specific region of the P-Flash memory ending with global address 0x3_FFFF. 0 Protection/Unprotection enabled 1 Protection/Unprotection disabled
4–3 FPHS[1:0]	**Flash Protection Higher Address Size** — The FPHS bits determine the size of the protected/unprotected area in P-Flash memory as shown inTable 30-19. The FPHS bits can only be written to while the FPHDIS bit is set.

Table 30-17. FPROT Field Descriptions (continued)

Field	Description
2 FPLDIS	**Flash Protection Lower Address Range Disable** — The FPLDIS bit determines whether there is a protected/unprotected area in a specific region of the P-Flash memory beginning with global address 0x3_8000. 0 Protection/Unprotection enabled 1 Protection/Unprotection disabled
1–0 FPLS[1:0]	**Flash Protection Lower Address Size** — The FPLS bits determine the size of the protected/unprotected area in P-Flash memory as shown in Table 30-20. The FPLS bits can only be written to while the FPLDIS bit is set.

Table 30-18. P-Flash Protection Function

FPOPEN	FPHDIS	FPLDIS	Function[1]
1	1	1	No P-Flash Protection
1	1	0	Protected Low Range
1	0	1	Protected High Range
1	0	0	Protected High and Low Ranges
0	1	1	Full P-Flash Memory Protected
0	1	0	Unprotected Low Range
0	0	1	Unprotected High Range
0	0	0	Unprotected High and Low Ranges

1 For range sizes, refer to Table 30-19 and Table 30-20.

Table 30-19. P-Flash Protection Higher Address Range

FPHS[1:0]	Global Address Range	Protected Size
00	0x3_F800–0x3_FFFF	2 Kbytes
01	0x3_F000–0x3_FFFF	4 Kbytes
10	0x3_E000–0x3_FFFF	8 Kbytes
11	0x3_C000–0x3_FFFF	16 Kbytes

Table 30-20. P-Flash Protection Lower Address Range

FPLS[1:0]	Global Address Range	Protected Size
00	0x3_8000–0x3_83FF	1 Kbyte
01	0x3_8000–0x3_87FF	2 Kbytes
10	0x3_8000–0x3_8FFF	4 Kbytes
11	0x3_8000–0x3_9FFF	8 Kbytes

All possible P-Flash protection scenarios are shown in Figure 30-14 . Although the protection scheme is loaded from the Flash memory at global address 0x3_FF0C during the reset sequence, it can be changed by the user. The P-Flash protection scheme can be used by applications requiring reprogramming in single chip mode while providing as much protection as possible if reprogramming is not required.

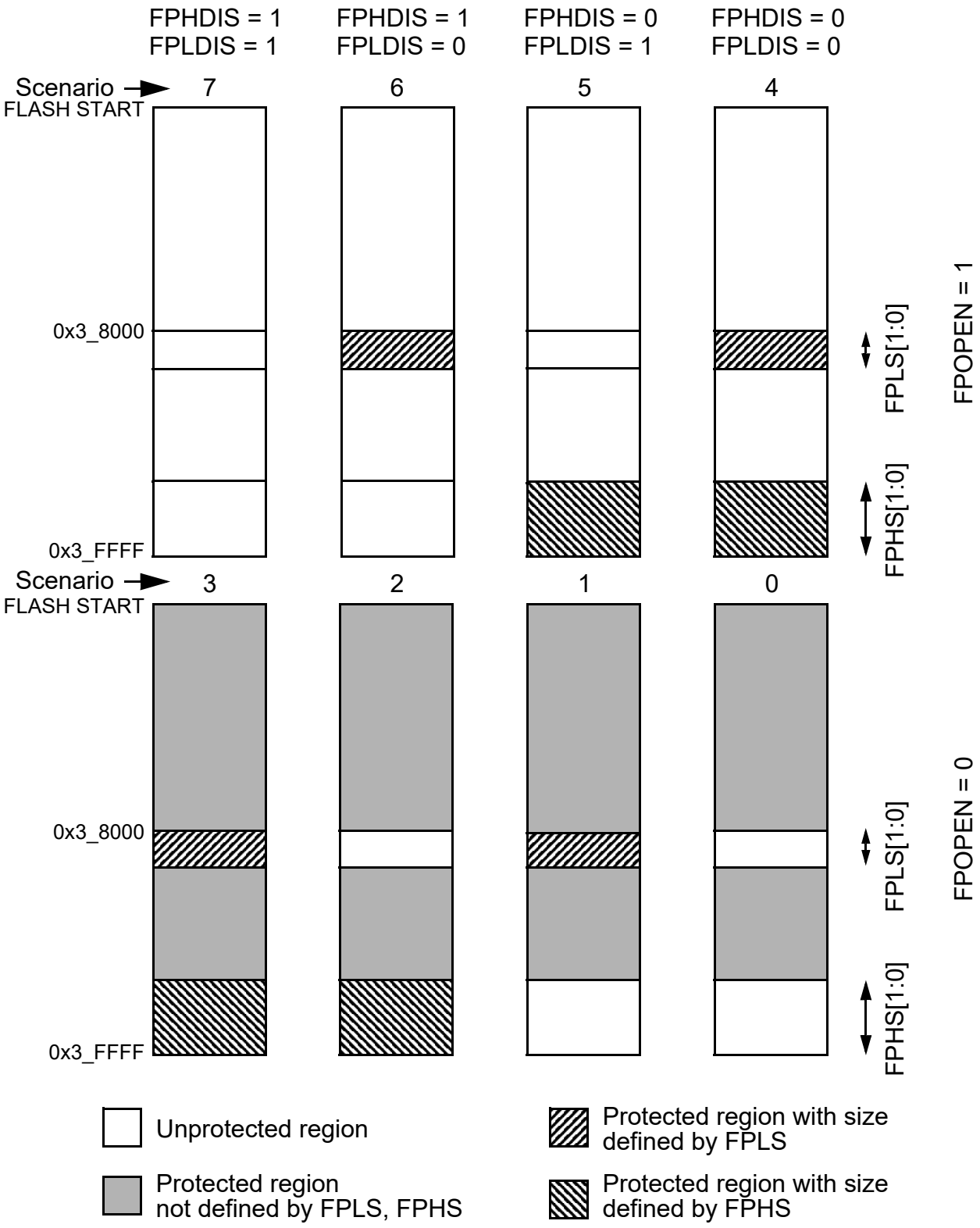

Figure 30-14. P-Flash Protection Scenarios

30.3.2.9.1 P-Flash Protection Restrictions

The general guideline is that P-Flash protection can only be added and not removed. Table 30-21 specifies all valid transitions between P-Flash protection scenarios. Any attempt to write an invalid scenario to the FPROT register will be ignored. The contents of the FPROT register reflect the active protection scenario. See the FPHS and FPLS bit descriptions for additional restrictions.

Table 30-21. P-Flash Protection Scenario Transitions

From Protection Scenario	To Protection Scenario[1]							
	0	1	2	3	4	5	6	7
0	X	X	X	X				
1		X		X				
2			X	X				
3				X				
4				X	X			
5			X	X	X	X		
6		X		X	X		X	
7	X	X	X	X	X	X	X	X

[1] Allowed transitions marked with X, see Figure 30-14 for a definition of the scenarios.

30.3.2.10 EEPROM Protection Register (EEPROT)

The EEPROT register defines which EEPROM sectors are protected against program and erase operations.

Offset Module Base + 0x0009

	7	6	5	4	3	2	1	0
R W	DPOPEN	DPS[6:0]						
Reset	F[1]	F[1]	F[1]	F[1]	F[1]	F[1]	F[1]	F[1]

Figure 30-15. EEPROM Protection Register (EEPROT)

[1] Loaded from IFR Flash configuration field, during reset sequence.

The (unreserved) bits of the EEPROT register are writable with the restriction that protection can be added but not removed. Writes must increase the DPS value and the DPOPEN bit can only be written from 1 (protection disabled) to 0 (protection enabled). If the DPOPEN bit is set, the state of the DPS bits is irrelevant.

During the reset sequence, fields DPOPEN and DPS of the EEPROT register are loaded with the contents of the EEPROM protection byte in the Flash configuration field at global address 0x3_FF0D located in

P-Flash memory (see Table 30-4) as indicated by reset condition F in Table 30-23. To change the EEPROM protection that will be loaded during the reset sequence, the P-Flash sector containing the EEPROM protection byte must be unprotected, then the EEPROM protection byte must be programmed. If a double bit fault is detected while reading the P-Flash phrase containing the EEPROM protection byte during the reset sequence, the DPOPEN bit will be cleared and DPS bits will be set to leave the EEPROM memory fully protected.

Trying to alter data in any protected area in the EEPROM memory will result in a protection violation error and the FPVIOL bit will be set in the FSTAT register. Block erase of the EEPROM memory is not possible if any of the EEPROM sectors are protected.

Table 30-22. EEPROT Field Descriptions

Field	Description
7 DPOPEN	EEPROM Protection Control 0 Enables EEPROM memory protection from program and erase with protected address range defined by DPS bits 1 Disables EEPROM memory protection from program and erase
6–0 DPS[6:0]	**EEPROM Protection Size** — The DPS[6:0] bits determine the size of the protected area in the EEPROM memory, this size increase in step of 32 bytes, as shown in Table 30-23 .

Table 30-23. EEPROM Protection Address Range

DPS[6:0]	Global Address Range	Protected Size
0000000	0x0_0400 – 0x0_041F	32 bytes
0000001	0x0_0400 – 0x0_043F	64 bytes
0000010	0x0_0400 – 0x0_045F	96 bytes
0000011	0x0_0400 – 0x0_047F	128 bytes
0000100	0x0_0400 – 0x0_049F	160 bytes
0000101	0x0_0400 – 0x0_04BF	192 bytes
The Protection Size goes on enlarging in step of 32 bytes, for each DPS value increasing of one. . . .		
1111111	0x0_0400 – 0x0_13FF	4,096 bytes

30.3.2.11 Flash Common Command Object Register (FCCOB)

The FCCOB is an array of six words addressed via the CCOBIX index found in the FCCOBIX register. Byte wide reads and writes are allowed to the FCCOB register.

Offset Module Base + 0x000A

	7	6	5	4	3	2	1	0
R W	CCOB[15:8]							
Reset	0	0	0	0	0	0	0	0

Figure 30-16. Flash Common Command Object High Register (FCCOBHI)

Offset Module Base + 0x000B

	7	6	5	4	3	2	1	0
R W	CCOB[7:0]							
Reset	0	0	0	0	0	0	0	0

Figure 30-17. Flash Common Command Object Low Register (FCCOBLO)

30.3.2.11.1 FCCOB - NVM Command Mode

NVM command mode uses the indexed FCCOB register to provide a command code and its relevant parameters to the Memory Controller. The user first sets up all required FCCOB fields and then initiates the command's execution by writing a 1 to the CCIF bit in the FSTAT register (a 1 written by the user clears the CCIF command completion flag to 0). When the user clears the CCIF bit in the FSTAT register all FCCOB parameter fields are locked and cannot be changed by the user until the command completes (as evidenced by the Memory Controller returning CCIF to 1). Some commands return information to the FCCOB register array.

The generic format for the FCCOB parameter fields in NVM command mode is shown in Table 30-24. The return values are available for reading after the CCIF flag in the FSTAT register has been returned to 1 by the Memory Controller. Writes to the unimplemented parameter fields (CCOBIX = 110 and CCOBIX = 111) are ignored with reads from these fields returning 0x0000.

Table 30-24 shows the generic Flash command format. The high byte of the first word in the CCOB array contains the command code, followed by the parameters for this specific Flash command. For details on the FCCOB settings required by each command, see the Flash command descriptions in Section 30.4.6.

Table 30-24. FCCOB - NVM Command Mode (Typical Usage)

CCOBIX[2:0]	Byte	FCCOB Parameter Fields (NVM Command Mode)
000	HI	FCMD[7:0] defining Flash command
	LO	6'h0, Global address [17:16]
001	HI	Global address [15:8]
	LO	Global address [7:0]

Table 30-24. FCCOB - NVM Command Mode (Typical Usage)

CCOBIX[2:0]	Byte	FCCOB Parameter Fields (NVM Command Mode)
010	HI	Data 0 [15:8]
	LO	Data 0 [7:0]
011	HI	Data 1 [15:8]
	LO	Data 1 [7:0]
100	HI	Data 2 [15:8]
	LO	Data 2 [7:0]
101	HI	Data 3 [15:8]
	LO	Data 3 [7:0]

30.3.2.12 Flash Reserved1 Register (FRSV1)

This Flash register is reserved for factory testing.

Offset Module Base + 0x000C

	7	6	5	4	3	2	1	0
R	0	0	0	0	0	0	0	0
W								
Reset	0	0	0	0	0	0	0	0

= Unimplemented or Reserved

Figure 30-18. Flash Reserved1 Register (FRSV1)

All bits in the FRSV1 register read 0 and are not writable.

30.3.2.13 Flash Reserved2 Register (FRSV2)

This Flash register is reserved for factory testing.

Offset Module Base + 0x000D

	7	6	5	4	3	2	1	0
R	0	0	0	0	0	0	0	0
W								
Reset	0	0	0	0	0	0	0	0

= Unimplemented or Reserved

Figure 30-19. Flash Reserved2 Register (FRSV2)

All bits in the FRSV2 register read 0 and are not writable.

30.3.2.14 Flash Reserved3 Register (FRSV3)

This Flash register is reserved for factory testing.

Offset Module Base + 0x000E

	7	6	5	4	3	2	1	0
R	0	0	0	0	0	0	0	0
W								
Reset	0	0	0	0	0	0	0	0

= Unimplemented or Reserved

Figure 30-20. Flash Reserved3 Register (FRSV3)

All bits in the FRSV3 register read 0 and are not writable.

30.3.2.15 Flash Reserved4 Register (FRSV4)

This Flash register is reserved for factory testing.

Offset Module Base + 0x000F

	7	6	5	4	3	2	1	0
R	0	0	0	0	0	0	0	0
W								
Reset	0	0	0	0	0	0	0	0

= Unimplemented or Reserved

Figure 30-21. Flash Reserved4 Register (FRSV4)

All bits in the FRSV4 register read 0 and are not writable.

30.3.2.16 Flash Option Register (FOPT)

The FOPT register is the Flash option register.

Offset Module Base + 0x0010

	7	6	5	4	3	2	1	0
R	NV[7:0]							
W								
Reset	F[1]	F[1]	F[1]	F[1]	F[1]	F[1]	F[1]	F[1]

= Unimplemented or Reserved

Figure 30-22. Flash Option Register (FOPT)

1 Loaded from IFR Flash configuration field, during reset sequence.

All bits in the FOPT register are readable but are not writable.

During the reset sequence, the FOPT register is loaded from the Flash nonvolatile byte in the Flash configuration field at global address 0x3_FF0E located in P-Flash memory (see Table 30-4) as indicated by reset condition F in Figure 30-22. If a double bit fault is detected while reading the P-Flash phrase containing the Flash nonvolatile byte during the reset sequence, all bits in the FOPT register will be set.

Table 30-25. FOPT Field Descriptions

Field	Description
7–0 NV[7:0]	**Nonvolatile Bits** — The NV[7:0] bits are available as nonvolatile bits. Refer to the device user guide for proper use of the NV bits.

30.3.2.17 Flash Reserved5 Register (FRSV5)

This Flash register is reserved for factory testing.

Offset Module Base + 0x0011

	7	6	5	4	3	2	1	0
R	0	0	0	0	0	0	0	0
W								
Reset	0	0	0	0	0	0	0	0

= Unimplemented or Reserved

Figure 30-23. Flash Reserved5 Register (FRSV5)

All bits in the FRSV5 register read 0 and are not writable.

30.3.2.18 Flash Reserved6 Register (FRSV6)

This Flash register is reserved for factory testing.

Offset Module Base + 0x0012

	7	6	5	4	3	2	1	0
R	0	0	0	0	0	0	0	0
W								
Reset	0	0	0	0	0	0	0	0

= Unimplemented or Reserved

Figure 30-24. Flash Reserved6 Register (FRSV6)

All bits in the FRSV6 register read 0 and are not writable.

30.3.2.19 Flash Reserved7 Register (FRSV7)

This Flash register is reserved for factory testing.

Offset Module Base + 0x0013

	7	6	5	4	3	2	1	0
R	0	0	0	0	0	0	0	0
W								
Reset	0	0	0	0	0	0	0	0

= Unimplemented or Reserved

Figure 30-25. Flash Reserved7 Register (FRSV7)

All bits in the FRSV7 register read 0 and are not writable.

30.4 Functional Description

30.4.1 Modes of Operation

The FTMRG192K2 module provides the modes of operation normal and special . The operating mode is determined by module-level inputs and affects the FCLKDIV, FCNFG, and EEPROT registers (see Table 30-27).

30.4.2 IFR Version ID Word

The version ID word is stored in the IFR at address 0x0_40B6. The contents of the word are defined in Table 30-26.

Table 30-26. IFR Version ID Fields

[15:4]	[3:0]
Reserved	VERNUM

- VERNUM: Version number. The first version is number 0b_0001 with both 0b_0000 and 0b_1111 meaning ‘none’.

30.4.3 Internal NVM resource (NVMRES)

IFR is an internal NVM resource readable by CPU , when NVMRES is active. The IFR fields are shown in Table 30-5.

The NVMRES global address map is shown in Table 30-6.

30.4.4 Flash Command Operations

Flash command operations are used to modify Flash memory contents.

The next sections describe:

- How to write the FCLKDIV register that is used to generate a time base (FCLK) derived from BUSCLK for Flash program and erase command operations
- The command write sequence used to set Flash command parameters and launch execution
- Valid Flash commands available for execution, according to MCU functional mode and MCU security state.

30.4.4.1 Writing the FCLKDIV Register

Prior to issuing any Flash program or erase command after a reset, the user is required to write the FCLKDIV register to divide BUSCLK down to a target FCLK of 1 MHz. Table 30-8 shows recommended values for the FDIV field based on BUSCLK frequency.

NOTE

Programming or erasing the Flash memory cannot be performed if the bus clock runs at less than 0.8 MHz. Setting FDIV too high can destroy the Flash memory due to overstress. Setting FDIV too low can result in incomplete programming or erasure of the Flash memory cells.

When the FCLKDIV register is written, the FDIVLD bit is set automatically. If the FDIVLD bit is 0, the FCLKDIV register has not been written since the last reset. If the FCLKDIV register has not been written, any Flash program or erase command loaded during a command write sequence will not execute and the ACCERR bit in the FSTAT register will set.

30.4.4.2 Command Write Sequence

The Memory Controller will launch all valid Flash commands entered using a command write sequence.

Before launching a command, the ACCERR and FPVIOL bits in the FSTAT register must be clear (see Section 30.3.2.7) and the CCIF flag should be tested to determine the status of the current command write sequence. If CCIF is 0, the previous command write sequence is still active, a new command write sequence cannot be started, and all writes to the FCCOB register are ignored.

30.4.4.2.1 Define FCCOB Contents

The FCCOB parameter fields must be loaded with all required parameters for the Flash command being executed. Access to the FCCOB parameter fields is controlled via the CCOBIX bits in the FCCOBIX register (see Section 30.3.2.3).

The contents of the FCCOB parameter fields are transferred to the Memory Controller when the user clears the CCIF command completion flag in the FSTAT register (writing 1 clears the CCIF to 0). The CCIF flag will remain clear until the Flash command has completed. Upon completion, the Memory Controller will return CCIF to 1 and the FCCOB register will be used to communicate any results. The flow for a generic command write sequence is shown in Figure 30-26.

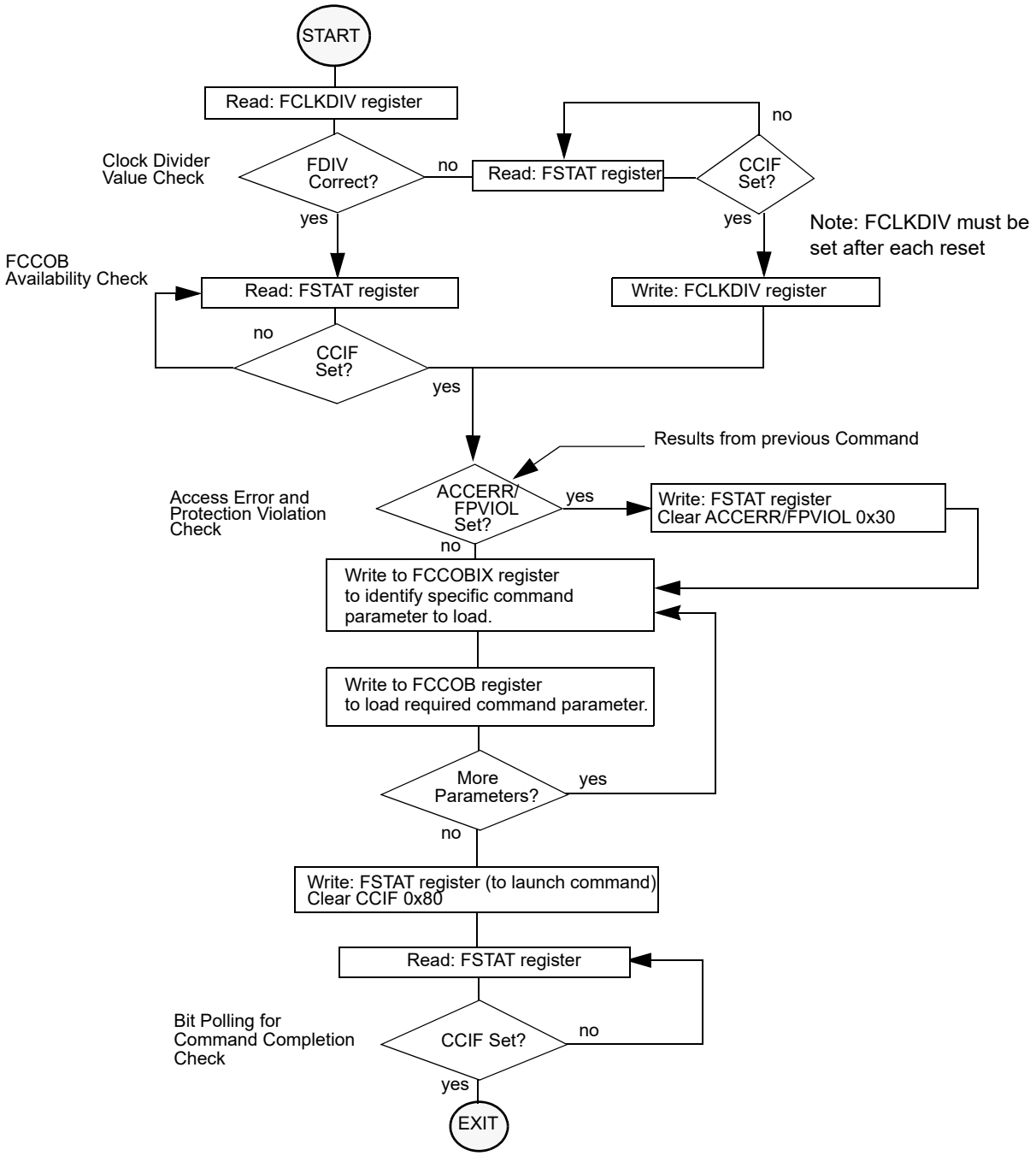

Figure 30-26. Generic Flash Command Write Sequence Flowchart

30.4.4.3 Valid Flash Module Commands

Table 30-27 present the valid Flash commands, as enabled by the combination of the functional MCU mode (Normal SingleChip NS, Special Singlechip SS) with the MCU security state (Unsecured, Secured).

Special Singlechip mode is selected by input mmc_ss_mode_ts2 asserted. MCU Secured state is selected by input mmc_secure input asserted.

Table 30-27. Flash Commands by Mode and Security State

FCMD	Command	Unsecured		Secured	
		NS[1]	SS[2]	NS[3]	SS[4]
0x01	Erase Verify All Blocks	*	*	*	*
0x02	Erase Verify Block	*	*	*	*
0x03	Erase Verify P-Flash Section	*	*	*	
0x04	Read Once	*	*	*	
0x06	Program P-Flash	*	*	*	
0x07	Program Once	*	*	*	
0x08	Erase All Blocks		*		*
0x09	Erase Flash Block	*	*	*	
0x0A	Erase P-Flash Sector	*	*	*	
0x0B	Unsecure Flash		*		*
0x0C	Verify Backdoor Access Key	*		*	
0x0D	Set User Margin Level	*	*	*	
0x0E	Set Field Margin Level		*		
0x10	Erase Verify EEPROM Section	*	*	*	
0x11	Program EEPROM	*	*	*	
0x12	Erase EEPROM Sector	*	*	*	

1 Unsecured Normal Single Chip mode
2 Unsecured Special Single Chip mode.
3 Secured Normal Single Chip mode.
4 Secured Special Single Chip mode.

30.4.4.4 P-Flash Commands

Table 30-28 summarizes the valid P-Flash commands along with the effects of the commands on the P-Flash block and other resources within the Flash module.

Table 30-28. P-Flash Commands

FCMD	Command	Function on P-Flash Memory
0x01	Erase Verify All Blocks	Verify that all P-Flash (and EEPROM) blocks are erased.

Table 30-28. P-Flash Commands

FCMD	Command	Function on P-Flash Memory
0x02	Erase Verify Block	Verify that a P-Flash block is erased.
0x03	Erase Verify P-Flash Section	Verify that a given number of words starting at the address provided are erased.
0x04	Read Once	Read a dedicated 64 byte field in the nonvolatile information register in P-Flash block that was previously programmed using the Program Once command.
0x06	Program P-Flash	Program a phrase in a P-Flash block.
0x07	Program Once	Program a dedicated 64 byte field in the nonvolatile information register in P-Flash block that is allowed to be programmed only once.
0x08	Erase All Blocks	Erase all P-Flash (and EEPROM) blocks. An erase of all Flash blocks is only possible when the FPLDIS, FPHDIS, and FPOPEN bits in the FPROT register and the DPOPEN bit in the EEPROT register are set prior to launching the command.
0x09	Erase Flash Block	Erase a P-Flash (or EEPROM) block. An erase of the full P-Flash block is only possible when FPLDIS, FPHDIS and FPOPEN bits in the FPROT register are set prior to launching the command.
0x0A	Erase P-Flash Sector	Erase all bytes in a P-Flash sector.
0x0B	Unsecure Flash	Supports a method of releasing MCU security by erasing all P-Flash (and EEPROM) blocks and verifying that all P-Flash (and EEPROM) blocks are erased.
0x0C	Verify Backdoor Access Key	Supports a method of releasing MCU security by verifying a set of security keys.
0x0D	Set User Margin Level	Specifies a user margin read level for all P-Flash blocks.
0x0E	Set Field Margin Level	Specifies a field margin read level for all P-Flash blocks (special modes only).

30.4.4.5 EEPROM Commands

Table 30-29 summarizes the valid EEPROM commands along with the effects of the commands on the EEPROM block.

Table 30-29. EEPROM Commands

FCMD	Command	Function on EEPROM Memory
0x01	Erase Verify All Blocks	Verify that all EEPROM (and P-Flash) blocks are erased.
0x02	Erase Verify Block	Verify that the EEPROM block is erased.

Table 30-29. EEPROM Commands

FCMD	Command	Function on EEPROM Memory
0x08	Erase All Blocks	Erase all EEPROM (and P-Flash) blocks. An erase of all Flash blocks is only possible when the FPLDIS, FPHDIS, and FPOPEN bits in the FPROT register and the DPOPEN bit in the EEPROT register are set prior to launching the command.
0x09	Erase Flash Block	Erase a EEPROM (or P-Flash) block. An erase of the full EEPROM block is only possible when DPOPEN bit in the EEPROT register is set prior to launching the command.
0x0B	Unsecure Flash	Supports a method of releasing MCU security by erasing all EEPROM (and P-Flash) blocks and verifying that all EEPROM (and P-Flash) blocks are erased.
0x0D	Set User Margin Level	Specifies a user margin read level for the EEPROM block.
0x0E	Set Field Margin Level	Specifies a field margin read level for the EEPROM block (special modes only).
0x10	Erase Verify EEPROM Section	Verify that a given number of words starting at the address provided are erased.
0x11	Program EEPROM	Program up to four words in the EEPROM block.
0x12	Erase EEPROM Sector	Erase all bytes in a sector of the EEPROM block.

30.4.5 Allowed Simultaneous P-Flash and EEPROM Operations

Only the operations marked ‘OK’ in Table 30-30 are permitted to be run simultaneously on the Program Flash and EEPROM blocks. Some operations cannot be executed simultaneously because certain hardware resources are shared by the two memories. The priority has been placed on permitting Program Flash reads while program and erase operations execute on the EEPROM, providing read (P-Flash) while write (EEPROM) functionality.

Table 30-30. Allowed P-Flash and EEPROM Simultaneous Operations

	EEPROM				
Program Flash	**Read**	**Margin Read[1]**	**Program**	**Sector Erase**	**Mass Erase[2]**
Read		OK	OK	OK	
Margin Read[1]					
Program					
Sector Erase					
Mass Erase[2]					OK

1 A ‘Margin Read’ is any read after executing the margin setting commands ‘Set User Margin Level’ or ‘Set Field Margin Level’ with anything but the ‘normal’ level specified. See the Note on margin settings in Section 30.4.6.12 and Section 30.4.6.13.

2 The ‘Mass Erase’ operations are commands ‘Erase All Blocks’ and ‘Erase Flash Block’

30.4.6 Flash Command Description

This section provides details of all available Flash commands launched by a command write sequence. The ACCERR bit in the FSTAT register will be set during the command write sequence if any of the following illegal steps are performed, causing the command not to be processed by the Memory Controller:

- Starting any command write sequence that programs or erases Flash memory before initializing the FCLKDIV register
- Writing an invalid command as part of the command write sequence
- For additional possible errors, refer to the error handling table provided for each command

If a Flash block is read during execution of an algorithm (CCIF = 0) on that same block, the read operation will return invalid data if both flags SFDIF and DFDIF are set. If the SFDIF or DFDIF flags were not previously set when the invalid read operation occurred, both the SFDIF and DFDIF flags will be set.

If the ACCERR or FPVIOL bits are set in the FSTAT register, the user must clear these bits before starting any command write sequence (see Section 30.3.2.7).

CAUTION

A Flash word or phrase must be in the erased state before being programmed. Cumulative programming of bits within a Flash word or phrase is not allowed.

30.4.6.1 Erase Verify All Blocks Command

The Erase Verify All Blocks command will verify that all P-Flash and EEPROM blocks have been erased.

Table 30-31. Erase Verify All Blocks Command FCCOB Requirements

CCOBIX[2:0]	FCCOB Parameters	
000	0x01	Not required

Upon clearing CCIF to launch the Erase Verify All Blocks command, the Memory Controller will verify that the entire Flash memory space is erased. The CCIF flag will set after the Erase Verify All Blocks operation has completed. If all blocks are not erased, it means blank check failed, both MGSTAT bits will be set.

Table 30-32. Erase Verify All Blocks Command Error Handling

Register	Error Bit	Error Condition
FSTAT	ACCERR	Set if CCOBIX[2:0] != 000 at command launch
	FPVIOL	None
	MGSTAT1	Set if any errors have been encountered during the reador if blank check failed .
	MGSTAT0	Set if any non-correctable errors have been encountered during the read or if blank check failed.

30.4.6.2 Erase Verify Block Command

The Erase Verify Block command allows the user to verify that an entire P-Flash or EEPROM block has been erased. The FCCOB FlashBlockSelectionCode[1:0]bits determine which block must be verified.

Table 30-33. Erase Verify Block Command FCCOB Requirements

CCOBIX[2:0]	FCCOB Parameters	
000	0x02	Flash block selection code [1:0]. See Table 30-34

Table 30-34. Flash block selection code description

Selection code[1:0]	Flash block to be verified
00	EEPROM
01	P-Flash
10	P-Flash
11	P-Flash

Upon clearing CCIF to launch the Erase Verify Block command, the Memory Controller will verify that the selected P-Flash or EEPROM block is erased. The CCIF flag will set after the Erase Verify Block operation has completed.If the block is not erased, it means blank check failed, both MGSTAT bits will be set.

Table 30-35. Erase Verify Block Command Error Handling

Register	Error Bit	Error Condition
FSTAT	ACCERR	Set if CCOBIX[2:0] != 000 at command launch.
	FPVIOL	None.
	MGSTAT1	Set if any errors have been encountered during the read or if blank check failed.
	MGSTAT0	Set if any non-correctable errors have been encountered during the read[1] or if blank check failed.

30.4.6.3 Erase Verify P-Flash Section Command

The Erase Verify P-Flash Section command will verify that a section of code in the P-Flash memory is erased. The Erase Verify P-Flash Section command defines the starting point of the code to be verified and the number of phrases.

Table 30-36. Erase Verify P-Flash Section Command FCCOB Requirements

CCOBIX[2:0]	FCCOB Parameters	
000	0x03	Global address [17:16] of a P-Flash block
001	Global address [15:0] of the first phrase to be verified	
010	Number of phrases to be verified	

Upon clearing CCIF to launch the Erase Verify P-Flash Section command, the Memory Controller will verify the selected section of Flash memory is erased. The CCIF flag will set after the Erase Verify P-Flash Section operation has completed. If the section is not erased, it means blank check failed, both MGSTAT bits will be set.

Table 30-37. Erase Verify P-Flash Section Command Error Handling

Register	Error Bit	Error Condition
FSTAT	ACCERR	Set if CCOBIX[2:0] != 010 at command launch
		Set if command not available in current mode (see Table 30-27)
		Set if an invalid global address [17:0] is supplied see Table 30-3)
		Set if a misaligned phrase address is supplied (global address [2:0] != 000)
		Set if the requested section crosses a the P-Flash address boundary
	FPVIOL	None
	MGSTAT1	Set if any errors have been encountered during the read or if blank check failed.
	MGSTAT0	Set if any non-correctable errors have been encountered during the read or if blank check failed.

30.4.6.4 Read Once Command

The Read Once command provides read access to a reserved 64 byte field (8 phrases) located in the nonvolatile information register of P-Flash. The Read Once field is programmed using the Program Once command described in Section 30.4.6.6. The Read Once command must not be executed from the Flash block containing the Program Once reserved field to avoid code runaway.

Table 30-38. Read Once Command FCCOB Requirements

CCOBIX[2:0]	FCCOB Parameters	
000	0x04	Not Required
001	Read Once phrase index (0x0000 - 0x0007)	
010	Read Once word 0 value	
011	Read Once word 1 value	
100	Read Once word 2 value	
101	Read Once word 3 value	

Upon clearing CCIF to launch the Read Once command, a Read Once phrase is fetched and stored in the FCCOB indexed register. The CCIF flag will set after the Read Once operation has completed. Valid phrase index values for the Read Once command range from 0x0000 to 0x0007. During execution of the Read Once command, any attempt to read addresses within P-Flash block will return invalid data.

Table 30-39. Read Once Command Error Handling

Register	Error Bit	Error Condition
FSTAT	ACCERR	Set if CCOBIX[2:0] != 001 at command launch
		Set if command not available in current mode (see Table 30-27)
		Set if an invalid phrase index is supplied
	FPVIOL	None
	MGSTAT1	Set if any errors have been encountered during the read
	MGSTAT0	Set if any non-correctable errors have been encountered during the read

30.4.6.5 Program P-Flash Command

The Program P-Flash operation will program a previously erased phrase in the P-Flash memory using an embedded algorithm.

CAUTION

A P-Flash phrase must be in the erased state before being programmed. Cumulative programming of bits within a Flash phrase is not allowed.

Table 30-40. Program P-Flash Command FCCOB Requirements

CCOBIX[2:0]	FCCOB Parameters	
000	0x06	Global address [17:16] to identify P-Flash block
001	Global address [15:0] of phrase location to be programmed[1]	
010	Word 0 program value	
011	Word 1 program value	
100	Word 2 program value	
101	Word 3 program value	

1 Global address [2:0] must be 000

Upon clearing CCIF to launch the Program P-Flash command, the Memory Controller will program the data words to the supplied global address and will then proceed to verify the data words read back as expected. The CCIF flag will set after the Program P-Flash operation has completed.

Table 30-41. Program P-Flash Command Error Handling

Register	Error Bit	Error Condition
FSTAT	ACCERR	Set if CCOBIX[2:0] != 101 at command launch
		Set if command not available in current mode (see Table 30-27)
		Set if an invalid global address [17:0] is supplied see Table 30-3)
		Set if a misaligned phrase address is supplied (global address [2:0] != 000)
	FPVIOL	Set if the global address [17:0] points to a protected area
	MGSTAT1	Set if any errors have been encountered during the verify operation
	MGSTAT0	Set if any non-correctable errors have been encountered during the verify operation

30.4.6.6 Program Once Command

The Program Once command restricts programming to a reserved 64 byte field (8 phrases) in the nonvolatile information register located in P-Flash. The Program Once reserved field can be read using the Read Once command as described in Section 30.4.6.4. The Program Once command must only be issued once since the nonvolatile information register in P-Flash cannot be erased. The Program Once command must not be executed from the Flash block containing the Program Once reserved field to avoid code runaway.

Table 30-42. Program Once Command FCCOB Requirements

CCOBIX[2:0]	FCCOB Parameters	
000	0x07	Not Required
001	Program Once phrase index (0x0000 - 0x0007)	
010	Program Once word 0 value	
011	Program Once word 1 value	
100	Program Once word 2 value	
101	Program Once word 3 value	

Upon clearing CCIF to launch the Program Once command, the Memory Controller first verifies that the selected phrase is erased. If erased, then the selected phrase will be programmed and then verified with read back. The CCIF flag will remain clear, setting only after the Program Once operation has completed.

The reserved nonvolatile information register accessed by the Program Once command cannot be erased and any attempt to program one of these phrases a second time will not be allowed. Valid phrase index values for the Program Once command range from 0x0000 to 0x0007. During execution of the Program Once command, any attempt to read addresses within P-Flash will return invalid data.

Table 30-43. Program Once Command Error Handling

Register	Error Bit	Error Condition
FSTAT	ACCERR	Set if CCOBIX[2:0] != 101 at command launch
		Set if command not available in current mode (see Table 30-27)
		Set if an invalid phrase index is supplied
		Set if the requested phrase has already been programmed[1]
	FPVIOL	None
	MGSTAT1	Set if any errors have been encountered during the verify operation
	MGSTAT0	Set if any non-correctable errors have been encountered during the verify operation

1 If a Program Once phrase is initially programmed to 0xFFFF_FFFF_FFFF_FFFF, the Program Once command will be allowed to execute again on that same phrase.

30.4.6.7 Erase All Blocks Command

The Erase All Blocks operation will erase the entire P-Flash and EEPROM memory space.

Table 30-44. Erase All Blocks Command FCCOB Requirements

CCOBIX[2:0]	FCCOB Parameters	
000	0x08	Not required

Upon clearing CCIF to launch the Erase All Blocks command, the Memory Controller will erase the entire Flash memory space and verify that it is erased. If the Memory Controller verifies that the entire Flash memory space was properly erased, security will be released. During the execution of this command (CCIF=0) the user must not write to any Flash module register. The CCIF flag will set after the Erase All Blocks operation has completed.

Table 30-45. Erase All Blocks Command Error Handling

Register	Error Bit	Error Condition
FSTAT	ACCERR	Set if CCOBIX[2:0] != 000 at command launch
		Set if command not available in current mode (see Table 30-27)
	FPVIOL	Set if any area of the P-Flash or EEPROM memory is protected
	MGSTAT1	Set if any errors have been encountered during the verify operation
	MGSTAT0	Set if any non-correctable errors have been encountered during the verify operation

30.4.6.8 Erase Flash Block Command

The Erase Flash Block operation will erase all addresses in a P-Flash or EEPROM block.

Table 30-46. Erase Flash Block Command FCCOB Requirements

CCOBIX[2:0]	FCCOB Parameters	
000	0x09	Global address [17:16] to identify Flash block
001	Global address [15:0] in Flash block to be erased	

Upon clearing CCIF to launch the Erase Flash Block command, the Memory Controller will erase the selected Flash block and verify that it is erased. The CCIF flag will set after the Erase Flash Block operation has completed.

Table 30-47. Erase Flash Block Command Error Handling

Register	Error Bit	Error Condition
FSTAT	ACCERR	Set if CCOBIX[2:0] != 001 at command launch
		Set if command not available in current mode (see Table 30-27)
		Set if an invalid global address [17:16] is supplied
		Set if the supplied P-Flash address is not phrase-aligned or if the EEPROM address is not word-aligned
	FPVIOL	Set if an area of the selected Flash block is protected
	MGSTAT1	Set if any errors have been encountered during the verify operation
	MGSTAT0	Set if any non-correctable errors have been encountered during the verify operation

30.4.6.9 Erase P-Flash Sector Command

The Erase P-Flash Sector operation will erase all addresses in a P-Flash sector.

Table 30-48. Erase P-Flash Sector Command FCCOB Requirements

CCOBIX[2:0]	FCCOB Parameters	
000	0x0A	Global address [17:16] to identify P-Flash block to be erased
001	Global address [15:0] anywhere within the sector to be erased. Refer to Section 30.1.2.1 for the P-Flash sector size.	

Upon clearing CCIF to launch the Erase P-Flash Sector command, the Memory Controller will erase the selected Flash sector and then verify that it is erased. The CCIF flag will be set after the Erase P-Flash Sector operation has completed.

Table 30-49. Erase P-Flash Sector Command Error Handling

Register	Error Bit	Error Condition
FSTAT	ACCERR	Set if CCOBIX[2:0] != 001 at command launch
		Set if command not available in current mode (see Table 30-27)
		Set if an invalid global address [17:16] is supplied see Table 30-3)
		Set if a misaligned phrase address is supplied (global address [2:0] != 000)
	FPVIOL	Set if the selected P-Flash sector is protected
	MGSTAT1	Set if any errors have been encountered during the verify operation
	MGSTAT0	Set if any non-correctable errors have been encountered during the verify operation

30.4.6.10 Unsecure Flash Command

The Unsecure Flash command will erase the entire P-Flash and EEPROM memory space and, if the erase is successful, will release security.

Table 30-50. Unsecure Flash Command FCCOB Requirements

CCOBIX[2:0]	FCCOB Parameters	
000	0x0B	Not required

Upon clearing CCIF to launch the Unsecure Flash command, the Memory Controller will erase the entire P-Flash and EEPROM memory space and verify that it is erased. If the Memory Controller verifies that the entire Flash memory space was properly erased, security will be released. If the erase verify is not successful, the Unsecure Flash operation sets MGSTAT1 and terminates without changing the security state. During the execution of this command (CCIF=0) the user must not write to any Flash module register. The CCIF flag is set after the Unsecure Flash operation has completed.

Table 30-51. Unsecure Flash Command Error Handling

Register	Error Bit	Error Condition
FSTAT	ACCERR	Set if CCOBIX[2:0] != 000 at command launch
		Set if command not available in current mode (see Table 30-27)
	FPVIOL	Set if any area of the P-Flash or EEPROM memory is protected
	MGSTAT1	Set if any errors have been encountered during the verify operation
	MGSTAT0	Set if any non-correctable errors have been encountered during the verify operation

30.4.6.11 Verify Backdoor Access Key Command

The Verify Backdoor Access Key command will only execute if it is enabled by the KEYEN bits in the FSEC register (see Table 30-10). The Verify Backdoor Access Key command releases security if user-supplied keys match those stored in the Flash security bytes of the Flash configuration field (see

Table 30-4). The Verify Backdoor Access Key command must not be executed from the Flash block containing the backdoor comparison key to avoid code runaway.

Table 30-52. Verify Backdoor Access Key Command FCCOB Requirements

CCOBIX[2:0]	FCCOB Parameters	
000	0x0C	Not required
001	Key 0	
010	Key 1	
011	Key 2	
100	Key 3	

Upon clearing CCIF to launch the Verify Backdoor Access Key command, the Memory Controller will check the FSEC KEYEN bits to verify that this command is enabled. If not enabled, the Memory Controller sets the ACCERR bit in the FSTAT register and terminates. If the command is enabled, the Memory Controller compares the key provided in FCCOB to the backdoor comparison key in the Flash configuration field with Key 0 compared to 0x3_FF00, etc. If the backdoor keys match, security will be released. If the backdoor keys do not match, security is not released and all future attempts to execute the Verify Backdoor Access Key command are aborted (set ACCERR) until a reset occurs. The CCIF flag is set after the Verify Backdoor Access Key operation has completed.

Table 30-53. Verify Backdoor Access Key Command Error Handling

Register	Error Bit	Error Condition
FSTAT	ACCERR	Set if CCOBIX[2:0] != 100 at command launch
		Set if an incorrect backdoor key is supplied
		Set if backdoor key access has not been enabled (KEYEN[1:0] != 10, see Section 30.3.2.2)
		Set if the backdoor key has mismatched since the last reset
	FPVIOL	None
	MGSTAT1	None
	MGSTAT0	None

30.4.6.12 Set User Margin Level Command

The Set User Margin Level command causes the Memory Controller to set the margin level for future read operations of the P-Flash or EEPROM block.

Table 30-54. Set User Margin Level Command FCCOB Requirements

CCOBIX[2:0]	FCCOB Parameters	
000	0x0D	Flash block selection code [1:0]. See Table 30-34
001	Margin level setting.	

Upon clearing CCIF to launch the Set User Margin Level command, the Memory Controller will set the user margin level for the targeted block and then set the CCIF flag.

NOTE

When the EEPROM block is targeted, the EEPROM user margin levels are applied only to the EEPROM reads. However, when the P-Flash block is targeted, the P-Flash user margin levels are applied to both P-Flash and EEPROM reads. It is not possible to apply user margin levels to the P-Flash block only.

Valid margin level settings for the Set User Margin Level command are defined in Table 30-55.

Table 30-55. Valid Set User Margin Level Settings

CCOB (CCOBIX=001)	Level Description
0x0000	Return to Normal Level
0x0001	User Margin-1 Level[1]
0x0002	User Margin-0 Level[2]

[1] Read margin to the erased state

[2] Read margin to the programmed state

Table 30-56. Set User Margin Level Command Error Handling

Register	Error Bit	Error Condition
FSTAT	ACCERR	Set if CCOBIX[2:0] != 001 at command launch.
		Set if command not available in current mode (see Table 30-27).
		Set if an invalid margin level setting is supplied.
	FPVIOL	None
	MGSTAT1	None
	MGSTAT0	None

NOTE

User margin levels can be used to check that Flash memory contents have adequate margin for normal level read operations. If unexpected results are encountered when checking Flash memory contents at user margin levels, a potential loss of information has been detected.

30.4.6.13 Set Field Margin Level Command

The Set Field Margin Level command, valid in special modes only, causes the Memory Controller to set the margin level specified for future read operations of the P-Flash or EEPROM block.

Table 30-57. Set Field Margin Level Command FCCOB Requirements

CCOBIX[2:0]	FCCOB Parameters	
000	0x0E	Flash block selection code [1:0]. See Table 30-34
001	Margin level setting.	

Upon clearing CCIF to launch the Set Field Margin Level command, the Memory Controller will set the field margin level for the targeted block and then set the CCIF flag.

NOTE

When the EEPROM block is targeted, the EEPROM field margin levels are applied only to the EEPROM reads. However, when the P-Flash block is targeted, the P-Flash field margin levels are applied to both P-Flash and EEPROM reads. It is not possible to apply field margin levels to the P-Flash block only.

Valid margin level settings for the Set Field Margin Level command are defined in Table 30-58.

Table 30-58. Valid Set Field Margin Level Settings

CCOB (CCOBIX=001)	Level Description
0x0000	Return to Normal Level
0x0001	User Margin-1 Level[1]
0x0002	User Margin-0 Level[2]
0x0003	Field Margin-1 Level[1]
0x0004	Field Margin-0 Level[2]

1 Read margin to the erased state

2 Read margin to the programmed state

Table 30-59. Set Field Margin Level Command Error Handling

Register	Error Bit	Error Condition
FSTAT	ACCERR	Set if CCOBIX[2:0] != 001 at command launch.
		Set if command not available in current mode (see Table 30-27).
		Set if an invalid margin level setting is supplied.
	FPVIOL	None
	MGSTAT1	None
	MGSTAT0	None

CAUTION

Field margin levels must only be used during verify of the initial factory programming.

NOTE

Field margin levels can be used to check that Flash memory contents have adequate margin for data retention at the normal level setting. If unexpected results are encountered when checking Flash memory contents at field margin levels, the Flash memory contents should be erased and reprogrammed.

30.4.6.14 Erase Verify EEPROM Section Command

The Erase Verify EEPROM Section command will verify that a section of code in the EEPROM is erased. The Erase Verify EEPROM Section command defines the starting point of the data to be verified and the number of words.

Table 30-60. Erase Verify EEPROM Section Command FCCOB Requirements

CCOBIX[2:0]	FCCOB Parameters	
000	0x10	Global address [17:16] to identify the EEPROM block
001	Global address [15:0] of the first word to be verified	
010	Number of words to be verified	

Upon clearing CCIF to launch the Erase Verify EEPROM Section command, the Memory Controller will verify the selected section of EEPROM memory is erased. The CCIF flag will set after the Erase Verify EEPROM Section operation has completed. If the section is not erased, it means blank check failed, both MGSTAT bits will be set.

Table 30-61. Erase Verify EEPROM Section Command Error Handling

Register	Error Bit	Error Condition
FSTAT	ACCERR	Set if CCOBIX[2:0] != 010 at command launch
		Set if command not available in current mode (see Table 30-27)
		Set if an invalid global address [17:0] is supplied
		Set if a misaligned word address is supplied (global address [0] != 0)
		Set if the requested section breaches the end of the EEPROM block
	FPVIOL	None
	MGSTAT1	Set if any errors have been encountered during the read or if blank check failed.
	MGSTAT0	Set if any non-correctable errors have been encountered during the read or if blank check failed.

30.4.6.15 Program EEPROM Command

The Program EEPROM operation programs one to four previously erased words in the EEPROM block. The Program EEPROM operation will confirm that the targeted location(s) were successfully programmed upon completion.

CAUTION

A Flash word must be in the erased state before being programmed. Cumulative programming of bits within a Flash word is not allowed.

Table 30-62. Program EEPROM Command FCCOB Requirements

CCOBIX[2:0]	FCCOB Parameters	
000	0x11	Global address [17:16] to identify the EEPROM block
001	Global address [15:0] of word to be programmed	
010	Word 0 program value	
011	Word 1 program value, if desired	
100	Word 2 program value, if desired	
101	Word 3 program value, if desired	

Upon clearing CCIF to launch the Program EEPROM command, the user-supplied words will be transferred to the Memory Controller and be programmed if the area is unprotected. The CCOBIX index value at Program EEPROM command launch determines how many words will be programmed in the EEPROM block. The CCIF flag is set when the operation has completed.

Table 30-63. Program EEPROM Command Error Handling

Register	Error Bit	Error Condition
FSTAT	ACCERR	Set if CCOBIX[2:0] < 010 at command launch
		Set if CCOBIX[2:0] > 101 at command launch
		Set if command not available in current mode (see Table 30-27)
		Set if an invalid global address [17:0] is supplied
		Set if a misaligned word address is supplied (global address [0] != 0)
		Set if the requested group of words breaches the end of the EEPROM block
	FPVIOL	Set if the selected area of the EEPROM memory is protected
	MGSTAT1	Set if any errors have been encountered during the verify operation
	MGSTAT0	Set if any non-correctable errors have been encountered during the verify operation

30.4.6.16 Erase EEPROM Sector Command

The Erase EEPROM Sector operation will erase all addresses in a sector of the EEPROM block.

Table 30-64. Erase EEPROM Sector Command FCCOB Requirements

CCOBIX[2:0]	FCCOB Parameters	
000	0x12	Global address [17:16] to identify EEPROM block
001	Global address [15:0] anywhere within the sector to be erased. See Section 30.1.2.2 for EEPROM sector size.	

Upon clearing CCIF to launch the Erase EEPROM Sector command, the Memory Controller will erase the selected Flash sector and verify that it is erased. The CCIF flag will set after the Erase EEPROM Sector operation has completed.

Table 30-65. Erase EEPROM Sector Command Error Handling

Register	Error Bit	Error Condition
FSTAT	ACCERR	Set if CCOBIX[2:0] != 001 at command launch
		Set if command not available in current mode (see Table 30-27)
		Set if an invalid global address [17:0] is suppliedsee Table 30-3)
		Set if a misaligned word address is supplied (global address [0] != 0)
	FPVIOL	Set if the selected area of the EEPROM memory is protected
	MGSTAT1	Set if any errors have been encountered during the verify operation
	MGSTAT0	Set if any non-correctable errors have been encountered during the verify operation

30.4.7 Interrupts

The Flash module can generate an interrupt when a Flash command operation has completed or when a Flash command operation has detected an ECC fault.

Table 30-66. Flash Interrupt Sources

Interrupt Source	Interrupt Flag	Local Enable	Global (CCR) Mask
Flash Command Complete	CCIF (FSTAT register)	CCIE (FCNFG register)	I Bit
ECC Double Bit Fault on Flash Read	DFDIF (FERSTAT register)	DFDIE (FERCNFG register)	I Bit
ECC Single Bit Fault on Flash Read	SFDIF (FERSTAT register)	SFDIE (FERCNFG register)	I Bit

NOTE

Vector addresses and their relative interrupt priority are determined at the MCU level.

30.4.7.1 Description of Flash Interrupt Operation

The Flash module uses the CCIF flag in combination with the CCIE interrupt enable bit to generate the Flash command interrupt request. The Flash module uses the DFDIF and SFDIF flags in combination with the DFDIE and SFDIE interrupt enable bits to generate the Flash error interrupt request. For a detailed description of the register bits involved, refer to Section 30.3.2.5, “Flash Configuration Register (FCNFG)”, Section 30.3.2.6, “Flash Error Configuration Register (FERCNFG)”, Section 30.3.2.7, “Flash Status Register (FSTAT)”, and Section 30.3.2.8, “Flash Error Status Register (FERSTAT)”.

The logic used for generating the Flash module interrupts is shown in Figure 30-27.

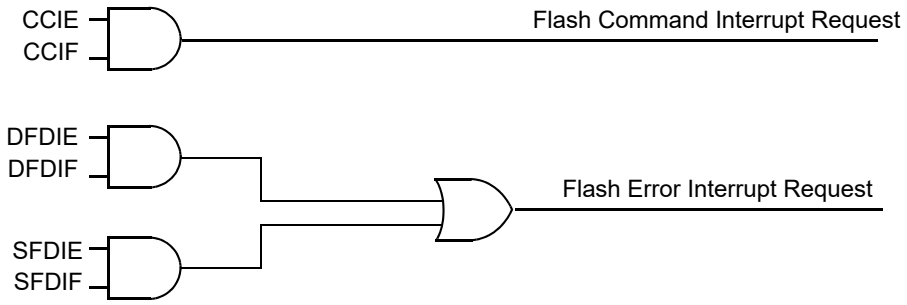

Figure 30-27. Flash Module Interrupts Implementation

30.4.8 Wait Mode

The Flash module is not affected if the MCU enters wait mode. The Flash module can recover the MCU from wait via the CCIF interrupt (see Section 30.4.7, “Interrupts”).

30.4.9 Stop Mode

If a Flash command is active (CCIF = 0) when the MCU requests stop mode, the current Flash operation will be completed before the MCU is allowed to enter stop mode.

30.5 Security

The Flash module provides security information to the MCU. The Flash security state is defined by the SEC bits of the FSEC register (see Table 30-11). During reset, the Flash module initializes the FSEC register using data read from the security byte of the Flash configuration field at global address 0x3_FF0F. The security state out of reset can be permanently changed by programming the security byte assuming that the MCU is starting from a mode where the necessary P-Flash erase and program commands are available and that the upper region of the P-Flash is unprotected. If the Flash security byte is successfully programmed, its new value will take affect after the next MCU reset.

The following subsections describe these security-related subjects:

- Unsecuring the MCU using Backdoor Key Access
- Unsecuring the MCU in Special Single Chip Mode using BDM
- Mode and Security Effects on Flash Command Availability

30.5.1 Unsecuring the MCU using Backdoor Key Access

The MCU may be unsecured by using the backdoor key access feature which requires knowledge of the contents of the backdoor keys (four 16-bit words programmed at addresses 0x3_FF00-0x3_FF07). If the KEYEN[1:0] bits are in the enabled state (see Section 30.3.2.2), the Verify Backdoor Access Key command (see Section 30.4.6.11) allows the user to present four prospective keys for comparison to the keys stored in the Flash memory via the Memory Controller. If the keys presented in the Verify Backdoor Access Key command match the backdoor keys stored in the Flash memory, the SEC bits in the FSEC register (see Table 30-11) will be changed to unsecure the MCU. Key values of 0x0000 and 0xFFFF are not permitted as backdoor keys. While the Verify Backdoor Access Key command is active, P-Flash memory and EEPROM memory will not be available for read access and will return invalid data.

The user code stored in the P-Flash memory must have a method of receiving the backdoor keys from an external stimulus. This external stimulus would typically be through one of the on-chip serial ports.

If the KEYEN[1:0] bits are in the enabled state (see Section 30.3.2.2), the MCU can be unsecured by the backdoor key access sequence described below:

1. Follow the command sequence for the Verify Backdoor Access Key command as explained in Section 30.4.6.11
2. If the Verify Backdoor Access Key command is successful, the MCU is unsecured and the SEC[1:0] bits in the FSEC register are forced to the unsecure state of 10

The Verify Backdoor Access Key command is monitored by the Memory Controller and an illegal key will prohibit future use of the Verify Backdoor Access Key command. A reset of the MCU is the only method to re-enable the Verify Backdoor Access Key command. The security as defined in the Flash security byte (0x3_FF0F) is not changed by using the Verify Backdoor Access Key command sequence. The backdoor keys stored in addresses 0x3_FF00-0x3_FF07 are unaffected by the Verify Backdoor Access Key command sequence. The Verify Backdoor Access Key command sequence has no effect on the program and erase protections defined in the Flash protection register, FPROT.

After the backdoor keys have been correctly matched, the MCU will be unsecured. After the MCU is unsecured, the sector containing the Flash security byte can be erased and the Flash security byte can be

reprogrammed to the unsecure state, if desired. In the unsecure state, the user has full control of the contents of the backdoor keys by programming addresses 0x3_FF00-0x3_FF07 in the Flash configuration field.

30.5.2 Unsecuring the MCU in Special Single Chip Mode using BDM

A secured MCU can be unsecured in special single chip mode by using the following method to erase the P-Flash and EEPROM memory:

1. Reset the MCU into special single chip mode
2. Delay while the BDM executes the Erase Verify All Blocks command write sequence to check if the P-Flash and EEPROM memories are erased
3. Send BDM commands to disable protection in the P-Flash and EEPROM memory
4. Execute the Erase All Blocks command write sequence to erase the P-Flash and EEPROM memory. Alternatively the Unsecure Flash command can be executed, if so the steps 5 and 6 below are skeeped.
5. After the CCIF flag sets to indicate that the Erase All Blocks operation has completed, reset the MCU into special single chip mode
6. Delay while the BDM executes the Erase Verify All Blocks command write sequence to verify that the P-Flash and EEPROM memory are erased

If the P-Flash and EEPROM memory are verified as erased, the MCU will be unsecured. All BDM commands will now be enabled and the Flash security byte may be programmed to the unsecure state by continuing with the following steps:

7. Send BDM commands to execute the Program P-Flash command write sequence to program the Flash security byte to the unsecured state
8. Reset the MCU

30.5.3 Mode and Security Effects on Flash Command Availability

The availability of Flash module commands depends on the MCU operating mode and security state as shown in Table 30-27.

30.6 Initialization

On each system reset the flash module executes an initialization sequence which establishes initial values for the Flash Block Configuration Parameters, the FPROT and EEPROT protection registers, and the FOPT and FSEC registers. The initialization routine reverts to built-in default values that leave the module in a fully protected and secured state if errors are encountered during execution of the reset sequence. If a double bit fault is detected during the reset sequence, both MGSTAT bits in the FSTAT register will be set.

CCIF is cleared throughout the initialization sequence. The Flash module holds off all CPU access for a portion of the initialization sequence. Flash reads are allowed once the hold is removed. Completion of the initialization sequence is marked by setting CCIF high which enables user commands.

If a reset occurs while any Flash command is in progress, that command will be immediately aborted. The state of the word being programmed or the sector/block being erased is not guaranteed.

Chapter 31
240 KByte Flash Module (S12FTMRG240K2V1)

Table 31-1. Revision History

Revision Number	Revision Date	Sections Affected	Description of Changes
V01.06	23 Jun 2010	31.4.6.2/31-1159 31.4.6.12/31-1166 31.4.6.13/31-1167	Updated description of the commands RD1BLK, MLOADU and MLOADF
V01.07	20 Aug 2010	31.4.6.2/31-1159 31.4.6.12/31-1166 31.4.6.13/31-1167	Updated description of the commands RD1BLK, MLOADU and MLOADF
V01.08	31 Jan 2011	31.3.2.9/31-1142	Updated description of protection on Section 31.3.2.9

31.1 Introduction

The FTMRG240K2 module implements the following:

- 240Kbytes of P-Flash (Program Flash) memory
- 4Kbytes of EEPROM memory

The Flash memory is ideal for single-supply applications allowing for field reprogramming without requiring external high voltage sources for program or erase operations. The Flash module includes a memory controller that executes commands to modify Flash memory contents. The user interface to the memory controller consists of the indexed Flash Common Command Object (FCCOB) register which is written to with the command, global address, data, and any required command parameters. The memory controller must complete the execution of a command before the FCCOB register can be written to with a new command.

CAUTION

A Flash word or phrase must be in the erased state before being programmed. Cumulative programming of bits within a Flash word or phrase is not allowed.

The Flash memory may be read as bytes and aligned words. Read access time is one bus cycle for bytes and aligned words. For misaligned words access, the CPU has to perform twice the byte read access command. For Flash memory, an erased bit reads 1 and a programmed bit reads 0.

It is possible to read from P-Flash memory while some commands are executing on EEPROM memory. It is not possible to read from EEPROM memory while a command is executing on P-Flash memory. Simultaneous P-Flash and EEPROM operations are discussed in Section 31.4.5.

Both P-Flash and EEPROM memories are implemented with Error Correction Codes (ECC) that can resolve single bit faults and detect double bit faults. For P-Flash memory, the ECC implementation requires that programming be done on an aligned 8 byte basis (a Flash phrase). Since P-Flash memory is always read by half-phrase, only one single bit fault in an aligned 4 byte half-phrase containing the byte or word accessed will be corrected.

31.1.1 Glossary

Command Write Sequence — An MCU instruction sequence to execute built-in algorithms (including program and erase) on the Flash memory.

EEPROM Memory — The EEPROM memory constitutes the nonvolatile memory store for data.

EEPROM Sector — The EEPROM sector is the smallest portion of the EEPROM memory that can be erased. The EEPROM sector consists of 4 bytes.

NVM Command Mode — An NVM mode using the CPU to setup the FCCOB register to pass parameters required for Flash command execution.

Phrase — An aligned group of four 16-bit words within the P-Flash memory. Each phrase includes two sets of aligned double words with each set including 7 ECC bits for single bit fault correction and double bit fault detection within each double word.

P-Flash Memory — The P-Flash memory constitutes the main nonvolatile memory store for applications.

P-Flash Sector — The P-Flash sector is the smallest portion of the P-Flash memory that can be erased. Each P-Flash sector contains 512 bytes.

Program IFR — Nonvolatile information register located in the P-Flash block that contains the Version ID, and the Program Once field.

31.1.2 Features

31.1.2.1 P-Flash Features

- 240 Kbytes of P-Flash memory divided into 480 sectors of 512 bytes
- Single bit fault correction and double bit fault detection within a 32-bit double word during read operations
- Automated program and erase algorithm with verify and generation of ECC parity bits
- Fast sector erase and phrase program operation

- Ability to read the P-Flash memory while programming a word in the EEPROM memory
- Flexible protection scheme to prevent accidental program or erase of P-Flash memory

31.1.2.2 EEPROM Features

- 4 Kbytes of EEPROM memory composed of one 4 Kbyte Flash block divided into 1024 sectors of 4 bytes
- Single bit fault correction and double bit fault detection within a word during read operations
- Automated program and erase algorithm with verify and generation of ECC parity bits
- Fast sector erase and word program operation
- Protection scheme to prevent accidental program or erase of EEPROM memory
- Ability to program up to four words in a burst sequence

31.1.2.3 Other Flash Module Features

- No external high-voltage power supply required for Flash memory program and erase operations
- Interrupt generation on Flash command completion and Flash error detection
- Security mechanism to prevent unauthorized access to the Flash memory

31.1.3 Block Diagram

The block diagram of the Flash module is shown in Figure 31-1.

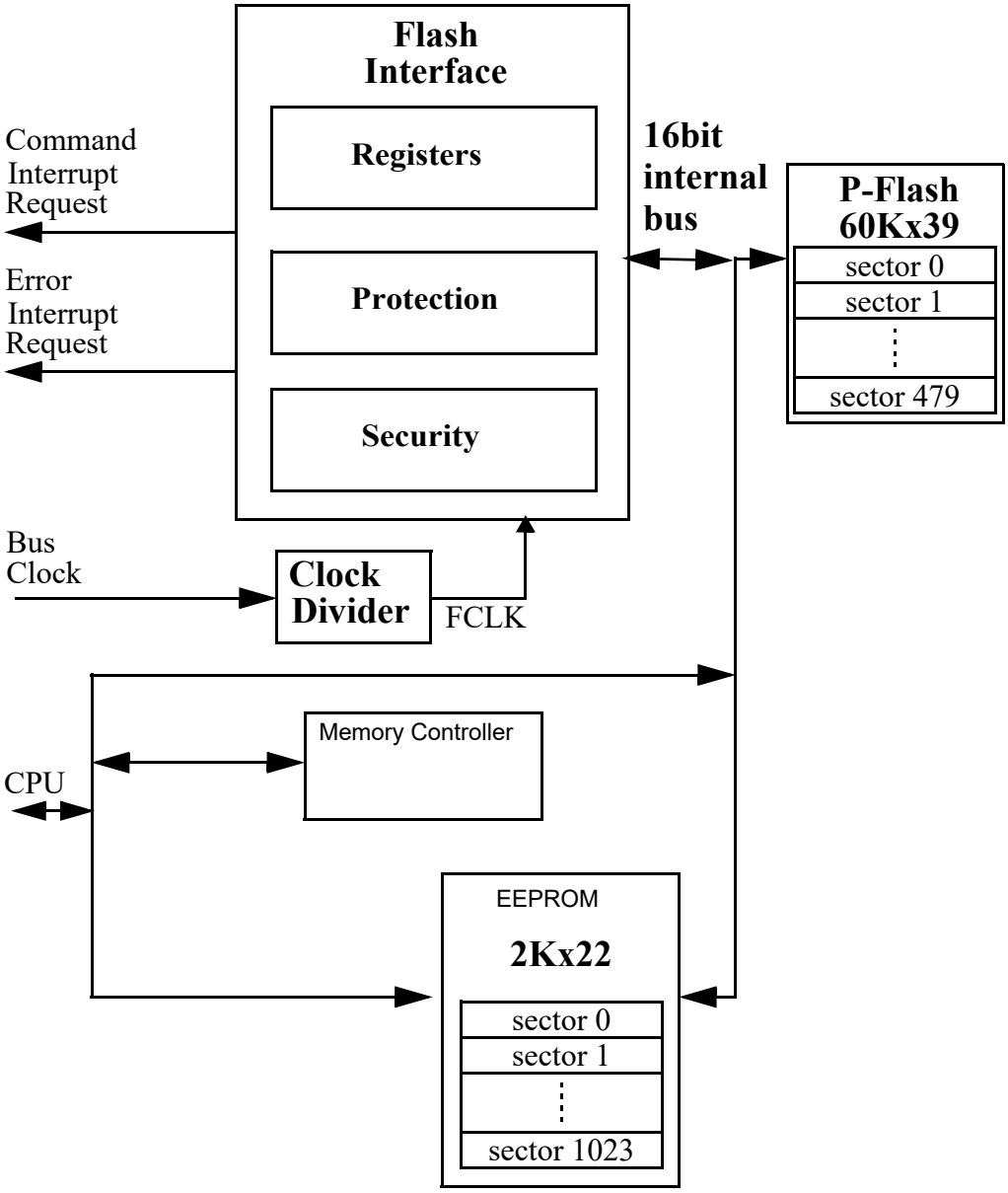

Figure 31-1. FTMRG240K2 Block Diagram

31.2 External Signal Description

The Flash module contains no signals that connect off-chip.

31.3 Memory Map and Registers

This section describes the memory map and registers for the Flash module. Read data from unimplemented memory space in the Flash module is undefined. Write access to unimplemented or reserved memory space in the Flash module will be ignored by the Flash module.

CAUTION

Writing to the Flash registers while a Flash command is executing (that is indicated when the value of flag CCIF reads as ’0’) is not allowed. If such action is attempted the write operation will not change the register value.

Writing to the Flash registers is allowed when the Flash is not busy executing commands (CCIF = 1) and during initialization right after reset, despite the value of flag CCIF in that case (refer to Section 31.6 for a complete description of the reset sequence).

.

Table 31-2. FTMRG Memory Map

Global Address (in Bytes)	Size (Bytes)	Description
0x0_0000 - 0x0_03FF	1,024	Register Space
0x0_0400 – 0x0_13FF	4,096	EEPROM Memory
0x0_4000 – 0x0_7FFF	16,284	NVMRES=0 : P-Flash Memory area active
0x0_4000 – 0x0_7FFF	16,284	NVMRES[1]=1 : NVM Resource area (see Figure 31-3)
0x0_8000 – 0x3_FFFF	229,376	P-Flash Memory

[1] See NVMRES description in Section 31.4.3

31.3.1 Module Memory Map

The S12 architecture places the P-Flash memory between global addresses 0x0_4000 and 0x3_FFFF as shown in Table 31-3 .The P-Flash memory map is shown in Figure 31-2.

Table 31-3. P-Flash Memory Addressing

Global Address	Size (Bytes)	Description
0x0_4000 – 0x3_FFFF	240 K	P-Flash Block Contains Flash Configuration Field (see Table 31-4).

The FPROT register, described in Section 31.3.2.9, can be set to protect regions in the Flash memory from accidental program or erase. The Flash memory addresses covered by these protectable regions are shown in the P-Flash memory map. The higher address region is mainly targeted to hold the boot loader code since it covers the vector space. Default protection settings as well as security information that allows the MCU to restrict access to the Flash module are stored in the Flash configuration field as described in Table 31-4.

Table 31-4. Flash Configuration Field

Global Address	Size (Bytes)	Description
0x3_FF00-0x3_FF07	8	Backdoor Comparison Key Refer to Section 31.4.6.11, “Verify Backdoor Access Key Command,” and Section 31.5.1, “Unsecuring the MCU using Backdoor Key Access”
0x3_FF08-0x3_FF0B[1]	4	Reserved
0x3_FF0C[1]	1	P-Flash Protection byte. Refer to Section 31.3.2.9, “P-Flash Protection Register (FPROT)”
0x3_FF0D[1]	1	EEPROM Protection byte. Refer to Section 31.3.2.10, “EEPROM Protection Register (EEPROT)”
0x3_FF0E[1]	1	Flash Nonvolatile byte Refer to Section 31.3.2.16, “Flash Option Register (FOPT)”
0x3_FF0F[1]	1	Flash Security byte Refer to Section 31.3.2.2, “Flash Security Register (FSEC)”

[1] 0x3FF08-0x3_FF0F form a Flash phrase and must be programmed in a single command write sequence. Each byte in the 0x3_FF08 - 0x3_FF0B reserved field should be programmed to 0xFF.

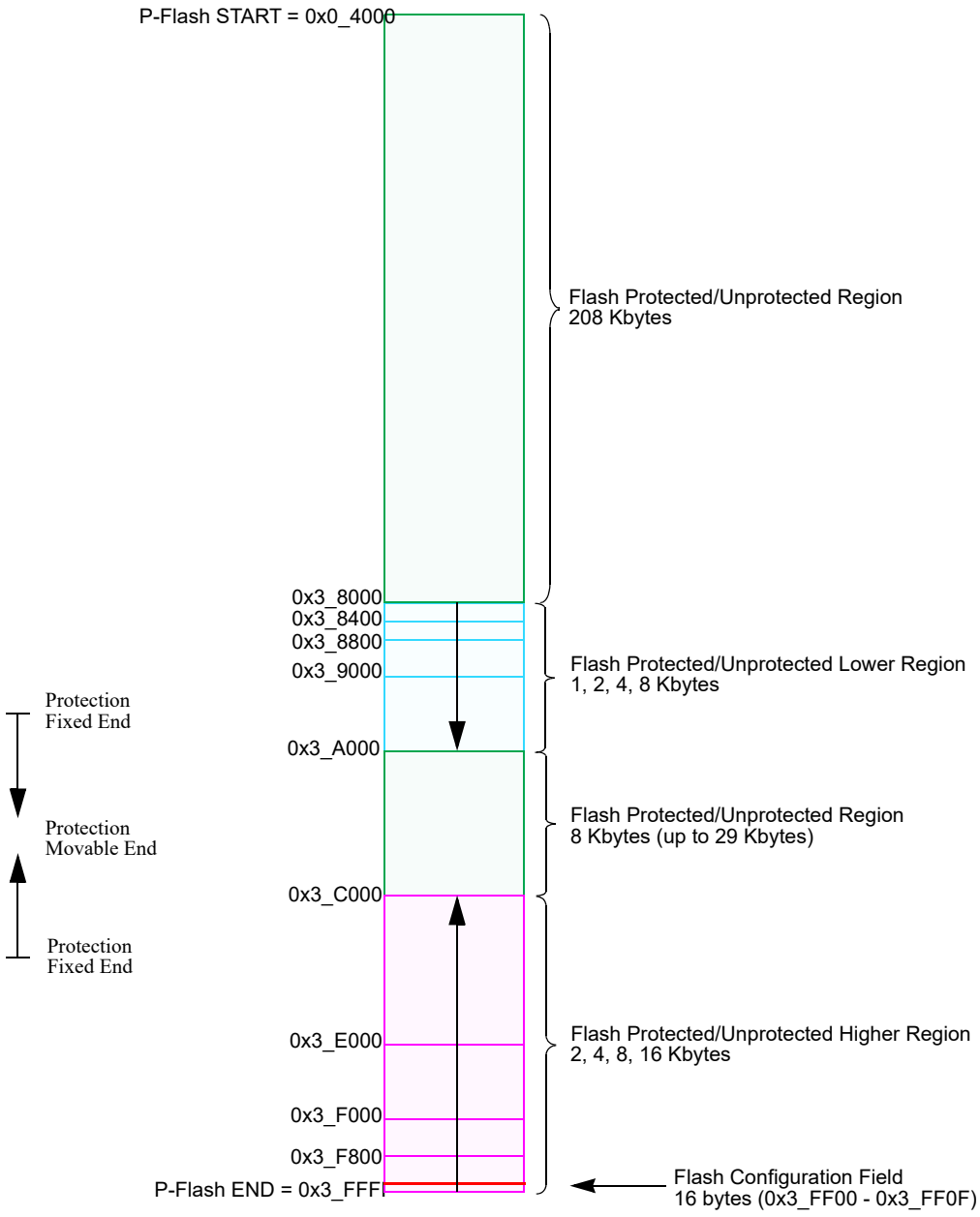

Figure 31-2. P-Flash Memory Map

Table 31-5. Program IFR Fields

Global Address	Size (Bytes)	Field Description
0x0_4000 – 0x0_4007	8	Reserved
0x0_4008 – 0x0_40B5	174	Reserved
0x0_40B6 – 0x0_40B7	2	Version ID[1]

Table 31-5. Program IFR Fields

Global Address	Size (Bytes)	Field Description
0x0_40B8 – 0x0_40BF	8	Reserved
0x0_40C0 – 0x0_40FF	64	Program Once Field Refer to Section 31.4.6.6, “Program Once Command”

1 Used to track firmware patch versions, see Section 31.4.2

Table 31-6. Memory Controller Resource Fields (NVMRES[1]=1)

Global Address	Size (Bytes)	Description
0x0_4000 – 0x040FF	256	P-Flash IFR (see Table 31-5)
0x0_4100 – 0x0_41FF	256	Reserved.
0x0_4200 – 0x0_57FF		Reserved
0x0_5800 – 0x0_5AFF	768	Reserved
0x0_5B00 – 0x0_5FFF	1,280	Reserved
0x0_6000 – 0x0_67FF	2,048	Reserved
0x0_6800 – 0x0_7FFF	6,144	Reserved

1 NVMRES - See Section 31.4.3 for NVMRES (NVM Resource) detail.

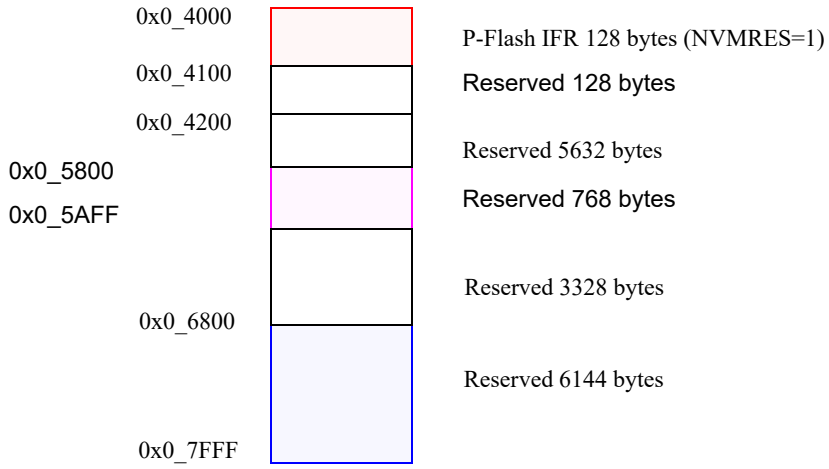

Figure 31-3. Memory Controller Resource Memory Map (NVMRES=1)

31.3.2 Register Descriptions

The Flash module contains a set of 20 control and status registers located between Flash module base + 0x0000 and 0x0013.

In the case of the writable registers, the write accesses are forbidden during Fash command execution (for more detail, see Caution note in Section 31.3).

A summary of the Flash module registers is given in Figure 31-4 with detailed descriptions in the following subsections.

Address & Name		7	6	5	4	3	2	1	0
0x0000 FCLKDIV	R	FDIVLD	FDIVLCK	FDIV5	FDIV4	FDIV3	FDIV2	FDIV1	FDIV0
	W								
0x0001 FSEC	R	KEYEN1	KEYEN0	RNV5	RNV4	RNV3	RNV2	SEC1	SEC0
	W								
0x0002 FCCOBIX	R	0	0	0	0	0	CCOBIX2	CCOBIX1	CCOBIX0
	W								
0x0003 FRSV0	R	0	0	0	0	0	0	0	0
	W								
0x0004 FCNFG	R	CCIE	0	0	IGNSF	0	0	FDFD	FSFD
	W								
0x0005 FERCNFG	R	0	0	0	0	0	0	DFDIE	SFDIE
	W								
0x0006 FSTAT	R	CCIF	0	ACCERR	FPVIOL	MGBUSY	RSVD	MGSTAT1	MGSTAT0
	W								
0x0007 FERSTAT	R	0	0	0	0	0	0	DFDIF	SFDIF
	W								
0x0008 FPROT	R	FPOPEN	RNV6	FPHDIS	FPHS1	FPHS0	FPLDIS	FPLS1	FPLS0
	W								
0x0009 EEPROT	R	DPOPEN	DPS6	DPS5	DPS4	DPS3	DPS2	DPS1	DPS0
	W								

Figure 31-4. FTMRG240K2 Register Summary

Address & Name		7	6	5	4	3	2	1	0
0x000A FCCOBHI	R	CCOB15	CCOB14	CCOB13	CCOB12	CCOB11	CCOB10	CCOB9	CCOB8
	W								
0x000B FCCOBLO	R	CCOB7	CCOB6	CCOB5	CCOB4	CCOB3	CCOB2	CCOB1	CCOB0
	W								
0x000C FRSV1	R	0	0	0	0	0	0	0	0
	W								
0x000D FRSV2	R	0	0	0	0	0	0	0	0
	W								
0x000E FRSV3	R	0	0	0	0	0	0	0	0
	W								
0x000F FRSV4	R	0	0	0	0	0	0	0	0
	W								
0x0010 FOPT	R	NV7	NV6	NV5	NV4	NV3	NV2	NV1	NV0
	W								
0x0011 FRSV5	R	0	0	0	0	0	0	0	0
	W								
0x0012 FRSV6	R	0	0	0	0	0	0	0	0
	W								
0x0013 FRSV7	R	0	0	0	0	0	0	0	0
	W								

= Unimplemented or Reserved

Figure 31-4. FTMRG240K2 Register Summary (continued)

31.3.2.1 Flash Clock Divider Register (FCLKDIV)

The FCLKDIV register is used to control timed events in program and erase algorithms.

Offset Module Base + 0x0000

	7	6	5	4	3	2	1	0
R	FDIVLD	FDIVLCK	FDIV[5:0]					
W								
Reset	0	0	0	0	0	0	0	0

= Unimplemented or Reserved

Figure 31-5. Flash Clock Divider Register (FCLKDIV)

All bits in the FCLKDIV register are readable, bit 7 is not writable, bit 6 is write-once-hi and controls the writability of the FDIV field in normal mode. In special mode, bits 6-0 are writable any number of times but bit 7 remains unwritable.

CAUTION

The FCLKDIV register should never be written while a Flash command is executing (CCIF=0).

Table 31-7. FCLKDIV Field Descriptions

Field	Description
7 FDIVLD	Clock Divider Loaded 0 FCLKDIV register has not been written since the last reset 1 FCLKDIV register has been written since the last reset
6 FDIVLCK	Clock Divider Locked 0 FDIV field is open for writing 1 FDIV value is locked and cannot be changed. Once the lock bit is set high, only reset can clear this bit and restore writability to the FDIV field in normal mode.
5–0 FDIV[5:0]	**Clock Divider Bits** — FDIV[5:0] must be set to effectively divide BUSCLK down to 1 MHz to control timed events during Flash program and erase algorithms. Table 31-8 shows recommended values for FDIV[5:0] based on the BUSCLK frequency. Please refer to Section 31.4.4, “Flash Command Operations,” for more information.

Table 31-8. FDIV values for various BUSCLK Frequencies

BUSCLK Frequency (MHz)		FDIV[5:0]	BUSCLK Frequency (MHz)		FDIV[5:0]
MIN[1]	MAX[2]		MIN[1]	MAX[2]	
1.0	1.6	0x00	16.6	17.6	0x10
1.6	2.6	0x01	17.6	18.6	0x11
2.6	3.6	0x02	18.6	19.6	0x12
3.6	4.6	0x03	19.6	20.6	0x13
4.6	5.6	0x04	20.6	21.6	0x14
5.6	6.6	0x05	21.6	22.6	0x15
6.6	7.6	0x06	22.6	23.6	0x16
7.6	8.6	0x07	23.6	24.6	0x17
8.6	9.6	0x08	24.6	25.6	0x18
9.6	10.6	0x09			
10.6	11.6	0x0A			
11.6	12.6	0x0B			
12.6	13.6	0x0C			
13.6	14.6	0x0D			
14.6	15.6	0x0E			
15.6	16.6	0x0F			

1 BUSCLK is Greater Than this value.

2 BUSCLK is Less Than or Equal to this value.

31.3.2.2 Flash Security Register (FSEC)

The FSEC register holds all bits associated with the security of the MCU and Flash module.

Offset Module Base + 0x0001

	7	6	5	4	3	2	1	0
R	KEYEN[1:0]		RNV[5:2]				SEC[1:0]	
W								
Reset	F[1]	F[1]	F[1]	F[1]	F[1]	F[1]	F[1]	F[1]

= Unimplemented or Reserved

Figure 31-6. Flash Security Register (FSEC)

1 Loaded from IFR Flash configuration field, during reset sequence.

All bits in the FSEC register are readable but not writable.

During the reset sequence, the FSEC register is loaded with the contents of the Flash security byte in the Flash configuration field at global address 0x3_FF0F located in P-Flash memory (see Table 31-4) as

indicated by reset condition F in Figure 31-6. If a double bit fault is detected while reading the P-Flash phrase containing the Flash security byte during the reset sequence, all bits in the FSEC register will be set to leave the Flash module in a secured state with backdoor key access disabled.

Table 31-9. FSEC Field Descriptions

Field	Description
7–6 KEYEN[1:0]	**Backdoor Key Security Enable Bits** — The KEYEN[1:0] bits define the enabling of backdoor key access to the Flash module as shown in Table 31-10.
5–2 RNV[5:2]	**Reserved Nonvolatile Bits** — The RNV bits should remain in the erased state for future enhancements.
1–0 SEC[1:0]	**Flash Security Bits** — The SEC[1:0] bits define the security state of the MCU as shown in Table 31-11. If the Flash module is unsecured using backdoor key access, the SEC bits are forced to 10.

Table 31-10. Flash KEYEN States

KEYEN[1:0]	Status of Backdoor Key Access
00	DISABLED
01	DISABLED[1]
10	ENABLED
11	DISABLED

1 Preferred KEYEN state to disable backdoor key access.

Table 31-11. Flash Security States

SEC[1:0]	Status of Security
00	SECURED
01	SECURED[1]
10	UNSECURED
11	SECURED

1 Preferred SEC state to set MCU to secured state.

The security function in the Flash module is described in Section 31.5.

31.3.2.3 Flash CCOB Index Register (FCCOBIX)

The FCCOBIX register is used to index the FCCOB register for Flash memory operations.

Offset Module Base + 0x0002

	7	6	5	4	3	2	1	0
R	0	0	0	0	0	CCOBIX[2:0]		
W								
Reset	0	0	0	0	0	0	0	0

= Unimplemented or Reserved

Figure 31-7. FCCOB Index Register (FCCOBIX)

CCOBIX bits are readable and writable while remaining bits read 0 and are not writable.

Table 31-12. FCCOBIX Field Descriptions

Field	Description
2–0 CCOBIX[1:0]	**Common Command Register Index**— The CCOBIX bits are used to select which word of the FCCOB register array is being read or written to. See 31.3.2.11 Flash Common Command Object Register (FCCOB)," for more details.

31.3.2.4 Flash Reserved0 Register (FRSV0)

This Flash register is reserved for factory testing.

Offset Module Base + 0x000C

	7	6	5	4	3	2	1	0
R	0	0	0	0	0	0	0	0
W								
Reset	0	0	0	0	0	0	0	0

= Unimplemented or Reserved

Figure 31-8. Flash Reserved0 Register (FRSV0)

All bits in the FRSV0 register read 0 and are not writable.

31.3.2.5 Flash Configuration Register (FCNFG)

The FCNFG register enables the Flash command complete interrupt and forces ECC faults on Flash array read access from the CPU.

Offset Module Base + 0x0004

	7	6	5	4	3	2	1	0
R	CCIE	0	0	IGNSF	0	0	FDFD	FSFD
W								
Reset	0	0	0	0	0	0	0	0

= Unimplemented or Reserved

Figure 31-9. Flash Configuration Register (FCNFG)

CCIE, IGNSF, FDFD, and FSFD bits are readable and writable while remaining bits read 0 and are not writable.

Table 31-13. FCNFG Field Descriptions

Field	Description
7 CCIE	**Command Complete Interrupt Enable** — The CCIE bit controls interrupt generation when a Flash command has completed. 0 Command complete interrupt disabled 1 An interrupt will be requested whenever the CCIF flag in the FSTAT register is set (see Section 31.3.2.7)
4 IGNSF	**Ignore Single Bit Fault** — The IGNSF controls single bit fault reporting in the FERSTAT register (see Section 31.3.2.8). 0 All single bit faults detected during array reads are reported 1 Single bit faults detected during array reads are not reported and the single bit fault interrupt will not be generated
1 FDFD	**Force Double Bit Fault Detect** — The FDFD bit allows the user to simulate a double bit fault during Flash array read operations and check the associated interrupt routine. The FDFD bit is cleared by writing a 0 to FDFD. 0 Flash array read operations will set the DFDIF flag in the FERSTAT register only if a double bit fault is detected 1 Any Flash array read operation will force the DFDIF flag in the FERSTAT register to be set (see Section 31.3.2.7) and an interrupt will be generated as long as the DFDIE interrupt enable in the FERCNFG register is set (see Section 31.3.2.6)
0 FSFD	**Force Single Bit Fault Detect** — The FSFD bit allows the user to simulate a single bit fault during Flash array read operations and check the associated interrupt routine. The FSFD bit is cleared by writing a 0 to FSFD. 0 Flash array read operations will set the SFDIF flag in the FERSTAT register only if a single bit fault is detected 1 Flash array read operation will force the SFDIF flag in the FERSTAT register to be set (see Section 31.3.2.7) and an interrupt will be generated as long as the SFDIE interrupt enable in the FERCNFG register is set (see Section 31.3.2.6)

31.3.2.6 Flash Error Configuration Register (FERCNFG)

The FERCNFG register enables the Flash error interrupts for the FERSTAT flags.

Offset Module Base + 0x0005

	7	6	5	4	3	2	1	0
R	0	0	0	0	0	0	DFDIE	SFDIE
W								
Reset	0	0	0	0	0	0	0	0

= Unimplemented or Reserved

Figure 31-10. Flash Error Configuration Register (FERCNFG)

All assigned bits in the FERCNFG register are readable and writable.

Table 31-14. FERCNFG Field Descriptions

Field	Description
1 DFDIE	**Double Bit Fault Detect Interrupt Enable** — The DFDIE bit controls interrupt generation when a double bit fault is detected during a Flash block read operation. 0 DFDIF interrupt disabled 1 An interrupt will be requested whenever the DFDIF flag is set (see Section 31.3.2.8)
0 SFDIE	**Single Bit Fault Detect Interrupt Enable** — The SFDIE bit controls interrupt generation when a single bit fault is detected during a Flash block read operation. 0 SFDIF interrupt disabled whenever the SFDIF flag is set (see Section 31.3.2.8) 1 An interrupt will be requested whenever the SFDIF flag is set (see Section 31.3.2.8)

31.3.2.7 Flash Status Register (FSTAT)

The FSTAT register reports the operational status of the Flash module.

Offset Module Base + 0x0006

	7	6	5	4	3	2	1	0
R	CCIF	0	ACCERR	FPVIOL	MGBUSY	RSVD	MGSTAT[1:0]	
W								
Reset	1	0	0	0	0	0	0[1]	0[1]

= Unimplemented or Reserved

Figure 31-11. Flash Status Register (FSTAT)

[1] Reset value can deviate from the value shown if a double bit fault is detected during the reset sequence (see Section 31.6).

CCIF, ACCERR, and FPVIOL bits are readable and writable, MGBUSY and MGSTAT bits are readable but not writable, while remaining bits read 0 and are not writable.

Table 31-15. FSTAT Field Descriptions

Field	Description
7 CCIF	**Command Complete Interrupt Flag** — The CCIF flag indicates that a Flash command has completed. The CCIF flag is cleared by writing a 1 to CCIF to launch a command and CCIF will stay low until command completion or command violation. 0 Flash command in progress 1 Flash command has completed
5 ACCERR	**Flash Access Error Flag** — The ACCERR bit indicates an illegal access has occurred to the Flash memory caused by either a violation of the command write sequence (see Section 31.4.4.2) or issuing an illegal Flash command. While ACCERR is set, the CCIF flag cannot be cleared to launch a command. The ACCERR bit is cleared by writing a 1 to ACCERR. Writing a 0 to the ACCERR bit has no effect on ACCERR. 0 No access error detected 1 Access error detected
4 FPVIOL	**Flash Protection Violation Flag** —The FPVIOL bit indicates an attempt was made to program or erase an address in a protected area of P-Flash or EEPROM memory during a command write sequence. The FPVIOL bit is cleared by writing a 1 to FPVIOL. Writing a 0 to the FPVIOL bit has no effect on FPVIOL. While FPVIOL is set, it is not possible to launch a command or start a command write sequence. 0 No protection violation detected 1 Protection violation detected

Table 31-15. FSTAT Field Descriptions (continued)

Field	Description
3 MGBUSY	**Memory Controller Busy Flag** — The MGBUSY flag reflects the active state of the Memory Controller. 0 Memory Controller is idle 1 Memory Controller is busy executing a Flash command (CCIF = 0)
2 RSVD	**Reserved Bit** — This bit is reserved and always reads 0.
1–0 MGSTAT[1:0]	**Memory Controller Command Completion Status Flag** — One or more MGSTAT flag bits are set if an error is detected during execution of a Flash command or during the Flash reset sequence. See Section 31.4.6, “Flash Command Description,” and Section 31.6, “Initialization” for details.

31.3.2.8 Flash Error Status Register (FERSTAT)

The FERSTAT register reflects the error status of internal Flash operations.

Offset Module Base + 0x0007

	7	6	5	4	3	2	1	0
R	0	0	0	0	0	0	DFDIF	SFDIF
W								
Reset	0	0	0	0	0	0	0	0

= Unimplemented or Reserved

Figure 31-12. Flash Error Status Register (FERSTAT)

All flags in the FERSTAT register are readable and only writable to clear the flag.

Table 31-16. FERSTAT Field Descriptions

Field	Description
1 DFDIF	**Double Bit Fault Detect Interrupt Flag** — The setting of the DFDIF flag indicates that a double bit fault was detected in the stored parity and data bits during a Flash array read operation or that a Flash array read operation returning invalid data was attempted on a Flash block that was under a Flash command operation.[1] The DFDIF flag is cleared by writing a 1 to DFDIF. Writing a 0 to DFDIF has no effect on DFDIF.[2] 0 No double bit fault detected 1 Double bit fault detected or a Flash array read operation returning invalid data was attempted while command running
0 SFDIF	**Single Bit Fault Detect Interrupt Flag** — With the IGNSF bit in the FCNFG register clear, the SFDIF flag indicates that a single bit fault was detected in the stored parity and data bits during a Flash array read operation or that a Flash array read operation returning invalid data was attempted on a Flash block that was under a Flash command operation.[1] The SFDIF flag is cleared by writing a 1 to SFDIF. Writing a 0 to SFDIF has no effect on SFDIF. 0 No single bit fault detected 1 Single bit fault detected and corrected or a Flash array read operation returning invalid data was attempted while command running

1 The single bit fault and double bit fault flags are mutually exclusive for parity errors (an ECC fault occurrence can be either single fault or double fault but never both). A simultaneous access collision (Flash array read operation returning invalid data attempted while command running) is indicated when both SFDIF and DFDIF flags are high.

2 There is a one cycle delay in storing the ECC DFDIF and SFDIF fault flags in this register. At least one NOP is required after a flash memory read before checking FERSTAT for the occurrence of ECC errors.

31.3.2.9 P-Flash Protection Register (FPROT)

The FPROT register defines which P-Flash sectors are protected against program and erase operations.

Offset Module Base + 0x0008

	7	6	5	4	3	2	1	0
R	FPOPEN	RNV6	FPHDIS	FPHS[1:0]		FPLDIS	FPLS[1:0]	
W								
Reset	F[1]	F[1]	F[1]	F[1]	F[1]	F[1]	F[1]	F[1]

= Unimplemented or Reserved

Figure 31-13. Flash Protection Register (FPROT)

[1] Loaded from IFR Flash configuration field, during reset sequence.

The (unreserved) bits of the FPROT register are writable with the restriction that the size of the protected region can only be increased (see Section 31.3.2.9.1, “P-Flash Protection Restrictions,” and Table 31-21).

During the reset sequence, the FPROT register is loaded with the contents of the P-Flash protection byte in the Flash configuration field at global address 0x3_FF0C located in P-Flash memory (see Table 31-4) as indicated by reset condition ‘F’ in Figure 31-13. To change the P-Flash protection that will be loaded during the reset sequence, the upper sector of the P-Flash memory must be unprotected, then the P-Flash protection byte must be reprogrammed. If a double bit fault is detected while reading the P-Flash phrase containing the P-Flash protection byte during the reset sequence, the FPOPEN bit will be cleared and remaining bits in the FPROT register will be set to leave the P-Flash memory fully protected.

Trying to alter data in any protected area in the P-Flash memory will result in a protection violation error and the FPVIOL bit will be set in the FSTAT register. The block erase of a P-Flash block is not possible if any of the P-Flash sectors contained in the same P-Flash block are protected.

Table 31-17. FPROT Field Descriptions

Field	Description
7 FPOPEN	**Flash Protection Operation Enable** — The FPOPEN bit determines the protection function for program or erase operations as shown in Table 31-18 for the P-Flash block. 0 When FPOPEN is clear, the FPHDIS and FPLDIS bits define unprotected address ranges as specified by the corresponding FPHS and FPLS bits 1 When FPOPEN is set, the FPHDIS and FPLDIS bits enable protection for the address range specified by the corresponding FPHS and FPLS bits
6 RNV[6]	**Reserved Nonvolatile Bit** — The RNV bit should remain in the erased state for future enhancements.
5 FPHDIS	**Flash Protection Higher Address Range Disable** — The FPHDIS bit determines whether there is a protected/unprotected area in a specific region of the P-Flash memory ending with global address 0x3_FFFF. 0 Protection/Unprotection enabled 1 Protection/Unprotection disabled
4–3 FPHS[1:0]	**Flash Protection Higher Address Size** — The FPHS bits determine the size of the protected/unprotected area in P-Flash memory as shown inTable 31-19. The FPHS bits can only be written to while the FPHDIS bit is set.

Table 31-17. FPROT Field Descriptions (continued)

Field	Description
2 FPLDIS	**Flash Protection Lower Address Range Disable** — The FPLDIS bit determines whether there is a protected/unprotected area in a specific region of the P-Flash memory beginning with global address 0x3_8000. 0 Protection/Unprotection enabled 1 Protection/Unprotection disabled
1–0 FPLS[1:0]	**Flash Protection Lower Address Size** — The FPLS bits determine the size of the protected/unprotected area in P-Flash memory as shown in Table 31-20. The FPLS bits can only be written to while the FPLDIS bit is set.

Table 31-18. P-Flash Protection Function

FPOPEN	FPHDIS	FPLDIS	Function[1]
1	1	1	No P-Flash Protection
1	1	0	Protected Low Range
1	0	1	Protected High Range
1	0	0	Protected High and Low Ranges
0	1	1	Full P-Flash Memory Protected
0	1	0	Unprotected Low Range
0	0	1	Unprotected High Range
0	0	0	Unprotected High and Low Ranges

1 For range sizes, refer to Table 31-19 and Table 31-20.

Table 31-19. P-Flash Protection Higher Address Range

FPHS[1:0]	Global Address Range	Protected Size
00	0x3_F800–0x3_FFFF	2 Kbytes
01	0x3_F000–0x3_FFFF	4 Kbytes
10	0x3_E000–0x3_FFFF	8 Kbytes
11	0x3_C000–0x3_FFFF	16 Kbytes

Table 31-20. P-Flash Protection Lower Address Range

FPLS[1:0]	Global Address Range	Protected Size
00	0x3_8000–0x3_83FF	1 Kbyte
01	0x3_8000–0x3_87FF	2 Kbytes
10	0x3_8000–0x3_8FFF	4 Kbytes
11	0x3_8000–0x3_9FFF	8 Kbytes

All possible P-Flash protection scenarios are shown in Figure 31-14 . Although the protection scheme is loaded from the Flash memory at global address 0x3_FF0C during the reset sequence, it can be changed by the user. The P-Flash protection scheme can be used by applications requiring reprogramming in single chip mode while providing as much protection as possible if reprogramming is not required.

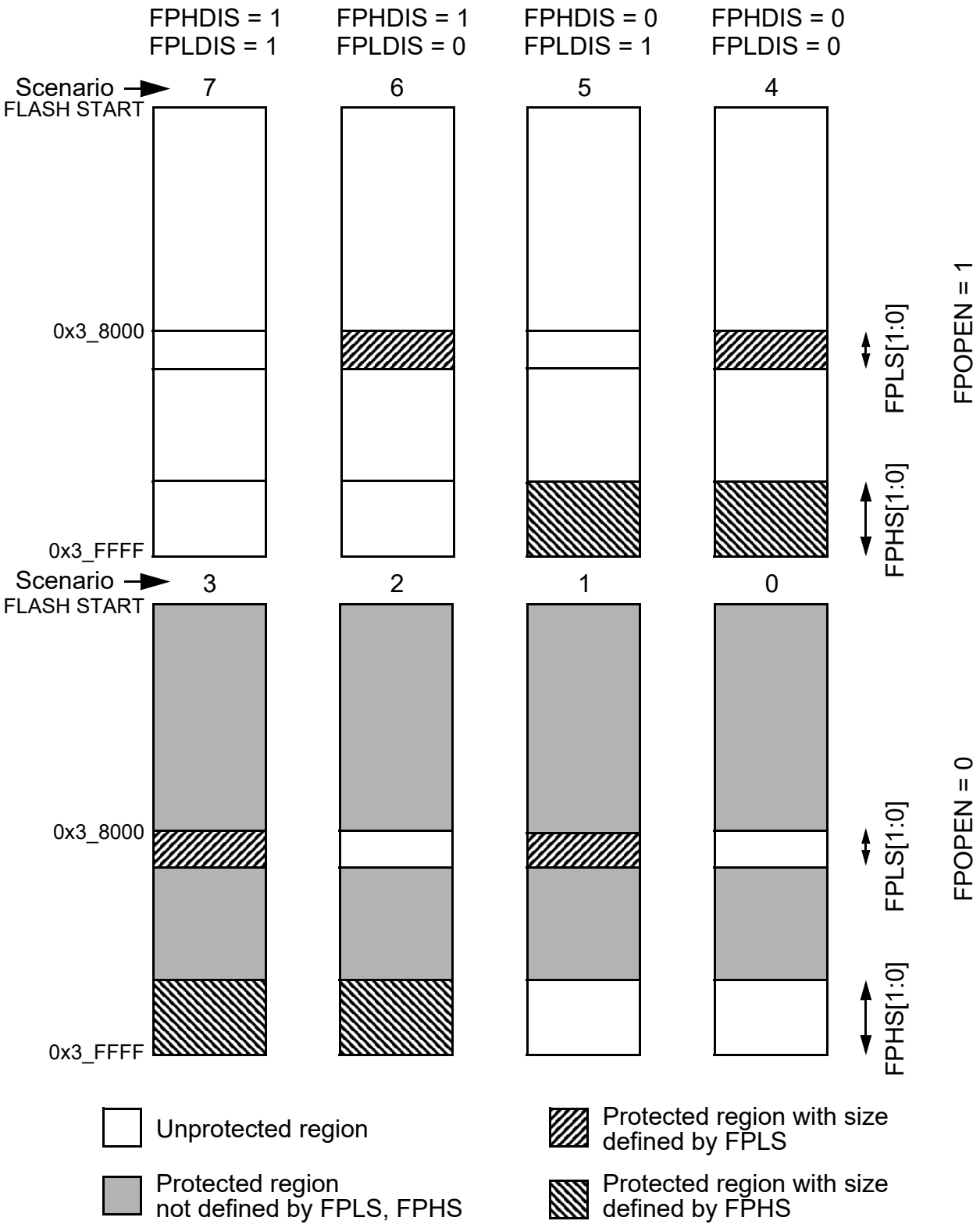

Figure 31-14. P-Flash Protection Scenarios

31.3.2.9.1 P-Flash Protection Restrictions

The general guideline is that P-Flash protection can only be added and not removed. Table 31-21 specifies all valid transitions between P-Flash protection scenarios. Any attempt to write an invalid scenario to the FPROT register will be ignored. The contents of the FPROT register reflect the active protection scenario. See the FPHS and FPLS bit descriptions for additional restrictions.

Table 31-21. P-Flash Protection Scenario Transitions

From Protection Scenario	To Protection Scenario[1]							
	0	1	2	3	4	5	6	7
0	X	X	X	X				
1		X		X				
2			X	X				
3				X				
4				X	X			
5			X	X	X	X		
6		X		X	X		X	
7	X	X	X	X	X	X	X	X

[1] Allowed transitions marked with X, see Figure 31-14 for a definition of the scenarios.

31.3.2.10 EEPROM Protection Register (EEPROT)

The EEPROT register defines which EEPROM sectors are protected against program and erase operations.

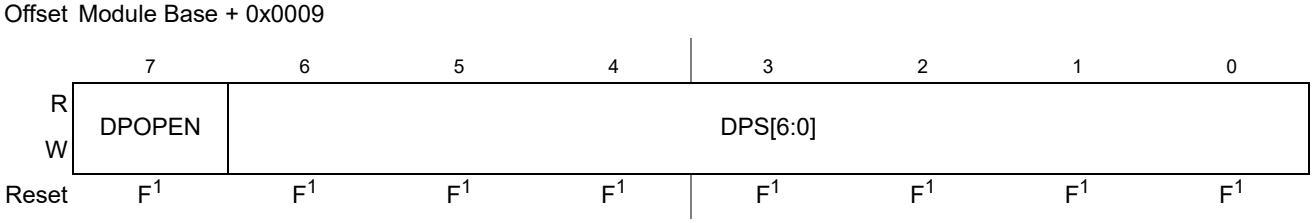

Figure 31-15. EEPROM Protection Register (EEPROT)

[1] Loaded from IFR Flash configuration field, during reset sequence.

The (unreserved) bits of the EEPROT register are writable with the restriction that protection can be added but not removed. Writes must increase the DPS value and the DPOPEN bit can only be written from 1 (protection disabled) to 0 (protection enabled). If the DPOPEN bit is set, the state of the DPS bits is irrelevant.

During the reset sequence, fields DPOPEN and DPS of the EEPROT register are loaded with the contents of the EEPROM protection byte in the Flash configuration field at global address 0x3_FF0D located in

P-Flash memory (see Table 31-4) as indicated by reset condition F in Table 31-23. To change the EEPROM protection that will be loaded during the reset sequence, the P-Flash sector containing the EEPROM protection byte must be unprotected, then the EEPROM protection byte must be programmed. If a double bit fault is detected while reading the P-Flash phrase containing the EEPROM protection byte during the reset sequence, the DPOPEN bit will be cleared and DPS bits will be set to leave the EEPROM memory fully protected.

Trying to alter data in any protected area in the EEPROM memory will result in a protection violation error and the FPVIOL bit will be set in the FSTAT register. Block erase of the EEPROM memory is not possible if any of the EEPROM sectors are protected.

Table 31-22. EEPROT Field Descriptions

Field	Description
7 DPOPEN	EEPROM Protection Control 0 Enables EEPROM memory protection from program and erase with protected address range defined by DPS bits 1 Disables EEPROM memory protection from program and erase
6–0 DPS[6:0]	**EEPROM Protection Size** — The DPS[6:0] bits determine the size of the protected area in the EEPROM memory, this size increase in step of 32 bytes, as shown in Table 31-23 .

Table 31-23. EEPROM Protection Address Range

DPS[6:0]	Global Address Range	Protected Size
0000000	0x0_0400 – 0x0_041F	32 bytes
0000001	0x0_0400 – 0x0_043F	64 bytes
0000010	0x0_0400 – 0x0_045F	96 bytes
0000011	0x0_0400 – 0x0_047F	128 bytes
0000100	0x0_0400 – 0x0_049F	160 bytes
0000101	0x0_0400 – 0x0_04BF	192 bytes
The Protection Size goes on enlarging in step of 32 bytes, for each DPS value increasing of one. . . .		
1111111	0x0_0400 – 0x0_13FF	4,096 bytes

31.3.2.11 Flash Common Command Object Register (FCCOB)

The FCCOB is an array of six words addressed via the CCOBIX index found in the FCCOBIX register. Byte wide reads and writes are allowed to the FCCOB register.

Offset Module Base + 0x000A

	7	6	5	4	3	2	1	0
R W	CCOB[15:8]							
Reset	0	0	0	0	0	0	0	0

Figure 31-16. Flash Common Command Object High Register (FCCOBHI)

Offset Module Base + 0x000B

	7	6	5	4	3	2	1	0
R W	CCOB[7:0]							
Reset	0	0	0	0	0	0	0	0

Figure 31-17. Flash Common Command Object Low Register (FCCOBLO)

31.3.2.11.1 FCCOB - NVM Command Mode

NVM command mode uses the indexed FCCOB register to provide a command code and its relevant parameters to the Memory Controller. The user first sets up all required FCCOB fields and then initiates the command's execution by writing a 1 to the CCIF bit in the FSTAT register (a 1 written by the user clears the CCIF command completion flag to 0). When the user clears the CCIF bit in the FSTAT register all FCCOB parameter fields are locked and cannot be changed by the user until the command completes (as evidenced by the Memory Controller returning CCIF to 1). Some commands return information to the FCCOB register array.

The generic format for the FCCOB parameter fields in NVM command mode is shown in Table 31-24. The return values are available for reading after the CCIF flag in the FSTAT register has been returned to 1 by the Memory Controller. Writes to the unimplemented parameter fields (CCOBIX = 110 and CCOBIX = 111) are ignored with reads from these fields returning 0x0000.

Table 31-24 shows the generic Flash command format. The high byte of the first word in the CCOB array contains the command code, followed by the parameters for this specific Flash command. For details on the FCCOB settings required by each command, see the Flash command descriptions in Section 31.4.6.

Table 31-24. FCCOB - NVM Command Mode (Typical Usage)

CCOBIX[2:0]	Byte	FCCOB Parameter Fields (NVM Command Mode)
000	HI	FCMD[7:0] defining Flash command
	LO	6'h0, Global address [17:16]
001	HI	Global address [15:8]
	LO	Global address [7:0]

Table 31-24. FCCOB - NVM Command Mode (Typical Usage)

CCOBIX[2:0]	Byte	FCCOB Parameter Fields (NVM Command Mode)
010	HI	Data 0 [15:8]
	LO	Data 0 [7:0]
011	HI	Data 1 [15:8]
	LO	Data 1 [7:0]
100	HI	Data 2 [15:8]
	LO	Data 2 [7:0]
101	HI	Data 3 [15:8]
	LO	Data 3 [7:0]

31.3.2.12 Flash Reserved1 Register (FRSV1)

This Flash register is reserved for factory testing.

Offset Module Base + 0x000C

	7	6	5	4	3	2	1	0
R	0	0	0	0	0	0	0	0
W								
Reset	0	0	0	0	0	0	0	0

= Unimplemented or Reserved

Figure 31-18. Flash Reserved1 Register (FRSV1)

All bits in the FRSV1 register read 0 and are not writable.

31.3.2.13 Flash Reserved2 Register (FRSV2)

This Flash register is reserved for factory testing.

Offset Module Base + 0x000D

	7	6	5	4	3	2	1	0
R	0	0	0	0	0	0	0	0
W								
Reset	0	0	0	0	0	0	0	0

= Unimplemented or Reserved

Figure 31-19. Flash Reserved2 Register (FRSV2)

All bits in the FRSV2 register read 0 and are not writable.

31.3.2.14 Flash Reserved3 Register (FRSV3)

This Flash register is reserved for factory testing.

Offset Module Base + 0x000E

	7	6	5	4	3	2	1	0
R	0	0	0	0	0	0	0	0
W								
Reset	0	0	0	0	0	0	0	0

= Unimplemented or Reserved

Figure 31-20. Flash Reserved3 Register (FRSV3)

All bits in the FRSV3 register read 0 and are not writable.

31.3.2.15 Flash Reserved4 Register (FRSV4)

This Flash register is reserved for factory testing.

Offset Module Base + 0x000F

	7	6	5	4	3	2	1	0
R	0	0	0	0	0	0	0	0
W								
Reset	0	0	0	0	0	0	0	0

= Unimplemented or Reserved

Figure 31-21. Flash Reserved4 Register (FRSV4)

All bits in the FRSV4 register read 0 and are not writable.

31.3.2.16 Flash Option Register (FOPT)

The FOPT register is the Flash option register.

Offset Module Base + 0x0010

	7	6	5	4	3	2	1	0
R	NV[7:0]							
W								
Reset	F[1]	F[1]	F[1]	F[1]	F[1]	F[1]	F[1]	F[1]

= Unimplemented or Reserved

Figure 31-22. Flash Option Register (FOPT)

1 Loaded from IFR Flash configuration field, during reset sequence.

All bits in the FOPT register are readable but are not writable.

During the reset sequence, the FOPT register is loaded from the Flash nonvolatile byte in the Flash configuration field at global address 0x3_FF0E located in P-Flash memory (see Table 31-4) as indicated by reset condition F in Figure 31-22. If a double bit fault is detected while reading the P-Flash phrase containing the Flash nonvolatile byte during the reset sequence, all bits in the FOPT register will be set.

Table 31-25. FOPT Field Descriptions

Field	Description
7–0 NV[7:0]	**Nonvolatile Bits** — The NV[7:0] bits are available as nonvolatile bits. Refer to the device user guide for proper use of the NV bits.

31.3.2.17 Flash Reserved5 Register (FRSV5)

This Flash register is reserved for factory testing.

Offset Module Base + 0x0011

	7	6	5	4	3	2	1	0
R	0	0	0	0	0	0	0	0
W								
Reset	0	0	0	0	0	0	0	0

= Unimplemented or Reserved

Figure 31-23. Flash Reserved5 Register (FRSV5)

All bits in the FRSV5 register read 0 and are not writable.

31.3.2.18 Flash Reserved6 Register (FRSV6)

This Flash register is reserved for factory testing.

Offset Module Base + 0x0012

	7	6	5	4	3	2	1	0
R	0	0	0	0	0	0	0	0
W								
Reset	0	0	0	0	0	0	0	0

= Unimplemented or Reserved

Figure 31-24. Flash Reserved6 Register (FRSV6)

All bits in the FRSV6 register read 0 and are not writable.

31.3.2.19 Flash Reserved7 Register (FRSV7)

This Flash register is reserved for factory testing.

Offset Module Base + 0x0013

	7	6	5	4	3	2	1	0
R	0	0	0	0	0	0	0	0
W								
Reset	0	0	0	0	0	0	0	0

= Unimplemented or Reserved

Figure 31-25. Flash Reserved7 Register (FRSV7)

All bits in the FRSV7 register read 0 and are not writable.

31.4 Functional Description

31.4.1 Modes of Operation

The FTMRG240K2 module provides the modes of operation normal and special . The operating mode is determined by module-level inputs and affects the FCLKDIV, FCNFG, and EEPROT registers (see Table 31-27).

31.4.2 IFR Version ID Word

The version ID word is stored in the IFR at address 0x0_40B6. The contents of the word are defined in Table 31-26.

Table 31-26. IFR Version ID Fields

[15:4]	[3:0]
Reserved	VERNUM

- VERNUM: Version number. The first version is number 0b_0001 with both 0b_0000 and 0b_1111 meaning ‘none’.

31.4.3 Internal NVM resource (NVMRES)

IFR is an internal NVM resource readable by CPU , when NVMRES is active. The IFR fields are shown in Table 31-5.

The NVMRES global address map is shown in Table 31-6.

For FTMRG240K2 the NVMRES address area is shared with 16K space of P-Flash area, as shown in Figure 31-2.

31.4.4 Flash Command Operations

Flash command operations are used to modify Flash memory contents.

The next sections describe:

- How to write the FCLKDIV register that is used to generate a time base (FCLK) derived from BUSCLK for Flash program and erase command operations
- The command write sequence used to set Flash command parameters and launch execution
- Valid Flash commands available for execution, according to MCU functional mode and MCU security state.

31.4.4.1 Writing the FCLKDIV Register

Prior to issuing any Flash program or erase command after a reset, the user is required to write the FCLKDIV register to divide BUSCLK down to a target FCLK of 1 MHz. Table 31-8 shows recommended values for the FDIV field based on BUSCLK frequency.

NOTE

Programming or erasing the Flash memory cannot be performed if the bus clock runs at less than 0.8 MHz. Setting FDIV too high can destroy the Flash memory due to overstress. Setting FDIV too low can result in incomplete programming or erasure of the Flash memory cells.

When the FCLKDIV register is written, the FDIVLD bit is set automatically. If the FDIVLD bit is 0, the FCLKDIV register has not been written since the last reset. If the FCLKDIV register has not been written, any Flash program or erase command loaded during a command write sequence will not execute and the ACCERR bit in the FSTAT register will set.

31.4.4.2 Command Write Sequence

The Memory Controller will launch all valid Flash commands entered using a command write sequence.

Before launching a command, the ACCERR and FPVIOL bits in the FSTAT register must be clear (see Section 31.3.2.7) and the CCIF flag should be tested to determine the status of the current command write

sequence. If CCIF is 0, the previous command write sequence is still active, a new command write sequence cannot be started, and all writes to the FCCOB register are ignored.

31.4.4.2.1 Define FCCOB Contents

The FCCOB parameter fields must be loaded with all required parameters for the Flash command being executed. Access to the FCCOB parameter fields is controlled via the CCOBIX bits in the FCCOBIX register (see Section 31.3.2.3).

The contents of the FCCOB parameter fields are transferred to the Memory Controller when the user clears the CCIF command completion flag in the FSTAT register (writing 1 clears the CCIF to 0). The CCIF flag will remain clear until the Flash command has completed. Upon completion, the Memory Controller will return CCIF to 1 and the FCCOB register will be used to communicate any results. The flow for a generic command write sequence is shown in Figure 31-26.

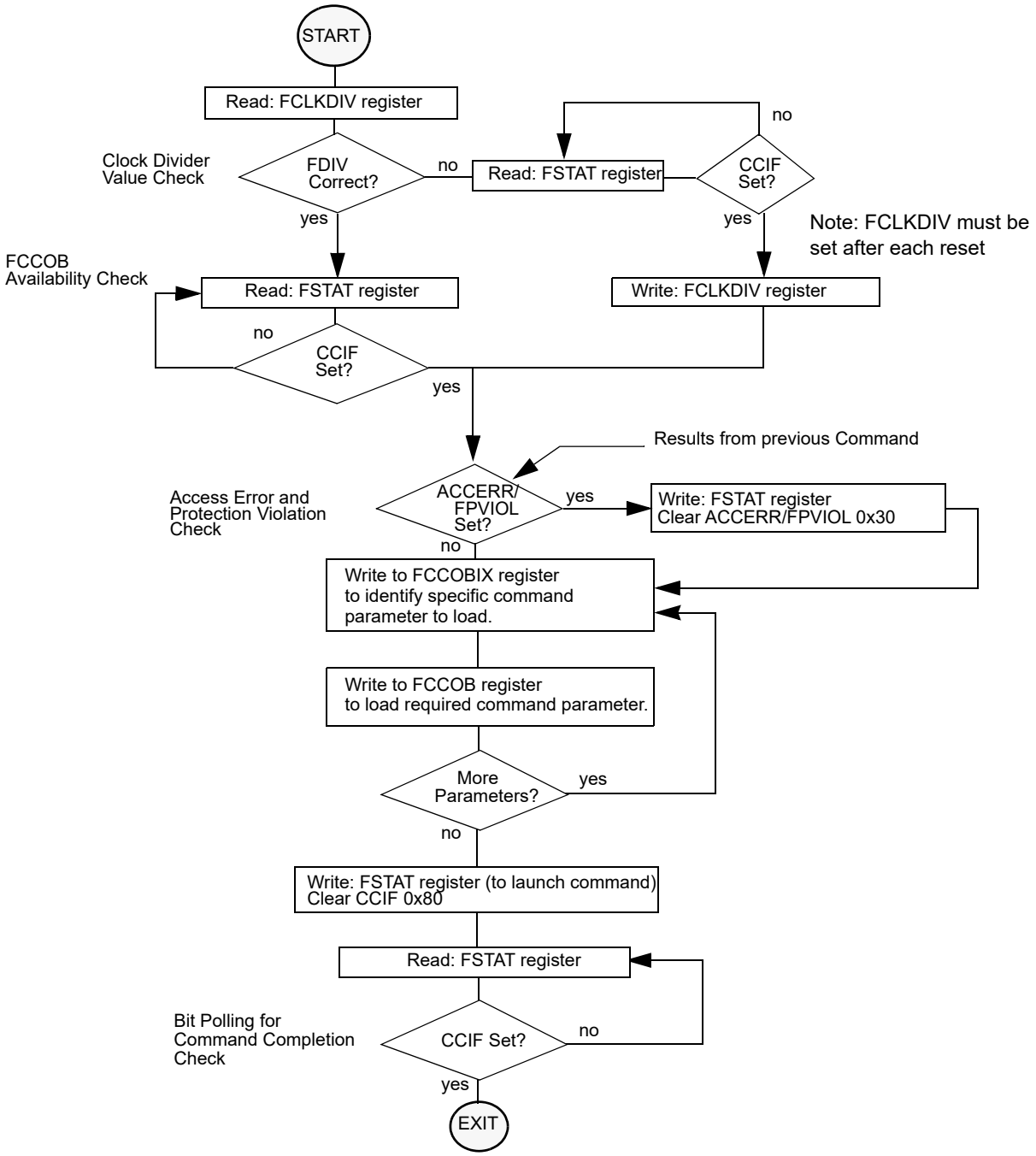

Figure 31-26. Generic Flash Command Write Sequence Flowchart

31.4.4.3 Valid Flash Module Commands

Table 31-27 present the valid Flash commands, as enabled by the combination of the functional MCU mode (Normal SingleChip NS, Special Singlechip SS) with the MCU security state (Unsecured, Secured).

Special Singlechip mode is selected by input mmc_ss_mode_ts2 asserted. MCU Secured state is selected by input mmc_secure input asserted.

Table 31-27. Flash Commands by Mode and Security State

FCMD	Command	Unsecured		Secured	
		NS[1]	SS[2]	NS[3]	SS[4]
0x01	Erase Verify All Blocks	*	*	*	*
0x02	Erase Verify Block	*	*	*	*
0x03	Erase Verify P-Flash Section	*	*	*	
0x04	Read Once	*	*	*	
0x06	Program P-Flash	*	*	*	
0x07	Program Once	*	*	*	
0x08	Erase All Blocks		*		*
0x09	Erase Flash Block	*	*	*	
0x0A	Erase P-Flash Sector	*	*	*	
0x0B	Unsecure Flash		*		*
0x0C	Verify Backdoor Access Key	*		*	
0x0D	Set User Margin Level	*	*	*	
0x0E	Set Field Margin Level		*		
0x10	Erase Verify EEPROM Section	*	*	*	
0x11	Program EEPROM	*	*	*	
0x12	Erase EEPROM Sector	*	*	*	

1 Unsecured Normal Single Chip mode
2 Unsecured Special Single Chip mode.
3 Secured Normal Single Chip mode.
4 Secured Special Single Chip mode.

31.4.4.4 P-Flash Commands

Table 31-28 summarizes the valid P-Flash commands along with the effects of the commands on the P-Flash block and other resources within the Flash module.

Table 31-28. P-Flash Commands

FCMD	Command	Function on P-Flash Memory
0x01	Erase Verify All Blocks	Verify that all P-Flash (and EEPROM) blocks are erased.

Table 31-28. P-Flash Commands

FCMD	Command	Function on P-Flash Memory
0x02	Erase Verify Block	Verify that a P-Flash block is erased.
0x03	Erase Verify P-Flash Section	Verify that a given number of words starting at the address provided are erased.
0x04	Read Once	Read a dedicated 64 byte field in the nonvolatile information register in P-Flash block that was previously programmed using the Program Once command.
0x06	Program P-Flash	Program a phrase in a P-Flash block.
0x07	Program Once	Program a dedicated 64 byte field in the nonvolatile information register in P-Flash block that is allowed to be programmed only once.
0x08	Erase All Blocks	Erase all P-Flash (and EEPROM) blocks. An erase of all Flash blocks is only possible when the FPLDIS, FPHDIS, and FPOPEN bits in the FPROT register and the DPOPEN bit in the EEPROT register are set prior to launching the command.
0x09	Erase Flash Block	Erase a P-Flash (or EEPROM) block. An erase of the full P-Flash block is only possible when FPLDIS, FPHDIS and FPOPEN bits in the FPROT register are set prior to launching the command.
0x0A	Erase P-Flash Sector	Erase all bytes in a P-Flash sector.
0x0B	Unsecure Flash	Supports a method of releasing MCU security by erasing all P-Flash (and EEPROM) blocks and verifying that all P-Flash (and EEPROM) blocks are erased.
0x0C	Verify Backdoor Access Key	Supports a method of releasing MCU security by verifying a set of security keys.
0x0D	Set User Margin Level	Specifies a user margin read level for all P-Flash blocks.
0x0E	Set Field Margin Level	Specifies a field margin read level for all P-Flash blocks (special modes only).

31.4.4.5 EEPROM Commands

Table 31-29 summarizes the valid EEPROM commands along with the effects of the commands on the EEPROM block.

Table 31-29. EEPROM Commands

FCMD	Command	Function on EEPROM Memory
0x01	Erase Verify All Blocks	Verify that all EEPROM (and P-Flash) blocks are erased.
0x02	Erase Verify Block	Verify that the EEPROM block is erased.

Table 31-29. EEPROM Commands

FCMD	Command	Function on EEPROM Memory
0x08	Erase All Blocks	Erase all EEPROM (and P-Flash) blocks. An erase of all Flash blocks is only possible when the FPLDIS, FPHDIS, and FPOPEN bits in the FPROT register and the DPOPEN bit in the EEPROT register are set prior to launching the command.
0x09	Erase Flash Block	Erase a EEPROM (or P-Flash) block. An erase of the full EEPROM block is only possible when DPOPEN bit in the EEPROT register is set prior to launching the command.
0x0B	Unsecure Flash	Supports a method of releasing MCU security by erasing all EEPROM (and P-Flash) blocks and verifying that all EEPROM (and P-Flash) blocks are erased.
0x0D	Set User Margin Level	Specifies a user margin read level for the EEPROM block.
0x0E	Set Field Margin Level	Specifies a field margin read level for the EEPROM block (special modes only).
0x10	Erase Verify EEPROM Section	Verify that a given number of words starting at the address provided are erased.
0x11	Program EEPROM	Program up to four words in the EEPROM block.
0x12	Erase EEPROM Sector	Erase all bytes in a sector of the EEPROM block.

31.4.5 Allowed Simultaneous P-Flash and EEPROM Operations

Only the operations marked ‘OK’ in Table 31-30 are permitted to be run simultaneously on the Program Flash and EEPROM blocks. Some operations cannot be executed simultaneously because certain hardware resources are shared by the two memories. The priority has been placed on permitting Program Flash reads while program and erase operations execute on the EEPROM, providing read (P-Flash) while write (EEPROM) functionality.

Table 31-30. Allowed P-Flash and EEPROM Simultaneous Operations

	EEPROM				
Program Flash	**Read**	**Margin Read[1]**	**Program**	**Sector Erase**	**Mass Erase[2]**
Read		OK	OK	OK	
Margin Read[1]					
Program					
Sector Erase					
Mass Erase[2]					OK

1 A ‘Margin Read’ is any read after executing the margin setting commands ‘Set User Margin Level’ or ‘Set Field Margin Level’ with anything but the ‘normal’ level specified. See the Note on margin settings in Section 31.4.6.12 and Section 31.4.6.13.

2 The ‘Mass Erase’ operations are commands ‘Erase All Blocks’ and ‘Erase Flash Block’

31.4.6 Flash Command Description

This section provides details of all available Flash commands launched by a command write sequence. The ACCERR bit in the FSTAT register will be set during the command write sequence if any of the following illegal steps are performed, causing the command not to be processed by the Memory Controller:

- Starting any command write sequence that programs or erases Flash memory before initializing the FCLKDIV register
- Writing an invalid command as part of the command write sequence
- For additional possible errors, refer to the error handling table provided for each command

If a Flash block is read during execution of an algorithm (CCIF = 0) on that same block, the read operation will return invalid data if both flags SFDIF and DFDIF are set. If the SFDIF or DFDIF flags were not previously set when the invalid read operation occurred, both the SFDIF and DFDIF flags will be set.

If the ACCERR or FPVIOL bits are set in the FSTAT register, the user must clear these bits before starting any command write sequence (see Section 31.3.2.7).

CAUTION

A Flash word or phrase must be in the erased state before being programmed. Cumulative programming of bits within a Flash word or phrase is not allowed.

31.4.6.1 Erase Verify All Blocks Command

The Erase Verify All Blocks command will verify that all P-Flash and EEPROM blocks have been erased.

Table 31-31. Erase Verify All Blocks Command FCCOB Requirements

CCOBIX[2:0]	FCCOB Parameters	
000	0x01	Not required

Upon clearing CCIF to launch the Erase Verify All Blocks command, the Memory Controller will verify that the entire Flash memory space is erased. The CCIF flag will set after the Erase Verify All Blocks operation has completed. If all blocks are not erased, it means blank check failed, both MGSTAT bits will be set.

Table 31-32. Erase Verify All Blocks Command Error Handling

Register	Error Bit	Error Condition
FSTAT	ACCERR	Set if CCOBIX[2:0] != 000 at command launch
	FPVIOL	None
	MGSTAT1	Set if any errors have been encountered during the reador if blank check failed .
	MGSTAT0	Set if any non-correctable errors have been encountered during the read or if blank check failed.

31.4.6.2 Erase Verify Block Command

The Erase Verify Block command allows the user to verify that an entire P-Flash or EEPROM block has been erased. The FCCOB FlashBlockSelectionCode[1:0]bits determine which block must be verified.

Table 31-33. Erase Verify Block Command FCCOB Requirements

CCOBIX[2:0]	FCCOB Parameters	
000	0x02	Flash block selection code [1:0]. See Table 31-34

Table 31-34. Flash block selection code description

Selection code[1:0]	Flash block to be verified
00	EEPROM
01	P-Flash
10	P-Flash
11	P-Flash

Upon clearing CCIF to launch the Erase Verify Block command, the Memory Controller will verify that the selected P-Flash or EEPROM block is erased. The CCIF flag will set after the Erase Verify Block operation has completed.If the block is not erased, it means blank check failed, both MGSTAT bits will be set.

Table 31-35. Erase Verify Block Command Error Handling

Register	Error Bit	Error Condition
FSTAT	ACCERR	Set if CCOBIX[2:0] != 000 at command launch.
	FPVIOL	None.
	MGSTAT1	Set if any errors have been encountered during the read or if blank check failed.
	MGSTAT0	Set if any non-correctable errors have been encountered during the read[1] or if blank check failed.

31.4.6.3 Erase Verify P-Flash Section Command

The Erase Verify P-Flash Section command will verify that a section of code in the P-Flash memory is erased. The Erase Verify P-Flash Section command defines the starting point of the code to be verified and the number of phrases.

Table 31-36. Erase Verify P-Flash Section Command FCCOB Requirements

CCOBIX[2:0]	FCCOB Parameters	
000	0x03	Global address [17:16] of a P-Flash block
001	Global address [15:0] of the first phrase to be verified	
010	Number of phrases to be verified	

Upon clearing CCIF to launch the Erase Verify P-Flash Section command, the Memory Controller will verify the selected section of Flash memory is erased. The CCIF flag will set after the Erase Verify P-Flash Section operation has completed. If the section is not erased, it means blank check failed, both MGSTAT bits will be set.

Table 31-37. Erase Verify P-Flash Section Command Error Handling

Register	Error Bit	Error Condition
FSTAT	ACCERR	Set if CCOBIX[2:0] != 010 at command launch
		Set if command not available in current mode (see Table 31-27)
		Set if an invalid global address [17:0] is supplied see Table 31-3)
		Set if a misaligned phrase address is supplied (global address [2:0] != 000)
		Set if the requested section crosses a the P-Flash address boundary
	FPVIOL	None
	MGSTAT1	Set if any errors have been encountered during the read or if blank check failed.
	MGSTAT0	Set if any non-correctable errors have been encountered during the read or if blank check failed.

31.4.6.4 Read Once Command

The Read Once command provides read access to a reserved 64 byte field (8 phrases) located in the nonvolatile information register of P-Flash. The Read Once field is programmed using the Program Once command described in Section 31.4.6.6. The Read Once command must not be executed from the Flash block containing the Program Once reserved field to avoid code runaway.

Table 31-38. Read Once Command FCCOB Requirements

CCOBIX[2:0]	FCCOB Parameters	
000	0x04	Not Required
001	Read Once phrase index (0x0000 - 0x0007)	
010	Read Once word 0 value	
011	Read Once word 1 value	
100	Read Once word 2 value	
101	Read Once word 3 value	

Upon clearing CCIF to launch the Read Once command, a Read Once phrase is fetched and stored in the FCCOB indexed register. The CCIF flag will set after the Read Once operation has completed. Valid phrase index values for the Read Once command range from 0x0000 to 0x0007. During execution of the Read Once command, any attempt to read addresses within P-Flash block will return invalid data.

Table 31-39. Read Once Command Error Handling

Register	Error Bit	Error Condition
FSTAT	ACCERR	Set if CCOBIX[2:0] != 001 at command launch
		Set if command not available in current mode (see Table 31-27)
		Set if an invalid phrase index is supplied
	FPVIOL	None
	MGSTAT1	Set if any errors have been encountered during the read
	MGSTAT0	Set if any non-correctable errors have been encountered during the read

31.4.6.5 Program P-Flash Command

The Program P-Flash operation will program a previously erased phrase in the P-Flash memory using an embedded algorithm.

CAUTION

A P-Flash phrase must be in the erased state before being programmed. Cumulative programming of bits within a Flash phrase is not allowed.

Table 31-40. Program P-Flash Command FCCOB Requirements

CCOBIX[2:0]	FCCOB Parameters	
000	0x06	Global address [17:16] to identify P-Flash block
001	Global address [15:0] of phrase location to be programmed[1]	
010	Word 0 program value	
011	Word 1 program value	
100	Word 2 program value	
101	Word 3 program value	

1 Global address [2:0] must be 000

Upon clearing CCIF to launch the Program P-Flash command, the Memory Controller will program the data words to the supplied global address and will then proceed to verify the data words read back as expected. The CCIF flag will set after the Program P-Flash operation has completed.

Table 31-41. Program P-Flash Command Error Handling

Register	Error Bit	Error Condition
FSTAT	ACCERR	Set if CCOBIX[2:0] != 101 at command launch
		Set if command not available in current mode (see Table 31-27)
		Set if an invalid global address [17:0] is supplied see Table 31-3)
		Set if a misaligned phrase address is supplied (global address [2:0] != 000)
	FPVIOL	Set if the global address [17:0] points to a protected area
	MGSTAT1	Set if any errors have been encountered during the verify operation
	MGSTAT0	Set if any non-correctable errors have been encountered during the verify operation

31.4.6.6 Program Once Command

The Program Once command restricts programming to a reserved 64 byte field (8 phrases) in the nonvolatile information register located in P-Flash. The Program Once reserved field can be read using the Read Once command as described in Section 31.4.6.4. The Program Once command must only be issued once since the nonvolatile information register in P-Flash cannot be erased. The Program Once command must not be executed from the Flash block containing the Program Once reserved field to avoid code runaway.

Table 31-42. Program Once Command FCCOB Requirements

CCOBIX[2:0]	FCCOB Parameters	
000	0x07	Not Required
001	Program Once phrase index (0x0000 - 0x0007)	
010	Program Once word 0 value	
011	Program Once word 1 value	
100	Program Once word 2 value	
101	Program Once word 3 value	

Upon clearing CCIF to launch the Program Once command, the Memory Controller first verifies that the selected phrase is erased. If erased, then the selected phrase will be programmed and then verified with read back. The CCIF flag will remain clear, setting only after the Program Once operation has completed.

The reserved nonvolatile information register accessed by the Program Once command cannot be erased and any attempt to program one of these phrases a second time will not be allowed. Valid phrase index values for the Program Once command range from 0x0000 to 0x0007. During execution of the Program Once command, any attempt to read addresses within P-Flash will return invalid data.

Table 31-43. Program Once Command Error Handling

Register	Error Bit	Error Condition
FSTAT	ACCERR	Set if CCOBIX[2:0] != 101 at command launch
		Set if command not available in current mode (see Table 31-27)
		Set if an invalid phrase index is supplied
		Set if the requested phrase has already been programmed[1]
	FPVIOL	None
	MGSTAT1	Set if any errors have been encountered during the verify operation
	MGSTAT0	Set if any non-correctable errors have been encountered during the verify operation

1 If a Program Once phrase is initially programmed to 0xFFFF_FFFF_FFFF_FFFF, the Program Once command will be allowed to execute again on that same phrase.

31.4.6.7 Erase All Blocks Command

The Erase All Blocks operation will erase the entire P-Flash and EEPROM memory space.

Table 31-44. Erase All Blocks Command FCCOB Requirements

CCOBIX[2:0]	FCCOB Parameters	
000	0x08	Not required

Upon clearing CCIF to launch the Erase All Blocks command, the Memory Controller will erase the entire Flash memory space and verify that it is erased. If the Memory Controller verifies that the entire Flash memory space was properly erased, security will be released. During the execution of this command (CCIF=0) the user must not write to any Flash module register. The CCIF flag will set after the Erase All Blocks operation has completed.

Table 31-45. Erase All Blocks Command Error Handling

Register	Error Bit	Error Condition
FSTAT	ACCERR	Set if CCOBIX[2:0] != 000 at command launch
		Set if command not available in current mode (see Table 31-27)
	FPVIOL	Set if any area of the P-Flash or EEPROM memory is protected
	MGSTAT1	Set if any errors have been encountered during the verify operation
	MGSTAT0	Set if any non-correctable errors have been encountered during the verify operation

31.4.6.8 Erase Flash Block Command

The Erase Flash Block operation will erase all addresses in a P-Flash or EEPROM block.

Table 31-46. Erase Flash Block Command FCCOB Requirements

CCOBIX[2:0]	FCCOB Parameters	
000	0x09	Global address [17:16] to identify Flash block
001	Global address [15:0] in Flash block to be erased	

Upon clearing CCIF to launch the Erase Flash Block command, the Memory Controller will erase the selected Flash block and verify that it is erased. The CCIF flag will set after the Erase Flash Block operation has completed.

Table 31-47. Erase Flash Block Command Error Handling

Register	Error Bit	Error Condition
FSTAT	ACCERR	Set if CCOBIX[2:0] != 001 at command launch
		Set if command not available in current mode (see Table 31-27)
		Set if an invalid global address [17:16] is supplied
		Set if the supplied P-Flash address is not phrase-aligned or if the EEPROM address is not word-aligned
	FPVIOL	Set if an area of the selected Flash block is protected
	MGSTAT1	Set if any errors have been encountered during the verify operation
	MGSTAT0	Set if any non-correctable errors have been encountered during the verify operation

31.4.6.9 Erase P-Flash Sector Command

The Erase P-Flash Sector operation will erase all addresses in a P-Flash sector.

Table 31-48. Erase P-Flash Sector Command FCCOB Requirements

CCOBIX[2:0]	FCCOB Parameters	
000	0x0A	Global address [17:16] to identify P-Flash block to be erased
001	Global address [15:0] anywhere within the sector to be erased. Refer to Section 31.1.2.1 for the P-Flash sector size.	

Upon clearing CCIF to launch the Erase P-Flash Sector command, the Memory Controller will erase the selected Flash sector and then verify that it is erased. The CCIF flag will be set after the Erase P-Flash Sector operation has completed.

Table 31-49. Erase P-Flash Sector Command Error Handling

Register	Error Bit	Error Condition
FSTAT	ACCERR	Set if CCOBIX[2:0] != 001 at command launch
		Set if command not available in current mode (see Table 31-27)
		Set if an invalid global address [17:16] is supplied see Table 31-3)
		Set if a misaligned phrase address is supplied (global address [2:0] != 000)
	FPVIOL	Set if the selected P-Flash sector is protected
	MGSTAT1	Set if any errors have been encountered during the verify operation
	MGSTAT0	Set if any non-correctable errors have been encountered during the verify operation

31.4.6.10 Unsecure Flash Command

The Unsecure Flash command will erase the entire P-Flash and EEPROM memory space and, if the erase is successful, will release security.

Table 31-50. Unsecure Flash Command FCCOB Requirements

CCOBIX[2:0]	FCCOB Parameters	
000	0x0B	Not required

Upon clearing CCIF to launch the Unsecure Flash command, the Memory Controller will erase the entire P-Flash and EEPROM memory space and verify that it is erased. If the Memory Controller verifies that the entire Flash memory space was properly erased, security will be released. If the erase verify is not successful, the Unsecure Flash operation sets MGSTAT1 and terminates without changing the security state. During the execution of this command (CCIF=0) the user must not write to any Flash module register. The CCIF flag is set after the Unsecure Flash operation has completed.

Table 31-51. Unsecure Flash Command Error Handling

Register	Error Bit	Error Condition
FSTAT	ACCERR	Set if CCOBIX[2:0] != 000 at command launch
		Set if command not available in current mode (see Table 31-27)
	FPVIOL	Set if any area of the P-Flash or EEPROM memory is protected
	MGSTAT1	Set if any errors have been encountered during the verify operation
	MGSTAT0	Set if any non-correctable errors have been encountered during the verify operation

31.4.6.11 Verify Backdoor Access Key Command

The Verify Backdoor Access Key command will only execute if it is enabled by the KEYEN bits in the FSEC register (see Table 31-10). The Verify Backdoor Access Key command releases security if user-supplied keys match those stored in the Flash security bytes of the Flash configuration field (see

Table 31-4). The Verify Backdoor Access Key command must not be executed from the Flash block containing the backdoor comparison key to avoid code runaway.

Table 31-52. Verify Backdoor Access Key Command FCCOB Requirements

CCOBIX[2:0]	FCCOB Parameters	
000	0x0C	Not required
001	Key 0	
010	Key 1	
011	Key 2	
100	Key 3	

Upon clearing CCIF to launch the Verify Backdoor Access Key command, the Memory Controller will check the FSEC KEYEN bits to verify that this command is enabled. If not enabled, the Memory Controller sets the ACCERR bit in the FSTAT register and terminates. If the command is enabled, the Memory Controller compares the key provided in FCCOB to the backdoor comparison key in the Flash configuration field with Key 0 compared to 0x3_FF00, etc. If the backdoor keys match, security will be released. If the backdoor keys do not match, security is not released and all future attempts to execute the Verify Backdoor Access Key command are aborted (set ACCERR) until a reset occurs. The CCIF flag is set after the Verify Backdoor Access Key operation has completed.

Table 31-53. Verify Backdoor Access Key Command Error Handling

Register	Error Bit	Error Condition
FSTAT	ACCERR	Set if CCOBIX[2:0] != 100 at command launch
		Set if an incorrect backdoor key is supplied
		Set if backdoor key access has not been enabled (KEYEN[1:0] != 10, see Section 31.3.2.2)
		Set if the backdoor key has mismatched since the last reset
	FPVIOL	None
	MGSTAT1	None
	MGSTAT0	None

31.4.6.12 Set User Margin Level Command

The Set User Margin Level command causes the Memory Controller to set the margin level for future read operations of the P-Flash or EEPROM block.

Table 31-54. Set User Margin Level Command FCCOB Requirements

CCOBIX[2:0]	FCCOB Parameters	
000	0x0D	Flash block selection code [1:0]. See Table 31-34
001	Margin level setting.	

Upon clearing CCIF to launch the Set User Margin Level command, the Memory Controller will set the user margin level for the targeted block and then set the CCIF flag.

NOTE

When the EEPROM block is targeted, the EEPROM user margin levels are applied only to the EEPROM reads. However, when the P-Flash block is targeted, the P-Flash user margin levels are applied to both P-Flash and EEPROM reads. It is not possible to apply user margin levels to the P-Flash block only.

Valid margin level settings for the Set User Margin Level command are defined in Table 31-55.

Table 31-55. Valid Set User Margin Level Settings

CCOB (CCOBIX=001)	Level Description
0x0000	Return to Normal Level
0x0001	User Margin-1 Level[1]
0x0002	User Margin-0 Level[2]

[1] Read margin to the erased state

[2] Read margin to the programmed state

Table 31-56. Set User Margin Level Command Error Handling

Register	Error Bit	Error Condition
FSTAT	ACCERR	Set if CCOBIX[2:0] != 001 at command launch.
		Set if command not available in current mode (see Table 31-27).
		Set if an invalid margin level setting is supplied.
	FPVIOL	None
	MGSTAT1	None
	MGSTAT0	None

NOTE

User margin levels can be used to check that Flash memory contents have adequate margin for normal level read operations. If unexpected results are encountered when checking Flash memory contents at user margin levels, a potential loss of information has been detected.

31.4.6.13 Set Field Margin Level Command

The Set Field Margin Level command, valid in special modes only, causes the Memory Controller to set the margin level specified for future read operations of the P-Flash or EEPROM block.

Table 31-57. Set Field Margin Level Command FCCOB Requirements

CCOBIX[2:0]	FCCOB Parameters	
000	0x0E	Flash block selection code [1:0]. See Table 31-34
001	Margin level setting.	

Upon clearing CCIF to launch the Set Field Margin Level command, the Memory Controller will set the field margin level for the targeted block and then set the CCIF flag.

NOTE

When the EEPROM block is targeted, the EEPROM field margin levels are applied only to the EEPROM reads. However, when the P-Flash block is targeted, the P-Flash field margin levels are applied to both P-Flash and EEPROM reads. It is not possible to apply field margin levels to the P-Flash block only.

Valid margin level settings for the Set Field Margin Level command are defined in Table 31-58.

Table 31-58. Valid Set Field Margin Level Settings

CCOB (CCOBIX=001)	Level Description
0x0000	Return to Normal Level
0x0001	User Margin-1 Level[1]
0x0002	User Margin-0 Level[2]
0x0003	Field Margin-1 Level[1]
0x0004	Field Margin-0 Level[2]

1 Read margin to the erased state

2 Read margin to the programmed state

Table 31-59. Set Field Margin Level Command Error Handling

Register	Error Bit	Error Condition
FSTAT	ACCERR	Set if CCOBIX[2:0] != 001 at command launch.
		Set if command not available in current mode (see Table 31-27).
		Set if an invalid margin level setting is supplied.
	FPVIOL	None
	MGSTAT1	None
	MGSTAT0	None

CAUTION

Field margin levels must only be used during verify of the initial factory programming.

NOTE

Field margin levels can be used to check that Flash memory contents have adequate margin for data retention at the normal level setting. If unexpected results are encountered when checking Flash memory contents at field margin levels, the Flash memory contents should be erased and reprogrammed.

31.4.6.14 Erase Verify EEPROM Section Command

The Erase Verify EEPROM Section command will verify that a section of code in the EEPROM is erased. The Erase Verify EEPROM Section command defines the starting point of the data to be verified and the number of words.

Table 31-60. Erase Verify EEPROM Section Command FCCOB Requirements

CCOBIX[2:0]	FCCOB Parameters	
000	0x10	Global address [17:16] to identify the EEPROM block
001	Global address [15:0] of the first word to be verified	
010	Number of words to be verified	

Upon clearing CCIF to launch the Erase Verify EEPROM Section command, the Memory Controller will verify the selected section of EEPROM memory is erased. The CCIF flag will set after the Erase Verify EEPROM Section operation has completed. If the section is not erased, it means blank check failed, both MGSTAT bits will be set.

Table 31-61. Erase Verify EEPROM Section Command Error Handling

Register	Error Bit	Error Condition
FSTAT	ACCERR	Set if CCOBIX[2:0] != 010 at command launch
		Set if command not available in current mode (see Table 31-27)
		Set if an invalid global address [17:0] is supplied
		Set if a misaligned word address is supplied (global address [0] != 0)
		Set if the requested section breaches the end of the EEPROM block
	FPVIOL	None
	MGSTAT1	Set if any errors have been encountered during the read or if blank check failed.
	MGSTAT0	Set if any non-correctable errors have been encountered during the read or if blank check failed.

31.4.6.15 Program EEPROM Command

The Program EEPROM operation programs one to four previously erased words in the EEPROM block. The Program EEPROM operation will confirm that the targeted location(s) were successfully programmed upon completion.

CAUTION

A Flash word must be in the erased state before being programmed. Cumulative programming of bits within a Flash word is not allowed.

Table 31-62. Program EEPROM Command FCCOB Requirements

CCOBIX[2:0]	FCCOB Parameters	
000	0x11	Global address [17:16] to identify the EEPROM block
001	Global address [15:0] of word to be programmed	
010	Word 0 program value	
011	Word 1 program value, if desired	
100	Word 2 program value, if desired	
101	Word 3 program value, if desired	

Upon clearing CCIF to launch the Program EEPROM command, the user-supplied words will be transferred to the Memory Controller and be programmed if the area is unprotected. The CCOBIX index value at Program EEPROM command launch determines how many words will be programmed in the EEPROM block. The CCIF flag is set when the operation has completed.

Table 31-63. Program EEPROM Command Error Handling

Register	Error Bit	Error Condition
FSTAT	ACCERR	Set if CCOBIX[2:0] < 010 at command launch
		Set if CCOBIX[2:0] > 101 at command launch
		Set if command not available in current mode (see Table 31-27)
		Set if an invalid global address [17:0] is supplied
		Set if a misaligned word address is supplied (global address [0] != 0)
		Set if the requested group of words breaches the end of the EEPROM block
	FPVIOL	Set if the selected area of the EEPROM memory is protected
	MGSTAT1	Set if any errors have been encountered during the verify operation
	MGSTAT0	Set if any non-correctable errors have been encountered during the verify operation

31.4.6.16 Erase EEPROM Sector Command

The Erase EEPROM Sector operation will erase all addresses in a sector of the EEPROM block.

Table 31-64. Erase EEPROM Sector Command FCCOB Requirements

CCOBIX[2:0]	FCCOB Parameters	
000	0x12	Global address [17:16] to identify EEPROM block
001	Global address [15:0] anywhere within the sector to be erased. See Section 31.1.2.2 for EEPROM sector size.	

Upon clearing CCIF to launch the Erase EEPROM Sector command, the Memory Controller will erase the selected Flash sector and verify that it is erased. The CCIF flag will set after the Erase EEPROM Sector operation has completed.

Table 31-65. Erase EEPROM Sector Command Error Handling

Register	Error Bit	Error Condition
FSTAT	ACCERR	Set if CCOBIX[2:0] != 001 at command launch
		Set if command not available in current mode (see Table 31-27)
		Set if an invalid global address [17:0] is suppliedsee Table 31-3)
		Set if a misaligned word address is supplied (global address [0] != 0)
	FPVIOL	Set if the selected area of the EEPROM memory is protected
	MGSTAT1	Set if any errors have been encountered during the verify operation
	MGSTAT0	Set if any non-correctable errors have been encountered during the verify operation

31.4.7 Interrupts

The Flash module can generate an interrupt when a Flash command operation has completed or when a Flash command operation has detected an ECC fault.

Table 31-66. Flash Interrupt Sources

Interrupt Source	Interrupt Flag	Local Enable	Global (CCR) Mask
Flash Command Complete	CCIF (FSTAT register)	CCIE (FCNFG register)	I Bit
ECC Double Bit Fault on Flash Read	DFDIF (FERSTAT register)	DFDIE (FERCNFG register)	I Bit
ECC Single Bit Fault on Flash Read	SFDIF (FERSTAT register)	SFDIE (FERCNFG register)	I Bit

NOTE

Vector addresses and their relative interrupt priority are determined at the MCU level.

31.4.7.1 Description of Flash Interrupt Operation

The Flash module uses the CCIF flag in combination with the CCIE interrupt enable bit to generate the Flash command interrupt request. The Flash module uses the DFDIF and SFDIF flags in combination with the DFDIE and SFDIE interrupt enable bits to generate the Flash error interrupt request. For a detailed description of the register bits involved, refer to Section 31.3.2.5, “Flash Configuration Register (FCNFG)”, Section 31.3.2.6, “Flash Error Configuration Register (FERCNFG)”, Section 31.3.2.7, “Flash Status Register (FSTAT)”, and Section 31.3.2.8, “Flash Error Status Register (FERSTAT)”.

The logic used for generating the Flash module interrupts is shown in Figure 31-27.

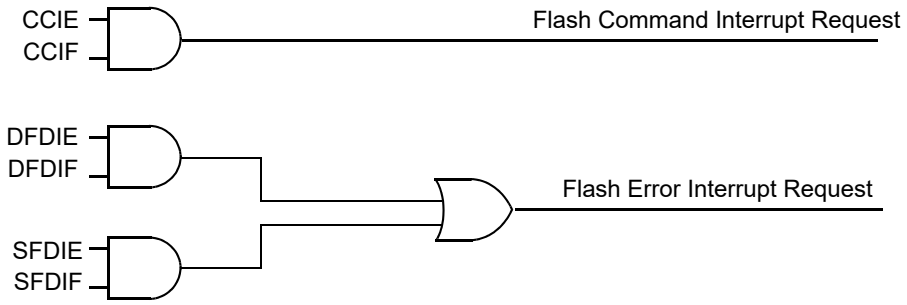

Figure 31-27. Flash Module Interrupts Implementation

31.4.8 Wait Mode

The Flash module is not affected if the MCU enters wait mode. The Flash module can recover the MCU from wait via the CCIF interrupt (see Section 31.4.7, “Interrupts”).

31.4.9 Stop Mode

If a Flash command is active (CCIF = 0) when the MCU requests stop mode, the current Flash operation will be completed before the MCU is allowed to enter stop mode.

31.5 Security

The Flash module provides security information to the MCU. The Flash security state is defined by the SEC bits of the FSEC register (see Table 31-11). During reset, the Flash module initializes the FSEC register using data read from the security byte of the Flash configuration field at global address 0x3_FF0F. The security state out of reset can be permanently changed by programming the security byte assuming that the MCU is starting from a mode where the necessary P-Flash erase and program commands are available and that the upper region of the P-Flash is unprotected. If the Flash security byte is successfully programmed, its new value will take affect after the next MCU reset.

The following subsections describe these security-related subjects:

- Unsecuring the MCU using Backdoor Key Access
- Unsecuring the MCU in Special Single Chip Mode using BDM
- Mode and Security Effects on Flash Command Availability

31.5.1 Unsecuring the MCU using Backdoor Key Access

The MCU may be unsecured by using the backdoor key access feature which requires knowledge of the contents of the backdoor keys (four 16-bit words programmed at addresses 0x3_FF00-0x3_FF07). If the KEYEN[1:0] bits are in the enabled state (see Section 31.3.2.2), the Verify Backdoor Access Key command (see Section 31.4.6.11) allows the user to present four prospective keys for comparison to the keys stored in the Flash memory via the Memory Controller. If the keys presented in the Verify Backdoor Access Key command match the backdoor keys stored in the Flash memory, the SEC bits in the FSEC register (see Table 31-11) will be changed to unsecure the MCU. Key values of 0x0000 and 0xFFFF are not permitted as backdoor keys. While the Verify Backdoor Access Key command is active, P-Flash memory and EEPROM memory will not be available for read access and will return invalid data.

The user code stored in the P-Flash memory must have a method of receiving the backdoor keys from an external stimulus. This external stimulus would typically be through one of the on-chip serial ports.

If the KEYEN[1:0] bits are in the enabled state (see Section 31.3.2.2), the MCU can be unsecured by the backdoor key access sequence described below:

1. Follow the command sequence for the Verify Backdoor Access Key command as explained in Section 31.4.6.11
2. If the Verify Backdoor Access Key command is successful, the MCU is unsecured and the SEC[1:0] bits in the FSEC register are forced to the unsecure state of 10

The Verify Backdoor Access Key command is monitored by the Memory Controller and an illegal key will prohibit future use of the Verify Backdoor Access Key command. A reset of the MCU is the only method to re-enable the Verify Backdoor Access Key command. The security as defined in the Flash security byte (0x3_FF0F) is not changed by using the Verify Backdoor Access Key command sequence. The backdoor keys stored in addresses 0x3_FF00-0x3_FF07 are unaffected by the Verify Backdoor Access Key command sequence. The Verify Backdoor Access Key command sequence has no effect on the program and erase protections defined in the Flash protection register, FPROT.

After the backdoor keys have been correctly matched, the MCU will be unsecured. After the MCU is unsecured, the sector containing the Flash security byte can be erased and the Flash security byte can be

reprogrammed to the unsecure state, if desired. In the unsecure state, the user has full control of the contents of the backdoor keys by programming addresses 0x3_FF00-0x3_FF07 in the Flash configuration field.

31.5.2 Unsecuring the MCU in Special Single Chip Mode using BDM

A secured MCU can be unsecured in special single chip mode by using the following method to erase the P-Flash and EEPROM memory:

1. Reset the MCU into special single chip mode
2. Delay while the BDM executes the Erase Verify All Blocks command write sequence to check if the P-Flash and EEPROM memories are erased
3. Send BDM commands to disable protection in the P-Flash and EEPROM memory
4. Execute the Erase All Blocks command write sequence to erase the P-Flash and EEPROM memory. Alternatively the Unsecure Flash command can be executed, if so the steps 5 and 6 below are skeeped.
5. After the CCIF flag sets to indicate that the Erase All Blocks operation has completed, reset the MCU into special single chip mode
6. Delay while the BDM executes the Erase Verify All Blocks command write sequence to verify that the P-Flash and EEPROM memory are erased

If the P-Flash and EEPROM memory are verified as erased, the MCU will be unsecured. All BDM commands will now be enabled and the Flash security byte may be programmed to the unsecure state by continuing with the following steps:

7. Send BDM commands to execute the Program P-Flash command write sequence to program the Flash security byte to the unsecured state
8. Reset the MCU

31.5.3 Mode and Security Effects on Flash Command Availability

The availability of Flash module commands depends on the MCU operating mode and security state as shown in Table 31-27.

31.6 Initialization

On each system reset the flash module executes an initialization sequence which establishes initial values for the Flash Block Configuration Parameters, the FPROT and EEPROT protection registers, and the FOPT and FSEC registers. The initialization routine reverts to built-in default values that leave the module in a fully protected and secured state if errors are encountered during execution of the reset sequence. If a double bit fault is detected during the reset sequence, both MGSTAT bits in the FSTAT register will be set.

CCIF is cleared throughout the initialization sequence. The Flash module holds off all CPU access for a portion of the initialization sequence. Flash reads are allowed once the hold is removed. Completion of the initialization sequence is marked by setting CCIF high which enables user commands.

If a reset occurs while any Flash command is in progress, that command will be immediately aborted. The state of the word being programmed or the sector/block being erased is not guaranteed.

Appendix A
Electrical Characteristics

Revision History

Version Number	Revision Date	Description of Changes
Rev 0.43	22-Nov-2012	• Updated Table A-4 (temperature option W) • Added Table A-7 • Added Table A-9 • Updated Table A-18 (Num 4, 8) • Updated Table A-19 (Num 4) • Added Table A-23Added Table A-25Added Table A-27Added Table A-29Added Table A-33
Rev 0.44	2-Dec-2012	• Updated Table A-1 (Num 1) • Updated Table A-4 (added parameter T_{Jmax}) • Updated Table A-7 (Num 6, conditions) • Updated Table A-9 (Num 6, conditions) • Updated Table A-10 (conditions) • Added Table A-17 • Updated Table A-18 (Num 8) • Updated Table A-20 (conditions) • Updated Table A-21 (conditions) • Updated Table A-23 (all rows, conditions) • Updated Table A-25 (all rows, conditions) • Updated Table A-27 (all rows, conditions) • Updated Table A-33 (conditions) • Updated Table A-34 (conditions) • Updated Table A-51 (conditions) • Updated Table A-52 (conditions) • Updated Table A-53 (conditions)
Rev 0.45	9-Jan-2013	• Updated Table A-1 (Num 9, 10) • Updated Table A-4 (removed paramerer T_{Jmax}) • Added Table A-11 • Updated Table A-17 (Num 1-3) • Updated Table A-18 (Num 4) • Updated Table A-19 (Num 1) • Added Table A-46 • Updated Table A-49 (all rows, conditions)
Rev 0.46	24-Jan-2013	• Updated Table A-17 (Num 1-3) • Updated Table A-18 (Num 4, 8) • Added Table A-49 (Num 1-3)
Rev 0.47	25-Jan-2013	• Updated Table A-30 (Num 5, 6) • Added Table A-43
Rev 0.48	2-Apr-2013	• Corrected Table A-4 (T_J, temperature option V)

Version Number	Revision Date	Description of Changes
Rev 0.49	5-Jun-2013	• Updated Section A.1.1, “Parameter Classification” • Applied new M-parameter tag in Table A-7, Table A-9, Table A-11, Table A-17, Table A-23, Table A-25, Table A-27, Table A-29, Table A-33, Table A-44, Table A-46, and Table A-49 • Updated Table A-40 (Num 2b, 6b)
Rev 0.50	15-Jul-2013	• Updated Section A.7, “NVM” (format and timing parameters)
Rev 0.51	23-Oct-2017	• Updated mask set condition in Table A-45 (Num 7a, 7b, 8a, 8b) • Updated mask set condition in Table A-46 (Num 7a, 7b, 8a, 8b)
Rev 0.52	22-Jun-2020	• Added Table A-14 (GPIO Configuration for Full Stop and Pseudo Stop Current Measurement) • Updated Table A-18 and Table A-19 (conditions header)

A.1 General

This supplement contains the most accurate electrical information for the MC9S12G microcontroller available at the time of publication.

This introduction is intended to give an overview on several common topics like power supply, current injection etc.

A.1.1 Parameter Classification

The electrical parameters shown in this supplement are guaranteed by various methods. To give the customer a better understanding the following classification is used and the parameters are tagged accordingly in the tables where appropriate.

NOTE

This classification is shown in the column labeled “C” in the parameter tables where appropriate.

P: Those parameters are guaranteed during production testing on each individual device.

M: These parameters are characterized at 160°C and tested in production at an ambient temperature of 150°C with appropriate guardbanding to guarantee operation at 160°C.

C: Those parameters are achieved by the design characterization by measuring a statistically relevant sample size across process variations.

T: Those parameters are achieved by design characterization on a small sample size from typical devices under typical conditions unless otherwise noted. All values shown in the typical column are within this category.

D: Those parameters are derived mainly from simulations.

A.1.2 Power Supply

The VDDA, VSSA pin pairs supply the A/D converter and parts of the internal voltage regulator.

The VDDX, VSSX pin pairs [3:1] supply the I/O pins.

VDDR supplies the internal voltage regulator.

The VDDF, VSS1 pin pair supplies the internal NVM logic.

All VDDX pins are internally connected by metal.

All VSSX pins are internally connected by metal.

VDDA, VDDX and VSSA, VSSX are connected by diodes for ESD protection.

NOTE

In the following context V_{DD35} is used for either VDDA, VDDR, and VDDX; V_{SS35} is used for either VSSA and VSSX unless otherwise noted.

I_{DD35} denotes the sum of the currents flowing into the VDDA, VDDX and VDDR pins.

A.1.3 Pins

There are four groups of functional pins.

A.1.3.1 I/O Pins

The I/O pins have a level in the range of 3.13V to 5.5V. This class of pins is comprised of all port I/O pins, the analog inputs, BKGD and the $\overline{\text{RESET}}$ pins. Some functionality may be disabled.

A.1.3.2 Analog Reference

This group consists of the VRH pin.

A.1.3.3 Oscillator

The pins EXTAL, XTAL dedicated to the oscillator have a nominal 1.8V level.

A.1.3.4 TEST

This pin is used for production testing only. The TEST pin must be tied to ground in all applications.

A.1.4 Current Injection

Power supply must maintain regulation within operating V_{DD35} or V_{DD} range during instantaneous and operating maximum current conditions. If positive injection current ($V_{in} > V_{DD35}$) is greater than I_{DD35}, the injection current may flow out of V_{DD35} and could result in external power supply going out of regulation. Ensure external V_{DD35} load will shunt current greater than maximum injection current. This will be the greatest risk when the MCU is not consuming power; e.g., if no system clock is present, or if clock rate is very low which would reduce overall power consumption.

A.1.5 Absolute Maximum Ratings

Absolute maximum ratings are stress ratings only. A functional operation under or outside those maxima is not guaranteed. Stress beyond those limits may affect the reliability or cause permanent damage of the device.

This device contains circuitry protecting against damage due to high static voltage or electrical fields; however, it is advised that normal precautions be taken to avoid application of any voltages higher than maximum-rated voltages to this high-impedance circuit. Reliability of operation is enhanced if unused inputs are tied to an appropriate logic voltage level (e.g., either V_{SS35} or V_{DD35}).

Table A-1. Absolute Maximum Ratings[1]

Num	Rating	Symbol	Min	Max	Unit
1	I/O, regulator and analog supply voltage	V_{DD35}	–0.3	6.0	V
2	Voltage difference V_{DDX} to V_{DDA}	Δ_{VDDX}	–6.0	0.3	V
3	Voltage difference V_{SSX} to V_{SSA}	Δ_{VSSX}	–0.3	0.3	V
4	Digital I/O input voltage	V_{IN}	–0.3	6.0	V
5	Analog reference	V_{RH}	–0.3	6.0	V
6	EXTAL, XTAL	V_{ILV}	–0.3	2.16	V
7	Instantaneous maximum current Single pin limit for all digital I/O pins[2]	I_D	–25	+25	mA
8	Instantaneous maximum current Single pin limit for EXTAL, XTAL	I_{DL}	–25	+25	mA
9	Maximum current Single pin limit for power supply pins	I_{DV}	–60	+60	mA
10	Storage temperature range	T_{stg}	–65	155	°C

1 Beyond absolute maximum ratings device might be damaged.

2 All digital I/O pins are internally clamped to V_{SSX} and V_{DDX}, or V_{SSA} and V_{DDA}.

A.1.6 ESD Protection and Latch-up Immunity

All ESD testing is in conformity with CDF-AEC-Q100 stress test qualification for automotive grade integrated circuits. During the device qualification ESD stresses were performed for the Human Body Model (HBM) and the Charge Device Model.

A device will be defined as a failure if after exposure to ESD pulses the device no longer meets the device specification. Complete DC parametric and functional testing is performed per the applicable device specification at room temperature followed by hot temperature, unless specified otherwise in the device specification.

Table A-2. ESD and Latch-up Test Conditions

Model	Description	Symbol	Value	Unit
Human Body	Series Resistance	R1	1500	Ω
	Storage Capacitance	C	100	pF
	Number of Pulse per pin positive negative	-	- 3 3	

Table A-3. ESD and Latch-Up Protection Characteristics

Num	C	Rating	Symbol	Min	Max	Unit
1	C	Human Body Model (HBM)	V_{HBM}	2000	-	V
2	C	Charge Device Model (CDM)	V_{CDM}	500	-	V
3	C	Charge Device Model (CDM) (Corner Pins)	V_{CDM}	750	-	V
4	C	Latch-up Current at 125°C positive negative	I_{LAT}	 +100 -100	-	mA
5	C	Latch-up Current at 27°C positive negative	I_{LAT}	 +200 -200	-	mA

A.1.7 Operating Conditions

This section describes the operating conditions of the device. Unless otherwise noted those conditions apply to all the following data.

NOTE

Please refer to the temperature rating of the device (C, V, M, W) with regards to the ambient temperature T_A and the junction temperature T_J. For power dissipation calculations refer to Section A.1.8, “Power Dissipation and Thermal Characteristics”.

Table A-4. Operating Conditions

Rating	Symbol	Min	Typ	Max	Unit
I/O, regulator and analog supply voltage	V_{DD35}	3.13	5	5.5	V
Oscillator	f_{osc}	4	—	16	MHz
Bus frequency	f_{bus}	0.5	—	25	MHz
Temperature Option C Operating ambient temperature range[1] Operating junction temperature range	 T_A T_J	 –40 –40	 27 —	 85 105	°C

Table A-4. Operating Conditions

Rating	Symbol	Min	Typ	Max	Unit
Temperature Option V Operating ambient temperature range[1] Operating junction temperature range	 T_A T_J	 –40 –40	 27 —	 105 125	°C
Temperature Option M Operating ambient temperature range[1] Operating junction temperature range	 T_A T_J	 –40 –40	 27 —	 125 150	°C
Temperature Option W Operating ambient temperature range[1] Operating junction temperature range	 T_A T_J	 –40 –40	 27 —	 150 160	°C

[1] Please refer to Section A.1.8, “Power Dissipation and Thermal Characteristics” for more details about the relation between ambient temperature T_A and device junction temperature T_J.

NOTE

Operation is guaranteed when powering down until low voltage reset assertion.

A.1.8 Power Dissipation and Thermal Characteristics

Power dissipation and thermal characteristics are closely related. The user must assure that the maximum operating junction temperature is not exceeded. The average chip-junction temperature (T_J) in °C can be obtained from:

$$T_J = T_A + (P_D \bullet \Theta_{JA})$$

T_J = Junction Temperature, [°C]

T_A = Ambient Temperature, [°C]

P_D = Total Chip Power Dissipation, [W]

Θ_{JA} = Package Thermal Resistance, [°C/W]

The total power dissipation can be calculated from:

$$P_D = P_{INT} + P_{IO}$$

P_{INT} = Chip Internal Power Dissipation, [W]

$$P_{IO} = \sum_i R_{DSON} \cdot I_{IO_i}^2$$

P_{IO} is the sum of all output currents on I/O ports associated with V_{DDX}, whereby

$$R_{DSON} = \frac{V_{OL}}{I_{OL}}; \text{for outputs driven low}$$

$$R_{DSON} = \frac{V_{DD35} - V_{OH}}{I_{OH}}; \text{for outputs driven high}$$

$$P_{INT} = I_{DDR} \cdot V_{DDR} + I_{DDA} \cdot V_{DDA}$$

Table A-5. Thermal Package Characteristics[1]

Num	C	Rating	Symbol	S12GN32, S12GNA32, S12GN16, S12GNA16	S12G64, S12GA64, S12G48, S12GN48, S12GA64	S12G128, S12GA128, S12G96, S12GA96	S12G240, S12GA240, S12G192, S12GA192	Unit
20-pin TSSOP								
1	D	Thermal resistance single sided PCB, natural convection[2]	θ_{JA}	91				°C/W
2	D	Thermal resistance single sided PCB @ 200 ft/min[3]	θ_{JMA}	72				°C/W
3	D	Thermal resistance double sided PCB with 2 internal planes, natural convection[3]	θ_{JA}	58				°C/W
4	D	Thermal resistance double sided PCB with 2 internal planes @ 200 ft/min[3]	θ_{JMA}	51				°C/W
5	D	Junction to Board[4]	θ_{JB}	29				°C/W
6	D	Junction to Case[5]	θ_{JC}	20				°C/W
7	D	Junction to Package Top[6]	Ψ_{JT}	4				°C/W
32-pin LQFP								
8	D	Thermal resistance single sided PCB, natural convection[2]	θ_{JA}	81	84			°C/W
9	D	Thermal resistance single sided PCB @ 200 ft/min[3]	θ_{JMA}	68	70			°C/W
10	D	Thermal resistance double sided PCB with 2 internal planes, natural convection[3]	θ_{JA}	57	56			°C/W
11	D	Thermal resistance double sided PCB with 2 internal planes @ 200 ft/min[3]	θ_{JMA}	50	49			°C/W
12	D	Junction to Board[4]	θ_{JB}	35	32			°C/W
13	D	Junction to Case[5]	θ_{JC}	25	23			°C/W
14	D	Junction to Package Top[6]	Ψ_{JT}	8	6			°C/W
48-pin LQFP								
15	D	Thermal resistance single sided PCB, natural convection[2]	θ_{JA}	81	80	79	75	°C/W
16	D	Thermal resistance single sided PCB @ 200 ft/min[3]	θ_{JMA}	68	67	66	62	°C/W
17	D	Thermal resistance double sided PCB with 2 internal planes, natural convection[3]	θ_{JA}	57	56	56	51	°C/W
18	D	Thermal resistance double sided PCB with 2 internal planes @ 200 ft/min[3]	θ_{JMA}	50	50	49	45	°C/W
19	D	Junction to Board[4]	θ_{JB}	35	34	33	30	°C/W
20	D	Junction to Case[5]	θ_{JC}	25	24	21	19	°C/W
21	D	Junction to Package Top[6]	Ψ_{JT}	8	6	4	N/A	°C/W

Table A-5. Thermal Package Characteristics[1]

Num	C	Rating	Symbol	S12GN32, S12GNA32, S12GN16, S12GNA16	S12G64, S12GA64, S12G48, S12GN48, S12GA64	S12G128, S12GA128, S12G96, S12GA96	S12G240, S12GA240, S12G192, S12GA192	Unit
48-pin QFN								
22	D	Thermal resistance single sided PCB, natural convection[2]	θ_{JA}	82				°C/W
23	D	Thermal resistance single sided PCB @ 200 ft/min[3]	θ_{JMA}	67				°C/W
24	D	Thermal resistance double sided PCB with 2 internal planes, natural convection[3]	θ_{JA}	28				°C/W
25	D	Thermal resistance double sided PCB with 2 internal planes @ 200 ft/min[3]	θ_{JMA}	23				°C/W
26	D	Junction to Board[4]	θ_{JB}	11				°C/W
27	D	Junction to Case[5]	θ_{JC}	N/A				°C/W
28	D	Junction to Package Top[6]	Ψ_{JT}	4				°C/W
64-pin LQFP								
29	D	Thermal resistance single sided PCB, natural convection[2]	θ_{JA}		70	70	70	°C/W
30	D	Thermal resistance single sided PCB @ 200 ft/min[3]	θ_{JMA}		59	58	58	°C/W
31	D	Thermal resistance double sided PCB with 2 internal planes, natural convection[3]	θ_{JA}		52	52	52	°C/W
32	D	Thermal resistance double sided PCB with 2 internal planes @ 200 ft/min[3]	θ_{JMA}		46	46	45	°C/W
33	D	Junction to Board[4]	θ_{JB}		34	34	35	°C/W
34	D	Junction to Case[5]	θ_{JC}		20	18	17	°C/W
35	D	Junction to Package Top[6]	Ψ_{JT}		5	4	N/A	°C/W
100-pin LQFP								
36	D	Thermal resistance single sided PCB, natural convection[2]	θ_{JA}			61	62	°C/W
37	D	Thermal resistance single sided PCB @ 200 ft/min[3]	θ_{JMA}			51	55	°C/W
38	D	Thermal resistance double sided PCB with 2 internal planes, natural convection[3]	θ_{JA}			49	51	°C/W
39	D	Thermal resistance double sided PCB with 2 internal planes @ 200 ft/min[3]	θ_{JMA}			43	47	°C/W
40	D	Junction to Board[4]	θ_{JB}			34	37	°C/W
41	D	Junction to Case[5]	θ_{JC}			16	17	°C/W
42	D	Junction to Package Top[6]	Ψ_{JT}			3	N/A	°C/W

1 The values for thermal resistance are achieved by package simulations

2 Per JEDEC JESD51-2 with the single layer board (JESD51-3) horizontal.J

3 Per JEDEC JESD51-6 with the board (JESD51-7) horizontal.

4 .Thermal resistance between the die and the printed circuit board per JEDEC JESD51-8. Board temperature is measured in simulation on the top surface of the board near the package.

5 Thermal resistance between the die and the case top surface as measured in simulation by the cold plate method (MIL SPEC-883 Method 1012.1).

6 Thermal characterization parameter indicating the temperature difference between package top and the junction temperature per JEDEC JESD51-2. Ψ_{JT} is a useful value to use to estimate junction temperature in a steady state customer enviroment.

A.2 I/O Characteristics

This section describes the characteristics of all I/O pins except EXTAL, XTAL, TEST, and supply pins.

Table A-6. 3.3-V I/O Characteristics (Junction Temperature From –40°C To +150°C)

Conditions are 3.15 V < V_{DD35} < 3.6 V junction temperature from –40°C to +150°C, unless otherwise noted I/O Characteristics for all I/O pins except EXTAL, XTAL,TEST and supply pins.							
Num	**C**	**Rating**	**Symbol**	**Min**	**Typ**	**Max**	**Unit**
1	P	Input high voltage	V_{IH}	0.65*V_{DD35}	—	—	V
2	T	Input high voltage	V_{IH}	—	—	V_{DD35}+0.3	V
3	P	Input low voltage	V_{IL}	—	—	0.35*V_{DD35}	V
4	T	Input low voltage	V_{IL}	V_{SS35} – 0.3	—	—	V
5	C	Input hysteresis	V_{HYS}	0.06*V_{DD35}	—	0.3*V_{DD35}	mV
6	P	Input leakage current (pins in high impedance input mode)[1] V_{in} = V_{DD35} or V_{SS35} +125°C to < T_J < 150°C +105°C to < T_J < 125° –40°C to < T_J < 105°C	I_{in}	 -1 -0.5 -0.4	 — — —	 1 0.5 0.4	µA
7	P	Output high voltage (pins in output mode) I_{OH} = –1.75 mA	V_{OH}	V_{DD35}-0.4	—	—	V
8	C	Output low voltage (pins in output mode) I_{OL} = +1.75 mA	V_{OL}	—	—	0.4	V
9	P	Internal pull up device current V_{IH} min > input voltage > V_{IL} max	I_{PUL}	-1	—	–70	µA
10	P	Internal pull down device current V_{IH} min > input voltage > V_{IL} max	I_{PDH}	1	—	70	µA
11	D	Input capacitance	C_{in}	—	7	—	pF
12	T	Injection current[2] Single pin limit Total device limit, sum of all injected currents	 I_{ICS} I_{ICP}	 –2.5 –25	—	 2.5 25	mA

1 Maximum leakage current occurs at maximum operating temperature. Current decreases by approximately one-half for each 8°°C to 12°C° in the temperature range from 50°C to 125°C.

2 Refer to Section A.1.4, “Current Injection” for more details

Table A-7. 3.3-V I/O Characteristics (Junction Temperature From +150°C To +160°C)

Conditions are 3.15 V < V_{DD35} < 3.6 V junction temperature from +150°C to +160°C, unless otherwise noted
I/O Characteristics for all I/O pins except EXTAL, XTAL,TEST and supply pins.

Num	C	Rating	Symbol	Min	Typ	Max	Unit
1	M	Input high voltage	V_{IH}	0.65*V_{DD35}	—	—	V
2	T	Input high voltage	V_{IH}	—	—	V_{DD35}+0.3	V
3	M	Input low voltage	V_{IL}	—	—	0.35*V_{DD35}	V
4	T	Input low voltage	V_{IL}	V_{SS35} – 0.3	—	—	V
5	C	Input hysteresis	V_{HYS}	0.06*V_{DD35}	—	0.3*V_{DD35}	mV
6	M	Input leakage current (pins in high impedance input mode)[1] V_{in} = V_{DD35} or V_{SS35}	I_{in}	-1	—	1	µA
7	P	Output high voltage (pins in output mode) I_{OH} = –1.75 mA	V_{OH}	V_{DD35}-0.4	—	—	V
8	C	Output low voltage (pins in output mode) I_{OL} = +1.75 mA	V_{OL}	—	—	0.4	V
9	M	Internal pull up device current V_{IH} min > input voltage > V_{IL} max	I_{PUL}	-1	—	–70	µA
10	M	Internal pull down device current V_{IH} min > input voltage > V_{IL} max	I_{PDH}	1	—	70	µA
11	D	Input capacitance	C_{in}	—	7	—	pF
12	T	Injection current[2] Single pin limit Total device limit, sum of all injected currents	 I_{ICS} I_{ICP}	 –2.5 –25	—	 2.5 25	mA

1 Maximum leakage current occurs at maximum operating temperature. Current decreases by approximately one-half for each 8°°C to 12°C° in the temperature range from 50°C to 125°C.

2 Refer to Section A.1.4, “Current Injection” for more details

Table A-8. 5-V I/O Characteristics (Junction Temperature From –40°C To +150°C)

Conditions are 4.5 V < V_{DD35} < 5.5 V junction temperature from –40°C to +150°C, unless otherwise noted I/O Characteristics for all I/O pins except EXTAL, XTAL,TEST and supply pins.							
Num	**C**	**Rating**	**Symbol**	**Min**	**Typ**	**Max**	**Unit**
1	P	Input high voltage	V_{IH}	0.65*V_{DD35}	—	—	V
2	T	Input high voltage	V_{IH}	—	—	V_{DD35}+0.3	V
3	P	Input low voltage	V_{IL}	—	—	0.35*V_{DD35}	V
4	T	Input low voltage	V_{IL}	V_{SSRX}–0.3	—	—	V
5	C	Input hysteresis	V_{HYS}	0.06*V_{DD35}	—	0.3*V_{DD35}	mV
6	P	Input leakage current (pins in high impedance input mode)[1] V_{in} = V_{DD35} or V_{SS35} +125°C to < T_J < 150°C +105°C to < T_J < 125° –40°C to < T_J < 105°C	I_{in}	 -1 -0.5 -0.4	 — — —	 1 0.5 0.4	µA
7	P	Output high voltage (pins in output mode) I_{OH} = –4 mA	V_{OH}	V_{DD35} – 0.8	—	—	V
8	P	Output low voltage (pins in output mode) I_{OL} = +4mA	V_{OL}	—	—	0.8	V
9	P	Internal pull up current V_{IH} min > input voltage > V_{IL} max	I_{PUL}	-10	—	-130	µA
10	P	Internal pull down current V_{IH} min > input voltage > V_{IL} max	I_{PDH}	10	—	130	µA
11	D	Input capacitance	C_{in}	—	7	—	pF
12	T	Injection current[2] Single pin limit Total device Limit, sum of all injected currents	 I_{ICS} I_{ICP}	 –2.5 –25	—	 2.5 25	mA

1 Maximum leakage current occurs at maximum operating temperature. Current decreases by approximately one-half for each 8°°C to 12°C° in the temperature range from 50°C to 125°C.

2 Refer to Section A.1.4, “Current Injection” for more details

Table A-9. 5-V I/O Characteristics (Junction Temperature From +150°C To +160°C)

Conditions are 4.5 V < V_{DD35} < 5.5 V junction temperature from +150°C to +160°C, unless otherwise noted
I/O Characteristics for all I/O pins except EXTAL, XTAL,TEST and supply pins.

Num	C	Rating	Symbol	Min	Typ	Max	Unit
1	M	Input high voltage	V_{IH}	0.65*V_{DD35}	—	—	V
2	T	Input high voltage	V_{IH}	—	—	V_{DD35}+0.3	V
3	M	Input low voltage	V_{IL}	—	—	0.35*V_{DD35}	V
4	T	Input low voltage	V_{IL}	V_{SSRX}–0.3	—	—	V
5	C	Input hysteresis	V_{HYS}	0.06*V_{DD35}	—	0.3*V_{DD35}	mV
6	M	Input leakage current (pins in high impedance input mode)[1] V_{in} = V_{DD35} or V_{SS35}	I_{in}	-1	—	1	µA
7	M	Output high voltage (pins in output mode) I_{OH} = –4 mA	V_{OH}	V_{DD35} – 0.8	—	—	V
8	M	Output low voltage (pins in output mode) I_{OL} = +4mA	V_{OL}	—	—	0.8	V
9	M	Internal pull up current V_{IH} min > input voltage > V_{IL} max	I_{PUL}	-10	—	-130	µA
10	M	Internal pull down current V_{IH} min > input voltage > V_{IL} max	I_{PDH}	10	—	130	µA
11	D	Input capacitance	C_{in}	—	7	—	pF
12	T	Injection current[2] Single pin limit Total device Limit, sum of all injected currents	 I_{ICS} I_{ICP}	 –2.5 –25	—	 2.5 25	mA

1 Maximum leakage current occurs at maximum operating temperature. Current decreases by approximately one-half for each 8°°C to 12°C° in the temperature range from 50°C to 125°C.

2 Refer to Section A.1.4, “Current Injection” for more details

Table A-10. Pin Interrupt Characteristics (Junction Temperature From –40°C To +150°C)

Conditions are 3.13V < V_{DD35} < 5.5 V unless otherwise noted.

Num	C	Rating	Symbol	Min	Typ	Max	Unit
1	P	Port J, P, AD interrupt input pulse filtered (STOP)[1]	t_{P_MASK}	—	—	3	µs
2	P	Port J, P, AD interrupt input pulse passed (STOP)[1]	t_{P_PASS}	10	—	—	µs
3	D	Port J, P, AD interrupt input pulse filtered ($\overline{\text{STOP}}$) in number of bus clock cycles of period 1/f_{bus}	n_{P_MASK}	—	—	3	
4	D	Port J, P, AD interrupt input pulse passed ($\overline{\text{STOP}}$) in number of bus clock cycles of period 1/f_{bus}	n_{P_PASS}	4	—	—	
5	D	$\overline{\text{IRQ}}$ pulse width, edge-sensitive mode ($\overline{\text{STOP}}$) in number of bus clock cycles of period 1/f_{bus}	n_{IRQ}	1	—	—	

1 Parameter only applies in stop or pseudo stop mode.

Table A-11. Pin Interrupt Characteristics (Junction Temperature From +150°C To +160°C)

Conditions are 3.13V < V_{DD35} < 5.5 V unless otherwise noted.							
Num	**C**	**Rating**	**Symbol**	**Min**	**Typ**	**Max**	**Unit**
1	M	Port J, P, AD interrupt input pulse filtered (STOP)[1]	t_{P_MASK}	—	—	3	µs
2	M	Port J, P, AD interrupt input pulse passed (STOP)[1]	t_{P_PASS}	10	—	—	µs
3	D	Port J, P, AD interrupt input pulse filtered ($\overline{STOP}$) in number of bus clock cycles of period $1/f_{bus}$	n_{P_MASK}	—	—	3	
4	D	Port J, P, AD interrupt input pulse passed ($\overline{STOP}$) in number of bus clock cycles of period $1/f_{bus}$	n_{P_PASS}	4	—	—	
5	D	$\overline{IRQ}$ pulse width, edge-sensitive mode ($\overline{STOP}$) in number of bus clock cycles of period $1/f_{bus}$	n_{IRQ}	1	—	—	

1 Parameter only applies in stop or pseudo stop mode.

A.3 Supply Currents

This section describes the current consumption characteristics of the device as well as the conditions for the measurements.

A.3.1 Measurement Conditions

Run current is measured on the VDDX, VDDR[1], and VDDA[2] pins. It does not include the current to drive external loads. Unless otherwise noted the currents are measured in special single chip mode and the CPU code is executed from RAM. For Run and Wait current measurements PLL is on and the reference clock is the IRC1M trimmed to 1MHz. The bus frequency is 25MHz and the CPU frequency is 50MHz. Table A-12., Table A-13. and Table A-15. show the configuration of the CPMU module and the peripherals for Run, Wait and Stop current measurement.

Table A-12. CPMU Configuration for Pseudo Stop Current Measurement

CPMU REGISTER	Bit settings/Conditions
CPMUCLKS	PLLSEL=0, PSTP=1, PRE=PCE=RTIOSCSEL=COPOSCSEL=1

1. On some packages VDDR is bonded to VDDX and the pin is named VDDXR. Refer to Section 1.8, “Device Pinouts” for further details.
2. On some packages VDDA is connected with VDDXR and the common pin is named VDDXRA.On some packages VSSA is connected to VSSX and the common pin is named VSSXA. See section Section 1.8, “Device Pinouts” for further details.

Table A-12. CPMU Configuration for Pseudo Stop Current Measurement

CPMU REGISTER	Bit settings/Conditions
CPMUOSC	OSCE=1, External Square wave on EXTAL f_{EXTAL}=4MHz, V_{IH}= 1.8V, V_{IL}=0V
CPMURTI	RTDEC=0, RTR[6:4]=111, RTR[3:0]=1111;
CPMUCOP	WCOP=1, CR[2:0]=111

Table A-13. CPMU Configuration for Run/Wait and Full Stop Current Measurement

CPMU REGISTER	Bit settings/Conditions
CPMUSYNR	VCOFRQ[1:0]=01,SYNDIV[5:0] = 24
CPMUPOSTDIV	POSTDIV[4:0]=0
CPMUCLKS	PLLSEL=1
CPMUOSC	OSCE=0, Reference clock for PLL is f_{ref}=f_{irc1m} trimmed to 1MHz
API settings for STOP current measurement	
CPMUAPICTL	APIEA=0, APIFE=1, APIE=0
CPMUAPITR	trimmed to 10Khz
CPMUAPIRH/RL	set to $FFFF

Table A-14. GPIO Configuration for Full Stop and Pseudo Stop Current Measurement

PIM REGISTER	Configuration
DDR*x*	All GPIO pins configured as outputs
PUCR/PER*x*	All pull-ups/pull-downs disabled

Table A-15. Peripheral Configurations for Run & Wait Current Measurement

Peripheral	Configuration
MSCAN	Configured to loop-back mode using a bit rate of 1Mbit/s

Table A-15. Peripheral Configurations for Run & Wait Current Measurement

Peripheral	Configuration
SPI	Configured to master mode, continuously transmit data (0x55 or 0xAA) at 1Mbit/s
SCI	Configured into loop mode, continuously transmit data (0x55) at speed of 57600 baud
PWM	Configured to toggle its pins at the rate of 40kHz
ADC	The peripheral is configured to operate at its maximum specified frequency and to continuously convert voltages on all input channels in sequence.
DBG	The module is enabled and the comparators are configured to trigger in outside range.The range covers all the code executed by the core.
TIM	The peripheral shall be configured to output compare mode, pulse accumulator and modulus counter enabled.
COP & RTI	Both modules are enabled.
ACMP[1]	The module is enabled with analog output on. The ACMPP and ACMPM are toggling with 0-1 and 1-0.
DAC[2]	DAC0 and DAC1 is buffered at full voltage range (DACxCTL = $87).
RVA[3]	The module is enabled and ADC is running at 6.25MHz with maximum bus freq

1 Onlly available on S12GN16, S12GN32, S12GN48, S12G48, and S12G64

2 Only available on S12G192, S12GA192, S12G340, and S12GA240

3 Only available on S12GA192 and S12GA240

Table A-16. Run and Wait Current Characteristics (Junction Temperature From –40°C To +150°C)

Conditions are: V_{DDR}=5.5V, T_A=125°C, see Table A-13. and Table A-15.							
Num	**C**	**Rating**	**Symbol**	**Min**	**Typ**	**Max**	**Unit**
S12GN16, S12GN32							
1	P	IDD Run Current (code execution from RAM)	I_{DDRr}		12.5	16	mA
2	C	IDD Run Current (code execution from flash)	I_{DDRf}		13	17	mA
3	P	IDD Wait Current	I_{DDW}		7.2	10	mA
S12GN48, S12G48, S12G64							
4	P	IDD Run Current (code execution from RAM)	I_{DDRr}		14	19	mA
5	C	IDD Run Current (code execution from flash)	I_{DDRf}		15.5	20	mA
6	P	IDD Wait Current	I_{DDW}		8.7	11	mA
S12G96, S12G128							
7	P	IDD Run Current (code execution from RAM)	I_{DDRr}		15	21	mA
8	C	IDD Run Current (code execution from flash)	I_{DDRf}		17	22	mA
9	P	IDD Wait Current	I_{DDW}		9	11.5	mA
S12G192, S12GA192, S12G240, S12GA240							
10	P	IDD Run Current (code execution from RAM)	I_{DDRr}		18	22.5	mA
11	C	IDD Run Current (code execution from flash)	I_{DDRf}		17	23.5	mA
12	P	IDD Wait Current	I_{DDW}		9.5	12	mA

Table A-17. Run and Wait Current Characteristics (Junction Temperature From +150°C To +160°C)

Conditions are: V_{DDR}=5.5V, T_A=150°C, see Table A-13. and Table A-15.							
Num	**C**	**Rating**	**Symbol**	**Min**	**Typ**	**Max**	**Unit**
S12GN16, S12GN32							
1	M	IDD Run Current (code execution from RAM)	I_{DDRr}		12.7		mA
2	C	IDD Run Current (code execution from flash)	I_{DDRf}		13.2		mA
3	M	IDD Wait Current	I_{DDW}		7.4		mA

Table A-18. Full Stop Current Characteristics

Conditions are: Typ: V_{DDX},V_{DDR},V_{DDA}=5V, Max: V_{DDX},V_{DDR},V_{DDA}=5.5V API see Table A-13.and Table A-14.							
Num	**C**	**Rating**	**Symbol**	**Min**	**Typ**	**Max**	**Unit**
S12GN16, S12GN32							
Stop Current API disabled							
1	P	-40°C	I_{DDS}		14.4	24	µA
2	P	25°C	I_{DDS}		16.5	28	µA
3	P	150°C	I_{DDS}		120	320	µA
4	C	160°C	I_{DDS}		140		µA
Stop Current API enabled							
5	C	-40°C	I_{DDS}		18.5		µA
6	C	25°C	I_{DDS}		21.5		µA
7	C	150°C	I_{DDS}		130		µA
8	C	160°C	I_{DDS}		150		µA
S12GN48, S12G48, S12G64							
Stop Current API disabled							
9	P	-40°C	I_{DDS}		16	27	µA
10	P	25°C	I_{DDS}		18.5	30	µA
11	P	150°C	I_{DDS}		140	370	µA
Stop Current API enabled							
12	C	-40°C	I_{DDS}		20		µA
13	C	25°C	I_{DDS}		23.5		µA
14	C	150°C	I_{DDS}		150		µA
S12G96, S12G128							
Stop Current API disabled							
15	P	-40°C	I_{DDS}		16.5	28	µA
16	P	25°C	I_{DDS}		19	32	µA
17	P	150°C	I_{DDS}		150	400	µA
Stop Current API enabled							
18	C	-40°C	I_{DDS}		20.5		µA
19	C	25°C	I_{DDS}		24		µA
20	C	150°C	I_{DDS}		160		µA
S12G192, S12GA192, S12G240, S12GA240							
Stop Current API disabled							
21	P	-40°C	I_{DDS}		17	30	µA
22	P	25°C	I_{DDS}		19.5	34	µA
23	P	150°C	I_{DDS}		155	420	µA
Stop Current API enabled							
24	C	-40°C	I_{DDS}		21		µA
25	C	25°C	I_{DDS}		24.5		µA
26	C	150°C	I_{DDS}		160		µA

Table A-19. Pseudo Stop Current Characteristics

Conditions are: V_{DDX}=5V, V_{DDR}=5V, V_{DDA}=5V, RTI and COP and API enabled, see Table A-12.and Table A-14.							
Num	**C**	**Rating**	**Symbol**	**Min**	**Typ**	**Max**	**Unit**
S12GN16, S12GN32							
1	C	-40°C	I_{DDPS}		155		µA
2	C	25°C	I_{DDPS}		165		µA
3	C	150°C	I_{DDPS}		265		µA
4	C	160°C	I_{DDPS}		295		µA
S12GN48, S12G48, S12G64							
5	C	-40°C	I_{DDPS}		160		µA
6	C	25°C	I_{DDPS}		170		µA
7	C	150°C	I_{DDPS}		285		µA
S12G96, S12G128							
8	C	-40°C	I_{DDPS}		165		µA
9	C	25°C	I_{DDPS}		175		µA
10	C	150°C	I_{DDPS}		320		µA
S12G192, S12GA192, S12G240, S12GA240							
11	C	-40°C	I_{DDPS}		175		µA
12	C	25°C	I_{DDPS}		185		µA
13	C	150°C	I_{DDPS}		430		µA

A.4 ADC Characteristics

This section describes the characteristics of the analog-to-digital converter.

A.4.1 ADC Operating Characteristics

The Table A-20 and Table A-21 show conditions under which the ADC operates.

The following constraints exist to obtain full-scale, full range results:

$$V_{SSA} \le V_{RL} \le V_{IN} \le V_{RH} \le V_{DDA}.$$

This constraint exists since the sample buffer amplifier can not drive beyond the power supply levels that it ties to. If the input level goes outside of this range it will effectively be clipped.

Table A-20. ADC Operating Characteristics

Supply voltage 3.13 V < V_{DDA} < 5.5 V, -40°C < T_J < T_{Jmax}[1]							
Num	**C**	**Rating**	**Symbol**	**Min**	**Typ**	**Max**	**Unit**
1	D	Reference potential Low High	 V_{RL} V_{RH}	 V_{SSA} $V_{DDA}/2$	 — —	 $V_{DDA}/2$ V_{DDA}	 V V
2	D	Voltage difference V_{DDX} to V_{DDA}	Δ_{VDDX}	–2.35	0	0.1	V
3	D	Voltage difference V_{SSX} to V_{SSA}	Δ_{VSSX}	–0.1	0	0.1	V
4	C	Differential reference voltage	V_{RH}-V_{RL}	3.13	5.0	5.5	V
5	C	ADC Clock Frequency (derived from bus clock via the prescaler bus)	f_{ATDCLk}	0.25		8.0	MHz
8	D	ADC Conversion Period[2] 12 bit resolution: 10 bit resolution: 8 bit resolution:	 N_{CONV12} N_{CONV10} N_{CONV8}	 20 19 17		 42 41 39	 ADC clock Cycles

1 see Table A-4

2 The minimum time assumes a sample time of 4 ADC clock cycles. The maximum time assumes a sample time of 24 ADC clock cycles and the discharge feature (SMP_DIS) enabled, which adds 2 ADC clock cycles.

A.4.2 Factors Influencing Accuracy

Source resistance, source capacitance and current injection have an influence on the accuracy of the ADC. A further factor is that port AD pins that are configured as output drivers switching.

A.4.2.1 Differential Reference Voltage

The accuracy is reduced if the differential reference voltage is less than 3.13V when using the ATD in the 3.3V range or if the differential reference voltage is less than 4.5V when using the ATD in the 5V range.

A.4.2.2 Port AD Output Drivers Switching

Port AD output drivers switching can adversely affect the ADC accuracy whilst converting the analog voltage on other port AD pins because the output drivers are supplied from the VDDA/VSSA ADC supply pins. Although internal design measures are implemented to minimize the affect of output driver noise, it is recommended to configure port AD pins as outputs only for low frequency, low load outputs. The impact on ADC accuracy is load dependent and not specified. The values specified are valid under condition that no port AD output drivers switch during conversion.

A.4.2.3 Source Resistance

Due to the input pin leakage current as specified in conjunction with the source resistance there will be a voltage drop from the signal source to the ADC input. The maximum source resistance R_S specifies results

in an error (10-bit resolution) of less than 1/2 LSB (2.5 mV) at the maximum leakage current. If device or operating conditions are less than worst case or leakage-induced error is acceptable, larger values of source resistance of up to 10Kohm are allowed.

A.4.2.4 Source Capacitance

When sampling an additional internal capacitor is switched to the input. This can cause a voltage drop due to charge sharing with the external and the pin capacitance. For a maximum sampling error of the input voltage ≤ 1LSB (10-bit resilution), then the external filter capacitor, $C_f \geq 1024 * (C_{INS}–C_{INN})$.

A.4.2.5 Current Injection

There are two cases to consider.

1. A current is injected into the channel being converted. The channel being stressed has conversion values of $3FF (in 10-bit mode) for analog inputs greater than V_{RH} and $000 for values less than V_{RL} unless the current is higher than specified as disruptive condition.
2. Current is injected into pins in the neighborhood of the channel being converted. A portion of this current is picked up by the channel (coupling ratio K), This additional current impacts the accuracy of the conversion depending on the source resistance.

   The additional input voltage error on the converted channel can be calculated as:

   $$V_{ERR} = K * R_S * I_{INJ}$$

   with I_{INJ} being the sum of the currents injected into the two pins adjacent to the converted channel.

Table A-21. ADC Electrical Characteristics

Supply voltage 3.13 V < V_{DDA} < 5.5 V, -40°C < T_J < T_{Jmax}[1]							
Num	**C**	**Rating**	**Symbol**	**Min**	**Typ**	**Max**	**Unit**
1	C	Max input source resistance[2]	R_S	—	—	1	KΩ
2	D	Total input capacitance Non sampling Total input capacitance Sampling	C_{INN} C_{INS}	— —	— —	10 16	pF
3	D	Input internal Resistance	R_{INA}	-	5	15	kΩ
4	C	Disruptive analog input current	I_{NA}	-2.5	—	2.5	mA
5	C	Coupling ratio positive current injection	K_p	—	—	1E-4	A/A
6	C	Coupling ratio negative current injection	K_n	—	—	5E-3	A/A

1 see Table A-4

2 1 Refer to A.4.2.3 for further information concerning source resistance

A.4.3 ADC Accuracy

Table A-22 and Table A-27 specifies the ADC conversion performance excluding any errors due to current injection, input capacitance and source resistance.

A.4.3.1 ADC Accuracy Definitions

For the following definitions see also Figure A-1.
Differential non-linearity (DNL) is defined as the difference between two adjacent switching steps.

$$DNL(i) = \frac{V_i - V_{i-1}}{1LSB} - 1$$

The integral non-linearity (INL) is defined as the sum of all DNLs:

$$INL(n) = \sum_{i=1}^{n} DNL(i) = \frac{V_n - V_0}{1LSB} - n$$

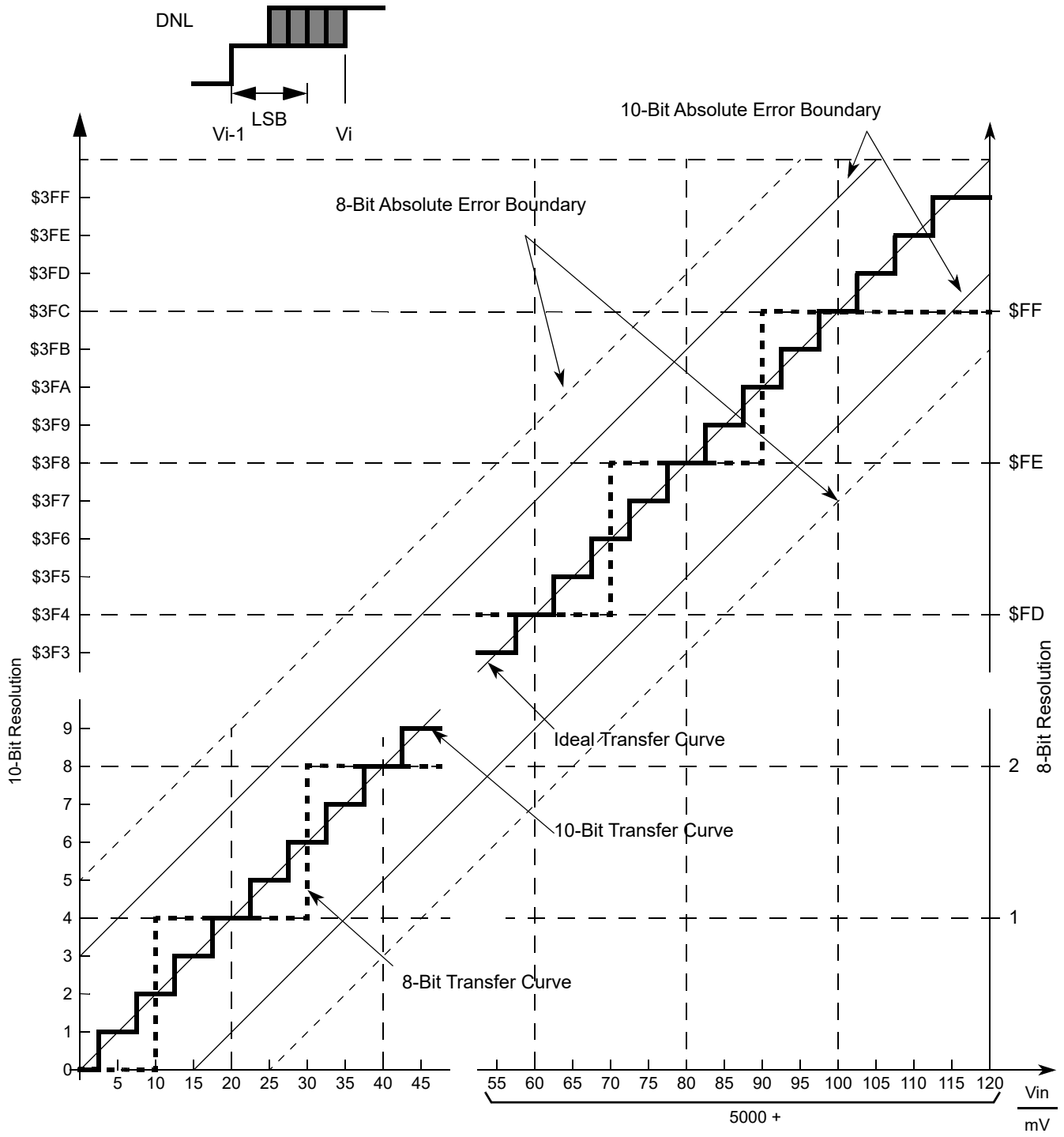

Figure A-1. ADC Accuracy Definitions

NOTE

Figure A-1 shows only definitions, for specification values refer to Table A-22 and Table A-27.

Table A-22. ADC Conversion Performance 5V range (Junction Temperature From –40°C To +150°C)

S12GNA16, S12GNA32, S12GAS48, S12GA64, S12GA96, S12GA128, S12GA192 and S12GA240								
Supply voltage 4.5V < V_{DDA} < 5.5 V, -40°C < T_J < 150°C, V_{REF} = V_{RH} - V_{RL} = V_{DDA}, f_{ADCCLK} = 8.0MHz The values are tested to be valid with no port AD output drivers switching simultaneous with conversions.								
Num	**C**	**Rating**[1]		**Symbol**	**Min**	**Typ**	**Max**	**Unit**
1	P	Resolution	12-Bit	LSB		1.25		mV
2	P	Differential Nonlinearity	12-Bit	DNL	-4	±2	4	counts
3	P	Integral Nonlinearity	12-Bit	INL	-5	±2.5	5	counts
4	P	Absolute Error[2]	12-Bit	AE	-7	±4	7	counts
5	C	Resolution	10-Bit	LSB		5		mV
6	C	Differential Nonlinearity	10-Bit	DNL	-1	±0.5	1	counts
7	C	Integral Nonlinearity	10-Bit	INL	-2	±1	2	counts
8	C	Absolute Error[2]	10-Bit	AE	-3	±2	3	counts
9	C	Resolution	8-Bit	LSB		20		mV
10	C	Differential Nonlinearity	8-Bit	DNL	-0.5	±0.3	0.5	counts
11	C	Integral Nonlinearity	8-Bit	INL	-1	±0.5	1	counts
12	C	Absolute Error[2]	8-Bit	AE	-1.5	±1	1.5	counts

1 The 8-bit and 10-bit mode operation is structurally tested in production test. Absolute values are tested in 12-bit mode.

2 These values include the quantization error which is inherently 1/2 count for any A/D converter.

Table A-23. ADC Conversion Performance 5V range (Junction Temperature From +150°C To +160°C)

S12GNA16, S12GNA32								
Supply voltage 4.5V < V_{DDA} < 5.5 V, +150°C < T_J < 160°C, V_{REF} = V_{RH} - V_{RL} = V_{DDA}, f_{ADCCLK} = 8.0MHz The values are tested to be valid with no port AD output drivers switching simultaneous with conversions.								
Num	**C**	**Rating**[1]		**Symbol**	**Min**	**Typ**	**Max**	**Unit**
1	M	Resolution	12-Bit	LSB		1.25		mV
2	M	Differential Nonlinearity	12-Bit	DNL		±2		counts
3	M	Integral Nonlinearity	12-Bit	INL		±2.5		counts
4	M	Absolute Error[2]	12-Bit	AE		±4		counts
5	C	Resolution	10-Bit	LSB		5		mV
6	C	Differential Nonlinearity	10-Bit	DNL		±0.5		counts
7	C	Integral Nonlinearity	10-Bit	INL		±1		counts
8	C	Absolute Error[2]	10-Bit	AE		±2		counts
9	C	Resolution	8-Bit	LSB		20		mV
10	C	Differential Nonlinearity	8-Bit	DNL		±0.3		counts
11	C	Integral Nonlinearity	8-Bit	INL		±0.5		counts
12	C	Absolute Error[2]	8-Bit	AE		±1		counts

1 The 8-bit and 10-bit mode operation is structurally tested in production test. Absolute values are tested in 12-bit mode.

2 These values include the quantization error which is inherently 1/2 count for any A/D converter.

Table A-24. ADC Conversion Performance 5V range (Junction Temperature From –40°C To +150°C)

S12GN16, S12GN32, S12GN48, S12G48, S12G64, S12G96, S12G128, S12G192, and S12G240								
Supply voltage 4.5V < V_{DDA} < 5.5 V, -40°C < T_J < 150°C, V_{REF} = V_{RH} - V_{RL} = V_{DDA}, f_{ADCCLK} = 8.0MHz The values are tested to be valid with no port AD output drivers switching simultaneous with conversions.								
Num	**C**	**Rating**[1]		**Symbol**	**Min**	**Typ**	**Max**	**Unit**
1	P	Resolution	10-Bit	LSB		5		mV
2	P	Differential Nonlinearity	10-Bit	DNL	-1	±0.5	1	counts
3	P	Integral Nonlinearity	10-Bit	INL	-2	±1	2	counts
4	P	Absolute Error[2]	10-Bit[3] 10-Bit[4]	AE	-3 -4	±2 ±2	3 4	counts
5	C	Resolution	8-Bit	LSB		20		mV
6	C	Differential Nonlinearity	8-Bit	DNL	-0.5	±0.3	0.5	counts
7	C	Integral Nonlinearity	8-Bit	INL	-1	±0.5	1	counts
8	C	Absolute Error[2]	8-Bit	AE	-1.5	±1	1.5	counts

1 The 8-bit mode operation is structurally tested in production test. Absolute values are tested in 10-bit mode.

2 These values include the quantization error which is inherently 1/2 count for any A/D converter.

3 LQFP 48 and bigger

4 LQFP 32 and smaller

Table A-25. ADC Conversion Performance 5V range (Junction Temperature From +150°C To +160°C)

S12GN16, S12GN32								
Supply voltage 4.5V < V_{DDA} < 5.5 V, 150°C < T_J < 160°C, V_{REF} = V_{RH} - V_{RL} = V_{DDA}, f_{ADCCLK} = 8.0MHz The values are tested to be valid with no port AD output drivers switching simultaneous with conversions.								
Num	**C**	**Rating**[1]		**Symbol**	**Min**	**Typ**	**Max**	**Unit**
1	M	Resolution	10-Bit	LSB		5		mV
2	M	Differential Nonlinearity	10-Bit	DNL		±0.5		counts
3	M	Integral Nonlinearity	10-Bit	INL		±1		counts
4	M	Absolute Error[2]	10-Bit[3] 10-Bit[4]	AE		±2 ±2		counts
5	C	Resolution	8-Bit	LSB		20		mV
6	C	Differential Nonlinearity	8-Bit	DNL		±0.3		counts
7	C	Integral Nonlinearity	8-Bit	INL		±0.5		counts
8	C	Absolute Error[2]	8-Bit	AE		±1		counts

1 The 8-bit mode operation is structurally tested in production test. Absolute values are tested in 10-bit mode.

2 These values include the quantization error which is inherently 1/2 count for any A/D converter.

3 LQFP 48 and bigger

4 LQFP 32 and smaller

Table A-26. ADC Conversion Performance 3.3V range (Junction Temperature From –40°C To +150°C)

S12GNA16, S12GNA32, S12GAS48, S12GA64, S12GA96, S12GA128, S12GA192 and S12GA240								
Supply voltage 3.13V < V_{DDA} < 4.5 V, -40°C < T_J < 150°C, V_{REF} = V_{RH} - V_{RL} = V_{DDA}, f_{ADCCLK} = 8.0MHz The values are tested to be valid with no port AD output drivers switching simultaneous with conversions.								
Num	**C**	**Rating**[1]		**Symbol**	**Min**	**Typ**	**Max**	**Unit**
1	P	Resolution	12-Bit	LSB		0.80		mV
2	P	Differential Nonlinearity	12-Bit	DNL	-6	±3	6	counts
3	P	Integral Nonlinearity	12-Bit	INL	-7	±3	7	counts
4	P	Absolute Error[2]	12-Bit	AE	-8	±4	8	counts
5	C	Resolution	10-Bit	LSB		3.22		mV
6	C	Differential Nonlinearity	10-Bit	DNL	-1.5	±1	1.5	counts
7	C	Integral Nonlinearity	10-Bit	INL	-2	±1	2	counts
8	C	Absolute Error[2]	10-Bit	AE	-3	±2	3	counts
9	C	Resolution	8-Bit	LSB		12.89		mV
10	C	Differential Nonlinearity	8-Bit	DNL	-0.5	±0.3	0.5	counts
11	C	Integral Nonlinearity	8-Bit	INL	-1	±0.5	1	counts
12	C	Absolute Error[2]	8-Bit	AE	-1.5	±1	1.5	counts

1 The 8-bit and 10-bit mode operation is structurally tested in production test. Absolute values are tested in 12-bit mode.

2 These values include the quantization error which is inherently 1/2 count for any A/D converter.

Table A-27. ADC Conversion Performance 3.3V range (Junction Temperature From +150°C To +160°C)

S12GNA16, S12GNA32								
Supply voltage 3.13V < V_{DDA} < 4.5 V, 150°C < T_J < 160°C, V_{REF} = V_{RH} - V_{RL} = V_{DDA}, f_{ADCCLK} = 8.0MHz The values are tested to be valid with no port AD output drivers switching simultaneous with conversions.								
Num	**C**	**Rating[1]**		**Symbol**	**Min**	**Typ**	**Max**	**Unit**
1	M	Resolution	12-Bit	LSB		0.80		mV
2	M	Differential Nonlinearity	12-Bit	DNL		±3		counts
3	M	Integral Nonlinearity	12-Bit	INL		±3		counts
4	M	Absolute Error[2]	12-Bit	AE		±4		counts
5	C	Resolution	10-Bit	LSB		3.22		mV
6	C	Differential Nonlinearity	10-Bit	DNL		±1		counts
7	C	Integral Nonlinearity	10-Bit	INL		±1		counts
8	C	Absolute Error[2]	10-Bit	AE		±2		counts
9	C	Resolution	8-Bit	LSB		12.89		mV
10	C	Differential Nonlinearity	8-Bit	DNL		±0.3		counts
11	C	Integral Nonlinearity	8-Bit	INL		±0.5		counts
12	C	Absolute Error[2]	8-Bit	AE		±1		counts

1 The 8-bit and 10-bit mode operation is structurally tested in production test. Absolute values are tested in 12-bit mode.

2 These values include the quantization error which is inherently 1/2 count for any A/D converter.

Table A-28. ADC Conversion Performance 3.3V range (Junction Temperature From –40°C To +150°C)

S12GN16, S12GN32, S12GN48, S12G48, S12G64, S12G96, S12G128, S12G192, and S12G240								
Supply voltage 3.13V < V_{DDA} < 4.5 V, -40°C < T_J < 150°C, V_{REF} = V_{RH} - V_{RL} = V_{DDA}, f_{ADCCLK} = 8.0MHz The values are tested to be valid with no port AD output drivers switching simultaneous with conversions.								
Num	**C**	**Rating[1]**		**Symbol**	**Min**	**Typ**	**Max**	**Unit**
1	P	Resolution	10-Bit	LSB		3.22		mV
2	P	Differential Nonlinearity	10-Bit	DNL	-1.5	±1	1.5	counts
3	P	Integral Nonlinearity	10-Bit	INL	-2	±1	2	counts
4	P	Absolute Error[2]	10-Bit[3] 10-Bit[4]	AE	-3 -4	±2 ±2	3 4	counts
5	C	Resolution	8-Bit	LSB		12.89		mV
6	C	Differential Nonlinearity	8-Bit	DNL	-0.5	±0.3	0.5	counts
7	C	Integral Nonlinearity	8-Bit	INL	-1	±0.5	1	counts
8	C	Absolute Error[2]	8-Bit	AE	-1.5	±1	1.5	counts

1 The 8-bit mode operation is structurally tested in production test. Absolute values are tested in 10-bit mode.
2 These values include the quantization error which is inherently 1/2 count for any A/D converter.
3 LQFP 48 and bigger
4 LQFP 32 and smaller

Table A-29. ADC Conversion Performance 3.3V range (Junction Temperature From +150°C To +160°C)

S12GN16, S12GN32								
Supply voltage 3.13V < V_{DDA} < 4.5 V, 150°C < T_J < 160°C, V_{REF} = V_{RH} - V_{RL} = V_{DDA}, f_{ADCCLK} = 8.0MHz The values are tested to be valid with no port AD output drivers switching simultaneous with conversions.								
Num	**C**	**Rating[1]**		**Symbol**	**Min**	**Typ**	**Max**	**Unit**
1	M	Resolution	10-Bit	LSB		3.22		mV
2	M	Differential Nonlinearity	10-Bit	DNL		±1		counts
3	M	Integral Nonlinearity	10-Bit	INL		±1		counts
4	M	Absolute Error[2]	10-Bit[3] 10-Bit[4]	AE		±2 ±2		counts
5	C	Resolution	8-Bit	LSB		12.89		mV
6	C	Differential Nonlinearity	8-Bit	DNL		±0.3		counts
7	C	Integral Nonlinearity	8-Bit	INL		±0.5		counts
8	C	Absolute Error[2]	8-Bit	AE		±1		counts

1 The 8-bit mode operation is structurally tested in production test. Absolute values are tested in 10-bit mode.
2 These values include the quantization error which is inherently 1/2 count for any A/D converter.
3 LQFP 48 and bigger
4 LQFP 32 and smaller

Table A-30. ADC Conversion Performance 5V range, RVA enabled

Supply voltage V_{DDA} =5.0 V, -40°C < T_J < 150°C. V_{RH} = 5.0V. f_{ADCCLK} = 0.25 .. 2MHz [1] The values are tested to be valid with no port AD/C output drivers switching simultaneous with conversions.								
Num	**C**	**Rating**		**Symbol**	**Min**	**Typ**	**Max**	**Unit**
1	P	Resolution	12-Bit	LSB		0.61		mV
2	P	Differential Nonlinearity	12-Bit	DNL		±3	±4	counts
3	P	Integral Nonlinearity	12-Bit	INL		±3.5	±5	counts
4	C	Absolute Error[2]	12-Bit	AE			±8	counts
5	P	internal VRH reference voltage	LQFP48, LQFP64, LQFP100	Vvrh_int	4.495		4.505	V
			KGD	Vvrh_int	4.490		4.510	V
6	P	internal VRL reference voltage	LQFP48, LQFP64, LQFP100	Vvrh_int	1.995		2.005V	V
			KGD	Vvrl_int	1.990		2.010V	V
7	C	VRH_INT drift vs temperature[3]		Vvrh_drift	-2		2	mV
8	C	VRL_INT drift vs temperature		Vvrl_drift	-2.5		2.5	mV
9	C	rva turn on settling time		$t_{settling_on}$			2.5	µs
10	C	rva turn off settling time		$t_{settling_off}$			1	µs

1 Upper limit of f_{ADCCLK} is restricted when RVA attenuation mode is engaged.

2 These values include the quantization error which is inherently 1/2 count for any A/D converter and the error of the internally generated reference values..

3 Please note: although different in value, drift of vrh_int and vrl_int will go in the same direction.

A.4.3.2 ADC Analog Input Parasitics

Figure A-2. ADC Analog Input Parasitics

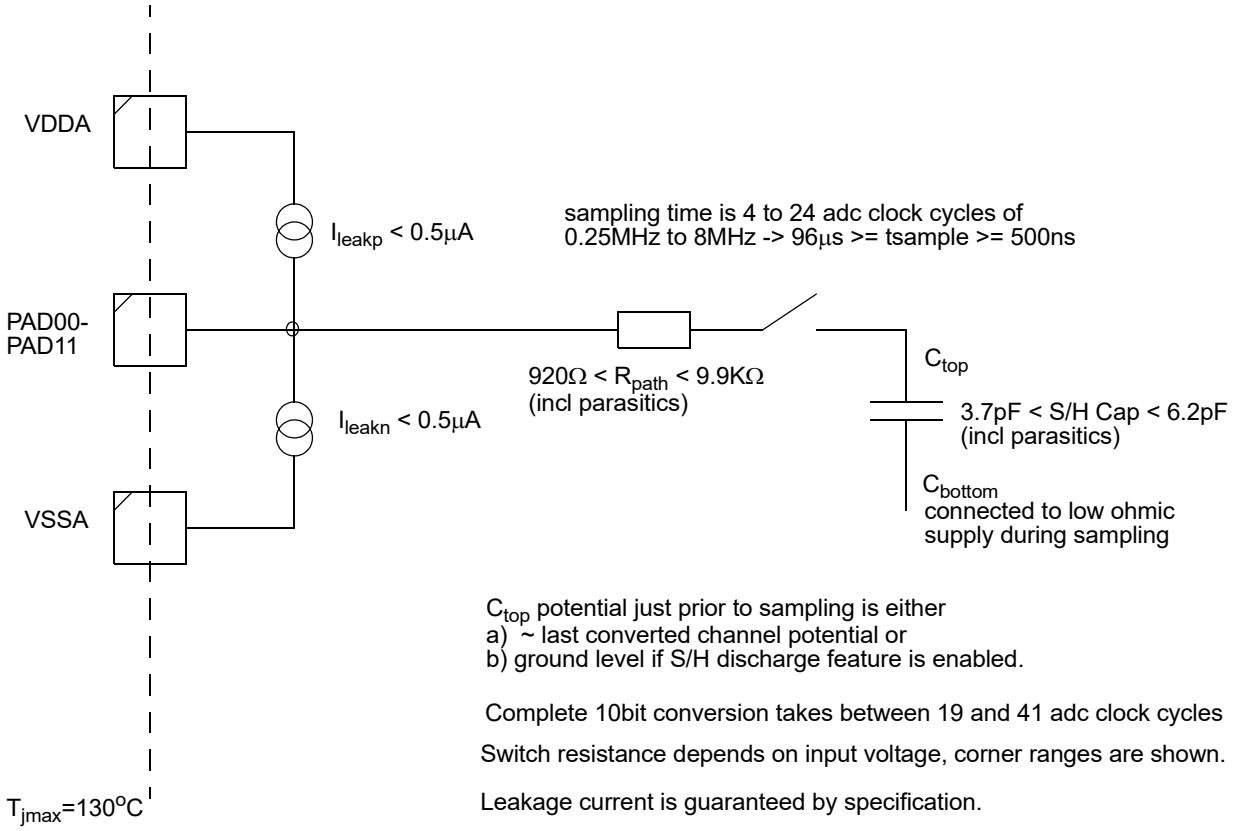

A.4.4 ADC Temperature Sensor

Table A-31. ADC Temperature Sensor

Num	C	Rating	Symbol	Min	Typ	Max	Unit
1	T	Temperature Sensor Slope	dV_{TS}	-4.0	-3.8	-3.6	mV/°C

A.5 ACMP Characteristics

This section describes the electrical characteristics of the analog comparator.

Table A-32. ACMP Electrical Characteristics (Junction Temperature From –40°C To +150°C)

Characteristics noted under conditions 3.13V <= VDDA <= 5.5V, -40°C < Tj < 150°C unless otherwise noted. Typical values noted reflect the approximate parameter mean at T_A = 25°C under nominal conditions unless otherwise noted.							
Num	**C**	**Ratings**	**Symbol**	**Min**	**Typ**	**Max**	**Unit**
1	 D C	Supply Current of ACMP module disabled module enabled ΔV_{in} > 0.1V	 I_{off} I_{run}	 100	 - 180	 5 270	 µA µA
2	P	Common mode Input voltage range ACMPM, ACMPP	V_{in}	0	-	V_{DDA}-1.5V	V
3	P	Input Offset	V_{offset}	-40	0	40	mV
4	C	Input Hysteresis	V_{hyst}	3	7	20	mV
5	P	Switch delay for -0.1V to 0.1V input step (w/o synchronize delay)	t_{delay}	-	0.3	0.6	µs

Table A-33. ACMP Electrical Characteristics (Junction Temperature From +150°C To +160°C)

Characteristics noted under conditions 3.13V <= VDDA <= 5.5V, -150°C < Tj < 160°C unless otherwise noted. Typical values noted reflect the approximate parameter mean at T_A = 25°C under nominal conditions unless otherwise noted.							
Num	**C**	**Ratings**	**Symbol**	**Min**	**Typ**	**Max**	**Unit**
1	 D C	Supply Current of ACMP module disabled module enabled ΔV_{in} > 0.1V	 I_{off} I_{run}		 - 180		 µA µA
2	M	Common mode Input voltage range ACMPM, ACMPP	V_{in}		-		V
3	M	Input Offset	V_{offset}		0		mV
4	C	Input Hysteresis	V_{hyst}		7		mV
5	M	Switch delay for -0.1V to 0.1V input step (w/o synchronize delay)	t_{delay}		0.3		µs

Figure A-3. Input Offset and Hysteresis

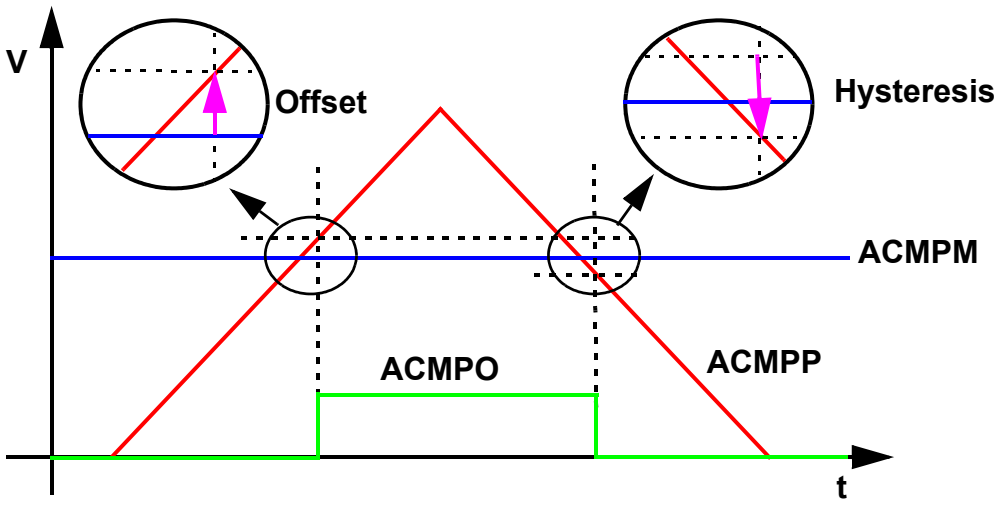

A.6 DAC Characteristics

This section describes the electrical characteristics of the digital to analog converter.

Table A-34. Static Electrical Characteristics

Characteristics noted under conditions 3.13V <= VDDA <= 5.5V>, -40°C < Tj < 150°C >, VRH=VDDA, VRL=VSSA unless otherwise noted. Typical values noted reflect the approximate parameter mean at T_A = 25°C under nominal conditions unless otherwise noted.							
Num	**C**	**Ratings**	**Symbol**	**Min**	**Typ**	**Max**	**Unit**
1	 D P P	Supply Current buffer disabled buffer enabled FVR=0 DRIVE=1 buffer enabled FVR=1 DRIVE=0	I_{buf}	 - - -	 - 365 215	 5 800 800	µA
2	 D P	Reference current reference disabled reference enabled	I_{ref}	-	 - 50	 1 150	µA
3	D	Resolution		8			bit
4	C	Relative Accuracy @ amplifier output	INL	-0.5		+0.5	LSB
5	P	Differential Nonlinearity @ amplifier output	DNL	-0.5		+0.5	LSB
6	D	DAC Range A (FVR bit = 1)	V_{out}	0...255/256(VRH-VRL)+VRL			V
7	D	DAC Range B (FVR bit = 0	V_{out}	32...287/320(VRH-VRL)+VRL			V

Table A-34. Static Electrical Characteristics

Characteristics noted under conditions 3.13V <= VDDA <= 5.5V>, -40°C < Tj < 150°C >, VRH=VDDA, VRL=VSSA unless otherwise noted. Typical values noted reflect the approximate parameter mean at T_A = 25°C under nominal conditions unless otherwise noted.							
Num	**C**	**Ratings**	**Symbol**	**Min**	**Typ**	**Max**	**Unit**
8	C	Output Voltage unbuffered range A or B (load >= 50MΩ)	V_{out}	full DAC Range A or B			V
9	P	Output Voltage (DRIVE bit = 0)[1] buffered range A (load >= 100KΩ to VSSA) buffered range A (load >= 100KΩ to VDDA) buffered range B (load >= 100KΩ to VSSA) buffered range B (load >= 100KΩ to VDDA)	V_{out}	0 0.15 full DAC Range B	- - 	VDDA-0.15 VDDA 	V
10	P	Output Voltage (DRIVE bit = 1)[2] buffered range B with 6.4KΩ load into resistor divider of 800Ω /6.56KΩ between VDDA and VSSA. (equivalent load is >= 65KΩ to VSSA) or (equivalent load is >= 7.5KΩ to VDDA)	V_{out}	full DAC Range B			V
11	D	Buffer Output Capacitive load	C_{load}	0	-	100	pF
12	P	Buffer Output Offset	V_{offset}	-30	-	+30	mV
13	P	Settling time	t_{delay}	-	3	5	µs
14	D	Reverence voltage high	V_{refh}	VDDA-0.1V	VDDA	VDDA+0.1V	V

1 DRIVE bit = 1 is not recommended in this case.

2 DRIVE bit = 0 is not allowed with this high load.

A.7 NVM

A.7.1 Timing Parameters

The time base for all NVM program or erase operations is derived from the bus clock using the FCLKDIV register. The frequency of this derived clock must be set within the limits specified as f_{NVMOP}. The NVM module does not have any means to monitor the frequency and will not prevent program or erase operation at frequencies above or below the specified minimum. When attempting to program or erase the NVM module at a lower frequency, a full program or erase transition is not assured.

All timing parameters are a function of the bus clock frequency, fNVMBUS. All program and erase times are also a function of the NVM operating frequency, f_{NVMOP}.

Each command timing is given by:

$$t_{command} = \left(f_{NVMOP(cycle)} \cdot \frac{1}{f_{NVMOP}} + f_{NVMBUS(cycle)} \cdot \frac{1}{f_{NVMBUS}} \right)$$

The timing parameters are captured exclusively during command execution (CCIF=0), excluding any time spent on the command write sequence to load and start the command. The formula above and the number of cycles in the following tables apply for the cases where the commands executed successfully in a new device, reflected in the minimum and typical timing parameters; however, due to aging, some of the commands will adjust their execution according to different margin settings and may eventually take longer to run than what the formula may return. The Max and Lfmax timing columns in the tables below already reflect this adjustment where applicable.

A summary of key timing parameters can be found from Table A-35 to Table A-39.

Table A-35. NVM Clock Timing Characteristics

Num	Rating	Symbol	Min	Typ	Max	Unit
1	Bus frequency	f_{NVMBUS}	1	25	25	MHz
2	Operating frequency	f_{NVMOP}	0.8	1.0	1.05	MHz

Table A-36. NVM Timing Characteristics)

S12GN16, S12GNA16, S12GN32, S12GNA32									
Num	**Command**	**f_{NVMOP} cycle**	**f_{NVMBUS} cycle**	**Symbol**	**Min[1]**	**Typ[2]**	**Max[3]**	**Lfmax[4]**	**Unit**
1	Erase Verify All Blocks[5,6]	0	9233	t_{RD1ALL}	0.37	0.37	0.74	18.47	ms
2	Erase Verify Block (Pflash)[5]	0	8737	t_{RD1BLK_P}	0.35	0.35	0.7	17.47	ms
3	Erase Verify Block (EEPROM)[6]	0	1000	t_{RD1BLK_D}	0.04	0.04	0.08	2	ms
4	Erase Verify P-Flash Section	0	486	t_{RD1SEC}	19.44	19.44	38.88	972	ms
5	Read Once	0	445	t_{RDONCE}	17.8	17.8	17.8	445	µs
6	Program P-Flash (4 Word)	164	2935	t_{PGM_4}	0.27	0.28	0.63	11.95	ms
7	Program Once	164	2888	$t_{PGMONCE}$	0.27	0.28	0.28	3.09	ms
8	Erase All Blocks[5,6]	100066	9569	t_{ERSALL}	95.68	100.45	100.83	144.22	ms
9	Erase Flash Block (Pflash)[5]	100060	8975	t_{ERSBLK_P}	95.65	100.42	100.78	143.03	ms
10	Erase Flash Block (EEPROM)[6]	100060	1296	t_{ERSBLK_D}	95.35	100.11	100.16	127.67	ms
11	Erase P-Flash Sector	20015	875	t_{ERSPG}	19.1	20.05	20.09	26.77	ms
12	Unsecure Flash	100066	9647	t_{UNSECU}	95.69	100.45	100.84	144.38	ms
13	Verify Backdoor Access Key	0	481	t_{VFYKEY}	19.24	19.24	19.24	481	µs
14	Set User Margin Level	0	404	t_{MLOADU}	16.16	16.16	16.16	404	µs
15	Set Factory Margin Level	0	413	t_{MLOADF}	16.52	16.52	16.52	413	µs
16	Erase Verify EEPROM Section	0	546	$t_{DRD1SEC}$	0.02	0.02	0.04	1.09	ms
17	Program EEPROM (1 Word)	68	1565	t_{DPGM_1}	0.13	0.13	0.32	6.35	ms
18	Program EEPROM (2 Word)	136	2512	t_{DPGM_2}	0.23	0.24	0.54	10.22	ms
19	Program EEPROM (3 Word)	204	3459	t_{DPGM_3}	0.33	0.34	0.76	14.09	ms
20	Program EEPROM (4 Word)	272	4406	t_{DPGM_4}	0.44	0.45	0.98	17.96	ms
21	Erase EEPROM Sector	5015	753	t_{DERSPG}	4.81	5.05	20.57	37.88	ms

1 Minimum times are based on maximum f_{NVMOP} and maximum f_{NVMBUS}

2 Typical times are based on typical f_{NVMOP} and typical f_{NVMBUS}

3 Maximum times are based on typical f_{NVMOP} and typical f_{NVMBUS} plus aging

4 Lowest-frequency max times are based on minimum f_{NVMOP} and minimum f_{NVMBUS} plus aging

5 Affected by Pflash size

6 Affected by EEPROM size

Table A-37. NVM Timing Characteristics)

, S12GN48, S12G48, S12G64, S12GA64									
Num	**Command**	f_{NVMOP} **cycle**	f_{NVMBUS} **cycle**	**Symbol**	**Min[1]**	**Typ[2]**	**Max[3]**	**Lfmax[4]**	**Unit**
1	Erase Verify All Blocks[5,6]	0	17937	t_{RD1ALL}	0.72	0.72	1.43	35.87	ms
2	Erase Verify Block (Pflash)[5]	0	16924	t_{RD1BLK_P}	0.68	0.68	1.35	33.85	ms
3	Erase Verify Block (EEPROM)[6]	0	1512	t_{RD1BLK_D}	0.06	0.06	0.12	3.02	ms
4	Erase Verify P-Flash Section	0	476	t_{RD1SEC}	19.04	19.04	38.08	952	ms
5	Read Once	0	445	t_{RDONCE}	17.8	17.8	17.8	445	µs
6	Program P-Flash (4 Word)	164	2925	t_{PGM_4}	0.27	0.28	0.63	11.91	ms
7	Program Once	164	2888	$t_{PGMONCE}$	0.27	0.28	0.28	3.09	ms
8	Erase All Blocks[5,6]	100066	18273	t_{ERSALL}	96.03	100.8	101.53	161.63	ms
9	Erase Flash Block (Pflash)[5]	100060	17157	t_{ERSBLK_P}	95.98	100.75	101.43	159.39	ms
10	Erase Flash Block (EEPROM)[6]	100060	1808	t_{ERSBLK_D}	95.37	100.13	100.2	128.69	ms
11	Erase P-Flash Sector	20015	865	t_{ERSPG}	19.1	20.05	20.08	26.75	ms
12	Unsecure Flash	100066	18351	t_{UNSECU}	96.03	100.8	101.53	161.78	ms
13	Verify Backdoor Access Key	0	481	t_{VFYKEY}	19.24	19.24	19.24	481	µs
14	Set User Margin Level	0	399	t_{MLOADU}	15.96	15.96	15.96	399	µs
15	Set Factory Margin Level	0	408	t_{MLOADF}	16.32	16.32	16.32	408	µs
16	Erase Verify EEPROM Section	0	546	$t_{DRD1SEC}$	0.02	0.02	0.04	1.09	ms
17	Program EEPROM (1 Word)	68	1565	t_{DPGM_1}	0.13	0.13	0.32	6.35	ms
18	Program EEPROM (2 Word)	136	2512	t_{DPGM_2}	0.23	0.24	0.54	10.22	ms
19	Program EEPROM (3 Word)	204	3459	t_{DPGM_3}	0.33	0.34	0.76	14.09	ms
20	Program EEPROM (4 Word)	272	4406	t_{DPGM_4}	0.44	0.45	0.98	17.96	ms
21	Erase EEPROM Sector	5015	753	t_{DERSPG}	4.81	5.05	20.57	37.88	ms

1 Minimum times are based on maximum f_{NVMOP} and maximum f_{NVMBUS}

2 Typical times are based on typical f_{NVMOP} and typical f_{NVMBUS}

3 Maximum times are based on typical f_{NVMOP} and typical f_{NVMBUS} plus aging

4 Lowest-frequency max times are based on minimum f_{NVMOP} and minimum f_{NVMBUS} plus aging

5 Affected by Pflash size

6 Affected by EEPROM size

Table A-38. NVM Timing Characteristics)

S12G96, S12GA96, S12G128, S12GA128									
Num	**Command**	**f_{NVMOP} cycle**	**f_{NVMBUS} cycle**	**Symbol**	**Min[1]**	**Typ[2]**	**Max[3]**	**Lfmax[4]**	**Unit**
1	Erase Verify All Blocks[5,6]	0	35345	t_{RD1ALL}	1.41	1.41	2.83	70.69	ms
2	Erase Verify Block (Pflash)[5]	0	33308	t_{RD1BLK_P}	1.33	1.33	2.66	66.62	ms
3	Erase Verify Block (EEPROM)[6]	0	2536	t_{RD1BLK_D}	0.1	0.1	0.2	5.07	ms
4	Erase Verify P-Flash Section	0	476	t_{RD1SEC}	19.04	19.04	38.08	952	ms
5	Read Once	0	445	t_{RDONCE}	17.8	17.8	17.8	445	µs
6	Program P-Flash (4 Word)	164	2925	t_{PGM_4}	0.27	0.28	0.63	11.91	ms
7	Program Once	164	2888	$t_{PGMONCE}$	0.27	0.28	0.28	3.09	ms
8	Erase All Blocks[5,6]	100066	35681	t_{ERSALL}	96.73	101.49	102.92	196.44	ms
9	Erase Flash Block (Pflash)[5]	100060	33541	t_{ERSBLK_P}	96.64	101.4	102.74	192.16	ms
10	Erase Flash Block (EEPROM)[6]	100060	2832	t_{ERSBLK_D}	95.41	100.17	100.29	130.74	ms
11	Erase P-Flash Sector	20015	865	t_{ERSPG}	19.1	20.05	20.08	26.75	ms
12	Unsecure Flash	100066	35759	t_{UNSECU}	96.73	101.5	102.93	196.6	ms
13	Verify Backdoor Access Key	0	481	t_{VFYKEY}	19.24	19.24	19.24	481	µs
14	Set User Margin Level	0	399	t_{MLOADU}	15.96	15.96	15.96	399	µs
15	Set Factory Margin Level	0	408	t_{MLOADF}	16.32	16.32	16.32	408	µs
16	Erase Verify EEPROM Section	0	546	$t_{DRD1SEC}$	0.02	0.02	0.04	1.09	ms
17	Program EEPROM (1 Word)	68	1565	t_{DPGM_1}	0.13	0.13	0.32	6.35	ms
18	Program EEPROM (2 Word)	136	2512	t_{DPGM_2}	0.23	0.24	0.54	10.22	ms
19	Program EEPROM (3 Word)	204	3459	t_{DPGM_3}	0.33	0.34	0.76	14.09	ms
20	Program EEPROM (4 Word)	272	4406	t_{DPGM_4}	0.44	0.45	0.98	17.96	ms
21	Erase EEPROM Sector	5015	753	t_{DERSPG}	4.81	5.05	20.57	37.88	ms

1 Minimum times are based on maximum f_{NVMOP} and maximum f_{NVMBUS}

2 Typical times are based on typical f_{NVMOP} and typical f_{NVMBUS}

3 Maximum times are based on typical f_{NVMOP} and typical f_{NVMBUS} plus aging

4 Lowest-frequency max times are based on minimum f_{NVMOP} and minimum f_{NVMBUS} plus aging

5 Affected by Pflash size

6 Affected by EEPROM size

Table A-39. NVM Timing Characteristics)

S12G192, S12GA192, S12G240, S12GA240									
Num	**Command**	f_{NVMOP} **cycle**	f_{NVMBUS} **cycle**	**Symbol**	**Min[1]**	**Typ[2]**	**Max[3]**	**Lfmax[4]**	**Unit**
1	Erase Verify All Blocks[5,6]	0	64361	t_{RD1ALL}	2.57	2.57	5.15	128.72	ms
2	Erase Verify Block (Pflash)[5]	0	62128	t_{RD1BLK_P}	2.49	2.49	4.97	124.26	ms
3	Erase Verify Block (EEPROM)[6]	0	2586	t_{RD1BLK_D}	0.1	0.1	0.21	5.17	ms
4	Erase Verify P-Flash Section	0	606	t_{RD1SEC}	0.02	02	0.05	1.21	ms
5	Read Once	0	516	t_{RDONCE}	20.64	20.64	20.64	516	µs
6	Program P-Flash (4 Word)	164	3014	t_{PGM_4}	0.28	0.28	0.65	12.26	ms
7	Program Once	164	2960	$t_{PGMONCE}$	0.27	0.28	0.28	3.17	ms
8	Erase All Blocks[5,6]	200126	65067	t_{ERSALL}	193.2	202.73	205.33	380.29	ms
9	Erase Flash Block (Pflash)[5]	200120	62651	t_{ERSBLK_P}	193.1	202.63	205.13	375.45	ms
10	Erase Flash Block (EEPROM)[6]	100060	2871	t_{ERSBLK_D}	95.41	100.17	100.29	130.82	ms
11	Erase P-Flash Sector	20015	962	t_{ERSPG}	19.1	20.05	20.09	26.94	ms
12	Unsecure Flash	200126	65145	t_{UNSECU}	193.2	202.73	205.34	380.45	ms
13	Verify Backdoor Access Key	0	549	t_{VFYKEY}	21.96	21.96	21.96	549	µs
14	Set User Margin Level	0	426	t_{MLOADU}	17.04	17.04	17.04	426	µs
15	Set Factory Margin Level	0	435	t_{MLOADF}	17.4	17.4	17.4	435	µs
16	Erase Verify EEPROM Section	0	582	$t_{DRD1SEC}$	0.02	0.02	0.05	1.16	ms
17	Program EEPROM (1 Word)	68	1585	t_{DPGM_1}	0.13	0.13	0.32	6.43	ms
18	Program EEPROM (2 Word)	136	2532	t_{DPGM_2}	0.23	0.24	0.54	10.3	ms
19	Program EEPROM (3 Word)	204	3479	t_{DPGM_3}	0.33	0.34	0.76	14.17	ms
20	Program EEPROM (4 Word)	272	4426	t_{DPGM_4}	0.44	0.45	0.98	18.04	ms
21	Erase EEPROM Sector	5015	777	t_{DERSPG}	4.81	5.05	20.59	38.28	ms

1 Minimum times are based on maximum f_{NVMOP} and maximum f_{NVMBUS}

2 Typical times are based on typical f_{NVMOP} and typical f_{NVMBUS}

3 Maximum times are based on typical f_{NVMOP} and typical f_{NVMBUS} plus aging

4 Lowest-frequency max times are based on minimum f_{NVMOP} and minimum f_{NVMBUS} plus aging

5 Affected by Pflash size

6 Affected by EEPROM size

A.7.2 NVM Reliability Parameters

The reliability of the NVM blocks is guaranteed by stress test during qualification, constant process monitors and burn-in to screen early life failures.

The data retention and program/erase cycling failure rates are specified at the operating conditions noted. The program/erase cycle count on the sector is incremented every time a sector or mass erase event is executed.

Table A-40. NVM Reliability Characteristics

Conditions are shown in Table A-4 unless otherwise noted							
NUM	**C**	**Rating**	**Symbol**	**Min**	**Typ**	**Max**	**Unit**
		Program Flash Arrays					
1	C	Data retention at an average junction temperature of T_{Javg} = 85°C[1] after up to 10,000 program/erase cycles	t_{NVMRET}	20	100[2]	—	Years
2a	C	Program Flash number of program/erase cycles (-40°C ≤ Tj ≤ 150°C)	n_{FLPE}	10K	100K[3]	—	Cycles
2b	C	Program Flash number of program/erase cycles (150°C ≤ Tj ≤ 160°C)	n_{FLPE}	1K	100K[3]	—	Cycles
		EEPROM Array					
3	C	Data retention at an average junction temperature of T_{Javg} = 85°C[1] after up to 100,000 program/erase cycles	t_{NVMRET}	5	100[2]	—	Years
4	C	Data retention at an average junction temperature of T_{Javg} = 85°C[1] after up to 10,000 program/erase cycles	t_{NVMRET}	10	100[2]	—	Years
5	C	Data retention at an average junction temperature of T_{Javg} = 85°C[1] after less than 100 program/erase cycles	t_{NVMRET}	20	100[2]	—	Years
6a	C	EEPROM number of program/erase cycles (-40°C ≤ Tj ≤ 150°C)	n_{FLPE}	100K	500K[3]	—	Cycles
6b	C	EEPROM number of program/erase cycles (150°C ≤ Tj ≤ 160°C)	n_{FLPE}	10K	500K[3]	—	Cycles

1 T_{Javg} does not exceed 85°C in a typical temperature profile over the lifetime of a consumer, industrial or automotive application.

2 Typical data retention values are based on intrinsic capability of the technology measured at high temperature and de-rated to 25°C using the Arrhenius equation. For additional information on how NXP defines Typical Data Retention, please refer to Engineering Bulletin EB618

3 Spec table quotes typical endurance evaluated at 25°C for this product family. For additional information on how NXP defines Typical Endurance, please refer to Engineering Bulletin EB619.

A.8 Phase Locked Loop

A.8.1 Jitter Definitions

With each transition of the feedback clock, the deviation from the reference clock is measured and input voltage to the VCO is adjusted accordingly.The adjustment is done continuously with no abrupt changes in the VCOCLK frequency. Noise, voltage, temperature and other factors cause slight variations in the control loop resulting in a clock jitter. This jitter affects the real minimum and maximum clock periods as illustrated in Figure A-4.

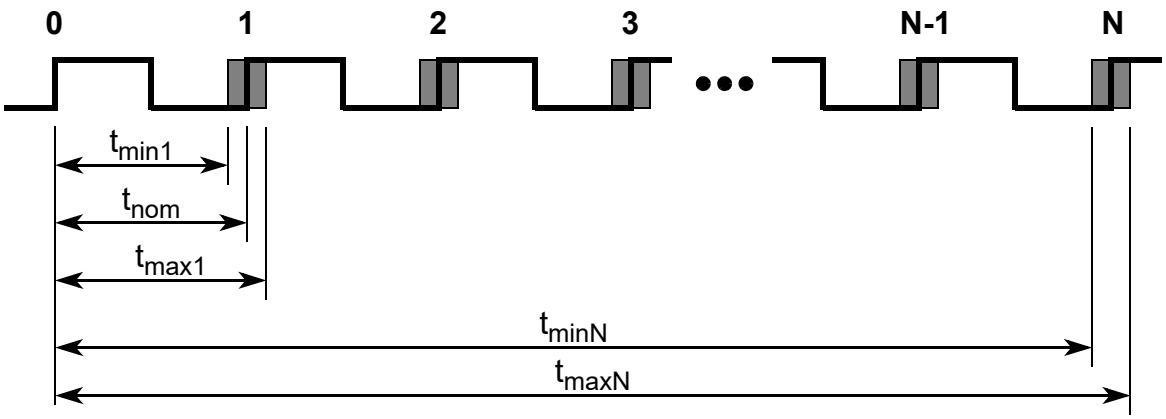

Figure A-4. Jitter Definitions

The relative deviation of t_{nom} is at its maximum for one clock period, and decreases towards zero for larger number of clock periods (N).

Defining the jitter as:

$$J(N) = \max\left(\left|1 - \frac{t_{max}(N)}{N \cdot t_{nom}}\right|, \left|1 - \frac{t_{min}(N)}{N \cdot t_{nom}}\right|\right)$$

For N < 100, the following equation is a good fit for the maximum jitter:

$$J(N) = \frac{j_1}{\sqrt{N}}$$

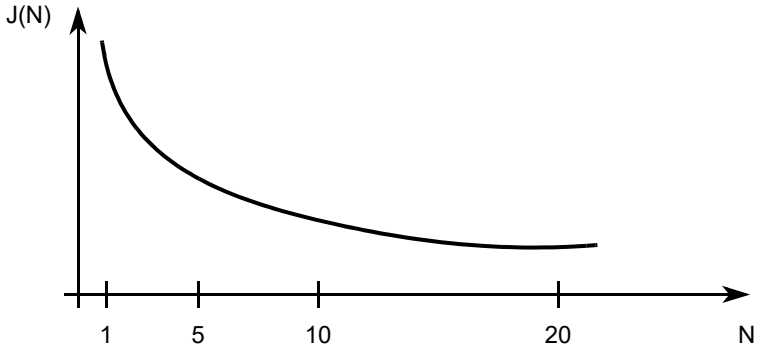

Figure A-5. Maximum Bus Clock Jitter Approximation

NOTE

On timers and serial modules a prescaler will eliminate the effect of the jitter to a large extent.

A.8.2 Electrical Characteristics for the PLL

Table A-41. PLL Characteristics

Conditions are shown in Table A-16 unless otherwise noted							
Num	**C**	**Rating**	**Symbol**	**Min**	**Typ**	**Max**	**Unit**
1	D	VCO frequency during system reset	f_{VCORST}	8		25	MHz
2	C	VCO locking range	f_{VCO}	32		50	MHz
3	C	Reference Clock	f_{REF}	1			MHz
4	D	Lock Detection	$\lvert\Delta_{Lock}\rvert$	0		1.5	%[1]
5	D	Un-Lock Detection	$\lvert\Delta_{unl}\rvert$	0.5		2.5	%[1]
6	C	Time to lock	t_{lock}			150 + $256/f_{REF}$	µs
7	C	Jitter fit parameter 1[2] IRC as reference clock source	j_{irc}			1.4	%
8	C	Jitter fit parameter 1[3] XOSCLCP as reference clock source	j_{ext}			1.0	%

1 % deviation from target frequency

2 f_{REF} = 1MHz (IRC), f_{BUS} = 25MHz equivalent f_{PLL} = 50MHz, CPMUSYNR=0x58, CPMUREFDIV=0x00, CPMUPOSTDIV=0x00

3 f_{REF} = 4MHz (XOSCLCP), f_{BUS} = 24MHz equivalent f_{PLL} = 48MHz, CPMUSYNR=0x05, CPMUREFDIV=0x40, CPMUPOSTDIV=0x00

A.9 Electrical Characteristics for the IRC1M

Table A-42. IRC1M Characteristics (Junction Temperature From –40°C To +150°C, all packages)

Conditions are: Temperature option C, V, or M (see Table A-4)							
Num	**C**	**Rating**	**Symbol**	**Min**	**Typ**	**Max**	**Unit**
1	P	Internal Reference Frequency, factory trimmed	f_{IRC1M_TRIM}	0.987	1	1.013	MHz

Table A-43. IRC1M Characteristics (Junction Temperature From –40°C To +150°C, KGD)

Conditions are: Temperature option C, V, or M (see Table A-4)							
Num	**C**	**Rating**	**Symbol**	**Min**	**Typ**	**Max**	**Unit**
1	P	Internal Reference Frequency, factory trimmed	f_{IRC1M_TRIM}	0.980	1	1.020	MHz

Table A-44. IRC1M Characteristics (Junction Temperature From +150°C To +160°C, all packages)

Conditions are: Temperature option W (see Table A-4)							
Num	**C**	**Rating**	**Symbol**	**Min**	**Typ**	**Max**	**Unit**
1	M	Internal Reference Frequency, factory trimmed	f_{IRC1M_TRIM}	0.987	1	1.013	MHz

A.10 Electrical Characteristics for the Oscillator (XOSCLCP)

Table A-45. XOSCLCP Characteristics (Junction Temperature From –40°C To +150°C)

Conditions are shown in Table A-4 unless otherwise noted							
Num	C	Rating	Symbol	Min	Typ	Max	Unit
1	C	Nominal crystal or resonator frequency	f_{OSC}	4.0		16	MHz
2	P	Startup Current	i_{OSC}	100			μA
3a	C	Oscillator start-up time (4MHz)[1]	t_{UPOSC}	—	2	10	ms
3b	C	Oscillator start-up time (8MHz)[1]	t_{UPOSC}	—	1.6	8	ms
3c	C	Oscillator start-up time (16MHz)[1]	t_{UPOSC}	—	1	5	ms
4	P	Clock Monitor Failure Assert Frequency	f_{CMFA}	200	450	1200	KHz
5	D	Input Capacitance (EXTAL, XTAL pins)	C_{IN}		7		pF
6	C	EXTAL Pin Input Hysteresis	$V_{HYS,EXTAL}$	—	120	—	mV
7	C	EXTAL Pin oscillation amplitude (loop controlled Pierce) all mask sets except for 2N75C and 2N55V	$V_{PP,EXTAL}$	—	1.0	—	V
8	D	EXTAL Pin oscillation required amplitude[2] (loop controlled Pierce) all mask sets except for 2N75C and 2N55V	$V_{PP,EXTAL}$	0.8	—	1.5	V

1 These values apply for carefully designed PCB layouts with capacitors that match the crystal/resonator requirements.

2 Needs to be measured at room temperature on the application board using a probe with very low (<=5pF) input capacitance.

Table A-46. XOSCLCP Characteristics (Junction Temperature From +150°C To +160°C)

Conditions are shown in Table A-4 unless otherwise noted							
Num	C	Rating	Symbol	Min	Typ	Max	Unit
1	C	Nominal crystal or resonator frequency	f_{OSC}	4.0		16	MHz
2	M	Startup Current	i_{OSC}	100			µA
3a	C	Oscillator start-up time (4MHz)[1]	t_{UPOSC}	—	2	10	ms
3b	C	Oscillator start-up time (8MHz)[1]	t_{UPOSC}	—	1.6	8	ms
3c	C	Oscillator start-up time (16MHz)[1]	t_{UPOSC}	—	1	5	ms
4	M	Clock Monitor Failure Assert Frequency	f_{CMFA}	200	450	1200	KHz
5	D	Input Capacitance (EXTAL, XTAL pins)	C_{IN}		7		pF
6	C	EXTAL Pin Input Hysteresis	$V_{HYS,EXTAL}$	—	120	—	mV
7	C	EXTAL Pin oscillation amplitude (loop controlled Pierce) all mask sets except for 2N75C and 2N55V	$V_{PP,EXTAL}$	—	1.0	—	V
8	D	EXTAL Pin oscillation required amplitude[2] (loop controlled Pierce) all mask sets except for 2N75C and 2N55V	$V_{PP,EXTAL}$	0.8	—	1.5	V

1 These values apply for carefully designed PCB layouts with capacitors that match the crystal/resonator requirements.

2 Needs to be measured at room temperature on the application board using a probe with very low (<=5pF) input capacitance.

A.11 Reset Characteristics

Table A-47. Reset and Stop Characteristics

Conditions are shown in Table A-4 unless otherwise noted							
Num	**C**	**Rating**	**Symbol**	**Min**	**Typ**	**Max**	**Unit**
1	C	Reset input pulse width, minimum input time	PW_{RSTL}	2			t_{VCORST}
2	C	Startup from Reset	n_{RST}		768		t_{VCORST}
3	C	STOP recovery time	t_{STP_REC}		23		µs

A.12 Electrical Specification for Voltage Regulator

Table A-48. Voltage Regulator Characteristics (Junction Temperature From –40°C To +150°C)

Num	C	Characteristic	Symbol	Min	Typical	Max	Unit
1	P	Input Voltages	$V_{VDDR,A}$	3.13	—	5.5	V
2	P	V_{DDA} Low Voltage Interrupt Assert Level [1] V_{DDA} Low Voltage Interrupt Deassert Level	V_{LVIA} V_{LVID}	4.04 4.19	4.23 4.38	4.40 4.49	V V
3	P	V_{DDX} Low Voltage Reset Deassert [2 3 4]	V_{LVRXD}	—	3.05	3.13	V
4	P	V_{DDX} Low Voltage Reset Assert [2 3 4]	V_{LVRXA}	2.95	3.02	—	V
5	T	CPMU ACLK frequency (CPMUACLKTR[5:0] = %000000)	f_{ACLK}	—	10	—	KHz
6	C	Trimmed ACLK internal clock[5] $\Delta f / f_{nominal}$	df_{ACLK}	- 5%	—	+ 5%	—
7	D	The first period after enabling the counter by APIFE might be reduced by ACLK start up delay	t_{sdel}	—	—	100	us
8	D	The first period after enabling the COP might be reduced by ACLK start up delay	t_{sdel}	—	—	100	us
9	P	Output Voltage Flash Full Performance Mode Reduced Power Mode (MCU STOP mode)	V_{DDF}	 2.6 1.1	 2.82 1.6	 2.9 1.98	 V V
10	C	V_{DDF} Voltage Distribution over input voltage V_{DDA}[6] $4.5V \le V_{DDA} \le 5.5V$, $T_A = 27^oC$ compared to $V_{DDA} = 5.0V$	Δ_{VDDF}	-5	0	5	mV
11	C	V_{DDF} Voltage Distribution over ambient temperature T_A $V_{DDA} = 5V$, $-40°C \le T_A \le 125°C$ compared to V_{DDF} production test value (see A.16, “ADC Conversion Result Reference”)	Δ_{VDDF}	-20	-	+20	mV

1 Monitors VDDA, active only in Full Performance Mode. Indicates I/O & ADC performance degradation due to low supply voltage.

2 Device functionality is guaranteed on power down to the LVR assert level

3 Monitors VDDX, active only in Full Performance Mode. MCU is monitored by the POR in RPM (see Figure A-6)

4 $V_{LVRXA} < V_{LVRXD}$. The hysteresis is unspecified and untested.

5 The ACLK Trimming CPMUACLKTR[5:0] bits must be set so that f_{ACLK}=10KHz.

6 VDDR ≥ 3.13V

Table A-49. Voltage Regulator Characteristics (Junction Temperature From +150°C To +160°C)

Num	C	Characteristic	Symbol	Min	Typical	Max	Unit
1	M	Input Voltages	$V_{VDDR,A}$	3.13	—	5.5	V
2	M	V_{DDA} Low Voltage Interrupt Assert Level [1] V_{DDA} Low Voltage Interrupt Deassert Level	V_{LVIA} V_{LVID}	4.04 4.19	4.23 4.38	4.40 4.49	V V
3	M	V_{DDX} Low Voltage Reset Deassert [2 3 4]	V_{LVRXD}	—	3.05	3.13	V
4	M	V_{DDX} Low Voltage Reset Assert [2 3 4]	V_{LVRXA}	2.95	3.02	—	V
5	T	CPMU ACLK frequency (CPMUACLKTR[5:0] = %000000)	f_{ACLK}	—	10	—	KHz
6	C	Trimmed ACLK internal clock[5] $\Delta f / f_{nominal}$	df_{ACLK}	- 5%	—	+ 5%	—
7	D	The first period after enabling the counter by APIFE might be reduced by ACLK start up delay	t_{sdel}	—	—	100	us
8	D	The first period after enabling the COP might be reduced by ACLK start up delay	t_{sdel}	—	—	100	us
9	M	Output Voltage Flash Full Performance Mode Reduced Power Mode (MCU STOP mode)	V_{DDF}	2.6 1.1	2.82 1.6	2.9 1.98	V V
10	C	V_{DDF} Voltage Distribution over input voltage V_{DDA}[6] $4.5V \le V_{DDA} \le 5.5V$, $T_A = 27^oC$ compared to $V_{DDA} = 5.0V$	Δ_{VDDF}	-5	0	5	mV
11	C	V_{DDF} Voltage Distribution over ambient temperature T_A $V_{DDA} = 5V$, $-40°C \le T_A \le 125°C$ compared to V_{DDF} production test value (see A.16, “ADC Conversion Result Reference”)	Δ_{VDDF}	-20	-	+20	mV

1 Monitors VDDA, active only in Full Performance Mode. Indicates I/O & ADC performance degradation due to low supply voltage.

2 Device functionality is guaranteed on power down to the LVR assert level

3 Monitors VDDX, active only in Full Performance Mode. MCU is monitored by the POR in RPM (see Figure A-6)

4 $V_{LVRXA} < V_{LVRXD}$. The hysteresis is unspecified and untested.

5 The ACLK Trimming CPMUACLKTR[5:0] bits must be set so that f_{ACLK}=10KHz.

6 VDDR ≥ 3.13V

NOTE

The LVR monitors the voltages V_{DD}, V_{DDF} and V_{DDX}. As soon as voltage drops on these supplies which would prohibit the correct function of the microcontroller, the LVR is triggering a reset.

A.13 Chip Power-up and Voltage Drops

LVI (low voltage interrupt), POR (power-on reset) and LVRs (low voltage reset) handle chip power-up or drops of the supply voltage.

Figure A-6. Chip Power-up and Voltage Drops

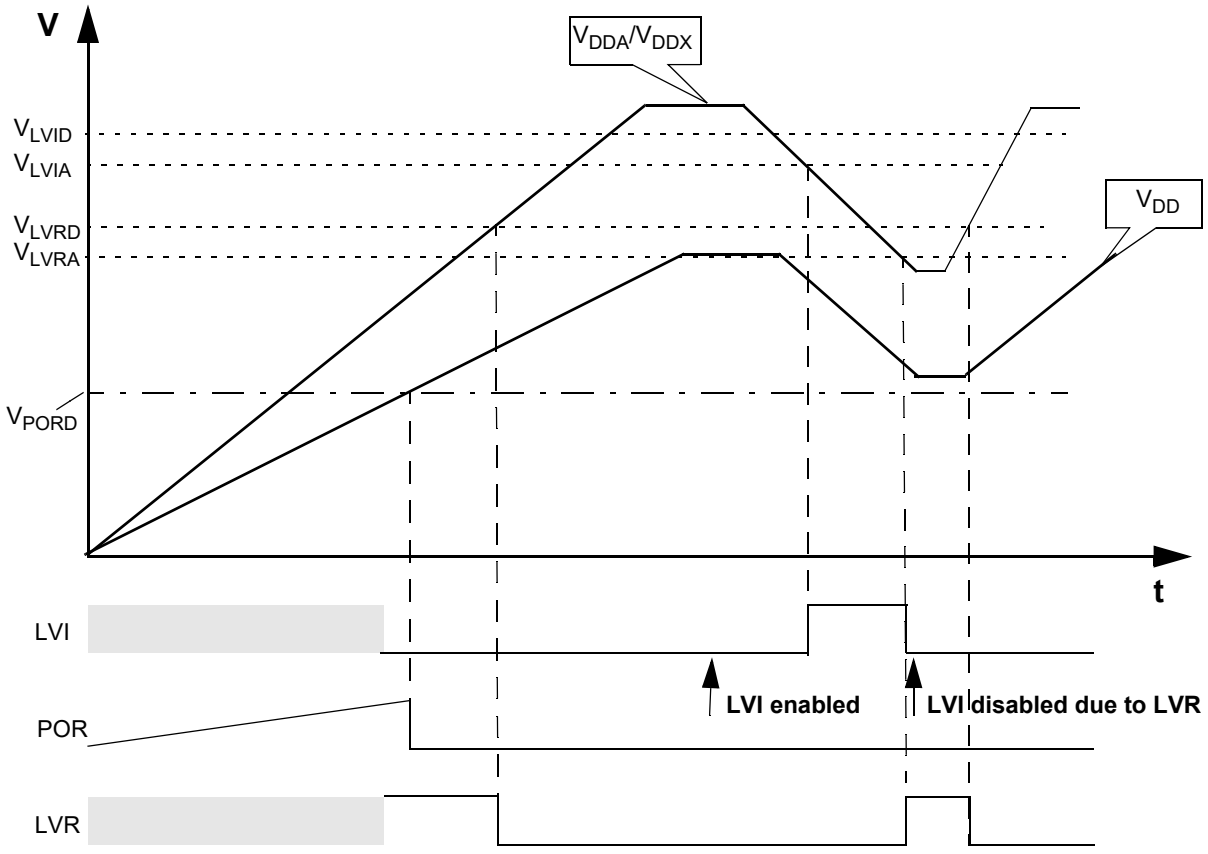

A.14 MSCAN

Table A-50. MSCAN Wake-up Pulse Characteristics

Conditions are shown in Table A-4 unless otherwise noted							
Num	**C**	**Rating**	**Symbol**	**Min**	**Typ**	**Max**	**Unit**
1	P	MSCAN wakeup dominant pulse filtered	t_{WUP}	—	—	1.5	µs
2	P	MSCAN wakeup dominant pulse pass	t_{WUP}	5	—	—	µs

A.15 SPI Timing

This section provides electrical parametrics and ratings for the SPI. In Table A-51 the measurement conditions are listed.

Table A-51. Measurement Conditions

Conditions are 4.5 V < V_{DD35} < 5.5 V junction temperature from –40°C to T_{Jmax}		
Description	**Value**	**Unit**
Drive mode	Full drive mode	—
Load capacitance C_{LOAD}[1], on all outputs	50	pF
Thresholds for delay measurement points	(35% / 65%) V_{DDX}	V

1 Timing specified for equal load on all SPI output pins. Avoid asymmetric load.

A.15.1 Master Mode

In Figure A-7 the timing diagram for master mode with transmission format CPHA = 0 is depicted.

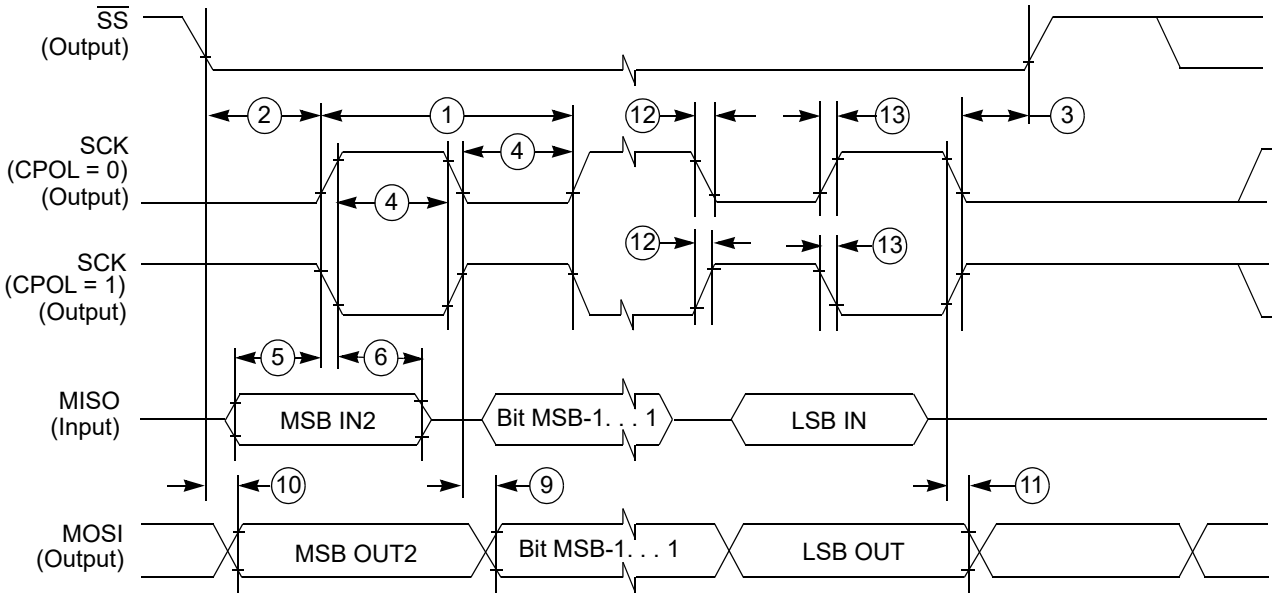

1. If configured as an output.
2. LSBF = 0. For LSBF = 1, bit order is LSB, bit 1, bit 2... MSB.

Figure A-7. SPI Master Timing (CPHA = 0)

In Figure A-8 the timing diagram for master mode with transmission format CPHA=1 is depicted.

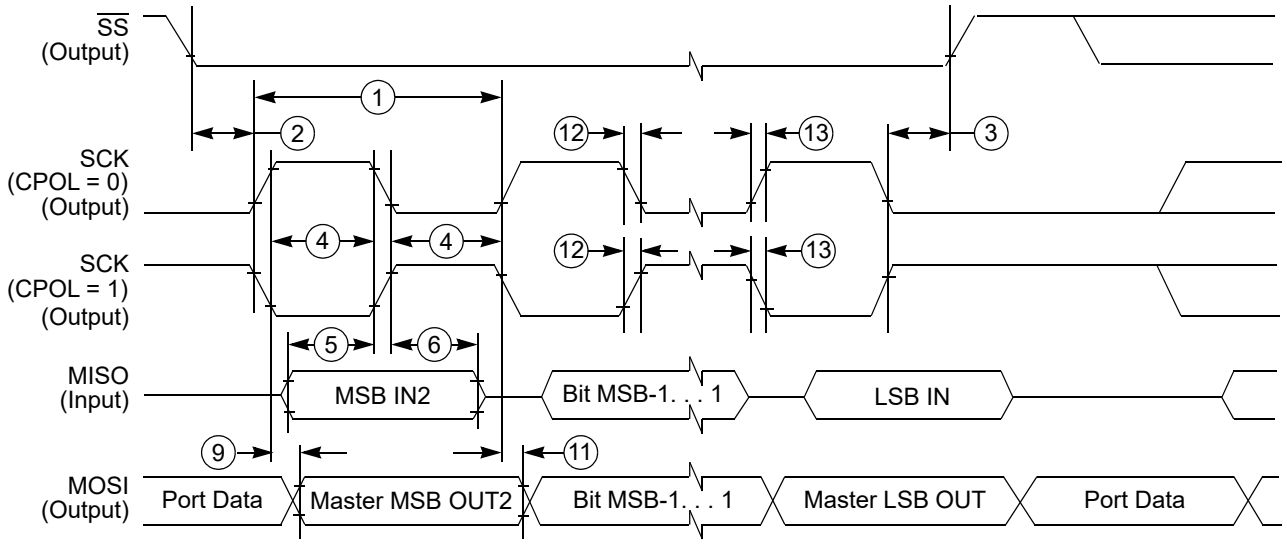

1.If configured as output
2. LSBF = 0. For LSBF = 1, bit order is LSB, bit 1,bit 2... MSB.

Figure A-8. SPI Master Timing (CPHA = 1)

In Table A-52 the timing characteristics for master mode are listed.

Table A-52. SPI Master Mode Timing Characteristics

Conditions are 4.5 V < V_{DD35} < 5.5 V junction temperature from –40°C to T_{Jmax}.							
Num	**C**	**Characteristic**	**Symbol**	**Min**	**Typ**	**Max**	**Unit**
1	D	SCK Frequency	f_{sck}	1/2048	—	1/2	f_{bus}
1	D	SCK Period	t_{sck}	2	—	2048	t_{bus}
2	D	Enable Lead Time	t_L	—	1/2	—	t_{sck}
3	D	Enable Trail Time	t_T	—	1/2	—	t_{sck}
4	D	Clock (SCK) High or Low Time	t_{wsck}	—	1/2	—	t_{sck}
5	D	Data Setup Time (Inputs)	t_{su}	8	—	—	ns
6	D	Data Hold Time (Inputs)	t_{hi}	8	—	—	ns
9	D	Data Valid after SCK Edge	t_{vsck}	—	—	15	ns
10	D	Data Valid after $\overline{SS}$ fall (CPHA=0)	t_{vss}	—	—	15	ns
11	D	Data Hold Time (Outputs)	t_{ho}	0	—	—	ns
12	D	Rise and Fall Time Inputs	t_{rfi}	—	—	9	ns
13	D	Rise and Fall Time Outputs	t_{rfo}	—	—	9	ns

A.15.2 Slave Mode

In Figure A-9 the timing diagram for slave mode with transmission format CPHA = 0 is depicted.

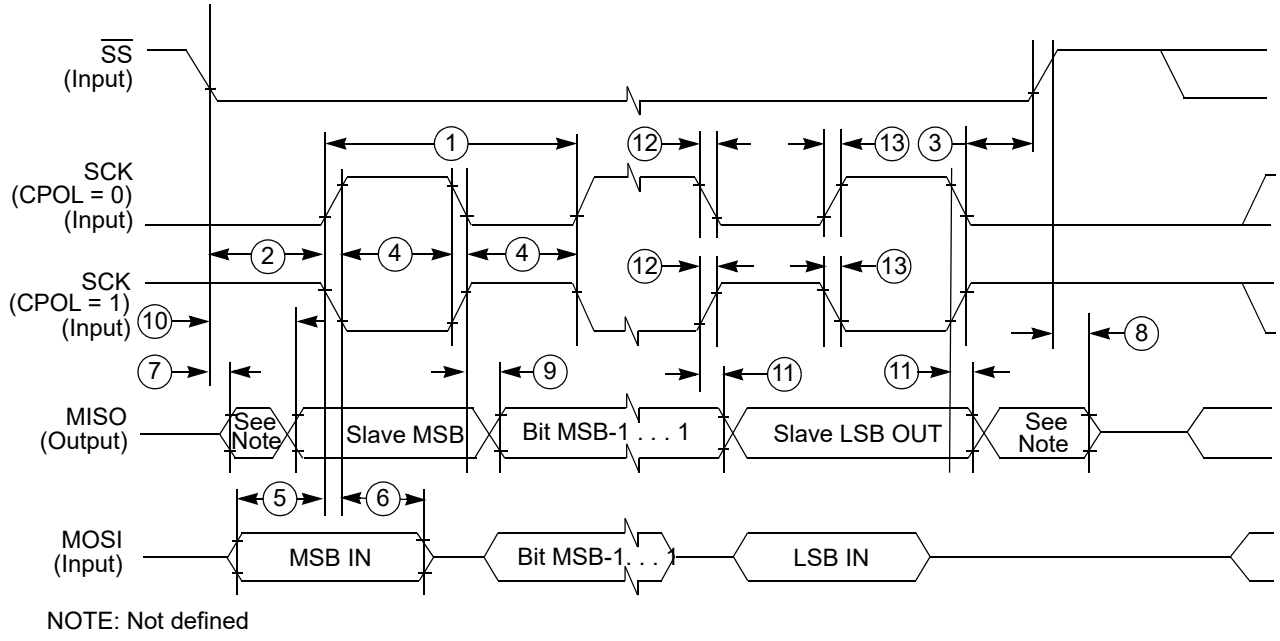

NOTE: Not defined

Figure A-9. SPI Slave Timing (CPHA = 0)

In Figure A-10 the timing diagram for slave mode with transmission format CPHA = 1 is depicted.

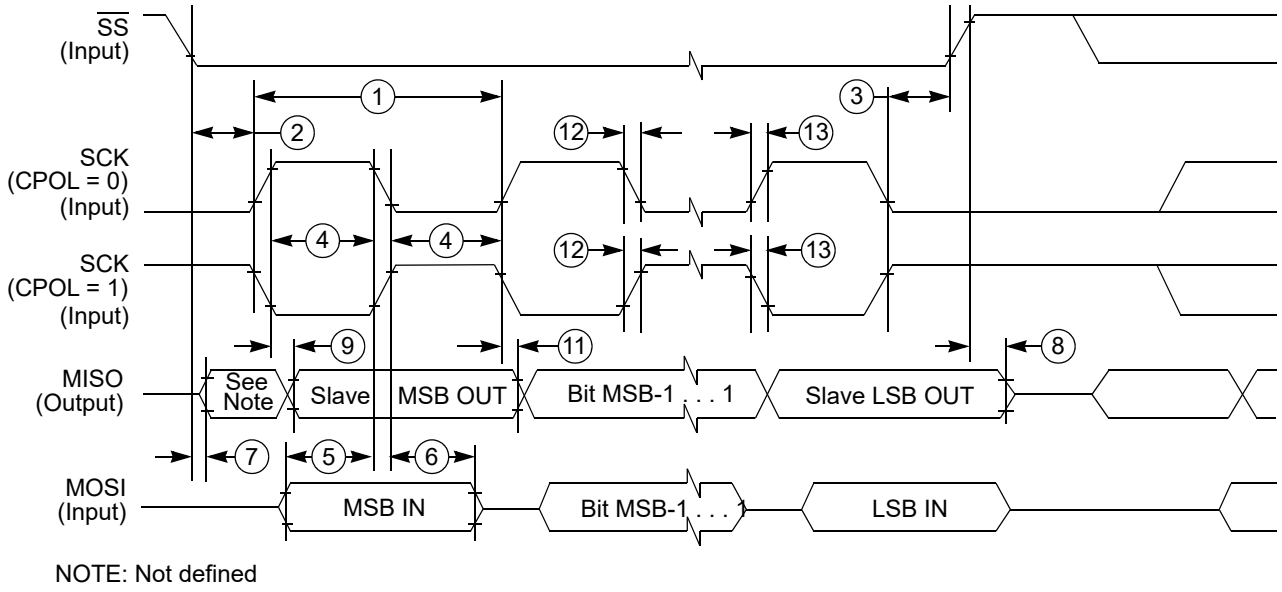

NOTE: Not defined

Figure A-10. SPI Slave Timing (CPHA = 1)

In Table A-53 the timing characteristics for slave mode are listed.

Table A-53. SPI Slave Mode Timing Characteristics

Conditions are 4.5 V < V_{DD35} < 5.5 V junction temperature from –40°C to T_{Jmax}.							
Num	**C**	**Characteristic**	**Symbol**	**Min**	**Typ**	**Max**	**Unit**
1	D	SCK Frequency	f_{sck}	DC	—	1/4	f_{bus}
1	D	SCK Period	t_{sck}	4	—	∞	t_{bus}
2	D	Enable Lead Time	t_L	4	—	—	t_{bus}
3	D	Enable Trail Time	t_T	4	—	—	t_{bus}
4	D	Clock (SCK) High or Low Time	t_{wsck}	4	—	—	t_{bus}
5	D	Data Setup Time (Inputs)	t_{su}	8	—	—	ns
6	D	Data Hold Time (Inputs)	t_{hi}	8	—	—	ns
7	D	Slave Access Time (time to data active)	t_a	—	—	20	ns
8	D	Slave MISO Disable Time	t_{dis}	—	—	22	ns
9	D	Data Valid after SCK Edge	t_{vsck}	—	—	$28 + 0.5 \cdot t_{bus}$ [1]	ns
10	D	Data Valid after $\overline{SS}$ fall	t_{vss}	—	—	$28 + 0.5 \cdot t_{bus}$ [1]	ns
11	D	Data Hold Time (Outputs)	t_{ho}	20	—	—	ns
12	D	Rise and Fall Time Inputs	t_{rfi}	—	—	9	ns
13	D	Rise and Fall Time Outputs	t_{rfo}	—	—	9	ns

[1] $0.5t_{bus}$ added due to internal synchronization delay

A.16 ADC Conversion Result Reference

The reference voltage V_{DDF} is measured under the conditions shown in Table A-54. The value stored in the IFR is the average of eight consecutive conversions at T_j=150 °C and eight consecutive conversions at T_j=-40 °C.

Table A-54. Measurement Conditions

Description	Symbol	Value	Unit
Regulator supply voltage	V_{DDR}	5	V
I/O supply voltage	V_{DDX}	5	V
Analog supply voltage	V_{DDA}	5	V
ADC reference voltage	V_{RH}	5	V
ADC clock	f_{ADCCLK}	2	MHz
ADC sample time	t_{SMP}	4	ADC clock cycles
Bus frequency	f_{bus}	24	MHz
Junction temperature	T_j	150 and -40	°C
Code execution		from RAM	

Table A-54. Measurement Conditions

Description	Symbol	Value	Unit
NVM activity		none	

Appendix B
Detailed Register Address Map

Revision History

Version Number	Revision Date	Description of Changes
Rev 0.05	30-Aug-2010	• Updated ADCCTL2 register in Appendix B, “Detailed Register Address Map”. • Updated CPMUOSC register in Appendix B, “Detailed Register Address Map”.
Rev 0.06	18-Oct-2010	• Updated ADC registers in Appendix B, “Detailed Register Address Map”.
Rev 0.07	9-Nov-2010	• Updated CPMU registers in Appendix B, “Detailed Register Address Map”.
Rev 0.08	4-Dec-2010	• Updated PIM registers in Appendix B, “Detailed Register Address Map”.
Rev 0.09	24-Apr-2012	• Typos and formatting

B.1 Detailed Register Map

The following tables show the detailed register map of the MC9S12G-Family.

NOTE

This is a summary of all register bits implemented on MC9S12G devices. Each member of the MC9S12G-Family implements the subset of registers, which is associated with its feature set (see Table 1-1).

0x0000–0x0009 Port Integration Module (PIM) Map 1 of 6

Address	Name		Bit 7	Bit 6	Bit 5	Bit 4	Bit 3	Bit 2	Bit 1	Bit 0
0x0000	PORTA	R	PA7	PA6	PA5	PA4	PA3	PA2	PA1	PA 0
		W								
0x0001	PORTB	R	PB7	PB6	PB5	PB4	PB3	PB2	PB1	PB0
		W								
0x0002	DDRA	R	DDRA7	DDRA6	DDRA5	DDRA4	DDRA3	DDRA2	DDRA1	DDRA0
		W								
0x0003	DDRB	R	DDRB7	DDRB6	DDRB5	DDRB4	DDRB3	DDRB2	DDRB1	DDRB0
		W								
0x0004	PORTC	R	PC7	PC6	PC5	PC4	PC3	PC2	PC1	PC0
		W								
0x0005	PORTD	R	PD7	PD6	PD5	PD4	PD3	PD2	PD1	PD0
		W								
0x0006	DDRC	R	DDRC7	DDRC6	DDRC5	DDRC4	DDRC3	DDRC2	DDRC1	DDRC0
		W								
0x0007	DDRD	R	DDRD7	DDRD6	DDRD5	DDRD4	DDRD3	DDRD2	DDRD1	DDRD0
		W								
0x0008	PORTE	R	0	0	0	0	0	0	PE1	PE0
		W								
0x0009	DDRE	R	0	0	0	0	0	0	DDRE1	DDRE0
		W								

0x000A–0x000B Memory Map Control (MMC) Map 1 of 2

Address	Name		Bit 7	Bit 6	Bit 5	Bit 4	Bit 3	Bit 2	Bit 1	Bit 0
0x000A	Reserved	R	0	0	0	0	0	0	0	0
		W								
0x000B	MODE	R	MODC	0	0	0	0	0	0	0
		W								

0x000C–0x000D Port Integration Module (PIM) Map 2 of 6

Address	Name		Bit 7	Bit 6	Bit 5	Bit 4	Bit 3	Bit 2	Bit 1	Bit 0
0x000C	PUCR	R	0	BKPUE	0	PDPEE	PUPDE	PUPCE	PUPBE	PUPAE
		W								
0x000D	Reserved	R	0	0	0	0	0	0	0	0
		W								

0x000E–0x000F Reserved

Address	Name		Bit 7	Bit 6	Bit 5	Bit 4	Bit 3	Bit 2	Bit 1	Bit 0
0x000E-0x000F	Reserved	R	0	0	0	0	0	0	0	0
		W								

0x0010–0x0017 Memory Map Control (MMC) Map 2 of 2

Address	Name		Bit 7	Bit 6	Bit 5	Bit 4	Bit 3	Bit 2	Bit 1	Bit 0
0x0010	Reserved	R	0	0	0	0	0	0	0	0
		W								
0x0011	DIRECT	R	DP15	DP14	DP13	DP12	DP11	DP10	DP9	DP8
		W								
0x0012	Reserved	R	0	0	0	0	0	0	0	0
		W								
0x0013	MMCCTL	R	0	0	0	0	0	0	0	NVMRES
		W								
0x0014	Reserved	R	0	0	0	0	0	0	0	0
		W								
0x0015	PPAGE	R	0	0	0	0	PIX3	PIX2	PIX1	PIX0
		W								
0x0016-0x0017	Reserved	R	0	0	0	0	0	0	0	0
		W								

0x0018–0x0019 Reserved

Address	Name		Bit 7	Bit 6	Bit 5	Bit 4	Bit 3	Bit 2	Bit 1	Bit 0
0x0018-0x0019	Reserved	R	0	0	0	0	0	0	0	0
		W								

0x001A–0x001B Device ID Register (PARTIDH/PARTIDL)

Address	Name		Bit 7	Bit 6	Bit 5	Bit 4	Bit 3	Bit 2	Bit 1	Bit 0
0x001A	PARTIDH	R	PARTIDH							
		W								
0x001B	PARTIDL	R	PARTIDL							
		W								

0x001C–0x001F Port Integration Module (PIM) Map 3 of 6

Address	Name		Bit 7	Bit 6	Bit 5	Bit 4	Bit 3	Bit 2	Bit 1	Bit 0
0x001C	ECLKCTL	R	NECLK	NCLKX2	DIV16	EDIV4	EDIV3	EDIV2	EDIV1	EDIV0
		W								
0x001D	Reserved	R	0	0	0	0	0	0	0	0
		W								
0x001E	IRQCR	R	IRQE	IRQEN	0	0	0	0	0	0
		W								
0x001F	Reserved	R	0	0	0	0	0	0	0	0
		W								

0x0020–0x002F Debug Module (DBG)

Address	Name		Bit 7	Bit 6	Bit 5	Bit 4	Bit 3	Bit 2	Bit 1	Bit 0
0x0020	DBGC1	R	ARM	0	0	BDM	DBGBRK	0	COMRV	
		W		TRIG						
0x0021	DBGSR	R	TBF	0	0	0	0	SSF2	SSF1	SSF0
		W								
0x0022	DBGTCR	R	0	TSOURCE	0	0	TRCMOD		0	TALIGN
		W								
0x0023	DBGC2	R	0	0	0	0	0	0	ABCM	
		W								
0x0024	DBGTBH	R	Bit 15	Bit 14	Bit 13	Bit 12	Bit 11	Bit 10	Bit 9	Bit 8
		W								
0x0025	DBGTBL	R	Bit 7	Bit 6	Bit 5	Bit 4	Bit 3	Bit 2	Bit 1	Bit 0
		W								
0x0026	DBGCNT	R	[1] TBF	0	CNT					
		W								
0x0027	DBGSCRX	R	0	0	0	0	SC3	SC2	SC1	SC0
		W								
	DBGMFR	R	0	0	0	0	0	MC2	MC1	MC0
		W								
	DBGACTL	R	SZE	SZ	TAG	BRK	RW	RWE	NDB	COMPE
		W								
0x0028	DBGBCTL	R	SZE	SZ	TAG	BRK	RW	RWE	0	COMPE
		W								
	DBGCCTL	R	0	0	TAG	BRK	RW	RWE	0	COMPE
		W								

0x0020–0x002F Debug Module (DBG)

Address	Name		Bit 7	Bit 6	Bit 5	Bit 4	Bit 3	Bit 2	Bit 1	Bit 0
0x0029	DBGXAH	R	0	0	0	0	0	0	Bit 17	Bit 16
		W								
0x002A	DBGXAM	R	Bit 15	14	13	12	11	10	9	Bit 8
		W								
0x002B	DBGXAL	R	Bit 7	6	5	4	3	2	1	Bit 0
		W								
0x002C	DBGADH	R	Bit 15	14	13	12	11	10	9	Bit 8
		W								
0x002D	DBGADL	R	Bit 7	6	5	4	3	2	1	Bit 0
		W								
0x002E	DBGADHM	R	Bit 15	14	13	12	11	10	9	Bit 8
		W								
0x002F	DBGADLM	R	Bit 7	6	5	4	3	2	1	Bit 0
		W								

0x0030–0x033 Reserved

Address	Name		Bit 7	Bit 6	Bit 5	Bit 4	Bit 3	Bit 2	Bit 1	Bit 0
0x0030-0x0033	Reserved	R	0	0	0	0	0	0	0	0
		W								

0x0034–0x003F Clock and Power Management (CPMU) Map 1 of 2

Address	Name		Bit 7	Bit 6	Bit 5	Bit 4	Bit 3	Bit 2	Bit 1	Bit 0
0x0034	CPMU SYNR	R	VCOFRQ[1:0]		SYNDIV[5:0]					
		W								
0x0035	CPMU REFDIV	R	REFFRQ[1:0]		0	0	REFDIV[3:0]			
		W								
0x0036	CPMU POSTDIV	R	0	0	0	POSTDIV[4:0]				
		W								
0x0037	CPMUFLG	R	RTIF	PORF	LVRF	LOCKIF	LOCK	ILAF	OSCIF	UPOSC
		W								
0x0038	CPMUINT	R	RTIE	0	0	LOCKIE	0	0	OSCIE	0
		W								
0x0039	CPMUCLKS	R	PLLSEL	PSTP	0	0	PRE	PCE	RTI OSCSEL	COP OSCSEL
		W								
0x003A	CPMUPLL	R	0	0	FM1	FM0	0	0	0	0
		W								
0x003B	CPMURTI	R	RTDEC	RTR6	RTR5	RTR4	RTR3	RTR2	RTR1	RTR0
		W								
0x003C	CPMUCOP	R	WCOP	RSBCK	0	0	0	CR2	CR1	CR0
		W			WRTMASK					

0x0034–0x003F Clock and Power Management (CPMU) Map 1 of 2

Address	Name		Bit 7	Bit 6	Bit 5	Bit 4	Bit 3	Bit 2	Bit 1	Bit 0
0x003D	Reserved	R	0	0	0	0	0	0	0	0
		W								
0x003E	Reserved	R	0	0	0	0	0	0	0	0
		W								
0x003F	CPMU ARMCOP	R	0	0	0	0	0	0	0	0
		W	Bit 7	Bit 6	Bit 5	Bit 4	Bit 3	Bit 2	Bit 1	Bit 0

0x0040–0x067 Timer Module (TIM)

Address	Name		Bit 7	Bit 6	Bit 5	Bit 4	Bit 3	Bit 2	Bit 1	Bit 0
0x0040	TIOS	R	IOS7	IOS6	IOS5	IOS4	IOS3	IOS2	IOS1	IOS0
		W								
0x0041	CFORC	R	0	0	0	0	0	0	0	0
		W	FOC7	FOC6	FOC5	FOC4	FOC3	FOC2	FOC1	FOC0
0x0042	OC7M	R	OC7M7	OC7M6	OC7M5	OC7M4	OC7M3	OC7M2	OC7M1	OC7M0
		W								
0x0043	OC7D	R	OC7D7	OC7D6	OC7D5	OC7D4	OC7D3	OC7D2	OC7D1	OC7D0
		W								
0x0044	TCNTH	R	TCNT15	TCNT14	TCNT13	TCNT12	TCNT11	TCNT10	TCNT9	TCNT8
		W								
0x0045	TCNTL	R	TCNT7	TCNT6	TCNT5	TCNT4	TCNT3	TCNT2	TCNT1	TCNT0
		W								
0x0046	TSCR1	R	TEN	TSWAI	TSFRZ	TFFCA	PRNT	0	0	0
		W								
0x0047	TTOV	R	TOV7	TOV6	TOV5	TOV4	TOV3	TOV2	TOV1	TOV0
		W								
0x0048	TCTL1	R	OM7	OL7	OM6	OL6	OM5	OL5	OM4	OL4
		W								
0x0049	TCTL2	R	OM3	OL3	OM2	OL2	OM1	OL1	OM0	OL0
		W								
0x004A	TCTL3	R	EDG7B	EDG7A	EDG6B	EDG6A	EDG5B	EDG5A	EDG4B	EDG4A
		W								
0x004B	TCTL4	R	EDG3B	EDG3A	EDG2B	EDG2A	EDG1B	EDG1A	EDG0B	EDG0A
		W								
0x004C	TIE	R	C7I	C6I	C5I	C4I	C3I	C2I	C1I	C0I
		W								
0x004D	TSCR2	R	TOI	0	0	0	TCRE	PR2	PR1	PR0
		W								
0x004E	TFLG1	R	C7F	C6F	C5F	C4F	C3F	C2F	C1F	C0F
		W								
0x004F	TFLG2	R	TOF	0	0	0	0	0	0	0
		W								

0x0040–0x067 Timer Module (TIM)

0x0050 – 0x005F	TCxH – TCxL	R	Bit 15	Bit 14	Bit 13	Bit 12	Bit 11	Bit 10	Bit 9	Bit 8
		W								
		R	Bit 7	Bit 6	Bit 5	Bit 4	Bit 3	Bit 2	Bit 1	Bit 0
		W								
0x0060	PACTL	R	0	PAEN	PAMOD	PEDGE	CLK1	CLK0	PAOVI	PAI
		W								
0x0061	PAFLG	R	0	0	0	0	0	0	PAOVF	PAIF
		W								
0x0062	PACNTH	R	PACNT15	PACNT14	PACNT13	PACNT12	PACNT11	PACNT10	PACNT9	PACNT8
		W								
0x0063	PACNTL	R	PACNT7	PACNT6	PACNT5	PACNT4	PACNT3	PACNT2	PACNT1	PACNT0
		W								
0x0064- 0x006B	Reserved	R								
		W								
0x006C	OCPD	R	OCPD7	OCPD6	OCPD5	OCPD4	OCPD3	OCPD2	OCPD1	OCPD0
		W								
0x006D	Reserved	R								
		W								
0x006E	PTPSR	R	PTPS7	PTPS6	PTPS5	PTPS4	PTPS3	PTPS2	PTPS1	PTPS0
		W								
0x006F	Reserved	R								
		W								

0x0070–0x09F Analog to Digital Converter (ADC)

Address	Name		Bit 7	Bit 6	Bit 5	Bit 4	Bit 3	Bit 2	Bit 1	Bit 0
0x0070	ATDCTL0	R	Reserved	0	0	0	WRAP3	WRAP2	WRAP1	WRAP0
		W								
0x0071	ATDCTL1	R	ETRIGSEL	SRES1	SRES0	SMP_DIS	ETRIGCH 3	ETRIGCH 2	ETRIGCH 1	ETRIGCH 0
		W								
0x0072	ATDCTL2	R	0	AFFC	Reseved	ETRIGLE	ETRIGP	ETRIGE	ASCIE	ACMPIE
		W								
0x0073	ATDCTL3	R	DJM	S8C	S4C	S2C	S1C	FIFO	FRZ1	FRZ0
		W								
0x0074	ATDCTL4	R	SMP2	SMP1	SMP0	PRS[4:0]				
		W								
0x0075	ATDCTL5	R	0	SC	SCAN	MULT	CD	CC	CB	CA
		W								
0x0076	ATDSTAT0	R	SCF	0	ETORF	FIFOR	CC3	CC2	CC1	CC0
		W								
0x0077	Reserved	R	0	0	0	0	0	0	0	0
		W								
0x0078	ATDCMPEH	R	CMPE[15:8]							
		W								
0x0079	ATDCMPEL	R	CMPE[7:0]							
		W								

0x0070–0x09F Analog to Digital Converter (ADC)

Address	Name		Bit 7	Bit 6	Bit 5	Bit 4	Bit 3	Bit 2	Bit 1	Bit 0
0x007A	ATDSTAT2H	R	CCF[15:8]							
		W								
0x007B	ATDSTAT2L	R	CCF[7:0]							
		W								
0x007C	ATDDIENH	R	IEN[15:8]							
		W								
0x007D	ATDDIENL	R	IEN[7:0]							
		W								
0x007E	ATDCMPHTH	R	CMPHT[15:8]							
		W								
0x007F	ATDCMPHTL	R	CMPHT[7:0]							
		W								
0x0080-0x0091	ATDDR0	R	See Section 16.3.2.12.1, “Left Justified Result Data (DJM=0)” and Section 16.3.2.12.2, “Right Justified Result Data (DJM=1)”							
		W								
0x0082-0x0083	ATDDR1	R	See Section 16.3.2.12.1, “Left Justified Result Data (DJM=0)” and Section 16.3.2.12.2, “Right Justified Result Data (DJM=1)”							
		W								
0x0084-0x0085	ATDDR2	R	See Section 16.3.2.12.1, “Left Justified Result Data (DJM=0)” and Section 16.3.2.12.2, “Right Justified Result Data (DJM=1)”							
		W								
0x0086-0x0087	ATDDR3	R	See Section 16.3.2.12.1, “Left Justified Result Data (DJM=0)” and Section 16.3.2.12.2, “Right Justified Result Data (DJM=1)”							
		W								
0x0088-0x0089	ATDDR4	R	See Section 16.3.2.12.1, “Left Justified Result Data (DJM=0)” and Section 16.3.2.12.2, “Right Justified Result Data (DJM=1)”							
		W								
0x008A-0x008B	ATDDR5	R	See Section 16.3.2.12.1, “Left Justified Result Data (DJM=0)” and Section 16.3.2.12.2, “Right Justified Result Data (DJM=1)”							
		W								
0x008C-0x008D	ATDDR6	R	See Section 16.3.2.12.1, “Left Justified Result Data (DJM=0)” and Section 16.3.2.12.2, “Right Justified Result Data (DJM=1)”							
		W								
0x008E-0x008F	ATDDR7	R	See Section 16.3.2.12.1, “Left Justified Result Data (DJM=0)” and Section 16.3.2.12.2, “Right Justified Result Data (DJM=1)”							
		W								
0x0090-0x0091	ATDDR8	R	See Section 16.3.2.12.1, “Left Justified Result Data (DJM=0)” and Section 16.3.2.12.2, “Right Justified Result Data (DJM=1)”							
		W								
0x0092-0x0093	ATDDR9	R	See Section 16.3.2.12.1, “Left Justified Result Data (DJM=0)” and Section 16.3.2.12.2, “Right Justified Result Data (DJM=1)”							
		W								
0x0094-0x0095	ATDDR10	R	See Section 16.3.2.12.1, “Left Justified Result Data (DJM=0)” and Section 16.3.2.12.2, “Right Justified Result Data (DJM=1)”							
		W								
0x0096-0x0097	ATDDR11	R	See Section 16.3.2.12.1, “Left Justified Result Data (DJM=0)” and Section 16.3.2.12.2, “Right Justified Result Data (DJM=1)”							
		W								
0x0098-0x0099	ATDDR12	R	See Section 16.3.2.12.1, “Left Justified Result Data (DJM=0)” and Section 16.3.2.12.2, “Right Justified Result Data (DJM=1)”							
		W								
0x009A-0x009B	ATDDR13	R	See Section 16.3.2.12.1, “Left Justified Result Data (DJM=0)” and Section 16.3.2.12.2, “Right Justified Result Data (DJM=1)”							
		W								
0x009C-0x009D	ATDDR14	R	See Section 16.3.2.12.1, “Left Justified Result Data (DJM=0)” and Section 16.3.2.12.2, “Right Justified Result Data (DJM=1)”							
		W								
0x009E-0x009F	ATDDR15	R	See Section 16.3.2.12.1, “Left Justified Result Data (DJM=0)” and Section 16.3.2.12.2, “Right Justified Result Data (DJM=1)”							
		W								

0x00A0–0x0C7 Pulse-Width-Modulator (PWM)

Address	Name		Bit 7	Bit 6	Bit 5	Bit 4	Bit 3	Bit 2	Bit 1	Bit 0
0x00A0	PWME	R	PWME7	PWME6	PWME5	PWME4	PWME3	PWME2	PWME1	PWME0
		W								
0x00A1	PWMPOL	R	PPOL7	PPOL6	PPOL5	PPOL4	PPOL3	PPOL2	PPOL1	PPOL0
		W								
0x00A2	PWMCLK	R	PCLK7	PCLKL6	PCLK5	PCLK4	PCLK3	PCLK2	PCLK1	PCLK0
		W								
0x00A3	PWMPRCLK	R	0	PCKB2	PCKB1	PCKB0	0	PCKA2	PCKA1	PCKA0
		W								
0x00A4	PWMCAE	R	CAE7	CAE6	CAE5	CAE4	CAE3	CAE2	CAE1	CAE0
		W								
0x00A5	PWMCTL	R	CON67	CON45	CON23	CON01	PSWAI	PFRZ	0	0
		W								
0x00A6	PWMCLKAB	R	PCLKAB7	PCLKAB6	PCLKAB5	PCLKAB4	PCLKAB3	PCLKAB2	PCLKAB1	PCLKAB0
		W								
0x00A7	Reserved	R	0	0	0	0	0	0	0	0
		W								
0x00A8	PWMSCLA	R	Bit 7	6	5	4	3	2	1	Bit 0
		W								
0x00A9	PWMSCLB	R	Bit 7	6	5	4	3	2	1	Bit 0
		W								
0x00AA - 0x00AB	Reserved	R	0	0	0	0	0	0	0	0
		W								
0x00AC	PWMCNT0	R	Bit 7	6	5	4	3	2	1	Bit 0
		W	0	0	0	0	0	0	0	0
0x00AD	PWMCNT1	R	Bit 7	6	5	4	3	2	1	Bit 0
		W	0	0	0	0	0	0	0	0
0x00AE	PWMCNT2	R	Bit 7	6	5	4	3	2	1	Bit 0
		W	0	0	0	0	0	0	0	0
0x00AF	PWMCNT3	R	Bit 7	6	5	4	3	2	1	Bit 0
		W	0	0	0	0	0	0	0	0
0x0B0	PWMCNT4	R	Bit 7	6	5	4	3	2	1	Bit 0
		W	0	0	0	0	0	0	0	0
0x00B1	PWMCNT5	R	Bit 7	6	5	4	3	2	1	Bit 0
		W	0	0	0	0	0	0	0	0
0x00B2	PWMCNT6	R	Bit 7	6	5	4	3	2	1	Bit 0
		W	0	0	0	0	0	0	0	0
0x00B3	PWMCNT7	R	Bit 7	6	5	4	3	2	1	Bit 0
		W	0	0	0	0	0	0	0	0
0x00B4	PWMPER0	R	Bit 7	6	5	4	3	2	1	Bit 0
		W								
0x00B5	PWMPER1	R	Bit 7	6	5	4	3	2	1	Bit 0
		W								
0x00B6	PWMPER2	R	Bit 7	6	5	4	3	2	1	Bit 0
		W								

0x00A0–0x0C7 Pulse-Width-Modulator (PWM)

0x00B7	PWMPER3	R W	Bit 7	6	5	4	3	2	1	Bit 0
0x00B8	PWMPER4	R W	Bit 7	6	5	4	3	2	1	Bit 0
0x00B9	PWMPER5	R W	Bit 7	6	5	4	3	2	1	Bit 0
0x00BA	PWMPER6	R W	Bit 7	6	5	4	3	2	1	Bit 0
0x00BB	PWMPER7	R W	Bit 7	6	5	4	3	2	1	Bit 0
0x00BC	PWMDTY0	R W	Bit 7	6	5	4	3	2	1	Bit 0
0x00BD	PWMDTY1	R W	Bit 7	6	5	4	3	2	1	Bit 0
0x00BE	PWMDTY2	R W	Bit 7	6	5	4	3	2	1	Bit 0
0x00BF	PWMDTY3	R W	Bit 7	6	5	4	3	2	1	Bit 0
0x00C0	PWMDTY4	R W	Bit 7	6	5	4	3	2	1	Bit 0
0x00C1	PWMDTY5	R W	Bit 7	6	5	4	3	2	1	Bit 0
0x00C2	PWMDTY6	R W	Bit 7	6	5	4	3	2	1	Bit 0
0x00C3	PWMDTY7	R W	Bit 7	6	5	4	3	2	1	Bit 0
0x00C4- 0x00C7	Reserved	R W	0	0	0	0	0	0	0	0

0x00C8–0x0CF Serial Communication Interface (SCI0)

Address	Name		Bit 7	Bit 6	Bit 5	Bit 4	Bit 3	Bit 2	Bit 1	Bit 0
0x00C8	SCI0BDH	R W	IREN	TNP1	TNP0	SBR12	SBR11	SBR10	SBR9	SBR8
0x00C8	SCI0ASR1	R W	RXEDGIF	0	0	0	0	BERRV	BERRIF	BKDIF
0x00C9	SCI0BDL	R W	SBR7	SBR6	SBR5	SBR4	SBR3	SBR2	SBR1	SBR0
0x00C9	SCI0ACR1	R W	RXEDGIE	0	0	0	0	0	BERRIE	BKDIE
0x00CA	SCI0CR1	R W	LOOPS	SCISWAI	RSRC	M	WAKE	ILT	PE	PT
0x00CA	SCI0ACR2	R W	0	0	0	0	0	BERRM1	BERRM0	BKDFE
0x00CB	SCI0CR2	R W	TIE	TCIE	RIE	ILIE	TE	RE	RWU	SBK

0x00C8–0x0CF Serial Communication Interface (SCI0)

0x00CC	SCI0SR1	R	TDRE	TC	RDRF	IDLE	OR	NF	FE	PF
		W								
0x00CD	SCI0SR2	R	AMAP	0	0	TXPOL	RXPOL	BRK13	TXDIR	RAF
		W								
0x00CE	SCI0DRH	R	R8	T8	0	0	0	0	0	0
		W								
0x00CF	SCI0DRL	R	R7	R6	R5	R4	R3	R2	R1	R0
		W	T7	T6	T5	T4	T3	T2	T1	T0

0x00D0–0x0D7 Serial Communication Interface (SCI1)

Address	Name		Bit 7	Bit 6	Bit 5	Bit 4	Bit 3	Bit 2	Bit 1	Bit 0
0x00D0	SCI1BDH	R	IREN	TNP1	TNP0	SBR12	SBR11	SBR10	SBR9	SBR8
		W								
0x00D0	SCI1ASR1	R	RXEDGIF	0	0	0	0	BERRV	BERRIF	BKDIF
		W								
0x00D1	SCI1BDL	R	SBR7	SBR6	SBR5	SBR4	SBR3	SBR2	SBR1	SBR0
		W								
0x00D1	SCI1ACR1	R	RXEDGIE	0	0	0	0	0	BERRIE	BKDIE
		W								
0x00D2	SCI1CR1	R	LOOPS	SCISWAI	RSRC	M	WAKE	ILT	PE	PT
		W								
0x00D2	SCI1ACR2	R	0	0	0	0	0	BERRM1	BERRM0	BKDFE
		W								
0x00D3	SCI1CR2	R	TIE	TCIE	RIE	ILIE	TE	RE	RWU	SBK
		W								
0x00D4	SCI1SR1	R	TDRE	TC	RDRF	IDLE	OR	NF	FE	PF
		W								
0x00D5	SCI1SR2	R	AMAP	0	0	TXPOL	RXPOL	BRK13	TXDIR	RAF
		W								
0x00D6	SCI1DRH	R	R8	T8	0	0	0	0	0	0
		W								
0x00D7	SCI1DRL	R	R7	R6	R5	R4	R3	R2	R1	R0
		W	T7	T6	T5	T4	T3	T2	T1	T0

0x00D8–0x0DF Serial Peripheral Interface (SPI0)

Address	Name		Bit 7	Bit 6	Bit 5	Bit 4	Bit 3	Bit 2	Bit 1	Bit 0
0x00D8	SPI0CR1	R	SPIE	SPE	SPTIE	MSTR	CPOL	CPHA	SSOE	LSBFE
		W								
0x00D9	SPI0CR2	R	0	XFRW	0	MODFEN	BIDIROE	0	SPISWAI	SPC0
		W								
0x00DA	SPI0BR	R	0	SPPR2	SPPR1	SPPR0	0	SPR2	SPR1	SPR0
		W								
0x00DB	SPI0SR	R	SPIF	0	SPTEF	MODF	0	0	0	0
		W								

0x00D8–0x0DF Serial Peripheral Interface (SPI0)

0x00DC	SPI0DRH	R	R15	R14	R13	R12	R11	R10	R9	R8
		W	T15	T14	T13	T12	T11	T10	T9	T8
0x00DD	SPI0DRL	R	R7	R6	R5	R4	R3	R2	R1	R0
		W	T7	T6	T5	T4	T3	T2	T1	T0
0x00DE-0x00DF	Reserved	R								
		W								

0x00E0–0x0E7 Reserved

Address	Name		Bit 7	Bit 6	Bit 5	Bit 4	Bit 3	Bit 2	Bit 1	Bit 0
0x00E0-0x00E7	Reserved	R	0	0	0	0	0	0	0	0
		W								

0x00E8–0x0EF Serial Communication Interface (SCI2)

Address	Name		Bit 7	Bit 6	Bit 5	Bit 4	Bit 3	Bit 2	Bit 1	Bit 0
0x00E8	SCI2BDH	R	IREN	TNP1	TNP0	SBR12	SBR11	SBR10	SBR9	SBR8
		W								
0x00E8	SCI2ASR1	R	RXEDGIF	0	0	0	0	BERRV	BERRIF	BKDIF
		W								
0x00E9	SCI2BDL	R	SBR7	SBR6	SBR5	SBR4	SBR3	SBR2	SBR1	SBR0
		W								
0x00E9	SCI2ACR1	R	RXEDGIE	0	0	0	0	0	BERRIE	BKDIE
		W								
0x00EA	SCI2CR1	R	LOOPS	SCISWAI	RSRC	M	WAKE	ILT	PE	PT
		W								
0x00EA	SCI2ACR2	R	0	0	0	0	0	BERRM1	BERRM0	BKDFE
		W								
0x00EB	SCI2CR2	R	TIE	TCIE	RIE	ILIE	TE	RE	RWU	SBK
		W								
0x00EC	SCI2SR1	R	TDRE	TC	RDRF	IDLE	OR	NF	FE	PF
		W								
0x00ED	SCI2SR2	R	AMAP	0	0	TXPOL	RXPOL	BRK13	TXDIR	RAF
		W								
0x00EE	SCI2DRH	R	R8	T8	0	0	0	0	0	0
		W								
0x00EF	SCI2DRL	R	R7	R6	R5	R4	R3	R2	R1	R0
		W	T7	T6	T5	T4	T3	T2	T1	T0

0x00F0–0x0F7 Serial Peripheral Interface (SPI1)

Address	Name		Bit 7	Bit 6	Bit 5	Bit 4	Bit 3	Bit 2	Bit 1	Bit 0
0x00F0	SPI1CR1	R	SPIE	SPE	SPTIE	MSTR	CPOL	CPHA	SSOE	LSBFE
		W								
0x00F1	SPI1CR2	R	0	XFRW	0	MODFEN	BIDIROE	0	SPISWAI	SPC0
		W								

0x00F0–0x00F7 Serial Peripheral Interface (SPI1)

0x00F2	SPI1BR	R	0	SPPR2	SPPR1	SPPR0	0	SPR2	SPR1	SPR0
		W								
0x00F3	SPI1SR	R	SPIF	0	SPTEF	MODF	0	0	0	0
		W								
0x00F4	SPI1DRH	R	R15	R14	R13	R12	R11	R10	R9	R8
		W	T15	T14	T13	T12	T11	T10	T9	T8
0x00F5	SPI1DRL	R	R7	R6	R5	R4	R3	R2	R1	R0
		W	T7	T6	T5	T4	T3	T2	T1	T0
0x00F6-0x00F7	Reserved	R								
		W								

0x00F8–0x00FF Serial Peripheral Interface (SPI2)

Address	Name		Bit 7	Bit 6	Bit 5	Bit 4	Bit 3	Bit 2	Bit 1	Bit 0
0x00F8	SPI2CR1	R	SPIE	SPE	SPTIE	MSTR	CPOL	CPHA	SSOE	LSBFE
		W								
0x00F9	SPI2CR2	R	0	XFRW	0	MODFEN	BIDIROE	0	SPISWAI	SPC0
		W								
0x00FA	SPI2BR	R	0	SPPR2	SPPR1	SPPR0	0	SPR2	SPR1	SPR0
		W								
0x00FB	SPI2SR	R	SPIF	0	SPTEF	MODF	0	0	0	0
		W								
0x00FC	SPI2DRH	R	R15	R14	R13	R12	R11	R10	R9	R8
		W	T15	T14	T13	T12	T11	T10	T9	T8
0x00FD	SPI2DRL	R	R7	R6	R5	R4	R3	R2	R1	R0
		W	T7	T6	T5	T4	T3	T2	T1	T0
0x00FE-0x00FF	Reserved	R								
		W								

0x0100–0x0113 Flash Module (FTMRG)

Address	Name		Bit 7	Bit 6	Bit 5	Bit 4	Bit 3	Bit 2	Bit 1	Bit 0
0x0100	FCLKDIV	R	FDIVLD	FDIVLCK	FDIV5	FDIV4	FDIV3	FDIV2	FDIV1	FDIV0
		W								
0x0101	FSEC	R	KEYEN1	KEYEN0	RNV5	RNV4	RNV3	RNV2	SEC1	SEC0
		W								
0x0102	FCCOBIX	R	0	0	0	0	0	CCOBIX2	CCOBIX1	CCOBIX0
		W								
0x0103	Reserved	R	0	0	0	0	0	0	0	0
		W								
0x0104	FCNFG	R	CCIE	0	0	IGNSF	0	0	FDFD	FSFD
		W								
0x0105	FERCNFG	R	0	0	0	0	0	0	DFDIE	SFDIE
		W								
0x0106	FSTAT	R	CCIF	0	ACCERR	FPVIOL	MGBUSY	RSVD	MGSTAT1	MGSTAT0
		W								

0x0100–0x0113 Flash Module (FTMRG)

Address	Name		Bit 7	Bit 6	Bit 5	Bit 4	Bit 3	Bit 2	Bit 1	Bit 0
0x0107	FERSTAT	R	0	0	0	0	0	0	DFDIF	SFDIF
		W								
0x0108	FPROT	R	FPOPEN	RNV6	FPHDIS	FPHS1	FPHS0	FPLDIS	FPLS1	FPLS0
		W								
0x0109	DFPROT	R	DPOPEN	0	0	0	DPS3	DPS2	DPS1	DPS0
		W								
0x010A	FCCOBHI	R	CCOB15	CCOB14	CCOB13	CCOB12	CCOB11	CCOB10	CCOB9	CCOB8
		W								
0x010B	FCCOBLO	R	CCOB7	CCOB6	CCOB5	CCOB4	CCOB3	CCOB2	CCOB1	CCOB0
		W								
0x010C	Reserved	R	0	0	0	0	0	0	0	0
		W								
0x010D	Reserved	R	0	0	0	0	0	0	0	0
		W								
0x010E	Reserved	R	0	0	0	0	0	0	0	0
		W								
0x010F	Reserved	R	0	0	0	0	0	0	0	0
		W								
0x0110	FOPT	R	NV7	NV6	NV5	NV4	NV3	NV2	NV1	NV0
		W								
0x0111	Reserved	R	0	0	0	0	0	0	0	0
		W								
0x0112	Reserved	R	0	0	0	0	0	0	0	0
		W								
0x0113	Reserved	R	0	0	0	0	0	0	0	0
		W								

0x0114–0x11F Reserved

Address	Name		Bit 7	Bit 6	Bit 5	Bit 4	Bit 3	Bit 2	Bit 1	Bit 0
0x0114-0x011F	Reserved	R	0	0	0	0	0	0	0	0
		W								

0x0120 Interrupt Module (INT)

Address	Name		Bit 7	Bit 6	Bit 5	Bit 4	Bit 3	Bit 2	Bit 1	Bit 0
0x0120	IVBR	R	IVB_ADDR[7:0]							
		W								

0x0121–0x13F Reserved

Address	Name		Bit 7	Bit 6	Bit 5	Bit 4	Bit 3	Bit 2	Bit 1	Bit 0
0x0121-0x013F	Reserved	R	0	0	0	0	0	0	0	0
		W								

0x0140–0x017F CAN Controller (MSCAN)

Address	Name		Bit 7	Bit 6	Bit 5	Bit 4	Bit 3	Bit 2	Bit 1	Bit 0
0x0140	CANCTL0	R	RXFRM	RXACT	CSWAI	SYNCH	TIME	WUPE	SLPRQ	INITRQ
		W								
0x0141	CANCTL1	R	CANE	CLKSRC	LOOPB	LISTEN	BORM	WUPM	SLPAK	INITAK
		W								
0x0142	CANBTR0	R	SJW1	SJW0	BRP5	BRP4	BRP3	BRP2	BRP1	BRP0
		W								
0x0143	CANBTR1	R	SAMP	TSEG22	TSEG21	TSEG20	TSEG13	TSEG12	TSEG11	TSEG10
		W								
0x0144	CANRFLG	R	WUPIF	CSCIF	RSTAT1	RSTAT0	TSTAT1	TSTAT0	OVRIF	RXF
		W								
0x0145	CANRIER	R	WUPIE	CSCIE	RSTATE1	RSTATE0	TSTATE1	TSTATE0	OVRIE	RXFIE
		W								
0x0146	CANTFLG	R	0	0	0	0	0	TXE2	TXE1	TXE0
		W								
0x0147	CANTIER	R	0	0	0	0	0	TXEIE2	TXEIE1	TXEIE0
		W								
0x0148	CANTARQ	R	0	0	0	0	0	ABTRQ2	ABTRQ1	ABTRQ0
		W								
0x0149	CANTAAK	R	0	0	0	0	0	ABTAK2	ABTAK1	ABTAK0
		W								
0x014A	CANTBSEL	R	0	0	0	0	0	TX2	TX1	TX0
		W								
0x014B	CANIDAC	R	0	0	IDAM1	IDAM0	0	IDHIT2	IDHIT1	IDHIT0
		W								
0x014C	Reserved	R	0	0	0	0	0	0	0	0
		W								
0x014D	CANMISC	R	0	0	0	0	0	0	0	BOHOLD
		W								
0x014E	CANRXERR	R	RXERR7	RXERR6	RXERR5	RXERR4	RXERR3	RXERR2	RXERR1	RXERR0
		W								
0x014F	CANTXERR	R	TXERR7	TXERR6	TXERR5	TXERR4	TXERR3	TXERR2	TXERR1	TXERR0
		W								
0x0150-0x0153	CANIDAR0–3	R	AC7	AC6	AC5	AC4	AC3	AC2	AC1	AC0
		W								
0x0154-0x0157	CANIDMRx	R	AM7	AM6	AM5	AM4	AM3	AM2	AM1	AM0
		W								
0x0158-0x015B	CANIDAR4–7	R	AC7	AC6	AC5	AC4	AC3	AC2	AC1	AC0
		W								
0x015C-0x015F	CANIDMR4–7	R	AM7	AM6	AM5	AM4	AM3	AM2	AM1	AM0
		W								
0x0160-0x016F	CANRXFG	R	See Section 18.3.3, “Programmer’s Model of Message Storage”							
		W								
0x0170-0x017F	CANTXFG	R	See Section 18.3.3, “Programmer’s Model of Message Storage”							
		W								

0x0180–0x023F Reserved

Address	Name		Bit 7	Bit 6	Bit 5	Bit 4	Bit 3	Bit 2	Bit 1	Bit 0
0x0180-0x023F	Reserved	R	0	0	0	0	0	0	0	0
		W								

0x0240–0x025F Port Integration Module (PIM) Map 4 of 6

Address	Name		Bit 7	Bit 6	Bit 5	Bit 4	Bit 3	Bit 2	Bit 1	Bit 0
0x0240	PTT	R	PTT7	PTT6	PTT5	PTT4	PTT3	PTT2	PTT1	PTT0
		W								
0x0241	PTIT	R	PTIT7	PTIT6	PTIT5	PTIT4	PTIT3	PTIT2	PTIT1	PTIT0
		W								
0x0242	DDRT	R	DDRT7	DDRT6	DDRT5	DDRT4	DDRT3	DDRT2	DDRT1	DDRT0
		W								
0x0243	Reserved	R	0	0	0	0	0	0	0	0
		W								
0x0244	PERT	R	PERT7	PERT6	PERT5	PERT4	PERT3	PERT2	PERT1	PERT0
		W								
0x0245	PPST	R	PPST7	PPST6	PPST5	PPST4	PPST3	PPST2	PPST1	PPST0
		W								
0x0246-0x0247	Reserved	R	0	0	0	0	0	0	0	0
		W								
0x0248	PTS	R	PTS7	PTS6	PTS5	PTS4	PTS3	PTS2	PTS1	PTS0
		W								
0x0249	PTIS	R	PTIS7	PTIS6	PTIS5	PTIS4	PTIS3	PTIS2	PTIS1	PTIS0
		W								
0x024A	DDRS	R	DDRS7	DDRS6	DDRS5	DDRS4	DDRS3	DDRS2	DDRS1	DDRS0
		W								
0x024B	Reserved	R	0	0	0	0	0	0	0	0
		W								
0x024C	PERS	R	PERS7	PERS6	PERS5	PERS4	PERS3	PERS2	PERS1	PERS0
		W								
0x024D	PPSS	R	PPSS7	PPSS6	PPSS5	PPSS4	PPSS3	PPSS2	PPSS1	PPSS0
		W								
0x024E	WOMS	R	WOMS7	WOMS6	WOMS5	WOMS4	WOMS3	WOMS2	WOMS1	WOMS0
		W								
0x024F	PRR0	R	PRR0P3	PRR0P2	PRR0T31	PRR0T30	PRR0T21	PRR0T20	PRR0S1	PRR0S0
		W								
0x0250	PTM	R	0	0	0	0	PTM3	PTM2	PTM1	PTM0
		W								
0x0251	PTIM	R	0	0	0	0	PTIM3	PTIM2	PTIM1	PTIM0
		W								
0x0252	DDRM	R	0	0	0	0	DDRM3	DDRM2	DDRM1	DDRM0
		W								
0x0253	Reserved	R	0	0	0	0	0	0	0	0
		W								

0x0240–0x025F Port Integration Module (PIM) Map 4 of 6

Address	Name		Bit 7	Bit 6	Bit 5	Bit 4	Bit 3	Bit 2	Bit 1	Bit 0
0x0254	PERM	R	0	0	0	0	PERM3	PERM2	PERM1	PERM0
		W								
0x0255	PPSM	R	0	0	0	0	PPSM3	PPSM2	PPSM1	PPSM0
		W								
0x0256	WOMM	R	0	0	0	0	WOMM3	WOMM2	WOMM1	WOMM0
		W								
0x0257	PKGCR	R	APICLKS7	0	0	0	0	PKGCR2	PKGCR1	PKGCR0
		W								
0x0258	PTP	R	PTP7	PTP6	PTP5	PTP4	PTP3	PTP2	PTP1	PTP0
		W								
0x0259	PTIP	R	PTIP7	PTIP6	PTIP5	PTIP4	PTIP3	PTIP2	PTIP1	PTIP0
		W								
0x025A	DDRP	R	DDRP7	DDRP6	DDRP5	DDRP4	DDRP3	DDRP2	DDRP1	DDRP0
		W								
0x025B	Reserved	R	0	0	0	0	0	0	0	0
		W								
0x025C	PERP	R	PERP7	PERP6	PERP5	PERP4	PERP3	PERP2	PERP1	PERP0
		W								
0x025D	PPSP	R	PPSP7	PPSP6	PPSP5	PPSP4	PPSP3	PPSP2	PPSP1	PPSP0
		W								
0x025E	PIEP	R	PIEP7	PIEP6	PIEP5	PIEP4	PIEP3	PIEP2	PIEP1	PIEP0
		W								
0x025F	PIFP	R	PIFP7	PIFP6	PIFP5	PIFP4	PIFP3	PIFP2	PIFP1	PIFP0
		W								

0x0260–0x0261 Analog Comparator(ACMP)

Address	Name		Bit 7	Bit 6	Bit 5	Bit 4	Bit 3	Bit 2	Bit 1	Bit 0
		W								
0x0260	ACMPC	R	ACIE	ACOPE	ACICE	0	ACMOD1	ACMOD0	0	ACE
		W								
0x0261	ACMPS	R	ACIF	ACO	0	0	0	0	0	0
		W								

0x0262–0x0275 Port Integration Module (PIM) Map 5 of 6

Address	Name		Bit 7	Bit 6	Bit 5	Bit 4	Bit 3	Bit 2	Bit 1	Bit 0
0x0262-0x0267	Reserved	R	0	0	0	0	0	0	0	0
		W								
0x0267	Reserved	R	Reserved	Reserved	0	0	0	0	0	Reserved
		W								
0x0268	PTJ	R	PTJ7	PTJ6	PTJ5	PTJ4	PTJ3	PTJ2	PTJ1	PTJ0
		W								
0x0269	PTIJ	R	PTIJ7	PTIJ6	PTIJ5	PTIJ4	PTIJ3	PTIJ2	PTIJ1	PTIJ0
		W								

0x0262–0x0275 Port Integration Module (PIM) Map 5 of 6

Address	Name		Bit 7	Bit 6	Bit 5	Bit 4	Bit 3	Bit 2	Bit 1	Bit 0
0x026A	DDRJ	R	DDRJ7	DDRJ6	DDRJ5	DDRJ4	DDRJ3	DDRJ2	DDRJ1	DDRJ0
		W								
0x026B	Reserved	R	0	0	0	0	0	0	0	0
		W								
0x026C	PERJ	R	PERJ7	PERJ6	PERJ5	PERJ4	PERJ3	PERJ2	PERJ1	PERJ0
		W								
0x026D	PPSJ	R	PPSJ7	PPSJ6	PPSJ5	PPSJ4	PPSJ3	PPSJ2	PPSJ1	PPSJ0
		W								
0x026E	PIEJ	R	PIEJ7	PIEJ6	PIEJ5	PIEJ4	PIEJ3	PIEJ2	PIEJ1	PIEJ0
		W								
0x026F	PIFJ	R	PIFJ7	PIFJ6	PIFJ5	PIFJ4	PIFJ3	PIFJ2	PIFJ1	PIFJ0
		W								
0x0270	PT0AD	R	PT0AD7	PT0AD6	PT0AD5	PT0AD4	PT0AD3	PT0AD2	PT0AD1	PT0AD0
		W								
0x0271	PT1AD	R	PT1AD7	PT1AD6	PT1AD5	PT1AD4	PT1AD3	PT1AD2	PT1AD1	PT1AD0
		W								
0x0272	PTI0AD	R	PTI0AD7	PTI0AD6	PTI0AD5	PTI0AD4	PTI0AD3	PTI0AD2	PTI0AD1	PTI0AD0
		W								
0x0273	PTI1AD	R	PTI1AD7	PTI1AD6	PTI1AD5	PTI1AD4	PTI1AD3	PTI1AD2	PTI1AD1	PTI1AD0
		W								
0x0274	DDR0AD	R	DDR0AD7	DDR0AD6	DDR0AD5	DDR0AD4	DDR0AD3	DDR0AD2	DDR0AD1	DDR0AD0
		W								
0x0275	DDR1AD	R	DDR1AD7	DDR1AD6	DDR1AD5	DDR1AD4	DDR1AD3	DDR1AD2	DDR1AD1	DDR1AD0
		W								

0x0276 Reference Voltage Attenuator (RVA)

Address	Name		Bit 7	Bit 6	Bit 5	Bit 4	Bit 3	Bit 2	Bit 1	Bit 0
0x0276	RVACTL	R	0	0	0	0	0	0	0	RVAON
		W								

0x0277–0x027F Port Integration Module (PIM) Map 6 of 6

Address	Name		Bit 7	Bit 6	Bit 5	Bit 4	Bit 3	Bit 2	Bit 1	Bit 0
0x0277	PRR1	R	0	0	0	0	0	0	0	PRR1AN
		W								
0x0278	PER0AD	R	PER0AD7	PER0AD6	PER0AD5	PER0AD4	PER0AD3	PER0AD2	PER0AD1	PER0AD0
		W								
0x0279	PER1AD	R	PER1AD7	PER1AD6	PER1AD5	PER1AD4	PER1AD3	PER1AD2	PER1AD1	PER1AD0
		W								
0x027A	PPS0AD	R	PPS0AD7	PPS0AD6	PPS0AD5	PPS0AD4	PPS0AD3	PPS0AD2	PPS0AD1	PPS0AD0
		W								
0x027B	PPS1AD	R	PPS1AD7	PPS1AD6	PPS1AD5	PPS1AD4	PPS1AD3	PPS1AD2	PPS1AD1	PPS1AD0
		W								

0x0277–0x027F Port Integration Module (PIM) Map 6 of 6

Address	Name		Bit 7	Bit 6	Bit 5	Bit 4	Bit 3	Bit 2	Bit 1	Bit 0
0x027C	PIE0AD	R	PIE0AD7	PIE0AD6	PIE0AD5	PIE0AD4	PIE0AD3	PIE0AD2	PIE0AD1	PIE0AD0
		W								
0x027D	PIE1AD	R	PIE1AD7	PIE1AD6	PIE1AD5	PIE1AD4	PIE1AD3	PIE1AD2	PIE1AD1	PIE1AD0
		W								
0x027E	PIF0AD	R	PIF0AD7	PIF0AD6	PIF0AD5	PIF0AD4	PIF0AD3	PIF0AD2	PIF0AD1	PIF0AD0
		W								
0x027F	PIF1AD	R	PIF1AD7	PIF1AD6	PIF1AD5	PIF1AD4	PIF1AD3	PIF1AD2	PIF1AD1	PIF1AD0
		W								

0x0280–0x2EF Reserved

Address	Name		Bit 7	Bit 6	Bit 5	Bit 4	Bit 3	Bit 2	Bit 1	Bit 0
0x0280-0x02EF	Reserved	R	0	0	0	0	0	0	0	0
		W								

0x02F0–0x02FF Clock and Power Management (CPMU) Map 2 of 2

Address	Name		Bit 7	Bit 6	Bit 5	Bit 4	Bit 3	Bit 2	Bit 1	Bit 0
0x02F0	Reserved	R	0	0	0	0	0	0	0	0
		W								
0x02F1	CPMULVCTL	R	0	0	0	0	0	LVDS	LVIE	LVIF
		W								
0x02F2	CPMUAPICTL	R	APICLK	0	0	APIES	APIEA	APIFE	APIE	APIF
		W								
0x02F3	CPMUACLKTR	R	ACLKTR5	ACLKTR4	ACLKTR3	ACLKTR2	ACLKTR1	ACLKTR0	0	0
		W								
0x02F4	CPMUAPIRH	R	APIR15	APIR14	APIR13	APIR12	APIR11	APIR10	APIR9	APIR8
		W								
0x02F5	CPMUAPIRL	R	APIR7	APIR6	APIR5	APIR4	APIR3	APIR2	APIR1	APIR0
		W								
0x02F6	Reserved	R	0	0	0	0	0	0	0	0
		W								
0x02F7	Reserved	R	0	0	0	0	0	0	0	0
		W								
0x02F8	CPMU IRCTRIMH	R	TCTRIM[3:0]				0	0	IRCTRIM[9:8]	
		W								
0x02F9	CPMU IRCTRIML	R	IRCTRIM[7:0]							
		W								
0x02FA	CPMUOSC	R	OSCE	Reserved	OSCPINS_EN	Reserved				
		W								

0x02F0–0x02FF Clock and Power Management (CPMU) Map 2 of 2

0x02FB	CPMUPROT	R	0	0	0	0	0	0	0	PROT
		W								
0x02FC	Reserved	R	0	0	0	0	0	0	0	0
		W								
0x02FD-0x02FF	Reserved	R	0	0	0	0	0	0	0	0
		W								

0x0300–0x03BF Reserved

Address	Name		Bit 7	Bit 6	Bit 5	Bit 4	Bit 3	Bit 2	Bit 1	Bit 0
0x0300-0x03BF	Reserved	R	0	0	0	0	0	0	0	0
		W								

0x03C0–0x03C7 Digital to Analog Converter (DAC0)

Address	Name		Bit 7	Bit 6	Bit 5	Bit 4	Bit 3	Bit 2	Bit 1	Bit 0
0x03C0	DAC0CTL	R	FVR	Drive	0	0	0	Mode[2:0]		
		W								
0x03C1	Reserved	R	0	0	0	0	0	0	0	0
		W								
0x03C2	DAC0VOLTAGE	R	Voltage[7:0]							
		W								
0x03C3	Reserved	R	0	0	0	0	0	0	0	0
		W								
0x03C4	Reserved	R	0	0	0	0	0	0	0	0
		W								
0x03C5	Reserved	R	0	0	0	0	0	0	0	0
		W								
0x03C6	Reserved	R	0	0	0	0	0	0	0	0
		W								
0x03C7	Reserved	R	0	0	0	0	0	0	0	0
		W								

0x03C8–0x03CF Digital to Analog Converter (DAC1)

Address	Name		Bit 7	Bit 6	Bit 5	Bit 4	Bit 3	Bit 2	Bit 1	Bit 0
0x03C8	DAC1CTL	R	FVR	Drive	0	0	0	Mode[2:0]		
		W								
0x03C9	Reserved	R	0	0	0	0	0	0	0	0
		W								
0x03CA	DAC1VOLTAGE	R	Voltage[7:0]							
		W								
0x03CB	Reserved	R	0	0	0	0	0	0	0	0
		W								

0x03C8–0x03CF Digital to Analog Converter (DAC1)

0x03CC	Reserved	R	0	0	0	0	0	0	0	0
		W								
0x03CD	Reserved	R	0	0	0	0	0	0	0	0
		W								
0x03CE	Reserved	R	0	0	0	0	0	0	0	0
		W								
0x03CF	Reserved	R	0	0	0	0	0	0	0	0
		W								

0x03D0–0x03FF Reserved

Address	Name		Bit 7	Bit 6	Bit 5	Bit 4	Bit 3	Bit 2	Bit 1	Bit 0
0x03D0-0x03FF	Reserved	R	0	0	0	0	0	0	0	0
		W								

Appendix C
Ordering and Shipping Information

Revision History

Version Number	Revision Date	Description of Changes
Rev 0.01	2-Jan-2009	Initial release
Rev 0.02	22-Nov-2012	Added temperature option W
Rev 0.03	25-Jan-2013	• Updated C.1, “Ordering Information” (added KGD option) • Added C.2, “KGD Shipping Information”
Rev 0.04	1-Feb-2013	• Removed C.2, “KGD Shipping Information”

C.1 Ordering Information

The following figure provides an ordering part number example for the devices covered by this data book. There are two options when ordering a device. Customers must choose between ordering either the mask-specific part number or the generic / mask-independent part number. Ordering the mask-specific part number enables the customer to specify which particular mask set they will receive whereas ordering the generic mask set means that FSL will ship the currently preferred mask set (which may change over time).

In either case, the marking on the device will always show the generic / mask-independent part number and the mask set number.

NOTE

The mask identifier suffix and the Tape & Reel suffix are always both omitted from the part number which is actually marked on the device.

For specific part numbers to order, please contact your local sales office. The below figure illustrates the structure of a typical mask-specific ordering number for the MC9S12G devices

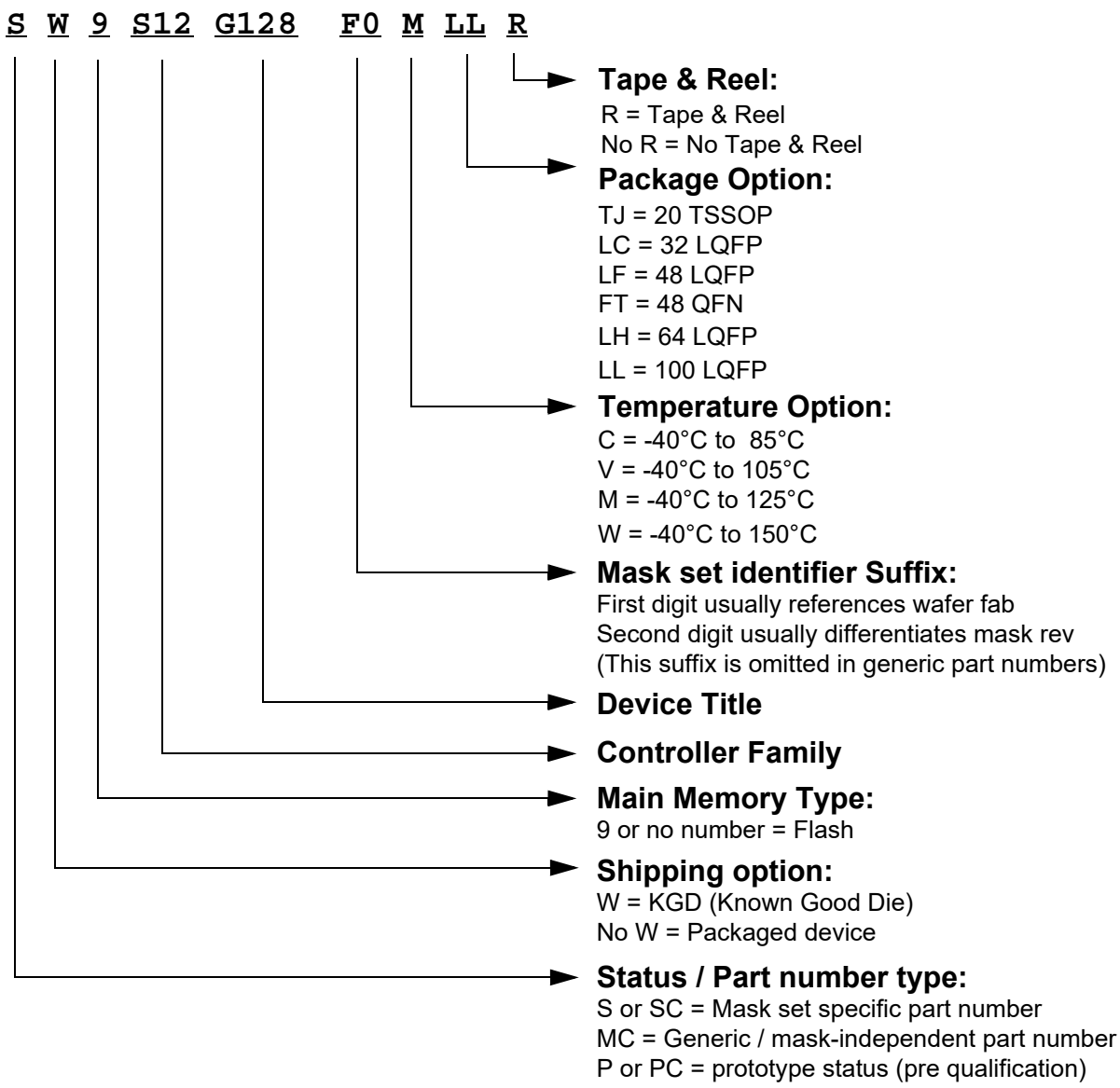

Figure C-1. Order Part Number Example

Appendix D
Package and Die Information

Revision History

Version Number	Revision Date	Description of Changes
Rev 0.01	2-Jan-2009	Initial release
Rev 0.02	25-Jan-2013	• Added D.7, “KGD Information”
Rev 0.03	31-Jan-2013	• Updated , “Bondpad Coordinates”

D.1 100 LQFP Mechanical Dimensions

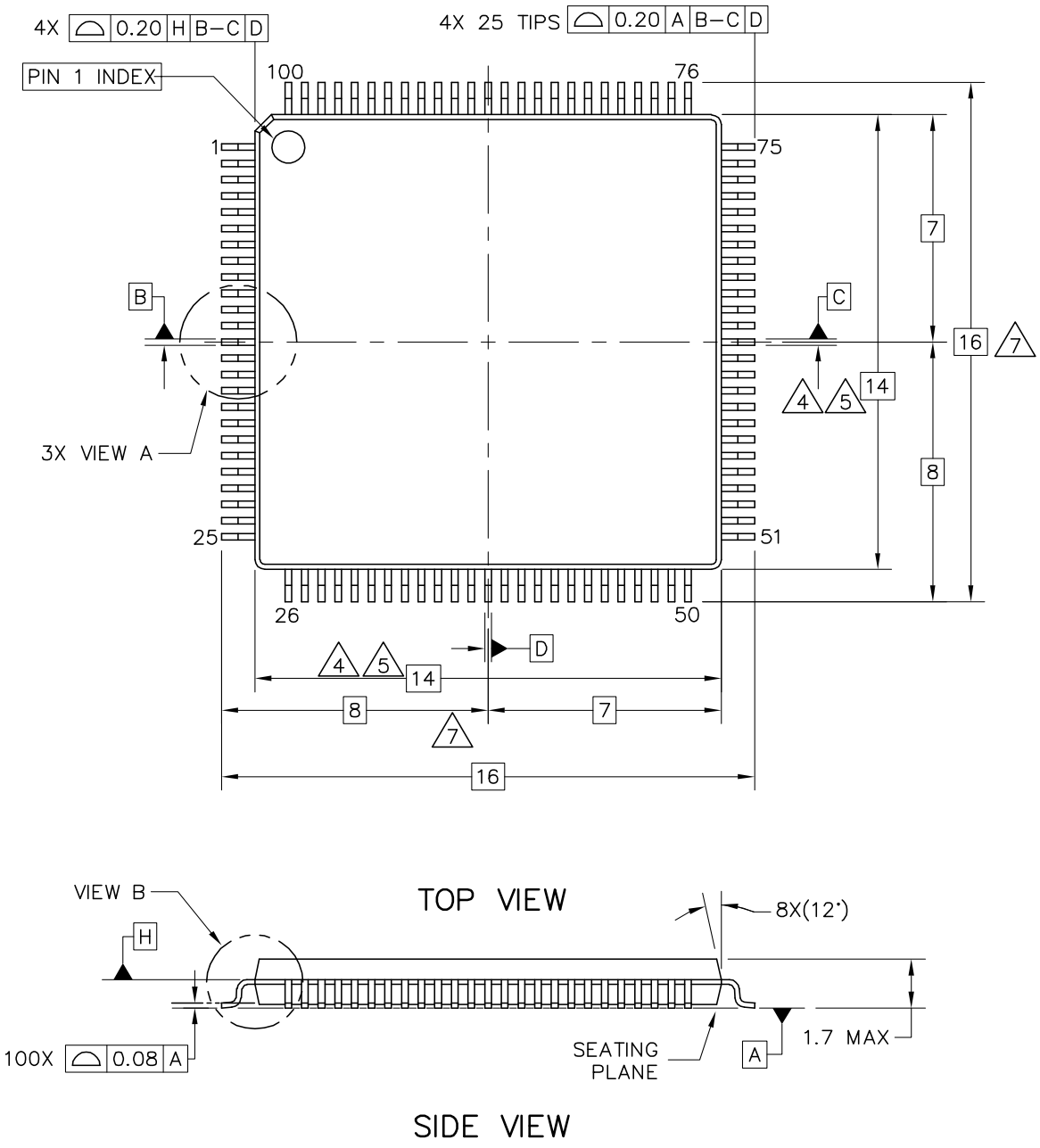

© FREESCALE SEMICONDUCTOR, INC. ALL RIGHTS RESERVED.	MECHANICAL OUTLINE	PRINT VERSION NOT TO SCALE
TITLE: 100 LEAD LQFP 14 X 14, 0.5 PITCH, 1.4 THICK	DOCUMENT NO: 98ASS23308W	REV: H
	CASE NUMBER: 983–02	25 MAY 2005
	STANDARD: NON–JEDEC	

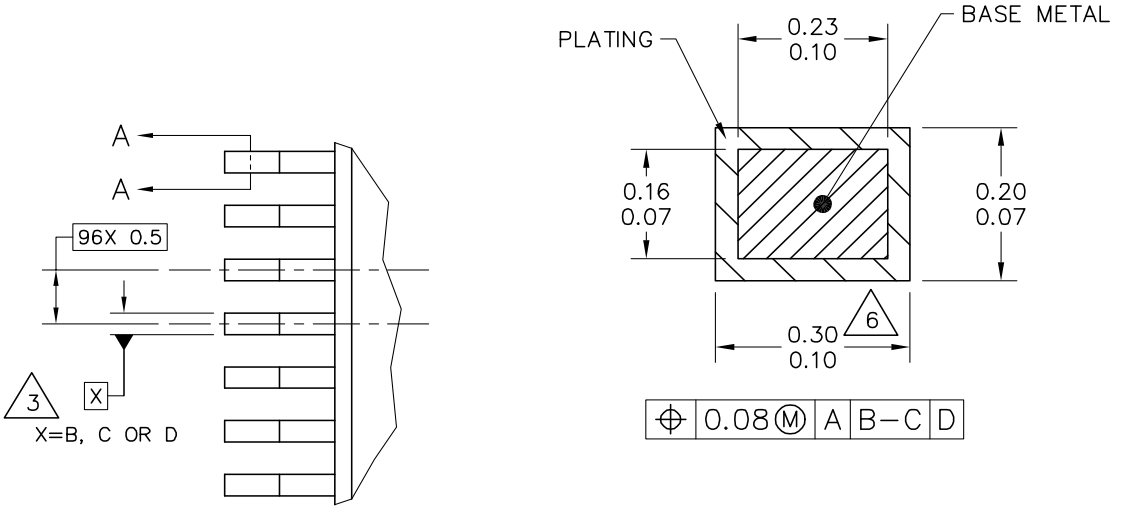

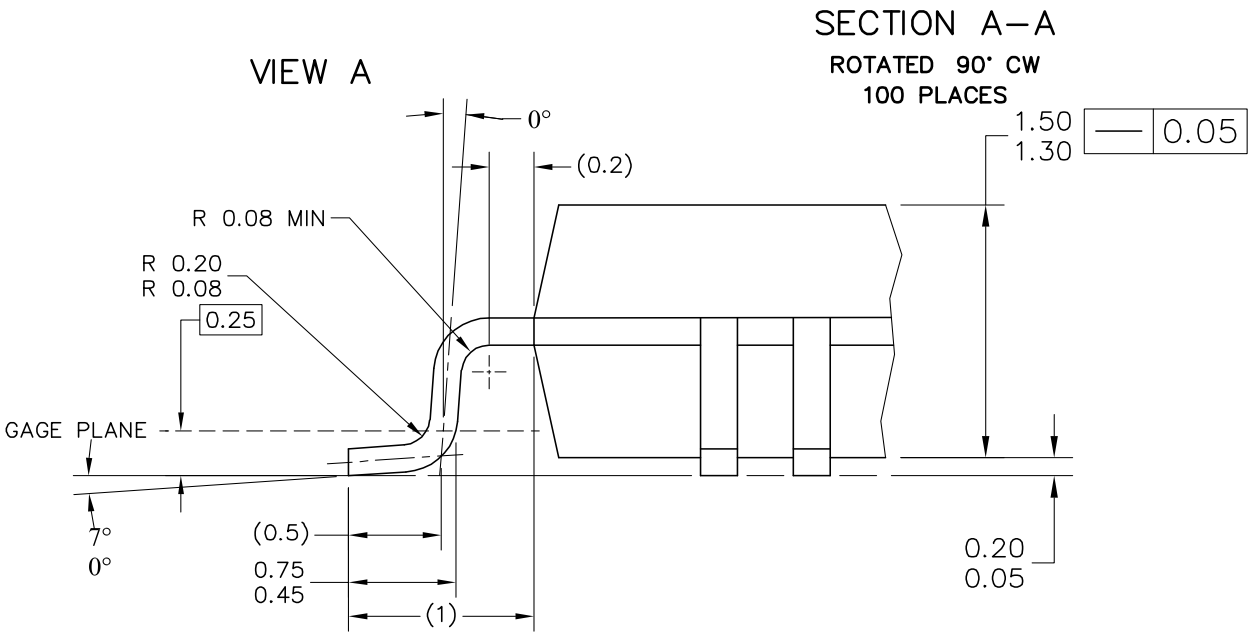

VIEW B

© FREESCALE SEMICONDUCTOR, INC. ALL RIGHTS RESERVED.	MECHANICAL OUTLINE	PRINT VERSION NOT TO SCALE
TITLE: 100 LEAD LQFP 14 X 14, 0.5 PITCH, 1.4 THICK	DOCUMENT NO: 98ASS23308W	REV: H
	CASE NUMBER: 983–02	25 MAY 2005
	STANDARD: NON–JEDEC	

NOTES:

1. ALL DIMENSIONS ARE IN MILLIMETERS.

2. INTERPRET DIMENSIONS AND TOLERANCES PER ASME Y14.5M–1994.

3. DATUMS B, C AND D TO BE DETERMINED AT DATUM PLANE H.

4. THE TOP PACKAGE BODY SIZE MAY BE SMALLER THAN THE BOTTOM PACKAGE SIZE BY A MAXIMUM OF 0.1 mm.

5. DIMENSIONS D1 AND E1 DO NOT INCLUDE MOLD PROTRUSIONS. THE MAXIMUM ALLOWABLE PROTRUSION IS 0.25 mm PER SIDE. D1 AND E1 ARE MAXIMUM BODY SIZE DIMENSIONS INCLUDING MOLD MISMATCH.

6. DIMENSION b DOES NOT INCLUDE DAM BAR PROTRUSION. PROTRUSIONS SHALL NOT CAUSE THE LEAD WIDTH TO EXCEED 0.35. MINIMUM SPACE BETWEEN PROTRUSION AND AN ADJACENT LEAD SHALL BE 0.07 MM.

7. DIMENSIONS D AND E ARE DETERMINED AT THE SEATING PLANE, DATUM A.

© FREESCALE SEMICONDUCTOR, INC.
ALL RIGHTS RESERVED.

MECHANICAL OUTLINE	PRINT VERSION NOT TO SCALE

TITLE:	DOCUMENT NO: 98ASS23308W	REV: H
100 LEAD LQFP 14 X 14, 0.5 PITCH, 1.4 THICK	CASE NUMBER: 983–02	25 MAY 2005
	STANDARD: NON–JEDEC	

D.2 64 LQFP Mechanical Dimensions

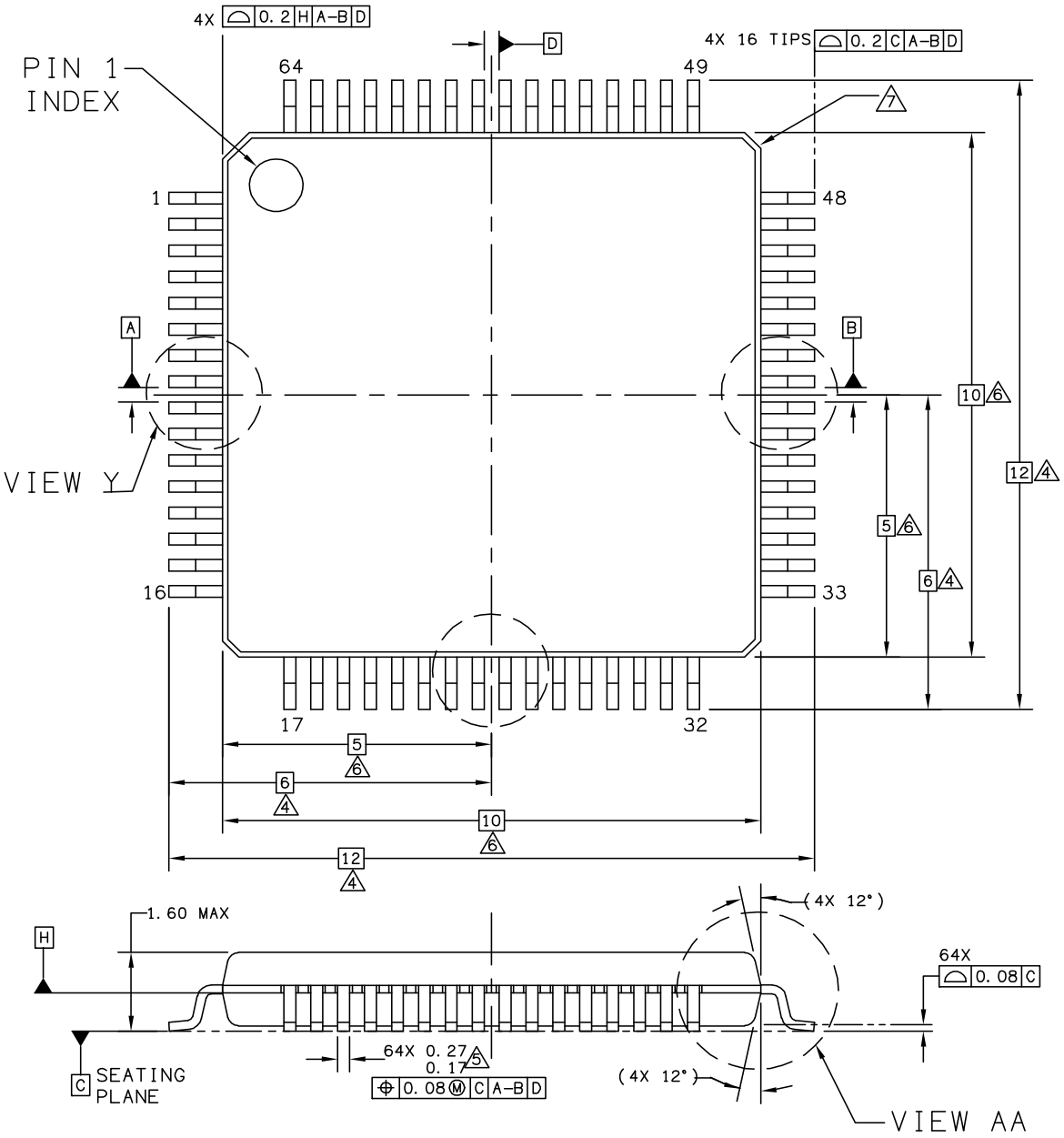

© FREESCALE SEMICONDUCTOR, INC. ALL RIGHTS RESERVED.	MECHANICAL OUTLINE	PRINT VERSION NOT TO SCALE
TITLE: 64LD LQFP, 10 X 10 X 1.4 PKG, 0.5 PITCH, CASE OUTLINE	DOCUMENT NO: 98ASS23234W	REV: E
	CASE NUMBER: 840F-02	11 AUG 2006
	STANDARD: JEDEC MS-026 BCD	

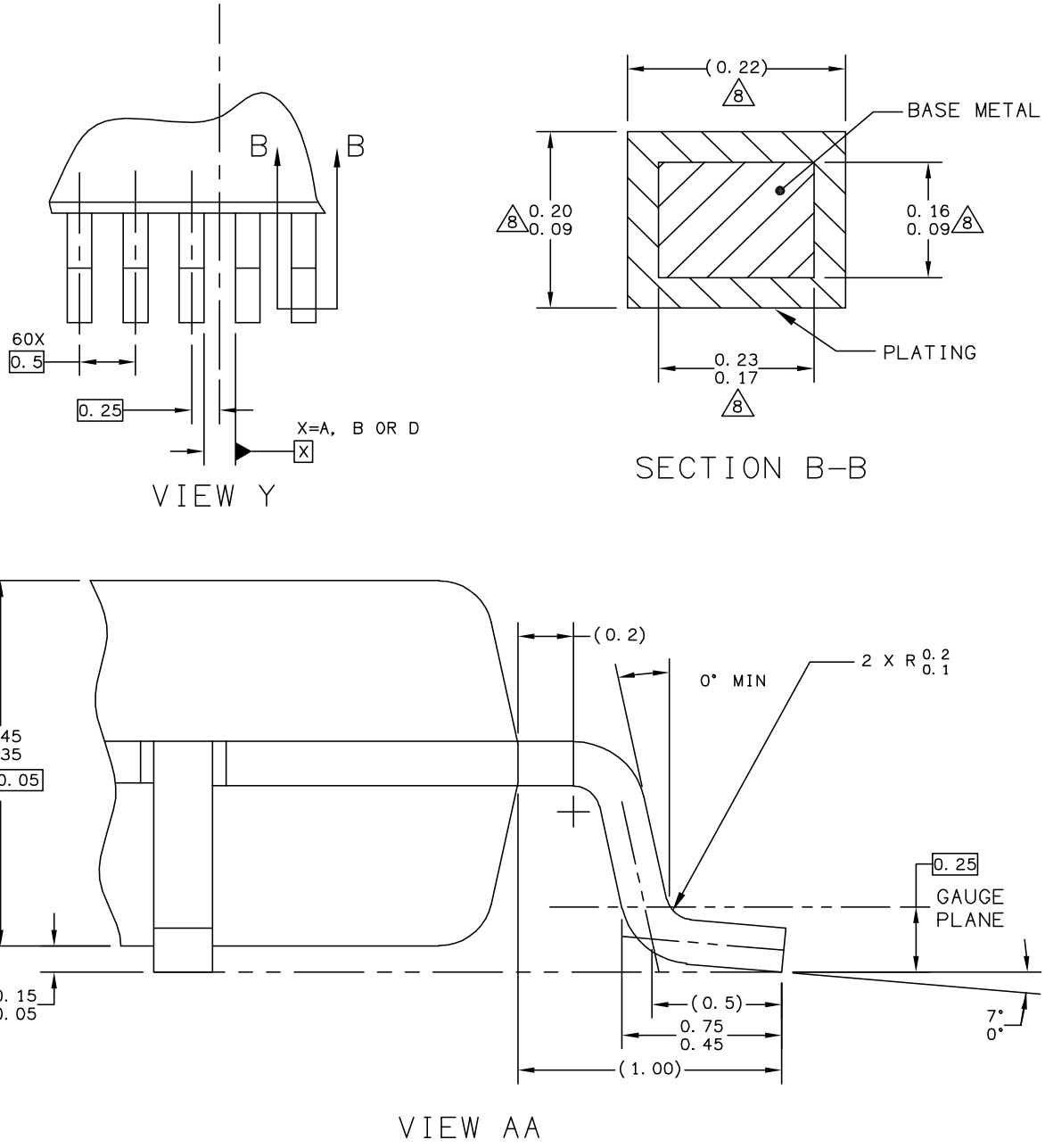

© FREESCALE SEMICONDUCTOR, INC. ALL RIGHTS RESERVED.	**MECHANICAL OUTLINE**	PRINT VERSION NOT TO SCALE
TITLE: 64LD LQFP, 10 X 10 X 1.4 PKG, 0.5 PITCH, CASE OUTLINE	DOCUMENT NO: 98ASS23234W	REV: E
	CASE NUMBER: 840F-02	11 AUG 2006
	STANDARD: JEDEC MS-026 BCD	

NOTES:

1. DIMENSIONS ARE IN MILLIMETERS.
2. DIMENSIONING AND TOLERANCING PER ASME Y14.5M–1994.
3. DATUMS A, B AND D TO BE DETERMINED AT DATUM PLANE H.
4. DIMENSIONS TO BE DETERMINED AT SEATING PLANE C.
5. THIS DIMENSION DOES NOT INCLUDE DAMBAR PROTRUSION. ALLOWABLE DAMBAR PROTRUSION SHALL NOT CAUSE THE LEAD WIDTH TO EXCEED THE UPPER LIMIT BY MORE THAN 0.08 mm AT MAXIMUM MATERIAL CONDITION. DAMBAR CANNOT BE LOCATED ON THE LOWER RADIUS OR THE FOOT. MINIMUM SPACE BETWEEN PROTRUSION AND ADJACENT LEAD SHALL NOT BE LESS THAN 0.07 mm.
6. THIS DIMENSION DOES NOT INCLUDE MOLD PROTRUSION. ALLOWABLE PROTRUSION IS 0.25 mm PER SIDE. THIS DIMENSION IS MAXIMUM PLASTIC BODY SIZE DIMENSION INCLUDING MOLD MISMATCH.
7. EXACT SHAPE OF EACH CORNER IS OPTIONAL.
8. THESE DIMENSIONS APPLY TO THE FLAT SECTION OF THE LEAD BETWEEN 0.1 mm AND 0.25 mm FROM THE LEAD TIP.

© FREESCALE SEMICONDUCTOR, INC.
ALL RIGHTS RESERVED.

MECHANICAL OUTLINE	PRINT VERSION NOT TO SCALE

TITLE: 64LD LQFP, 10 X 10 X 1.4 PKG, 0.5 PITCH, CASE OUTLINE	DOCUMENT NO: 98ASS23234W	REV: E
	CASE NUMBER: 840F–02	11 AUG 2006
	STANDARD: JEDEC MS–026 BCD	

D.3 48 LQFP Mechanical Dimensions

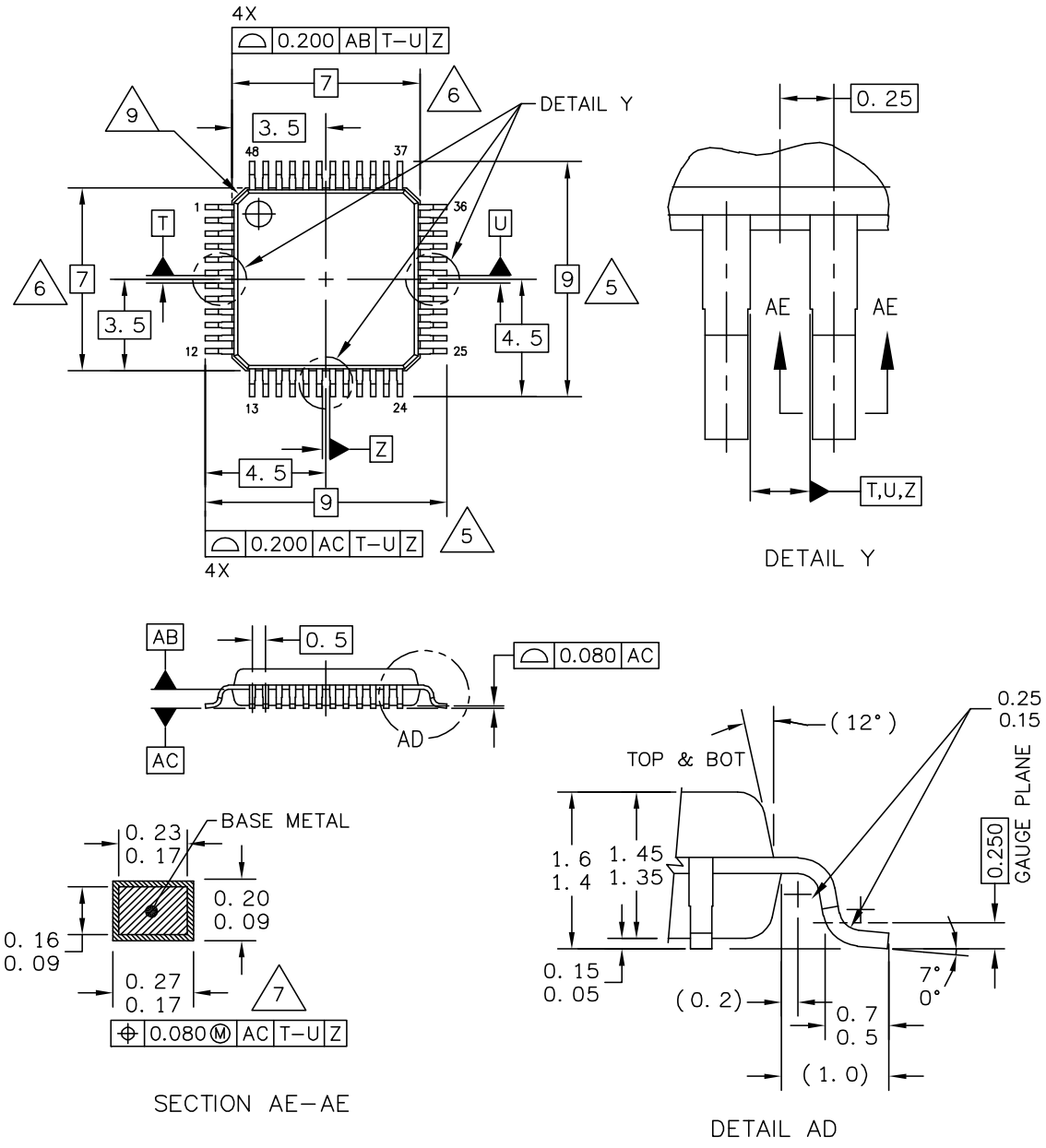

© FREESCALE SEMICONDUCTOR, INC. ALL RIGHTS RESERVED.	MECHANICAL OUTLINE	PRINT VERSION NOT TO SCALE
TITLE: LQFP, 48 LEAD, 0.50 PITCH (7.0 X 7.0 X 1.4)	DOCUMENT NO: 98ASH00962A	REV: G
	CASE NUMBER: 932-03	14 APR 2005
	STANDARD: JEDEC MS-026-BBC	

NOTES:

1. DIMENSIONS AND TOLERANCING PER ASME Y14.5M–1994.
2. CONTROLLING DIMENSION: MILLIMETER.
3. DATUM PLANE AB IS LOCATED AT BOTTOM OF LEAD AND IS COINCIDENT WITH THE LEAD WHERE THE LEAD EXITS THE PLASTIC BODY AT THE BOTTOM OF THE PARTING LINE.
4. DATUMS T, U, AND Z TO BE DETERMINED AT DATUM PLANE AB.
5. DIMENSIONS TO BE DETERMINED AT SEATING PLANE AC.
6. DIMENSIONS DO NOT INCLUDE MOLD PROTRUSION. ALLOWABLE PROTRUSION IS 0.250 PER SIDE. DIMENSIONS DO INCLUDE MOLD MISMATCH AND ARE DETERMINED AT DATUM PLANE AB.
7. THIS DIMENSION DOES NOT INCLUDE DAMBAR PROTRUSION. DAMBAR PROTRUSION SHALL NOT CAUSE THE LEAD WIDTH TO EXCEED 0.350.
8. MINIMUM SOLDER PLATE THICKNESS SHALL BE 0.0076.
9. EXACT SHAPE OF EACH CORNER IS OPTIONAL.

© FREESCALE SEMICONDUCTOR, INC. ALL RIGHTS RESERVED.	**MECHANICAL OUTLINE**	PRINT VERSION NOT TO SCALE	
TITLE: LQFP, 48 LEAD, 0.50 PITCH (7.0 X 7.0 X 1.4)	DOCUMENT NO: 98ASH00962A	REV: G	
	CASE NUMBER: 932-03	14 APR 2005	
	STANDARD: JEDEC MS-026-BBC		

D.4 48 QFN Mechanical Dimensions

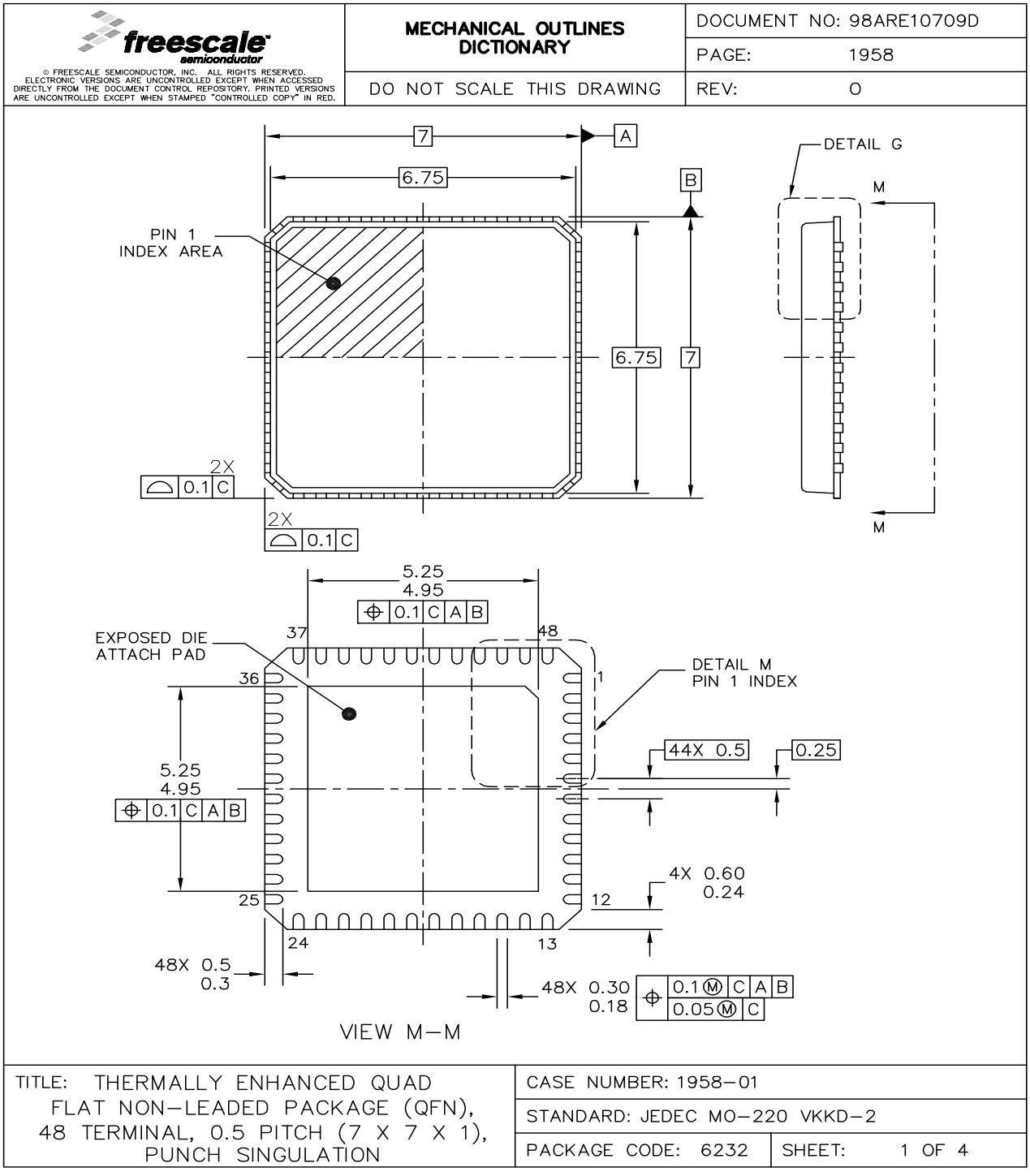

freescale semiconductor	MECHANICAL OUTLINES DICTIONARY	DOCUMENT NO: 98ARE10709D
		PAGE: 1958
	DO NOT SCALE THIS DRAWING	REV: O

© FREESCALE SEMICONDUCTOR, INC. ALL RIGHTS RESERVED.
ELECTRONIC VERSIONS ARE UNCONTROLLED EXCEPT WHEN ACCESSED DIRECTLY FROM THE DOCUMENT CONTROL REPOSITORY. PRINTED VERSIONS ARE UNCONTROLLED EXCEPT WHEN STAMPED "CONTROLLED COPY" IN RED.

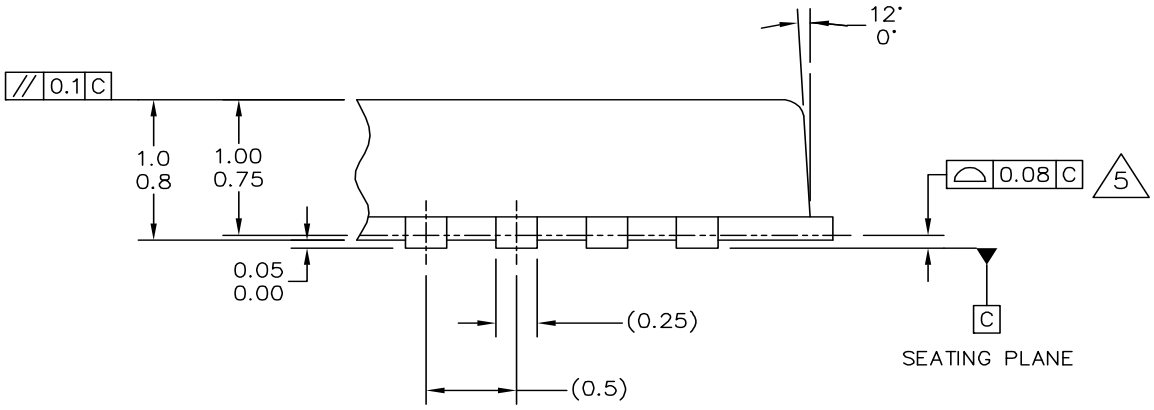

DETAIL G
VIEW ROTATED 90° CW

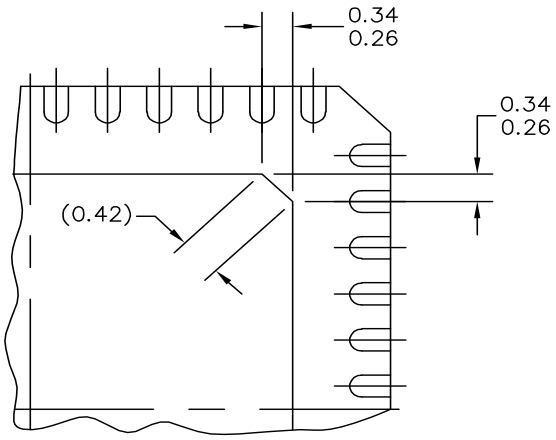

DETAIL M
BACKSIDE PIN 1 INDEX

TITLE: THERMALLY ENHANCED QUAD FLAT NON–LEADED PACKAGE (QFN), 48 TERMINAL, 0.5 PITCH (7 X 7 X 1), PUNCH SINGULATION	CASE NUMBER: 1958–01	
	STANDARD: JEDEC MO–220 VKKD–2	
	PACKAGE CODE: 6232	SHEET: 2 OF 4

freescale semiconductor	MECHANICAL OUTLINES DICTIONARY	DOCUMENT NO: 98ARE10709D
		PAGE: 1958
	DO NOT SCALE THIS DRAWING	REV: O

© FREESCALE SEMICONDUCTOR, INC. ALL RIGHTS RESERVED.
ELECTRONIC VERSIONS ARE UNCONTROLLED EXCEPT WHEN ACCESSED DIRECTLY FROM THE DOCUMENT CONTROL REPOSITORY. PRINTED VERSIONS ARE UNCONTROLLED EXCEPT WHEN STAMPED "CONTROLLED COPY" IN RED.

NOTES:

1. ALL DIMENSIONS ARE IN MILLIMETERS.
2. DIMENSIONING AND TOLERANCING PER ASME Y14.5M–1994.
3. THE COMPLETE JEDEC DESIGNATOR FOR THIS PACKAGE IS: HF–PQFN.
4. MOLD SURFACE ROUGHNESS IS 0.8~1.0m(Ra).
5. COPLANARITY APPLIES TO LEADS AND DIE ATTACH PAD.
6. FOR ANVIL SINGULATED QFN PACKAGES, MAXIMUM DRAFT ANGLE IS 12°.
7. MIN METAL GAP SHOULD BE 0.25MM.

TITLE: THERMALLY ENHANCED QUAD FLAT NON–LEADED PACKAGE (QFN), 48 TERMINAL, 0.5 PITCH (7 X 7 X 1), PUNCH SINGULATION	CASE NUMBER: 1958–01	
	STANDARD: JEDEC MO–220 VKKD–2	
	PACKAGE CODE: 6232	SHEET: 3 OF 4

D.5 32 LQFP Mechanical Dimensions

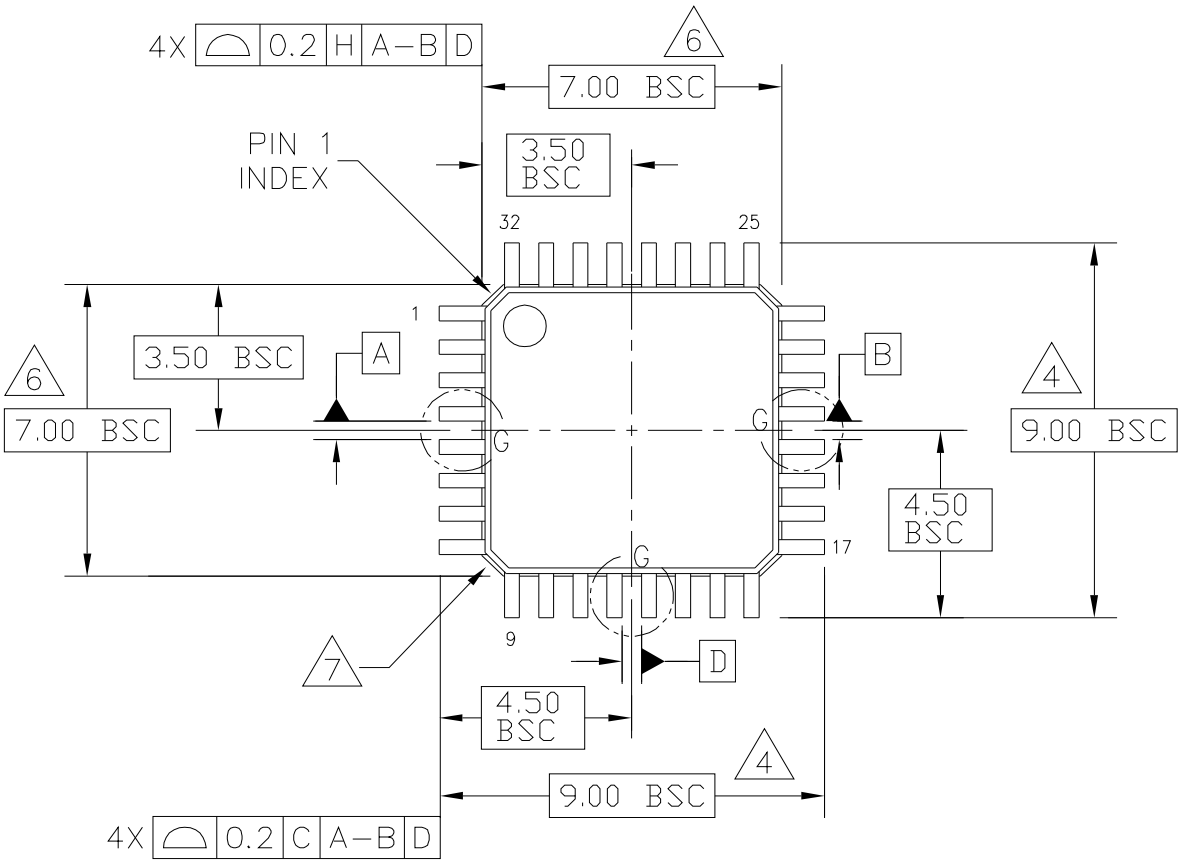

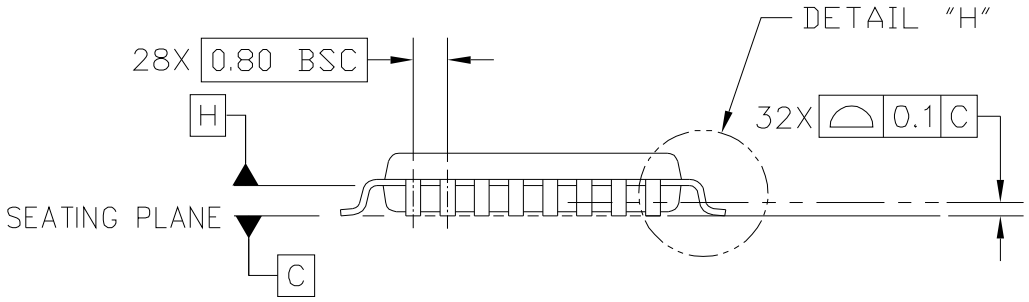

© FREESCALE SEMICONDUCTOR, INC. ALL RIGHTS RESERVED.	MECHANICAL OUTLINE	PRINT VERSION NOT TO SCALE
TITLE: LOW PROFILE QUAD FLAT PACK (LQFP) 32 LEAD, 0.8 PITCH (7 X 7 X 1.4)	DOCUMENT NO: 98ASH70029A	REV: D
	CASE NUMBER: 873A-03	19 MAY 2005
	STANDARD: JEDEC MS-026 BBA	

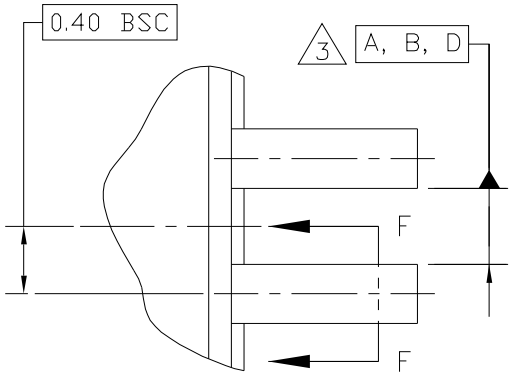

DETAIL G

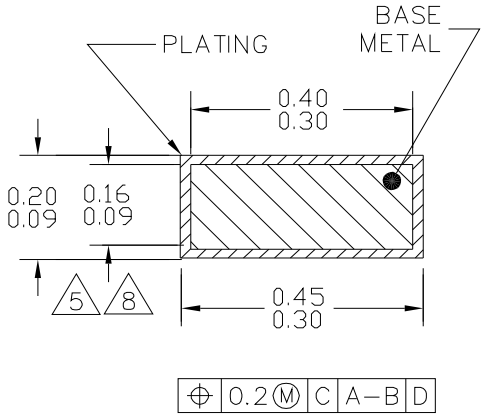

SECTION F–F
ROTATED 90°CW
32 PLACES

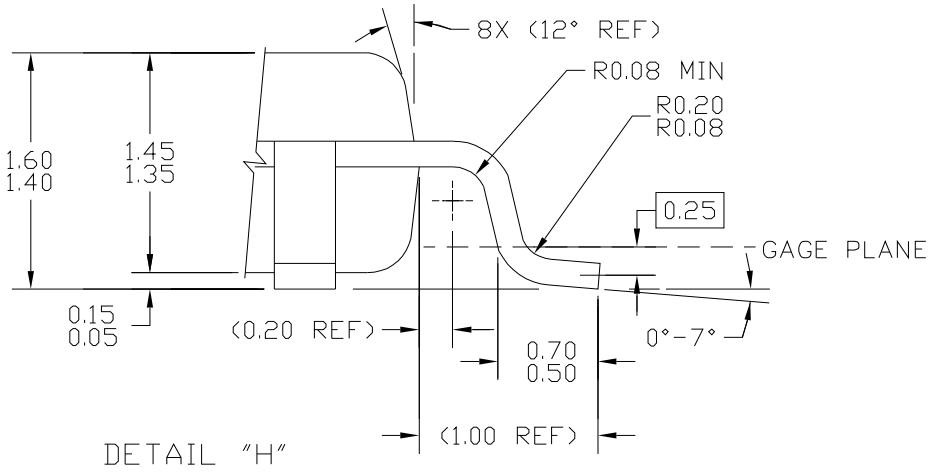

DETAIL "H"

© FREESCALE SEMICONDUCTOR, INC. ALL RIGHTS RESERVED.	MECHANICAL OUTLINE	PRINT VERSION NOT TO SCALE
TITLE: LOW PROFILE QUAD FLAT PACK (LQFP) 32 LEAD, 0.8 PITCH (7 X 7 X 1.4)	DOCUMENT NO: 98ASH70029A	REV: D
	CASE NUMBER: 873A-03	19 MAY 2005
	STANDARD: JEDEC MS-026 BBA	

NOTES:

1. DIMENSIONS ARE IN MILLIMETERS.

2. INTERPRET DIMENSIONS AND TOLERANCES PER ASME Y14.5–1994.

3. DATUMS A, B, AND D TO BE DETERMINED AT DATUM PLANE H.

4. DIMENSIONS TO BE DETERMINED AT SEATING PLANE DATUM C.

5. DIMENSION DOES NOT INCLUDE DAMBAR PROTRUSION. ALLOWABLE DAMBAR PROTRUSION SHALL NOT CAUSE THE LEAD WIDTH TO EXCEED THE MAXIMUM DIMENSION BY MORE THAN 0.08 MM. DAMBAR CANNOT BE LOCATED ON THE LOWER RADIUS OR THE FOOT. MINIMUM SPACE BETWEEN PROTRUSION AND ADJACENT LEAD OR PROTRUSION: 0.07 MM.

6. DIMENSIONS DO NOT INCLUDE MOLD PROTRUSION. ALLOWABLE PROTRUSION IS 0.25 MM PER SIDE. DIMENSIONS ARE MAXIMUM PLASTIC BODY SIZE DIMENSIONS INCLUDING MOLD MISMATCH.

7. EXACT SHAPE OF EACH CORNER IS OPTIONAL.

8. THESE DIMENSIONS APPLY TO THE FLAT SECTION OF THE LEAD BETWEEN 0.1 MM AND 0.25 MM FROM THE LEAD TIP.

© FREESCALE SEMICONDUCTOR, INC.
ALL RIGHTS RESERVED.

MECHANICAL OUTLINE	PRINT VERSION NOT TO SCALE

TITLE:	DOCUMENT NO: 98ASH70029A	REV: D
LOW PROFILE QUAD FLAT PACK (LQFP) 32 LEAD, 0.8 PITCH (7 X 7 X 1.4)	CASE NUMBER: 873A-03	19 MAY 2005
	STANDARD: JEDEC MS-026 BBA	

D.6 20 TSSOP Mechanical Dimensions

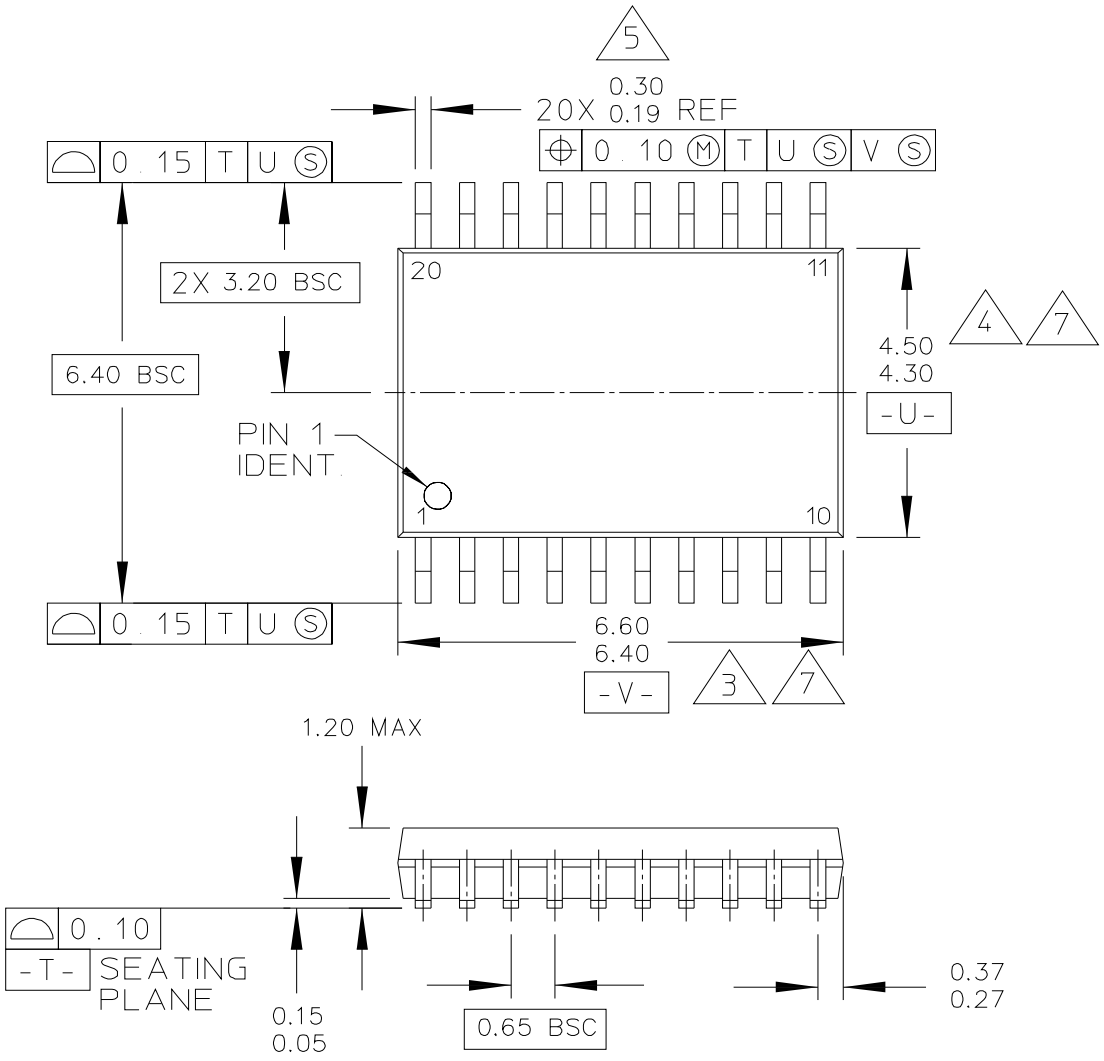

© FREESCALE SEMICONDUCTOR, INC. ALL RIGHTS RESERVED.	MECHANICAL OUTLINE	PRINT VERSION NOT TO SCALE
TITLE: 20 LD TSSOP, PITCH 0.65MM	DOCUMENT NO: 98ASH70169A	REV: C
	CASE NUMBER: 948E-02	25 MAY 2005
	STANDARD: JEDEC	

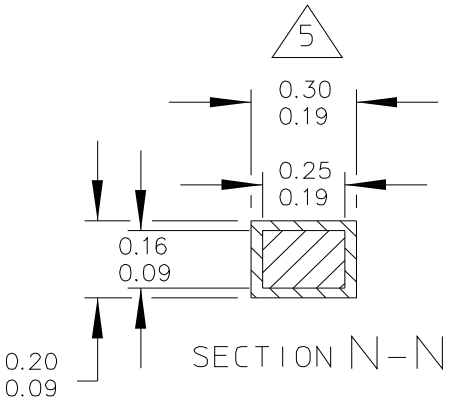

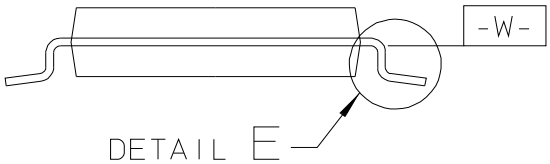

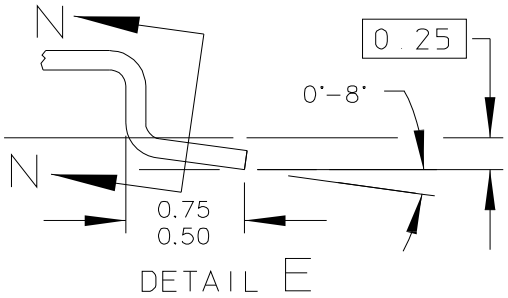

© FREESCALE SEMICONDUCTOR, INC. ALL RIGHTS RESERVED.	MECHANICAL OUTLINE	PRINT VERSION NOT TO SCALE
TITLE: 20 LD TSSOP, PITCH 0.65MM	DOCUMENT NO: 98ASH70169A	REV: C
	CASE NUMBER: 948E-02	25 MAY 2005
	STANDARD: JEDEC	

NOTES:

1. CONTROLLING DIMENSION: MILLIMETER
2. DIMENSIONS AND TOLERANCES PER ANSI Y14.5M-1982.
3. DIMENSION DOES NOT INCLUDE MOLD FLASH, PROTRUSIONS OR GATE BURRS. MOLD FLASH OR GATE BURRS SHALL NOT EXCEED 0.15 PER SIDE.
4. DIMENSION DOES NOT INCLUDE INTERLEAD FLASH OR PROTRUSION. INTERLEAD FLASH OR PROTRUSION SHALL NOT EXCEED 0.25 PER SIDE.
5. DIMENSION DOES NOT INCLUDE DAMBAR PROTRUSION. ALLOWABLE DAMBAR PROTRUSION SHALL BE 0.08 TOTAL IN EXCESS OF THE DIMENSION AT MAXIMUM MATERIAL CONDITION.
6. TERMINAL NUMBERS ARE SHOWN FOR REFERENCE ONLY.
7. DIMENSIONS ARE TO BE DETERMINED AT DATUM PLANE -W-.

© FREESCALE SEMICONDUCTOR, INC.
ALL RIGHTS RESERVED.

MECHANICAL OUTLINE	PRINT VERSION NOT TO SCALE

TITLE:	DOCUMENT NO: 98ASH70169A	REV: C
20 LD TSSOP, PITCH 0.65MM	CASE NUMBER: 948E-02	25 MAY 2005
	STANDARD: JEDEC	

D.7 KGD Information

Bondpad Coordinates

Table D-1. Bondpad Coordinates

Die Pad	Bond Post	Die Pad X Coordinate	Die Pad Y Coordinate	Function
1	1	-1832.06	1347.5	PJ[6]
2	2	-1832.06	1223.5	PJ[5]
3	3	-1832.06	1116.5	PJ[4]
4	4	-1832.06	1009.5	PA[0]
5	5	-1832.06	902.5	PA[1]
6	6	-1832.06	795.5	PA[2]
7	7	-1832.06	688.5	PA[3]
8	8	-1832.06	603.5	RESET
9	9	-1832.06	496.5	VDDX1
10	10	-1832.06	369	VDDR
11	11	-1832.06	241.5	VSSX1
12	12	-1832.06	136.5	PE[0]
13	13	-1832.06	22.5	VSS1
14	14	-1832.06	-91.5	PE[1]
15	15	-1832.06	-201.5	TEST
16	16	-1832.06	-311.5	PA[4]
17	17	-1832.06	-396.5	PA[5]
18	18	-1832.06	-483.5	PA[6]
19	19	-1832.06	-578.5	PA[7]
20	20	-1832.06	-683.5	PJ[0]
21	21	-1832.06	-797.5	PJ[1]
22	22	-1832.06	-921.5	PJ[2]
23	23	-1832.06	-1054.5	PJ[3]
24	24	-1832.06	-1196.5	BKGD
25	25	-1832.06	-1347.5	PB[0]
26	26	-1707.5	-1472.06	PB[1]
27	27	-1506.5	-1472.06	PB[2]

Table D-1. Bondpad Coordinates

Die Pad	Bond Post	Die Pad X Coordinate	Die Pad Y Coordinate	Function
28	28	-1315.5	-1472.06	PB[3]
29	29	-1134.5	-1472.06	PP[0]
30	30	-964.5	-1472.06	PP[1]
31	31	-794.5	-1472.06	PP[2]
32	32	-660.5	-1472.06	PP[3]
33	33	-526.5	-1472.06	PP[4]
34	34	-404.5	-1472.06	PP[5]
35	35	-292.5	-1472.06	PP[6]
36	36	-190.5	-1472.06	PP[7]
37	37	-105.5	-1472.06	VDDX3
38	38	-0.5	-1472.06	VSSX3
39	39	93.5	-1472.06	PT[7]
40	40	189.5	-1472.06	PT[6]
41	41	291.5	-1472.06	PT[5]
42	42	403.5	-1472.06	PT[4]
43	43	525.5	-1472.06	PT[3]
44	44	659.5	-1472.06	PT[2]
45	45	805.5	-1472.06	PT[1]
46	46	964.5	-1472.06	PT[0]
47	47	1120.5	-1472.06	PB[4]
48	48	1242.5	-1472.06	PB[5]
49	49	1412.5	-1472.06	PB[6]
50	50	1582.5	-1472.06	PB[7]
51	51	-1832.06	-1347.5	PC[0]
52	52	-1832.06	-1139.5	PC[1]
53	53	-1832.06	-1022.5	PC[2]
54	54	-1832.06	-905.5	PC[3]
55	55	-1832.06	-788.5	PAD[0]
56	56	-1832.06	-681.5	PAD[8]
57	57	-1832.06	-574.5	PAD[1]

Table D-1. Bondpad Coordinates

Die Pad	Bond Post	Die Pad X Coordinate	Die Pad Y Coordinate	Function
58	58	-1832.06	-467.5	PAD[9]
59	59	-1832.06	-360.5	PAD[2]
60	60	-1832.06	-253.5	PAD[10]
61	61	-1832.06	-148.5	PAD[3]
62	62	-1832.06	-41.5	PAD[11]
63	63	-1832.06	65.5	PAD[4]
64	64	-1832.06	172.5	PAD[12]
65	65	-1832.06	279.5	PAD[5]
66	66	-1832.06	386.5	PAD[13]
67	67	-1832.06	493.5	PAD[6]
68	68	-1832.06	598.5	PAD[14]
69	69	-1832.06	705.5	PAD[7]
70	70	-1832.06	812.5	PAD[15]
71	71	-1832.06	919.5	PC[4]
72	72	-1832.06	1026.5	PC[5]
73	73	-1832.06	1133.5	PC[6]
74	74	-1832.06	1240.5	PC[7]
75	75	-1832.06	1347.5	VRH
76	76	1707.5	-1472.06	VDDA
77	77	1598.5	-1472.06	VRL
78	77	1477.5	-1472.06	VSSA
79	78	1237.5	-1472.06	PD[0]
80	79	1117.5	-1472.06	PD[1]
81	80	947.5	-1472.06	PD[2]
82	81	777.5	-1472.06	PD[3]
83	82	652.5	-1472.06	PS[0]
84	83	527.5	-1472.06	PS[1]
85	84	422.5	-1472.06	PS[2]
86	85	327.5	-1472.06	PS[3]
87	86	242.5	-1472.06	PS[4]

Table D-1. Bondpad Coordinates

Die Pad	Bond Post	Die Pad X Coordinate	Die Pad Y Coordinate	Function
88	87	128.5	-1472.06	PS[5]
89	88	14.5	-1472.06	PS[6]
90	89	-99.5	-1472.06	PS[7]
91	90	-213.5	-1472.06	VSSX2
92	91	-318.5	-1472.06	VDDX2
93	92	-428.5	-1472.06	PM[0]
94	93	-548.5	-1472.06	PM[1]
95	94	-688.5	-1472.06	PD[4]
96	95	-828.5	-1472.06	PD[5]
97	96	-998.5	-1472.06	PD[6]
98	97	-1168.5	-1472.06	PD[7]
99	98	-1338.5	-1472.06	PM[2]
100	99	-1518.5	-1472.06	PM[3]
101	100	-1707.5	-1472.06	PJ[7]

How to Reach Us:

Home Page:

nxp.com

Web Support

nxp.com/support

Information in this document is provided solely to enable system and software implementers to use NXP products. There are no express or implied copyright licenses granted hereunder to design or fabricate any integrated circuits based on the information in this document. NXP reserves the right to make changes without further notice to any products herein.

NXP makes no warranty, representation, or guarantee regarding the suitability of its products for any particular purpose, nor does NXP assume any liability arising out of the application or use of any product or circuit, and specifically disclaims any and all liability, including without limitation consequential or incidental damages. “Typical” parameters that may be provided in NXP data sheets and/or specifications can and do vary in different applications, and actual performance may vary over time. All operating parameters, including “typicals,” must be validated for each customer application by customer's technical experts. NXP does not convey any license under its patent rights nor the rights of others. NXP sells products pursuant to standard terms and conditions of sale, which can be found at the following address: nxp.com/SalesTermsandConditions.

NXP, the NXP logo, NXP SECURE CONNECTIONS FOR A SMARTER WORLD, COOLFLUX, EMBRACE, GREENCHIP, HITAG, I2C BUS, ICODE, JCOP, LIFE VIBES, MIFARE, MIFARE CLASSIC, MIFARE DESFire, MIFARE PLUS, MIFARE FLEX, MANTIS, MIFARE ULTRALIGHT, MIFARE4MOBILE, MIGLO, NTAG, ROADLINK, SMARTLX, SMARTMX, STARPLUG, TOPFET, TRENCHMOS, UCODE, Freescale, the Freescale logo, AltiVec, C-5, CodeTEST, CodeWarrior, ColdFire, ColdFire+, C-Ware, the Energy Efficient Solutions logo, Kinetis, Layerscape, MagniV, mobileGT, PEG, PowerQUICC, Processor Expert, QorIQ, QorIQ Qonverge, Ready Play, SafeAssure, the SafeAssure logo, StarCore, Symphony, VortiQa, Vybrid, Airfast, BeeKit, BeeStack, CoreNet, Flexis, MXC, Platform in a Package, QUICC Engine, SMARTMOS, Tower, TurboLink, and UMEMS are trademarks of NXP B.V. All other product or service names are the property of their respective owners. ARM, AMBA, ARM Powered, Artisan, Cortex, Jazelle, Keil, SecurCore, Thumb, TrustZone, and μVision are registered trademarks of ARM Limited (or its subsidiaries) in the EU and/or elsewhere. ARM7, ARM9, ARM11, big.LITTLE, CoreLink, CoreSight, DesignStart, Mali, mbed, NEON, POP, Sensinode, Socrates, ULINK and Versatile are trademarks of ARM Limited (or its subsidiaries) in the EU and/or elsewhere. All rights reserved. Oracle and Java are registered trademarks of Oracle and/or its affiliates. The Power Architecture and Power.org word marks and the Power and Power.org logos and related marks are trademarks and service marks licensed by Power.org.
© 2016 NXP B.V.

Document Number: document number???
Rev.1.28
December 7, 2020