MC9S12P128
Reference Manual

Covers also MC9S12P-Family
MC9S12P96
MC9S12P64
MC9S12P32

S12
Microcontrollers

MC9S12P128RMV1

Rev. 1.14

24 June 2013

freescale.com

freescale™
semiconductor

To provide the most up-to-date information, the revision of our documents on the World Wide Web will be the most current. Your printed copy may be an earlier revision. To verify you have the latest information available, refer to:

http://freescale.com/

A full list of family members and options is included in the appendices.

The following revision history table summarizes changes contained in this document.

This document contains information for all constituent modules, with the exception of the CPU. For CPU information please refer to **CPU12-1** in the **CPU12 & CPU12X Reference Manual**.

Revision History

Date	Revision Level	Description
April 2008	1.07	PRELIMINARY
July 2008	1.08	Minor Corrections Added typ. I_{DD} values
December 2008	1.09	Completed Electricals Minor Corrections
March 2009	1.10	Final Electricals
June 2009	1.11	Corrected section 1.11.3.4 Memory Corrected 1.7.3.16 - 1.7.3.19 SPI pin description Removed reference to MMCCTL1 register from Table 13-5 Removed item 4b from Table A-6 and A-7 Changed Version ID in Table 1-5 from $FF to $00
October 2009	1.12	Added Register Summary Appendix D Updated FTMRC Blockguide . See Revision History Chapter 13 Updated CPMU Blockguide . See Revision History Chapter 7
April 2010	1.13	Updated S12PMMCV1 Blockguide. See Revision History Chapter 3 Updated S12CPMU Blockguide. See Revision History Chapter 7
June 2013	1.14	Added ETRIG0 & ETRIG1 to pinouts Added VDDX LVR Assert Level to Table A-24 Added Bandgap Reference Voltage to Table A-24

Chapter 1 Device Overview MC9S12P-Family 17
Chapter 2 Port Integration Module (S12PPIMV1) 49
Chapter 3 Memory Map Control (S12PMMCV1). 107
Chapter 4 Interrupt Module (S12SINTV1). 123
Chapter 5 Background Debug Module (S12SBDMV1) 131
Chapter 6 S12S Debug Module (S12SDBGV2) 155
Chapter 7 S12 Clock, Reset and Power Management Unit (S12CPMU) 197
Chapter 8 Freescale’s Scalable Controller Area Network (S12MSCANV3). 251
Chapter 9 Analog-to-Digital Converter (ADC12B10C) 305
Chapter 10 Pulse-Width Modulator (PWM8B6CV1) Block Description . .329
Chapter 11 Serial Communication Interface (S12SCIV5) 363
Chapter 12 Serial Peripheral Interface (S12SPIV5) 399
Chapter 13 128 KByte Flash Module (S12FTMRC128K1V1). 425
Chapter 14 Timer Module (TIM16B8CV2) Block Description 473
Appendix A Electrical Characteristics. 501
Appendix B Ordering Information 533
Appendix C Package Information 535
Appendix D Detailed Register Address Map. 545

Chapter 1Device Overview MC9S12P-Family

1.1 Introduction . . . 17
1.2 Features . . . 17
1.2.1 MC9S12P Family Comparison . . . 18
1.2.2 Chip-Level Features . . . 18
1.3 Module Features . . . 19
1.3.1 S12 16-Bit Central Processor Unit (CPU) . . . 19
1.3.2 On-Chip Flash with ECC . . . 19
1.3.3 On-Chip SRAM . . . 20
1.3.4 Main External Oscillator (XOSC) . . . 20
1.3.5 Internal RC Oscillator (IRC) . . . 20
1.3.6 Internal Phase-Locked Loop (IPLL) . . . 20
1.3.7 System Integrity Support . . . 20
1.3.8 Timer (TIM) . . . 21
1.3.9 Pulse Width Modulation Module (PWM) . . . 21
1.3.10 Controller Area Network Module (MSCAN) . . . 21
1.3.11 Serial Communication Interface Module (SCI) . . . 21
1.3.12 Serial Peripheral Interface Module (SPI) . . . 22
1.3.13 Analog-to-Digital Converter Module (ATD) . . . 22
1.3.14 On-Chip Voltage Regulator (VREG) . . . 22
1.3.15 Background Debug (BDM) . . . 22
1.3.16 Debugger (DBG) . . . 23
1.4 Block Diagram . . . 24
1.5 Device Memory Map . . . 25
1.6 Part ID Assignments . . . 28
1.7 Signal Description . . . 28
1.7.1 Device Pinout . . . 29
1.7.2 Pin Assignment Overview . . . 31
1.7.3 Detailed Signal Descriptions . . . 38
1.7.4 Power Supply Pins . . . 41
1.8 System Clock Description . . . 42
1.9 Modes of Operation . . . 42
1.9.1 Chip Configuration Summary . . . 43
1.9.2 Low Power Operation . . . 44
1.10 Security . . . 44
1.11 Resets and Interrupts . . . 44
1.11.1 Resets . . . 44
1.11.2 Interrupt Vectors . . . 44
1.11.3 Effects of Reset . . . 46
1.12 COP Configuration . . . 47
1.13 ATD External Trigger Input Connection . . . 47

1.14 S12CPMU Configuration 48

Chapter 2
Port Integration Module (S12PPIMV1)

2.1 Introduction 49
2.1.1 Overview 49
2.1.2 Features 50
2.2 External Signal Description 50
2.3 Memory Map and Register Definition 52
2.3.1 Memory Map 52
2.3.2 Register Descriptions 61
2.3.3 Port A Data Register (PORTA) 63
2.3.4 Port B Data Register (PORTB) 63
2.3.5 Port A Data Direction Register (DDRA) 64
2.3.6 Port B Data Direction Register (DDRB) 64
2.3.7 PIM Reserved Register 65
2.3.8 Port E Data Register (PORTE) 65
2.3.9 Port E Data Direction Register (DDRE) 66
2.3.10 Ports A, B, E, BKGD pin Pull-up Control Register (PUCR) 67
2.3.11 Ports A, B, E Reduced Drive Register (RDRIV) 68
2.3.12 ECLK Control Register (ECLKCTL) 69
2.3.13 PIM Reserved Register 69
2.3.14 IRQ Control Register (IRQCR) 70
2.3.15 PIM Reserved Register 70
2.3.16 Port T Data Register (PTT) 71
2.3.17 Port T Input Register (PTIT) 72
2.3.18 Port T Data Direction Register (DDRT) 73
2.3.19 Port T Reduced Drive Register (RDRT) 74
2.3.20 Port T Pull Device Enable Register (PERT) 74
2.3.21 Port T Polarity Select Register (PPST) 75
2.3.22 PIM Reserved Register 75
2.3.23 Port T Routing Register (PTTRR) 76
2.3.24 Port S Data Register (PTS) 77
2.3.25 Port S Input Register (PTIS) 77
2.3.26 Port S Data Direction Register (DDRS) 78
2.3.27 Port S Reduced Drive Register (RDRS) 79
2.3.28 Port S Pull Device Enable Register (PERS) 79
2.3.29 Port S Polarity Select Register (PPSS) 80
2.3.30 Port S Wired-Or Mode Register (WOMS) 80
2.3.31 PIM Reserved Register 81
2.3.32 Port M Data Register (PTM) 81
2.3.33 Port M Input Register (PTIM) 82
2.3.34 Port M Data Direction Register (DDRM) 83
2.3.35 Port M Reduced Drive Register (RDRM) 84
2.3.36 Port M Pull Device Enable Register (PERM) 85

2.3.37 Port M Polarity Select Register (PPSM) . . . 85
2.3.38 Port M Wired-Or Mode Register (WOMM) . . . 86
2.3.39 PIM Reserved Register . . . 86
2.3.40 Port P Data Register (PTP) . . . 87
2.3.41 Port P Input Register (PTIP) . . . 88
2.3.42 Port P Data Direction Register (DDRP) . . . 88
2.3.43 Port P Reduced Drive Register (RDRP) . . . 89
2.3.44 Port P Pull Device Enable Register (PERP) . . . 90
2.3.45 Port P Polarity Select Register (PPSP) . . . 90
2.3.46 Port P Interrupt Enable Register (PIEP) . . . 91
2.3.47 Port P Interrupt Flag Register (PIFP) . . . 91
2.3.48 PIM Reserved Registers . . . 92
2.3.49 Port J Data Register (PTJ) . . . 92
2.3.50 Port J Input Register (PTIJ) . . . 93
2.3.51 Port J Data Direction Register (DDRJ) . . . 93
2.3.52 Port J Reduced Drive Register (RDRJ) . . . 94
2.3.53 Port J Pull Device Enable Register (PERJ) . . . 94
2.3.54 Port J Polarity Select Register (PPSJ) . . . 95
2.3.55 Port J Interrupt Enable Register (PIEJ) . . . 95
2.3.56 Port J Interrupt Flag Register (PIFJ) . . . 96
2.3.57 Port AD Data Register (PT0AD) . . . 96
2.3.58 Port AD Data Register (PT1AD) . . . 97
2.3.59 Port AD Data Direction Register (DDR0AD) . . . 97
2.3.60 Port AD Data Direction Register (DDR1AD) . . . 98
2.3.61 Port AD Reduced Drive Register (RDR0AD) . . . 98
2.3.62 Port AD Reduced Drive Register (RDR1AD) . . . 99
2.3.63 Port AD Pull Up Enable Register (PER0AD) . . . 99
2.3.64 Port AD Pull Up Enable Register (PER1AD) . . . 100
2.3.65 PIM Reserved Registers . . . 100
2.4 Functional Description . . . 100
2.4.1 General . . . 100
2.4.2 Registers . . . 100
2.4.3 Pins and Ports . . . 103
2.4.4 Pin interrupts . . . 105
2.5 Initialization Information . . . 106
2.5.1 Port Data and Data Direction Register writes . . . 106

Chapter 3
Memory Map Control (S12PMMCV1)

3.1 Introduction . . . 107
3.1.1 Glossary . . . 107
3.1.2 Overview . . . 108
3.1.3 Features . . . 108
3.1.4 Modes of Operation . . . 108
3.1.5 Block Diagram . . . 108

3.2 External Signal Description . . . 109
3.3 Memory Map and Registers . . . 109
3.3.1 Module Memory Map . . . 109
3.3.2 Register Descriptions . . . 110
3.4 Functional Description . . . 113
3.4.1 MCU Operating Modes . . . 113
3.4.2 Memory Map Scheme . . . 114
3.5 Implemented Memory in the System Memory Architecture . . . 117
3.5.1 Chip Bus Control . . . 119
3.5.2 Interrupts . . . 119
3.6 Initialization/Application Information . . . 120
3.6.1 CALL and RTC Instructions . . . 120

Chapter 4
Interrupt Module (S12SINTV1)

4.1 Introduction . . . 123
4.1.1 Glossary . . . 123
4.1.2 Features . . . 123
4.1.3 Modes of Operation . . . 124
4.1.4 Block Diagram . . . 124
4.2 External Signal Description . . . 125
4.3 Memory Map and Register Definition . . . 125
4.3.1 Register Descriptions . . . 125
4.4 Functional Description . . . 126
4.4.1 S12S Exception Requests . . . 126
4.4.2 Interrupt Prioritization . . . 126
4.4.3 Reset Exception Requests . . . 127
4.4.4 Exception Priority . . . 127
4.5 Initialization/Application Information . . . 128
4.5.1 Initialization . . . 128
4.5.2 Interrupt Nesting . . . 128
4.5.3 Wake Up from Stop or Wait Mode . . . 128

Chapter 5
Background Debug Module (S12SBDMV1)

5.1 Introduction . . . 131
5.1.1 Features . . . 132
5.1.2 Modes of Operation . . . 132
5.1.3 Block Diagram . . . 133
5.2 External Signal Description . . . 133
5.3 Memory Map and Register Definition . . . 134
5.3.1 Module Memory Map . . . 134
5.3.2 Register Descriptions . . . 134
5.3.3 Family ID Assignment . . . 138

5.4 Functional Description . . . 138
5.4.1 Security . . . 138
5.4.2 Enabling and Activating BDM . . . 138
5.4.3 BDM Hardware Commands . . . 139
5.4.4 Standard BDM Firmware Commands . . . 140
5.4.5 BDM Command Structure . . . 141
5.4.6 BDM Serial Interface . . . 143
5.4.7 Serial Interface Hardware Handshake Protocol . . . 146
5.4.8 Hardware Handshake Abort Procedure . . . 148
5.4.9 SYNC — Request Timed Reference Pulse . . . 151
5.4.10 Instruction Tracing . . . 151
5.4.11 Serial Communication Time Out . . . 152

Chapter 6
S12S Debug Module (S12SDBGV2)

6.1 Introduction . . . 155
6.1.1 Glossary Of Terms . . . 155
6.1.2 Overview . . . 156
6.1.3 Features . . . 156
6.1.4 Modes of Operation . . . 157
6.1.5 Block Diagram . . . 157
6.2 External Signal Description . . . 157
6.3 Memory Map and Registers . . . 158
6.3.1 Module Memory Map . . . 158
6.3.2 Register Descriptions . . . 159
6.4 Functional Description . . . 174
6.4.1 S12SDBG Operation . . . 174
6.4.2 Comparator Modes . . . 175
6.4.3 Match Modes (Forced or Tagged) . . . 179
6.4.4 State Sequence Control . . . 180
6.4.5 Trace Buffer Operation . . . 181
6.4.6 Tagging . . . 187
6.4.7 Breakpoints . . . 187
6.5 Application Information . . . 189
6.5.1 State Machine scenarios . . . 189
6.5.2 Scenario 1 . . . 190
6.5.3 Scenario 2 . . . 190
6.5.4 Scenario 3 . . . 191
6.5.5 Scenario 4 . . . 191
6.5.6 Scenario 5 . . . 192
6.5.7 Scenario 6 . . . 192
6.5.8 Scenario 7 . . . 192
6.5.9 Scenario 8 . . . 193
6.5.10 Scenario 9 . . . 194
6.5.11 Scenario 10 . . . 194

Chapter 7
S12 Clock, Reset and Power Management Unit (S12CPMU)

7.1 Introduction . . . 197
7.1.1 Features . . . 197
7.1.2 Modes of Operation . . . 199
7.1.3 S12CPMU Block Diagram . . . 201
7.2 Signal Description . . . 202
7.2.1 $\overline{\text{RESET}}$ . . . 202
7.2.2 EXTAL and XTAL . . . 202
7.2.3 TEMPSENSE — temperature sensor output voltage . . . 203
7.2.4 VDDR — Regulator Power Input Pin . . . 203
7.2.5 VDDA, VSSA — Regulator Reference Supply Pins . . . 203
7.2.6 VSS, VSSPLL— Ground Pins . . . 203
7.2.7 VDDX, VSSX— Pad Supply Pins . . . 203
7.2.8 API_EXTCLK — API external clock output pin . . . 203
7.3 Memory Map and Registers . . . 204
7.3.1 Module Memory Map . . . 204
7.3.2 Register Descriptions . . . 206
7.4 Functional Description . . . 237
7.4.1 Phase Locked Loop with Internal Filter (PLL) . . . 237
7.4.2 Startup from Reset . . . 239
7.4.3 Stop Mode using PLLCLK as Bus Clock . . . 239
7.4.4 Full Stop Mode using Oscillator Clock as Bus Clock . . . 240
7.4.5 External Oscillator . . . 241
7.4.6 System Clock Configurations . . . 244
7.5 Resets . . . 246
7.5.1 General . . . 246
7.5.2 Description of Reset Operation . . . 246
7.5.3 Power-On Reset (POR) . . . 248
7.5.4 Low-Voltage Reset (LVR) . . . 248
7.6 Interrupts . . . 248
7.6.1 Description of Interrupt Operation . . . 249
7.7 Initialization/Application Information . . . 250

Chapter 8
Freescale's Scalable Controller Area Network (S12MSCANV3)

8.1 Introduction . . . 251
8.1.1 Glossary . . . 252
8.1.2 Block Diagram . . . 252
8.1.3 Features . . . 253
8.1.4 Modes of Operation . . . 253
8.2 External Signal Description . . . 253
8.2.1 RXCAN — CAN Receiver Input Pin . . . 253
8.2.2 TXCAN — CAN Transmitter Output Pin . . . 254

8.2.3 CAN System 254
8.3 Memory Map and Register Definition 254
8.3.1 Module Memory Map 254
8.3.2 Register Descriptions 256
8.3.3 Programmer’s Model of Message Storage 275
8.4 Functional Description 285
8.4.1 General 285
8.4.2 Message Storage 286
8.4.3 Identifier Acceptance Filter 289
8.4.4 Modes of Operation 295
8.4.5 Low-Power Options 297
8.4.6 Reset Initialization 301
8.4.7 Interrupts 301
8.5 Initialization/Application Information 303
8.5.1 MSCAN initialization 303
8.5.2 Bus-Off Recovery 303

Chapter 9
Analog-to-Digital Converter (ADC12B10C)

9.1 Introduction 305
9.1.1 Features 305
9.1.2 Modes of Operation 306
9.1.3 Block Diagram 307
9.2 Signal Description 308
9.2.1 Detailed Signal Descriptions 308
9.3 Memory Map and Register Definition 308
9.3.1 Module Memory Map 308
9.3.2 Register Descriptions 310
9.4 Functional Description 324
9.4.1 Analog Sub-Block 325
9.4.2 Digital Sub-Block 325
9.5 Resets 326
9.6 Interrupts 327

Chapter 10
Pulse-Width Modulator (PWM8B6CV1) Block Description

10.1 Introduction 329
10.1.1 Features 329
10.1.2 Modes of Operation 329
10.1.3 Block Diagram 330
10.2 External Signal Description 330
10.2.1 PWM5 — Pulse Width Modulator Channel 5 Pin 330
10.2.2 PWM4 — Pulse Width Modulator Channel 4 Pin 330
10.2.3 PWM3 — Pulse Width Modulator Channel 3 Pin 330

10.2.4 PWM2 — Pulse Width Modulator Channel 2 Pin . . . 331
10.2.5 PWM1 — Pulse Width Modulator Channel 1 Pin . . . 331
10.2.6 PWM0 — Pulse Width Modulator Channel 0 Pin . . . 331
10.3 Memory Map and Register Definition . . . 331
10.3.1 Module Memory Map . . . 331
10.3.2 Register Descriptions . . . 332
10.4 Functional Description . . . 352
10.4.1 PWM Clock Select . . . 352
10.4.2 PWM Channel Timers . . . 355
10.5 Resets . . . 362
10.6 Interrupts . . . 362

Chapter 11
Serial Communication Interface (S12SCIV5)

11.1 Introduction . . . 363
11.1.1 Glossary . . . 363
11.1.2 Features . . . 364
11.1.3 Modes of Operation . . . 364
11.1.4 Block Diagram . . . 365
11.2 External Signal Description . . . 365
11.2.1 TXD — Transmit Pin . . . 365
11.2.2 RXD — Receive Pin . . . 365
11.3 Memory Map and Register Definition . . . 365
11.3.1 Module Memory Map and Register Definition . . . 366
11.3.2 Register Descriptions . . . 366
11.4 Functional Description . . . 376
11.4.1 Infrared Interface Submodule . . . 377
11.4.2 LIN Support . . . 378
11.4.3 Data Format . . . 378
11.4.4 Baud Rate Generation . . . 380
11.4.5 Transmitter . . . 381
11.4.6 Receiver . . . 386
11.4.7 Single-Wire Operation . . . 394
11.4.8 Loop Operation . . . 395
11.5 Initialization/Application Information . . . 395
11.5.1 Reset Initialization . . . 395
11.5.2 Modes of Operation . . . 395
11.5.3 Interrupt Operation . . . 396
11.5.4 Recovery from Wait Mode . . . 398
11.5.5 Recovery from Stop Mode . . . 398

Chapter 12
Serial Peripheral Interface (S12SPIV5)

12.1 Introduction . . . 399

12.1.1 Glossary of Terms . . . 399
12.1.2 Features . . . 399
12.1.3 Modes of Operation . . . 399
12.1.4 Block Diagram . . . 400
12.2 External Signal Description . . . 401
12.2.1 MOSI — Master Out/Slave In Pin . . . 401
12.2.2 MISO — Master In/Slave Out Pin . . . 401
12.2.3 $\overline{SS}$ — Slave Select Pin . . . 402
12.2.4 SCK — Serial Clock Pin . . . 402
12.3 Memory Map and Register Definition . . . 402
12.3.1 Module Memory Map . . . 402
12.3.2 Register Descriptions . . . 403
12.4 Functional Description . . . 411
12.4.1 Master Mode . . . 412
12.4.2 Slave Mode . . . 413
12.4.3 Transmission Formats . . . 414
12.4.4 SPI Baud Rate Generation . . . 419
12.4.5 Special Features . . . 420
12.4.6 Error Conditions . . . 421
12.4.7 Low Power Mode Options . . . 422

Chapter 13
128 KByte Flash Module (S12FTMRC128K1V1)

13.1 Introduction . . . 425
13.1.1 Glossary . . . 426
13.1.2 Features . . . 427
13.1.3 Block Diagram . . . 427
13.2 External Signal Description . . . 428
13.3 Memory Map and Registers . . . 429
13.3.1 Module Memory Map . . . 429
13.3.2 Register Descriptions . . . 432
13.4 Functional Description . . . 450
13.4.1 Modes of Operation . . . 450
13.4.2 IFR Version ID Word . . . 450
13.4.3 Flash Command Operations . . . 450
13.4.4 Allowed Simultaneous P-Flash and D-Flash Operations . . . 455
13.4.5 Flash Command Description . . . 455
13.4.6 Interrupts . . . 469
13.4.7 Wait Mode . . . 470
13.4.8 Stop Mode . . . 470
13.5 Security . . . 470
13.5.1 Unsecuring the MCU using Backdoor Key Access . . . 470
13.5.2 Unsecuring the MCU in Special Single Chip Mode using BDM . . . 471
13.5.3 Mode and Security Effects on Flash Command Availability . . . 472
13.6 Initialization . . . 472

Chapter 14
Timer Module (TIM16B8CV2) Block Description

14.1 Introduction . . . 473
14.1.1 Features . . . 474
14.1.2 Modes of Operation . . . 474
14.1.3 Block Diagrams . . . 475
14.2 External Signal Description . . . 477
14.2.1 IOC7 — Input Capture and Output Compare Channel 7 Pin . . . 477
14.2.2 IOC6 — Input Capture and Output Compare Channel 6 Pin . . . 477
14.2.3 IOC5 — Input Capture and Output Compare Channel 5 Pin . . . 477
14.2.4 IOC4 — Input Capture and Output Compare Channel 4 Pin . . . 477
14.2.5 IOC3 — Input Capture and Output Compare Channel 3 Pin . . . 477
14.2.6 IOC2 — Input Capture and Output Compare Channel 2 Pin . . . 477
14.2.7 IOC1 — Input Capture and Output Compare Channel 1 Pin . . . 478
14.2.8 IOC0 — Input Capture and Output Compare Channel 0 Pin . . . 478
14.3 Memory Map and Register Definition . . . 478
14.3.1 Module Memory Map . . . 478
14.3.2 Register Descriptions . . . 478
14.4 Functional Description . . . 495
14.4.1 Prescaler . . . 496
14.4.2 Input Capture . . . 497
14.4.3 Output Compare . . . 497
14.4.4 Pulse Accumulator . . . 498
14.4.5 Event Counter Mode . . . 498
14.4.6 Gated Time Accumulation Mode . . . 498
14.5 Resets . . . 499
14.6 Interrupts . . . 499
14.6.1 Channel [7:0] Interrupt (C[7:0]F) . . . 499
14.6.2 Pulse Accumulator Input Interrupt (PAOVI) . . . 499
14.6.3 Pulse Accumulator Overflow Interrupt (PAOVF) . . . 499
14.6.4 Timer Overflow Interrupt (TOF) . . . 500

Appendix A
Electrical Characteristics

A.1 General . . . 501
A.1.1 Parameter Classification . . . 501
A.1.2 Power Supply . . . 501
A.1.3 Pins . . . 502
A.1.4 Current Injection . . . 502
A.1.5 Absolute Maximum Ratings . . . 502
A.1.6 ESD Protection and Latch-up Immunity . . . 503
A.1.7 Operating Conditions . . . 504
A.1.8 Power Dissipation and Thermal Characteristics . . . 505
A.1.9 I/O Characteristics . . . 508

A.1.10 Supply Currents . . . 510
A.2 ATD Characteristics . . . 512
A.2.1 ATD Operating Characteristics . . . 512
A.2.2 Factors Influencing Accuracy . . . 513
A.2.3 ATD Accuracy . . . 514
A.3 NVM . . . 518
A.3.1 Timing Parameters . . . 518
A.3.2 NVM Reliability Parameters . . . 522
A.4 Phase Locked Loop . . . 523
A.4.1 Jitter Definitions . . . 523
A.4.2 Electrical Characteristics for the PLL . . . 525
A.5 Electrical Characteristics for the IRC1M . . . 525
A.6 Electrical Characteristics for the Oscillator (OSCLCP) . . . 526
A.7 Reset Characteristics . . . 526
A.8 Electrical Specification for Voltage Regulator . . . 527
A.9 Chip Power-up and Voltage Drops . . . 527
A.10 MSCAN . . . 529
A.11 SPI Timing . . . 529
A.11.1 Master Mode . . . 529
A.11.2 Slave Mode . . . 531

Appendix B
Ordering Information

Appendix C
Package Information

C.1 80 QFP Package Mechanical Outline . . . 536
C.2 48 QFN Package Mechanical Outline . . . 539
C.3 64 LQFP Package Mechanical Outline . . . 542

Appendix D
Detailed Register Address Map

D.1 Detailed Register Map . . . 545

Chapter 1 Device Overview MC9S12P-Family

1.1 Introduction

The MC9S12P family is an optimized, automotive, 16-bit microcontroller product line focused on low-cost, high-performance, and low pin-count. This family is intended to bridge between high-end 8-bit microcontrollers and high-performance 16-bit microcontrollers, such as the MC9S12XS family. The MC9S12P family is targeted at generic automotive applications requiring CAN or LIN/J2602 communication. Typical examples of these applications include body controllers, occupant detection, door modules, seat controllers, RKE receivers, smart actuators, lighting modules, and smart junction boxes.

The MC9S12P family uses many of the same features found on the MC9S12XS family, including error correction code (ECC) on flash memory, a separate data-flash module for diagnostic or data storage, a fast analog-to-digital converter (ATD) and a frequency modulated phase locked loop (IPLL) that improves the EMC performance.

The MC9S12P family deliver all the advantages and efficiencies of a 16-bit MCU while retaining the low cost, power consumption, EMC, and code-size efficiency advantages currently enjoyed by users of Freescale's existing 8-bit and 16-bit MCU families. Like the MC9S12XS family, the MC9S12P family run 16-bit wide accesses without wait states for all peripherals and memories. The MC9S12P family is available in 80-pin QFP, 64-pin LQFP, and 48-pin QFN package options and aims to maximize pin compatibility with the MC9S12XS family. In addition to the I/O ports available in each module, further I/O ports are available with interrupt capability allowing wake-up from stop or wait modes.

1.2 Features

This section describes the key features of the MC9S12P family.

1.2.1 MC9S12P Family Comparison

Table 1 provides a summary of different members of the MC9S12P family and their proposed features. This information is intended to provide an understanding of the range of functionality offered by this microcontroller family.

Table 1. MC9S12P Family

Feature	MC9S12P32	MC9S12P64	MC9S12P96	MC9S12P128
CPU	CPU12-V1			
Flash memory (ECC)	32 Kbytes	64 Kbytes	96 Kbytes	128 Kbytes
Data flash (ECC)	4 Kbytes			
RAM	2 Kbytes	4 Kbytes	6 Kbytes	
MSCAN	1			
SCI	1			
SPI	1			
Timer	8 ch x 16-bit			
PWM	6 ch x 8-bit			
ADC	10 ch x 12-bit			
Frequency modulated PLL	Yes			
External oscillator (4 – 16 MHz Pierce with loop control)	Yes			
Internal 1 MHz RC oscillator	Yes			
Supply voltage	3.15 V – 5.5 V			
Execution speed	Static(1) – 32 MHz			
Package	80 QFP, 64 LQFP, 48 QFN			

1. P or D Flash erasing or programming requires a minimum bus frequency of 1MHz

1.2.2 Chip-Level Features

On-chip modules available within the family include the following features:

- S12 CPU core
- Up to 128 Kbyte on-chip flash with ECC
- 4 Kbyte data flash with ECC
- Up to 6 Kbyte on-chip SRAM
- Phase locked loop (IPLL) frequency multiplier with internal filter
- 4–16 MHz amplitude controlled Pierce oscillator
- 1 MHz internal RC oscillator
- Timer module (TIM) supporting input/output channels that provide a range of 16-bit input capture, output compare, counter, and pulse accumulator functions

- Pulse width modulation (PWM) module with 6 x 8-bit channels
- 10-channel, 12-bit resolution successive approximation analog-to-digital converter (ATD)
- One serial peripheral interface (SPI) module
- One serial communication interface (SCI) module supporting LIN communications
- One multi-scalable controller area network (MSCAN) module (supporting CAN protocol 2.0A/B)
- On-chip voltage regulator (VREG) for regulation of input supply and all internal voltages
- Autonomous periodic interrupt (API)

1.3 Module Features

The following sections provide more details of the modules implemented on the MC9S12P family.

1.3.1 S12 16-Bit Central Processor Unit (CPU)

S12 CPU is a high-speed 16-bit processing unit:

- Full 16-bit data paths supports efficient arithmetic operation and high-speed math execution
- Includes many single-byte instructions. This allows much more efficient use of ROM space.
- Extensive set of indexed addressing capabilities, including:
  - Using the stack pointer as an indexing register in all indexed operations
  - Using the program counter as an indexing register in all but auto increment/decrement mode
  - Accumulator offsets using A, B, or D accumulators
  - Automatic index predecrement, preincrement, postdecrement, and postincrement (by –8 to +8)

1.3.2 On-Chip Flash with ECC

On-chip flash memory on the MC9S12P features the following:

- Up to 128 Kbyte of program flash memory
  - 32 data bits plus 7 syndrome ECC (error correction code) bits allow single bit error correction and double fault detection
  - Erase sector size 512 bytes
  - Automated program and erase algorithm
  - User margin level setting for reads
  - Protection scheme to prevent accidental program or erase
- 4 Kbyte data flash space
  - 16 data bits plus 6 syndrome ECC (error correction code) bits allow single bit error correction and double fault detection
  - Erase sector size 256 bytes
  - Automated program and erase algorithm
  - User margin level setting for reads

1.3.3 On-Chip SRAM

- Up to 6 Kbytes of general-purpose RAM

1.3.4 Main External Oscillator (XOSC)

- Loop control Pierce oscillator using a 4 MHz to 16 MHz crystal
  - Current gain control on amplitude output
  - Signal with low harmonic distortion
  - Low power
  - Good noise immunity
  - Eliminates need for external current limiting resistor
  - Transconductance sized for optimum start-up margin for typical crystals

1.3.5 Internal RC Oscillator (IRC)

- Trimmable internal reference clock.
  - Frequency: 1 MHz
  - Trimmed accuracy over –40˚C to +125˚C ambient temperature range: ±1.5%

1.3.6 Internal Phase-Locked Loop (IPLL)

- Phase-locked-loop clock frequency multiplier
  - No external components required
  - Reference divider and multiplier allow large variety of clock rates
  - Automatic bandwidth control mode for low-jitter operation
  - Automatic frequency lock detector
  - Configurable option to spread spectrum for reduced EMC radiation (frequency modulation)
  - Reference clock sources:
    - External 4–16 MHz resonator/crystal (XOSC)
    - Internal 1 MHz RC oscillator (IRC)

1.3.7 System Integrity Support

- Power-on reset (POR)
- System reset generation
- Illegal address detection with reset
- Low-voltage detection with interrupt or reset
- Real time interrupt (RTI)
- Computer operating properly (COP) watchdog
  - Configurable as window COP for enhanced failure detection

  - Initialized out of reset using option bits located in flash memory
- Clock monitor supervising the correct function of the oscillator

1.3.8 Timer (TIM)

- 8 x 16-bit channels for input capture or output compare
- 16-bit free-running counter with 7-bit precision prescaler
- 1 x 16-bit pulse accumulator

1.3.9 Pulse Width Modulation Module (PWM)

- 6 channel x 8-bit or 3 channel x 16-bit pulse width modulator
  - Programmable period and duty cycle per channel
  - Center-aligned or left-aligned outputs
  - Programmable clock select logic with a wide range of frequencies

1.3.10 Controller Area Network Module (MSCAN)

- 1 Mbit per second, CAN 2.0 A, B software compatible
  - Standard and extended data frames
  - 0–8 bytes data length
  - Programmable bit rate up to 1 Mbps
- Five receive buffers with FIFO storage scheme
- Three transmit buffers with internal prioritization
- Flexible identifier acceptance filter programmable as:
  - 2 x 32-bit
  - 4 x 16-bit
  - 8 x 8-bit
- Wakeup with integrated low pass filter option
- Loop back for self test
- Listen-only mode to monitor CAN bus
- Bus-off recovery by software intervention or automatically
- 16-bit time stamp of transmitted/received messages

1.3.11 Serial Communication Interface Module (SCI)

- Full-duplex or single-wire operation
- Standard mark/space non-return-to-zero (NRZ) format
- Selectable IrDA 1.4 return-to-zero-inverted (RZI) format with programmable pulse widths
- 13-bit baud rate selection

- Programmable character length
- Programmable polarity for transmitter and receiver
- Active edge receive wakeup
- Break detect and transmit collision detect supporting LIN

1.3.12 Serial Peripheral Interface Module (SPI)

- Configurable 8- or 16-bit data size
- Full-duplex or single-wire bidirectional
- Double-buffered transmit and receive
- Master or slave mode
- MSB-first or LSB-first shifting
- Serial clock phase and polarity options

1.3.13 Analog-to-Digital Converter Module (ATD)

- 10-channel, 12-bit analog-to-digital converter
  - 3 us single conversion time
  - 8-/10-/12-bit resolution
  - Left or right justified result data
  - Internal oscillator for conversion in stop modes
  - Wakeup from low power modes on analog comparison > or <= match
  - Continuous conversion mode
  - Multiple channel scans
- Pins can also be used as digital I/O

1.3.14 On-Chip Voltage Regulator (VREG)

- Linear voltage regulator with bandgap reference
- Low-voltage detect (LVD) with low-voltage interrupt (LVI)
- Power-on reset (POR) circuit
- Low-voltage reset (LVR)
- High temperature sensor

1.3.15 Background Debug (BDM)

- Non-intrusive memory access commands
- Supports in-circuit programming of on-chip nonvolatile memory

1.3.16 Debugger (DBG)

- Trace buffer with depth of 64 entries
- Three comparators (A, B and C)
  - Comparators A compares the full address bus and full 16-bit data bus
  - Exact address or address range comparisons
- Two types of comparator matches
  - Tagged This matches just before a specific instruction begins execution
  - Force This is valid on the first instruction boundary after a match occurs
- Four trace modes
- Four stage state sequencer

1.4 Block Diagram

Figure 1-1 shows a block diagram of the MC9S12P-Family devices

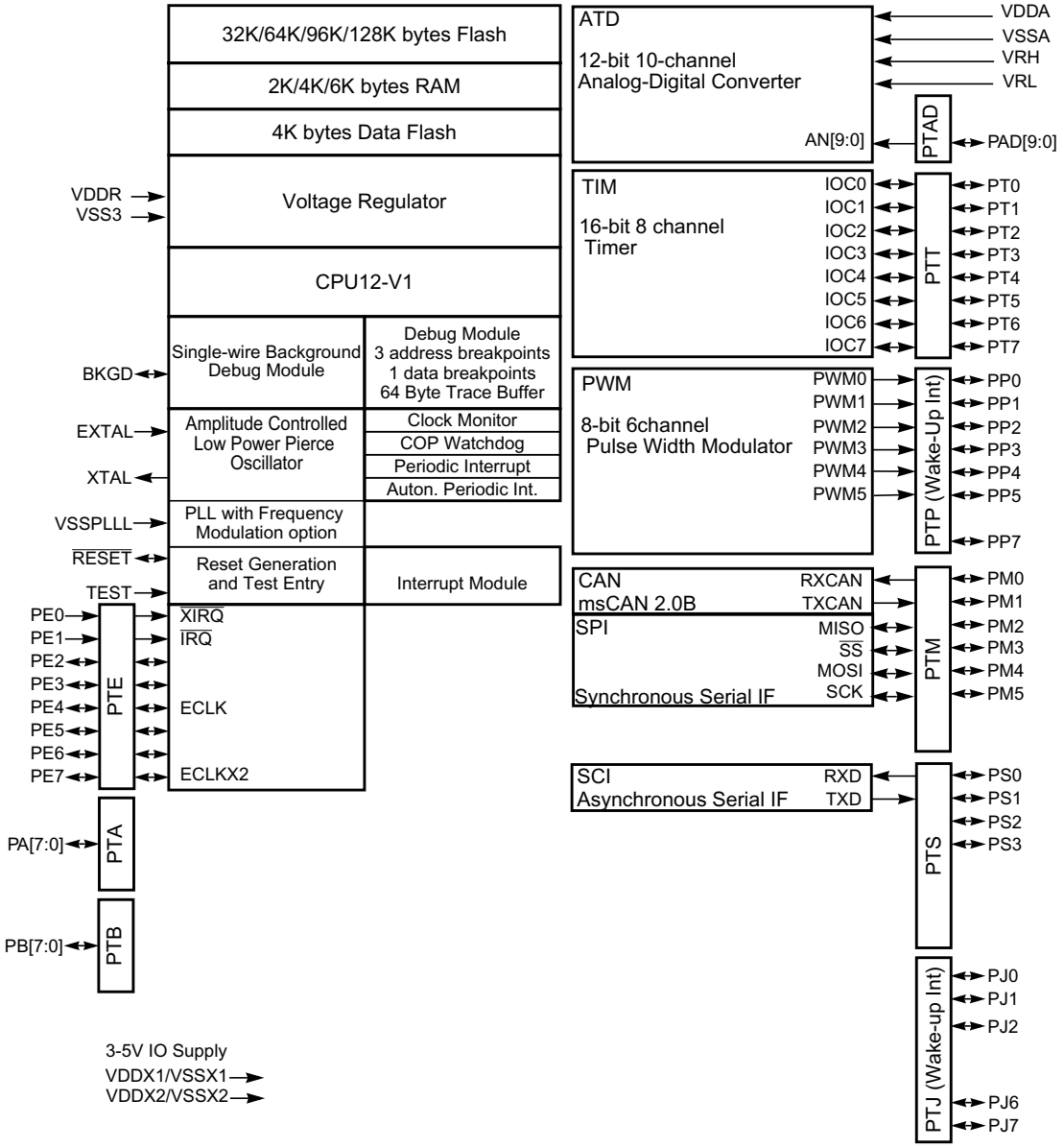

Figure 1-1. MC9S12P-Family Block Diagram

1.5 Device Memory Map

Table 1-2 shows the device register memory map.

Table 1-2. Device Register Memory Map

Address	Module	Size (Bytes)
0x0000–0x0009	PIM (port integration module)	10
0x000A–0x000B	MMC (memory map control)	2
0x000C–0x000D	PIM (port integration module)	2
0x000E–0x000F	Reserved	2
0x0010–0x0017	MMC (memory map control)	8
0x0018–0x0019	Reserved	2
0x001A–0x001B	Device ID register	2
0x001C–0x001F	PIM (port integration module)	4
0x0020–0x002F	DBG (debug module)	16
0x0030–0x0033	Reserved	4
0x0034–0x003F	CPMU (clock and power management)	12
0x0040–0x006F	TIM (timer module)	48
0x0070–0x009F	ATD (analog-to-digital converter 12 bit 10-channel)	48
0x00A0–0x00C7	PWM (pulse-width modulator 6 channels)	40
0x00C8–0x00CF	SCI (serial communications interface)	8
0x00D0–0x00D7	Reserved	8
0x00D8–0x00DF	SPI (serial peripheral interface)	8
0x00E0–0x00FF	Reserved	32
0x0100–0x0113	FTMRC control registers	20
0x0114–0x011F	Reserved	12
0x0120	INT (interrupt module)	1
0x0121–0x013F	Reserved	31
0x0140–0x017F	CAN	64
0x0180–0x023F	Reserved	192
0x0240–0x027F	PIM (port integration module)	64
0x0280–0x02BF	Reserved	64
0x02C0–0x02EF	Reserved	48
0x02F0–0x02FF	CPMU (clock and power management)	16
0x0300–0x03FF	Reserved	256

NOTE

Reserved register space shown in Table 1-2 is not allocated to any module. This register space is reserved for future use. Writing to these locations have no effect. Read access to these locations returns zero.

Figure 1-2 shows S12P CPU and BDM local address translation to the global memory map. It indicates also the location of the internal resources in the memory map. Table 1-3. shows the mapping of D-Flash and unpaged P-Flash memory. The whole 256K global memory space is visible through the P-Flash window located in the 64k local memory map located at 0x8000 - 0xBFFF using the PPAGE register.

Table 1-3. MC9S12P -Family mapping for D-Flash and unpaged P-Flash

	Local 64K memory map	Global 256K memory map
D-Flash	0x0400 - 0x13FF	0x0_4400 - 0x0_53FF
P-Flash	0x1400 - 0x27FF(1)	0x3_1400 -0x3_27FF(2)
	0x4000 - 0x7FFF	0x3_4000 - 0x3_7FFF
	0xC000 - 0xFFFF	0x3_C000 - 0x3_FFFF

1. 0x2FFF for MC9S12P64 because of 4K RAM size
2. 0x3_2FFF for MC9S12P64 because of 4K RAM size

Table 1-4. Derivatives

Feature	MC9S12P32	MC9S12P64	MC9S12P96	MC9S12P128
P-Flash size	32KB	64KB	96KB	128KB
PF_LOW PPAGES	0x3_8000 0x0E - 0x0F	0x3_0000 0x0C - 0x0F	0x2_8000 0x0A - 0x0F	0x2_0000 0x08 - 0x0F
RAMSIZE	2KB	4KB	6KB	
RAM_LOW	0x0_3800	0x0_3000	0x0_2800	

Figure 1-2. MC9S12P-Family Global Memory Map

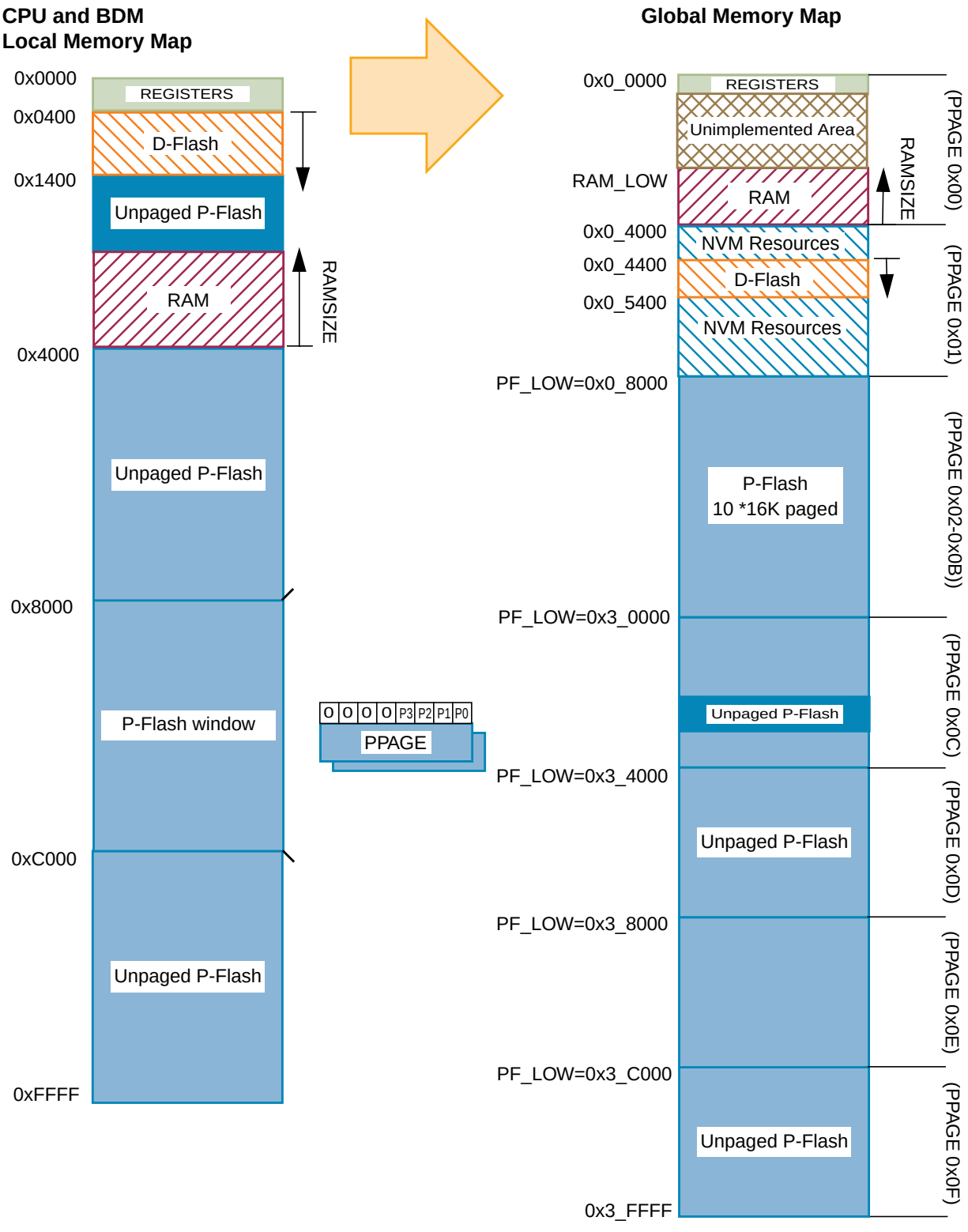

1.6 Part ID Assignments

The part ID is located in two 8-bit registers PARTIDH and PARTIDL (addresses 0x001A and 0x001B). The read-only value is a unique part ID for each revision of the chip. Table 1-5 shows the assigned part ID number and Mask Set number.

The Version ID in Table 1-5. is a word located in a flash information row. The version ID number indicates a specific version of internal NVM controller.

Table 1-5. Assigned Part ID Numbers

Device	Mask Set Number	Part ID[1]	Version ID
MC9S12P128	0M01N	$3980	$FF
MC9S12P96	0M01N	$3980	$FF
MC9S12P64	0M01N	$3980	$FF
MC9S12P32	0M01N	$3980	$FF

1. The coding is as follows:
   Bit 15-12: Major family identifier
   Bit 11-6: Minor family identifier
   Bit 5-4: Major mask set revision number including FAB transfers
   Bit 3-0: Minor — non full — mask set revision

1.7 Signal Description

This section describes signals that connect off-chip. It includes a pinout diagram, a table of signal properties, and detailed discussion of signals. It is built from the signal description sections of the individual IP blocks on the device.

1.7.1 Device Pinout

Figure 1-3. MC9S12P-Family 80 QFP pinout

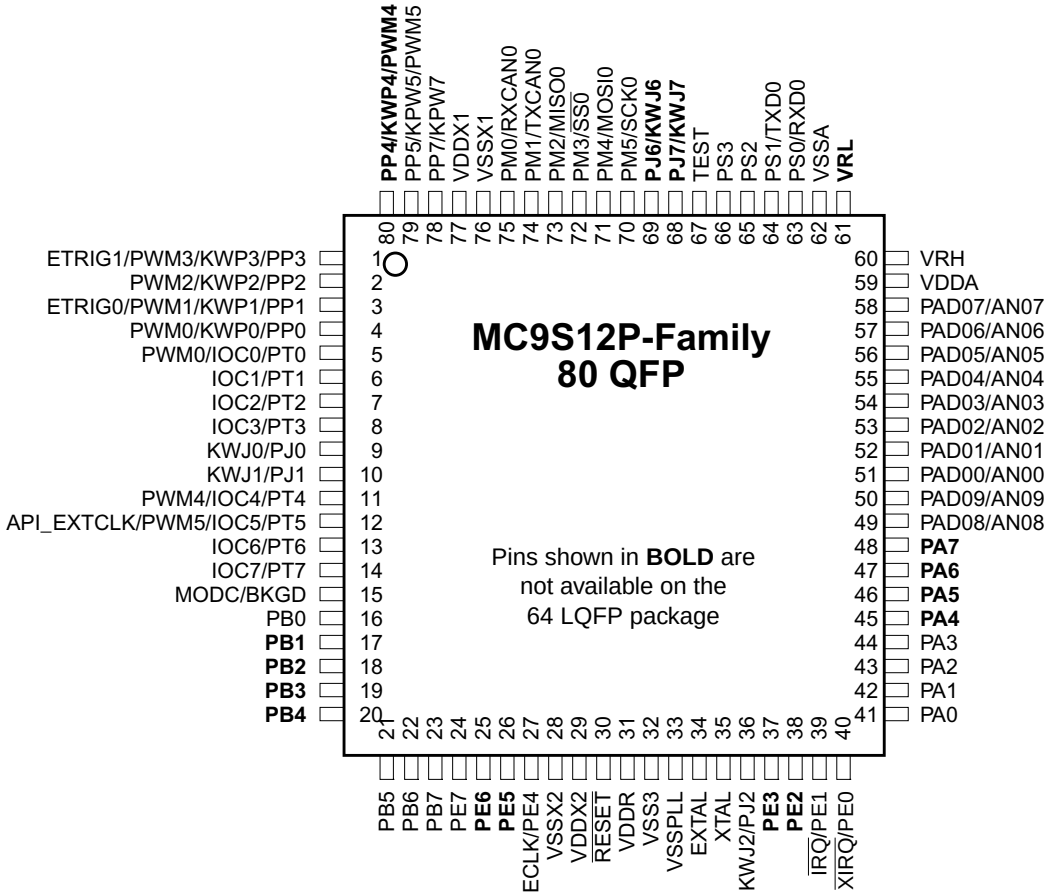

Figure 1-4. MC9S12P-Family 64 LQFP pinout

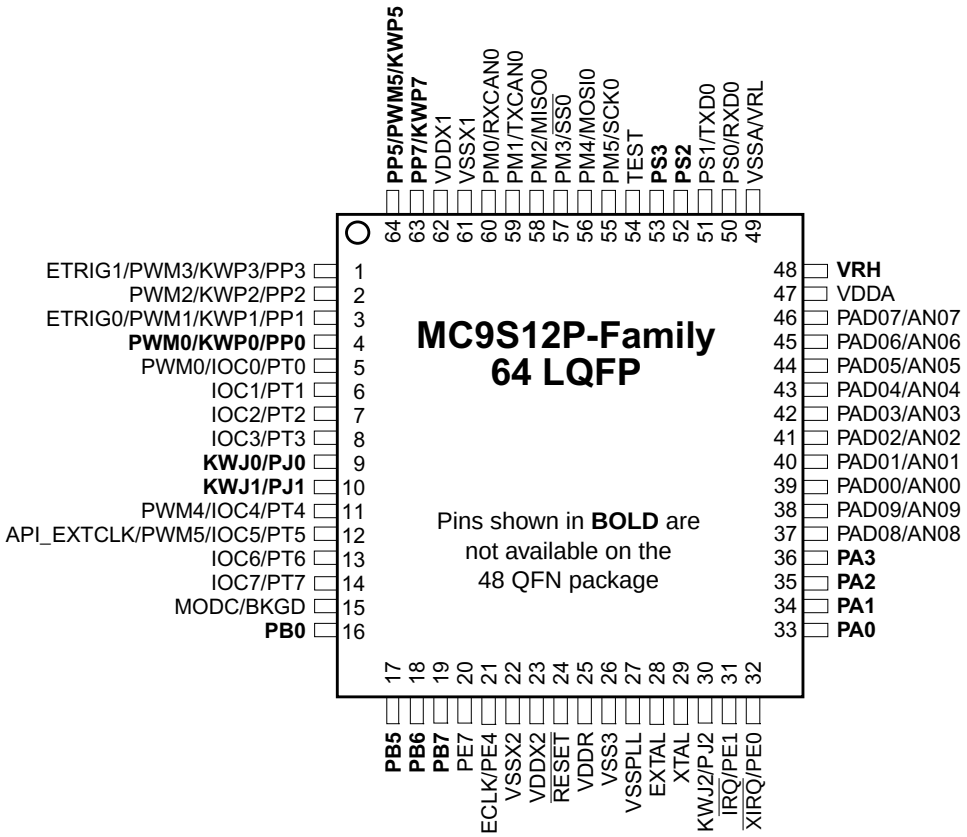

Figure 1-5. MC9S12P-Family 48 QFN pinout

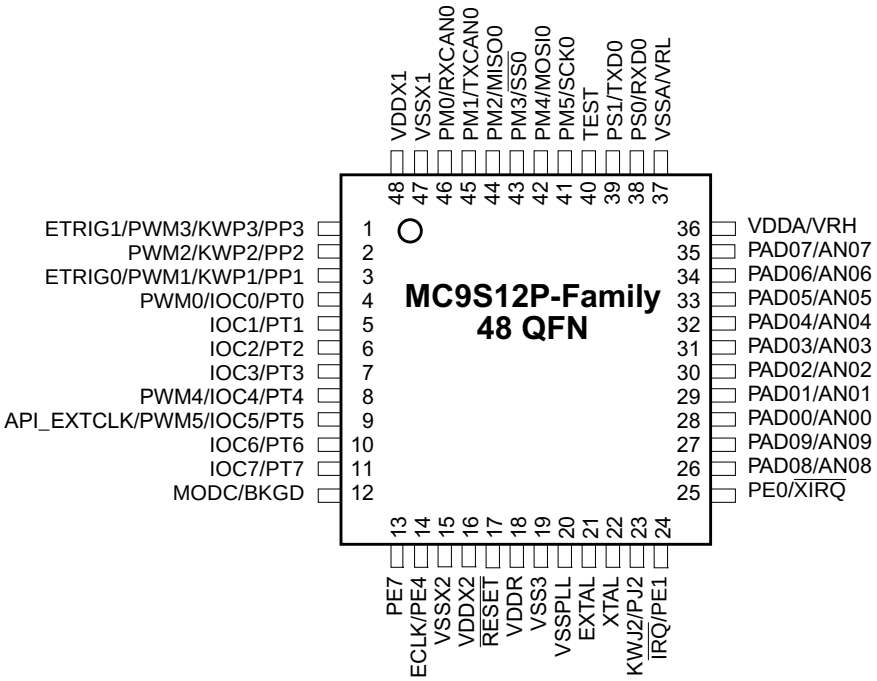

1.7.2 Pin Assignment Overview

Table 1-6 provides a summary of which Ports are available for each package option. Routing of pin functions is summarized in Table 1-7.

Table 1-6. Port Availability by Package Option

Port	80 QFP	64 LQFP	48 QFN
Port AD/ADC Channels	10/10	10/10	10/10
Port A pins	8	4	0
Port B pins	8	4	0
Port E pins inc. IRQ/XIRQ input only	8	4	4
Port J	5	3	1
Port M	6	6	6
Port P	7	6	3
Port S	4	4	2

Table 1-6. Port Availability by Package Option

Port	80 QFP	64 LQFP	48 QFN
Port T	8	8	8
Sum of Ports	**64**	**49**	**34**
I/O Power Pairs VDDX/VSSX	2/2	2/2	2/2

Table 1-7. Peripheral - Port Routing Options[1]

	PWM0	PWM4	PWM5
PT0	O		
PT4		O	
PT5			O

1. "O" denotes a possible rerouting under software control

Table 1-8 provides a pin out summary listing the availability and functionality of individual pins for each package option.

Table 1-8. Pin-Out Summary[1]

Package Pin			Function			Power Supply	Internal Pull Resistor		Description
QFP 80	LQFP 64	QFN 48	Pin	2nd Func.	3rd Func.		CTRL	Reset State	
1	1	1	PP3	KWP3	PWM3	VDDX	PERP/PPSP	Disabled	Port P I/O, interrupt, PWM channel
2	2	2	PP2	KWP2	PWM2	VDDX	PERP/PPSP	Disabled	Port P I/O, interrupt, PWM channel
3	3	3	PP1	KWP1	PWM1	VDDX	PERP/PPSP	Disabled	Port P I/O, interrupt, PWM channel
4	4	-	PP0	KWP0	PWM0	VDDX	PERP/PPSP	Disabled	Port P I/O, interrupt, PWM/ channel
5	5	4	PT0	IOC0	PWM0	VDDX	PERT/PPST	Disabled	Port T I/O, TIM channel
6	6	5	PT1	IOC1	—	VDDX	PERT/PPST	Disabled	Port T I/O, TIM channel
7	7	6	PT2	IOC2	—	VDDX	PERT/PPST	Disabled	Port T I/O, TIM channel
8	8	7	PT3	IOC3	—	VDDX	PERT/PPST	Disabled	Port T I/O, TIM channel
9	9	-	PJ0	KWJ0	—	VDDX	PERJ/PPSJ	Up	Port J I/O, interrupt
10	10	-	PJ1	KWJ1	—	VDDX	PERJ/PPSJ	Up	Port J I/O, interrupt
11	11	8	PT4	IOC4	PWM4	VDDX	PERT/PPST	Disabled	Port T I/O, PWM/TIM channel
12	12	9	PT5	IOC5	PWM5 or API_EXTCLK	VDDX	PERT/PPST	Disabled	Port T I/O, PWM/TIM channel, API output
13	13	10	PT6	IOC6		VDDX	PERT/PPST	Disabled	Port T I/O, channel of TIM
14	14	11	PT7	IOC7		VDDX	PERT/PPST	Disabled	Port T I/O, channel of TIM
15	15	12	BKGD	MODC	—	VDDX	Always on	Up	Background debug

oaded from Arrow.com.

Table 1-8. Pin-Out Summary[1]

Package Pin			Function			Power Supply	Internal Pull Resistor		Description
QFP 80	LQFP 64	QFN 48	Pin	2nd Func.	3rd Func.		CTRL	Reset State	
16	16	-	PB0	—	—	VDDX	PUCR	Disabled	Port B I/O
17	-	-	PB1	—	—	VDDX	PUCR	Disabled	Port B I/O
18	-	-	PB2	—	—	VDDX	PUCR	Disabled	Port B I/O
19	-	-	PB3	—	—	VDDX	PUCR	Disabled	Port B I/O
20	-	-	PB4	—	—	VDDX	PUCR	Disabled	Port B I/O
21	17	-	PB5	—	—	VDDX	PUCR	Disabled	Port B I/O
22	18	-	PB6	—	—	VDDX	PUCR	Disabled	Port B I/O
23	19	-	PB7	—	—	VDDX	PUCR	Disabled	Port B I/O
24	20	13	PE7	ECLKX2	—	VDDX	PUCR	Up	Port E I/O
25	-	-	PE6	—	—	VDDX	While $\overline{\text{RESET}}$ pin is low: down		Port E I/O
26	-	-	PE5	—	—	VDDX	While $\overline{\text{RESET}}$ pin is low: down		Port E I/O
27	21	14	PE4	ECLK	—	VDDX	PUCR	Up	Port E I/O, bus clock output
28	22	15	VSSX2	—	—	—	—	—	—
29	23	16	VDDX2	—	—	—	—	—	—
30	24	17	$\overline{\text{RESET}}$	—	—	VDDX	PULLUP		External reset
31	25	18	VDDR	—	—	—	—	—	—
32	26	19	VSS3	—	—	—	—	—	—
33	27	20	VSSPLL	—	—	—	—	—	—
34	28	21	EXTAL	—	—	VDDPLL	NA	NA	Oscillator pin

oaded from Arrow.com.

Table 1-8. Pin-Out Summary[1]

Package Pin			Function			Power Supply	Internal Pull Resistor		Description
QFP 80	LQFP 64	QFN 48	Pin	2nd Func.	3rd Func.		CTRL	Reset State	
35	29	22	XTAL	—	—	VDDPLL	NA	NA	Oscillator pin
36	30	23	PJ2	KWJ2	—	VDDX	PERJ/PPSJ	Up	Port J I/O, interrupt
37	-	-	PE3	—	—	VDDX	PUCR	Up	Port E I/O
38	-	-	PE2	—	—	VDDX	PUCR	Up	Port E I/O
39	31	24	PE1	$\overline{\text{IRQ}}$	—	VDDX	PUCR	Up	Port E Input, maskable interrupt
40	32	25	PE0	$\overline{\text{XIRQ}}$	—	VDDX	PUCR	Up	Port E Input, non-maskable interrupt
41	33	-	PA0	—	—	VDDX	PUCR	Disabled	Port A I/O
42	34	-	PA1	—	—	VDDX	PUCR	Disabled	Port A I/O
43	35	-	PA2	—	—	VDDX	PUCR	Disabled	Port A I/O
44	36	-	PA3	—	—	VDDX	PUCR	Disabled	Port A I/O
45	-	-	PA4	—	—	VDDX	PUCR	Disabled	Port A I/O
46	-	-	PA5	—	—	VDDX	PUCR	Disabled	Port A I/O
47	-	-	PA6	—	—	VDDX	PUCR	Disabled	Port A I/O
48	-	-	PA7	—	—	VDDX	PUCR	Disabled	Port A I/O
49	37	26	PAD08	AN08	—	VDDA	PER1AD	Disabled	Port AD I/O, analog input of ATD
50	38	27	PAD09	AN09	—	VDDA	PER1AD	Disabled	Port AD I/O, analog input of ATD
51	39	28	PAD00	AN00	—	VDDA	PER1AD	Disabled	Port AD I/O, analog input of ATD
52	40	29	PAD01	AN01	—	VDDA	PER1AD	Disabled	Port AD I/O, analog input of ATD

oaded from Arrow.com.

Table 1-8. Pin-Out Summary[1]

Package Pin			Function			Power Supply	Internal Pull Resistor		Description
QFP 80	LQFP 64	QFN 48	Pin	2nd Func.	3rd Func.		CTRL	Reset State	
53	41	30	PAD02	AN02	—	VDDA	PER1AD	Disabled	Port AD I/O, analog input of ATD
54	42	31	PAD03	AN03	—	VDDA	PER1AD	Disabled	Port AD I/O, analog input of ATD
55	43	32	PAD04	AN04	—	VDDA	PER1AD	Disabled	Port AD I/O, analog input of ATD
56	44	33	PAD05	AN05	—	VDDA	PER1AD	Disabled	Port AD I/O, analog input of ATD
57	45	34	PAD06	AN06	—	VDDA	PER1AD	Disabled	Port AD I/O, analog input of ATD
58	46	35	PAD07	AN07	—	VDDA	PER1AD	Disabled	Port AD I/O, analog input of ATD
59	47	36	VDDA	—	—	—	—	—	—
60	48	36	VRH[2]	—	—	—	—	—	—
61	49	37	VRL[3]	—	—	—	—	—	—
62	49	37	VSSA	—	—	—	—	—	—
63	50	38	PS0	RXD	—	VDDX	PERS/PPSS	Up	Port S I/O, RXD of SCI
64	51	39	PS1	TXD	—	VDDX	PERS/PPSS	Up	Port S I/O, TXD of SCI
65	52	-	PS2		—	VDDX	PERS/PPSS	Up	Port S I/O
66	53	-	PS3		—	VDDX	PERS/PPSS	Up	Port S I/O
67	54	40	TEST	—	—	N.A.	$\overline{\text{RESET}}$ pin	DOWN	Test input
68	-	-	PJ7	KWJ7	—	VDDX	PERJ/PPSJ	Up	Port J I/O, interrupt
69	-	-	PJ6	KWJ6	—	VDDX	PERJ/PPSJ	Up	Port J I/O, interrupt
70	55	41	PM5	SCK	—	VDDX	PERM/PPSM	Disabled	Port M I/O, MISO of SPI

oaded from Arrow.com.

Table 1-8. Pin-Out Summary[1]

Package Pin			Function			Power Supply	Internal Pull Resistor		Description
QFP 80	LQFP 64	QFN 48	Pin	2nd Func.	3rd Func.		CTRL	Reset State	
71	56	42	PM4	MOSI	—	VDDX	PERM/PPSM	Disabled	Port M I/O, MOSI of SPI
72	57	43	PM3	$\overline{SS}$	—	VDDX	PERM/PPSM	Disabled	Port M I/O, SCK of SPI
73	58	44	PM2	MISO	—	VDDX	PERM/PPSM	Disabled	Port M I/O, $\overline{SS}$ of SPI0
74	59	45	PM1	TXCAN		VDDX	PERM/PPSM	Disabled	Port M I/O, TX of CAN
75	60	46	PM0	RXCAN		VDDX	PERM/PPSM	Disabled	Port M I/O, RX of CAN
76	61	47	VSSX1	—	—	—	—	—	—
77	62	48	VDDX1	—	—	—	—	—	—
78	63	-	PP7	KWP7		VDDX	PERP/PPSP	Disabled	Port P I/O, interrupt
79	64	-	PP5	KWP5	PWM5	VDDX	PERP/PPSP	Disabled	Port P I/O, interrupt, PWM channel
80	-	-	PP4	KWP4	PWM4	VDDX	PERP/PPSP	Disabled	Port P I/O, interrupt, PWM channel

1. Table shows a superset of pin functions. Not all functions are available on all derivatives
2. VRH and VDDA share single pin on 48 pin package option
3. VRL and VSSA share single pin on 64 and 48 pin package option

NOTE

For devices assembled in 48-pin and 64-pin packages all non-bonded out pins should be configured as outputs after reset in order to avoid current drawn from floating inputs. Refer to Table 1-8 for affected pins.

oaded from Arrow.com.

1.7.3 Detailed Signal Descriptions

1.7.3.1 EXTAL, XTAL — Oscillator Pins

EXTAL and XTAL are the crystal driver and external clock pins. On reset all the device clocks are derived from the internal reference clock. XTAL is the oscillator output.

1.7.3.2 $\overline{\text{RESET}}$ — External Reset Pin

The $\overline{\text{RESET}}$ pin is an active low bidirectional control signal. It acts as an input to initialize the MCU to a known start-up state, and an output when an internal MCU function causes a reset. The $\overline{\text{RESET}}$ pin has an internal pull-up device.

1.7.3.3 TEST — Test Pin

This input only pin is reserved for factory test. This pin has an internal pull-down device.

NOTE

The TEST pin must be tied to V_{SSX} in all applications.

1.7.3.4 BKGD / MODC — Background Debug and Mode Pin

The BKGD/MODC pin is used as a pseudo-open-drain pin for the background debug communication. It is used as a MCU operating mode select pin during reset. The state of this pin is latched to the MODC bit at the rising edge of $\overline{\text{RESET}}$. The BKGD pin has an internal pull-up device.

1.7.3.5 PAD[9:0] / AN[9:0] — Port AD Input Pins of ATD

PAD[9:0] are general-purpose input or output pins and analog inputs AN[9:0] of the analog-to-digital converter ATD.

1.7.3.6 PA[7:0] — Port A I/O Pins

PA[7:0] are general-purpose input or output pins.

1.7.3.7 PB[7:0] — Port B I/O Pins

PB[7:0] are general-purpose input or output pins.

1.7.3.8 PE7 — Port E I/O Pin 7 / ECLKX2

PE7 is a general-purpose input or output pin. An internal pull-up is enabled during reset. It can be configured to output ECLKX2.

1.7.3.9 PE[6:5] — Port E I/O Pin 6-5

PE[6:5] are a general-purpose input or output pins.

1.7.3.10 PE4 / ECLK — Port E I/O Pin 4

PE4 is a general-purpose input or output pin. It can be configured to drive the internal bus clock ECLK. ECLK can be used as a timing reference. The ECLK output has a programmable prescaler.

1.7.3.11 PE[3:2] — Port E I/O Pin 3

PE[3:2] are a general-purpose input or output pins.

1.7.3.12 PE1 / $\overline{\text{IRQ}}$ — Port E Input Pin 1

PE1 is a general-purpose input pin and the maskable interrupt request input that provides a means of applying asynchronous interrupt requests. This will wake up the MCU from stop or wait mode.

1.7.3.13 PE0 / $\overline{\text{XIRQ}}$ — Port E Input Pin 0

PE0 is a general-purpose input pin and the non-maskable interrupt request input that provides a means of applying asynchronous interrupt requests. This will wake up the MCU from stop or wait mode. The XIRQ interrupt is level sensitive and active low. As XIRQ is level sensitive, while this pin is low the MCU will not enter STOP mode.

1.7.3.14 PJ[7:6, 2:0] / KWJ[7:6, 2:0] — Port J I/O Pins 7-6, 2-0

PJ[7:6, 2:0] are a general-purpose input or output pins. They can be configured as keypad wakeup inputs.

1.7.3.15 PM[7:6] — Port M I/O Pins 7-6

PM[7:6] are a general-purpose input or output pins.

1.7.3.16 PM5 / SCK — Port M I/O Pin 5

PM5 is a general-purpose input or output pin. It can be configured as the serial clock pin SCK of the serial peripheral interface (SPI).

1.7.3.17 PM4 / MOSI — Port M I/O Pin 4

PM4 is a general-purpose input or output pin. It can be configured as the master output (during master mode) or slave input pin (during slave mode) MOSI for the serial peripheral interface (SPI).

1.7.3.18 PM3 / $\overline{\text{SS}}$ — Port M I/O Pin 3

PM3 is a general-purpose input or output pin.It can be configured as the slave select pin $\overline{\text{SS}}$ of the serial peripheral interface (SPI).

1.7.3.19 PM2 / MISO— Port M I/O Pin 3

PM2 is a general-purpose input or output pin. It can be configured as the master input (during master mode) or slave output pin (during slave mode) MISO for the serial peripheral interface (SPI)

1.7.3.20 PM1 / TXCAN — Port M I/O Pin 1

PM1 is a general-purpose input or output pin. It can be configured as the transmit pin TXCAN of the scalable controller area network controller (CAN).

1.7.3.21 PM0 / RXCAN — Port M I/O Pin 0

PM0 is a general-purpose input or output pin. It can be configured as the receive pin RXCAN of the scalable controller area network controller (CAN).

1.7.3.22 PP[5:0] / KWP[5:0] / PWM[5:0] — Port P I/O Pins 5-0

PP[5:0] are a general-purpose input or output pins. They can be configured as keypad wakeup inputs. They can be configured as pulse width modulator (PWM) channel 5-0 output

1.7.3.23 PP7 / KWP7 — Port P I/O Pin 7

PP7 is a general-purpose input or output pin. It can be configured as a keypad wakeup input.

1.7.3.24 PS3 — Port S I/O Pin 3

PS3 is a general-purpose input or output pin.

1.7.3.25 PS2 — Port S I/O Pin 2

PS2 is a general-purpose input or output pin.

1.7.3.26 PS1 / TXD — Port S I/O Pin 1

PS1 is a general-purpose input or output pin. It can be configured as the transmit pin TXD of serial communication interface (SCI).

1.7.3.27 PS0 / RXD — Port S I/O Pin 0

PS0 is a general-purpose input or output pin. It can be configured as the receive pin RXD of serial communication interface (SCI).

1.7.3.28 PT[7:6] / IOC[7:6] — Port T I/O Pins 7-6

PT[7:6] are general-purpose input or output pins. They can be configured as timer (TIM) channel 7-6.

1.7.3.29 PT5 / IOC5 / PWM5 / API_EXTCLK — Port T I/O Pin 5

PT5 is a general-purpose input or output pin. It can be configured as timer (TIM) channel 5, pulse width modulator (PWM) output 5 or as the output of the API_EXTCLK.

1.7.3.30 PT4 / IOC4 / PWM4 — Port T I/O Pin 4

PT4 is a general-purpose input or output pin. It can be configured as timer (TIM) channel 4 or pulse width modulator (PWM) output 4.

1.7.3.31 PT[3:1] / IOC[3:1] — Port T I/O Pin [3:1]

PT[3:1] are a general-purpose input or output pins. They can be configured as timer (TIM) channels 3-1.

1.7.3.32 PT0 / IOC0 / PWM0 — Port T I/O Pin 0

PT0 is a general-purpose input or output pin. It can be configured as timer (TIM) channel 0 or pulse width modulator (PWM) output 0.

1.7.4 Power Supply Pins

MC9S12P-Family power and ground pins are described below.

Because fast signal transitions place high, short-duration current demands on the power supply, use bypass capacitors with high-frequency characteristics and place them as close to the MCU as possible.

NOTE

All V_{SS} pins must be connected together in the application.

1.7.4.1 VDDX[2:1], VSSX[2:1] — Power and Ground Pins for I/O Drivers

External power and ground for I/O drivers. Bypass requirements depend on how heavily the MCU pins are loaded. All VDDX pins are connected together internally. All VSSX pins are connected together internally.

1.7.4.2 VDDR — Power Pin for Internal Voltage Regulator

Power supply input to the internal voltage regulator.

1.7.4.3 VSS3 — Core Ground Pin

The voltage supply of nominally 1.8V is derived from the internal voltage regulator. The return current path is through the VSS3 pin. No static external loading of these pins is permitted.

1.7.4.4 VDDA, VSSA — Power Supply Pins for ATD and Voltage Regulator

These are the power supply and ground input pins for the analog-to-digital converter and the voltage regulator.

1.7.4.5 VRH, VRL — ATD Reference Voltage Input Pins

VRH and VRL are the reference voltage input pins for the analog-to-digital converter.

1.7.4.6 VSSPLL — Ground Pin for PLL

This pin provides ground for the oscillator and the phased-locked loop. The voltage supply of nominally 1.8V is derived from the internal voltage regulator.

1.7.4.7 Power and Ground Connection Summary

Table 1-9. Power and Ground Connection Summary

Mnemonic	Nominal Voltage	Description
VDDR	5.0 V	External power supply to internal voltage regulator
VDDX[2:1]	5.0 V	External power and ground, supply to pin drivers
VSSX[2:1]	0 V	
VDDA	5.0 V	Operating voltage and ground for the analog-to-digital converters and the reference for the internal voltage regulator, allows the supply voltage to the A/D to be bypassed independently.
VSSA	0 V	
VRL	0 V	Reference voltages for the analog-to-digital converter.
VRH	5.0 V	
VSS3	0V	Internal power and ground generated by internal regulator for the internal core.
VSSPLL	0V	Provides operating voltage and ground for the phased-locked loop. This allows the supply voltage to the PLL to be bypassed independently. Internal power and ground generated by internal regulator.

1.8 System Clock Description

For the system clock description please refer to chapter Chapter 7, “S12 Clock, Reset and Power Management Unit (S12CPMU).

1.9 Modes of Operation

The MCU can operate in different modes. These are described in 1.9.1 Chip Configuration Summary.

The MCU can operate in different power modes to facilitate power saving when full system performance is not required. These are described in 1.9.2 Low Power Operation.

Some modules feature a software programmable option to freeze the module status whilst the background debug module is active to facilitate debugging.

1.9.1 Chip Configuration Summary

The different modes and the security state of the MCU affect the debug features (enabled or disabled).

The operating mode out of reset is determined by the state of the MODC signal during reset (see Table 1-10). The MODC bit in the MODE register shows the current operating mode and provides limited mode switching during operation. The state of the MODC signal is latched into this bit on the rising edge of $\overline{\text{RESET}}$.

Table 1-10. Chip Modes

Chip Modes	MODC
Normal single chip	1
Special single chip	0

1.9.1.1 Normal Single-Chip Mode

This mode is intended for normal device operation. The opcode from the on-chip memory is being executed after reset (requires the reset vector to be programmed correctly). The processor program is executed from internal memory.

1.9.1.2 Special Single-Chip Mode

This mode is used for debugging single-chip operation, boot-strapping, or security related operations. The background debug module BDM is active in this mode. The CPU executes a monitor program located in an on-chip ROM. BDM firmware waits for additional serial commands through the BKGD pin.

1.9.2 Low Power Operation

The MC9S12P has two static low-power modes Pseudo Stop and Stop Mode. For a detailed description refer to S12CPMU section.

1.10 Security

The MCU security mechanism prevents unauthorized access to the Flash memory. Refer to **Section 5.4.1 Security** and **Section 13.5 Security**

1.11 Resets and Interrupts

Consult the S12 CPU manual and the S12SINT section for information on exception processing.

1.11.1 Resets

Table 1-11. lists all Reset sources and the vector locations. Resets are explained in detail in the **Section Chapter 7 S12 Clock, Reset and Power Management Unit (S12CPMU)**

Table 1-11. Reset Sources and Vector Locations

Vector Address	Reset Source	CCR Mask	Local Enable
$FFFE	Power-On Reset (POR)	None	None
$FFFE	Low Voltage Reset (LVR)	None	None
$FFFE	External pin $\overline{\text{RESET}}$	None	None
$FFFE	Illegal Address Reset	None	None
$FFFC	Clock monitor reset	None	OSCE Bit in CPMUOSC register
$FFFA	COP watchdog reset	None	CR[2:0] in CPMUCOP register

1.11.2 Interrupt Vectors

Table 1-12 lists all interrupt sources and vectors in the default order of priority. The interrupt module (see **Section Chapter 4 Interrupt Module (S12SINTV1)**) provides an interrupt vector base register (IVBR) to relocate the vectors.

Table 1-12. Interrupt Vector Locations (Sheet 1 of 3)

Vector Address[1]	Interrupt Source	CCR Mask	Local Enable	Wake up from STOP	Wakeup from WAIT
Vector base + $F8	Unimplemented instruction trap	None	None	-	-
Vector base+ $F6	SWI	None	None	-	-
Vector base+ $F4	$\overline{\text{XIRQ}}$	X Bit	None	Yes	Yes
Vector base+ $F2	$\overline{\text{IRQ}}$	I bit	IRQCR (IRQEN)	Yes	Yes

Table 1-12. Interrupt Vector Locations (Sheet 2 of 3)

Vector Address[1]	Interrupt Source	CCR Mask	Local Enable	Wake up from STOP	Wakeup from WAIT
Vector base+ $F0	RTI timeout interrupt	I bit	CPMUINT (RTIE)	7.6 Interrupts	
Vector base+ $EE	TIM timer channel 0	I bit	TIE (C0I)	No	Yes
Vector base + $EC	TIM timer channel 1	I bit	TIE (C1I)	No	Yes
Vector base+ $EA	TIM timer channel 2	I bit	TIE (C2I)	No	Yes
Vector base+ $E8	TIM timer channel 3	I bit	TIE (C3I)	No	Yes
Vector base+ $E6	TIM timer channel 4	I bit	TIE (C4I)	No	Yes
Vector base+ $E4	TIM timer channel 5	I bit	TIE (C5I)	No	Yes
Vector base + $E2	TIM timer channel 6	I bit	TIE (C6I)	No	Yes
Vector base+ $E0	TIM timer channel 7	I bit	TIE (C7I)	No	Yes
Vector base+ $DE	TIM timer overflow	I bit	TSRC2 (TOF)	No	Yes
Vector base+ $DC	TIM Pulse accumulator A overflow	I bit	PACTL (PAOVI)	No	Yes
Vector base + $DA	TIM Pulse accumulator input edge	I bit	PACTL (PAI)	No	Yes
Vector base + $D8	SPI	I bit	SPICR1 (SPIE, SPTIE)	No	Yes
Vector base+ $D6	SCI	I bit	SCICR2 (TIE, TCIE, RIE, ILIE)	Yes	Yes
Vector base + $D4	Reserved				
Vector base + $D2	ATD	I bit	ATDCTL2 (ASCIE)	Yes	Yes
Vector base + $D0	Reserved				
Vector base + $CE	Port J	I bit	PIEJ (PIEJ7-PIEJ6, PIEJ2-PIEJ0)	Yes	Yes
Vector base + $CC to Vector base + $CA	Reserved				
Vector base + $C8	Oscillator status interrupt	I bit	CPMUINT (OSCIE)	No	No
Vector base + $C6	PLL lock interrupt	I bit	CPMUINT (LOCKIE)	No	No
Vector base + $C4 to Vector base + $BC	Reserved				
Vector base + $BA	FLASH error	I bit	FERCNFG (SFDIE, DFDIE)	No	No
Vector base + $B8	FLASH command	I bit	FCNFG (CCIE)	No	Yes
Vector base + $B6	CAN wake-up	I bit	CANRIER (WUPIE)	8.4.7 Interrupts	
Vector base + $B4	CAN errors	I bit	CANRIER (CSCIE, OVRIE)		
Vector base + $B2	CAN receive	I bit	CANRIER (RXFIE)		
Vector base + $B0	CAN transmit	I bit	CANTIER (TXEIE[2:0])		

Table 1-12. Interrupt Vector Locations (Sheet 3 of 3)

Vector Address[1]	Interrupt Source	CCR Mask	Local Enable	Wake up from STOP	Wakeup from WAIT
Vector base + $AE to Vector base + $90	Reserved				
Vector base + $8E	Port P interrupt	I bit	PIEP (PIEP7,PIEP5-PIEP0)	Yes	Yes
Vector base+ $8C	PWM emergency shutdown	I bit	PWMSDN (PWMIE)	No	Yes
Vector base + $8A	Low-voltage interrupt (LVI)	I bit	CPMUCTRL (LVIE)	No	Yes
Vector base + $88	Autonomous periodical interrupt (API)	I bit	CPMUAPICTRL (APIE)	Yes	Yes
Vector base + $86	High temperature interrupt	I bit	CPMUHTCL (HTIE)	No	Yes
Vector base + $84	ATD compare interrupt	I bit	ATDCTL2 (ACMPIE)	Yes	Yes
Vector base + $82	Reserved				
Vector base + $80	Spurious interrupt	—	None	-	-

1. 16 bits vector address based

1.11.3 Effects of Reset

When a reset occurs, MCU registers and control bits are initialized. Refer to the respective block sections for register reset states.

On each reset, the Flash module executes a reset sequence to load Flash configuration registers.

1.11.3.1 Flash Configuration Reset Sequence Phase

On each reset, the Flash module will hold CPU activity while loading Flash module registers from the Flash memory. If double faults are detected in the reset phase, Flash module protection and security may be active on leaving reset. This is explained in more detail in the Flash module section 13.6 Initialization.

1.11.3.2 Reset While Flash Command Active

If a reset occurs while any Flash command is in progress, that command will be immediately aborted. The state of the word being programmed or the sector/block being erased is not guaranteed.

1.11.3.3 I/O Pins

Refer to the PIM section for reset configurations of all peripheral module ports.

1.11.3.4 Memory

The RAM arrays are not initialized out of reset.

1.12 COP Configuration

The COP time-out rate bits CR[2:0] and the WCOP bit in the CPMUCOP register at address 0x003C are loaded from the Flash register FOPT. See Table 1-13 and Table 1-14 for coding. The FOPT register is loaded from the Flash configuration field byte at global address 0x3_FF0E during the reset sequence.

Table 1-13. Initial COP Rate Configuration

NV[2:0] in FOPT Register	CR[2:0] in COPCTL Register
000	111
001	110
010	101
011	100
100	011
101	010
110	001
111	000

Table 1-14. Initial WCOP Configuration

NV[3] in FOPT Register	WCOP in COPCTL Register
1	0
0	1

1.13 ATD External Trigger Input Connection

The ATD module includes external trigger inputs ETRIG0 and ETRIG1. The external trigger allows the user to synchronize ATD conversion to external trigger events. Table 1-15 shows the connection of the external trigger inputs.

Table 1-15. ATD External Trigger Sources

External Trigger Input	Connectivity
ETRIG0	PWM channel 1
ETRIG1	PWM channel 3

Consult the ATD section for information about the analog-to-digital converter module. References to freeze mode are equivalent to active BDM mode.

1.14 S12CPMU Configuration

The bandgap reference voltage V_{BG} and the output voltage of the temperature sensor V_{HT} can be connected to the ATD channel SPECIAL17 (see Table 9-15.) using the VSEL (Voltage Access Select Bit) in CPMUHTCTL register (see Table 7-13.)

Chapter 2 Port Integration Module (S12PPIMV1)

Revision History

Rev. No. (Item No.)	Date (Submitted By)	Sections Affected	Substantial Change(s)
V01.00	19 Mar 2008		Initial version
V01.01	05 May 2008		Corrected mistakes in Port J register and field names
V01.02	12 Jan 2009		Corrected PERxAD register descriptions Replaced VREG_API with API_EXTCLK Minor corrections

2.1 Introduction

2.1.1 Overview

The S12P Family Port Integration Module establishes the interface between the peripheral modules and the I/O pins for all ports. It controls the electrical pin properties as well as the signal prioritization and multiplexing on shared pins.

This section covers:

- Port A and B used as general purpose I/O
- Port E associated with the $\overline{\text{IRQ}}$, $\overline{\text{XIRQ}}$ interrupt inputs
- Port T associated with 1 timer module
- Port S associated with 1 SCI module
- Port M associated with 1 MSCAN and 1 SPI module
- Port P connected to the PWM - inputs can be used as an external interrupt source
- Port J used as general purpose I/O - inputs can be used as an external interrupt source
- Port AD associated with one 10-channel ATD module

Most I/O pins can be configured by register bits to select data direction and drive strength, to enable and select pull-up or pull-down devices.

NOTE

This section assumes the availability of all features (80-pin package option). Some functions are not available on lower pin count package options. Refer to the pin-out summary section.

2.1.2 Features

The Port Integration Module includes these distinctive registers:

- Data registers and data direction registers for Ports A, B, E, T, S, M, P, J and AD when used as general purpose I/O
- Control registers to enable/disable pull devices and select pull-ups/pull-downs on Ports T, S, M, P and J on per-pin basis
- Control registers to enable/disable pull-up devices on Port AD on per-pin basis
- Single control register to enable/disable pull-ups on Ports A, B, and E, on per-port basis and on BKGD pin
- Control registers to enable/disable reduced output drive on Ports T, S, M, P, J and AD on per-pin basis
- Single control register to enable/disable reduced output drive on Ports A, B, and E on per-port basis
- Control registers to enable/disable open-drain (wired-or) mode on Ports S and M
- Interrupt flag register for pin interrupts on Ports P and J
- Control register to configure $\overline{\text{IRQ}}$ pin operation
- Routing register to support module port relocation
- Free-running clock outputs

A standard port pin has the following minimum features:

- Input/output selection
- 5V output drive with two selectable drive strengths
- 5V digital and analog input
- Input with selectable pull-up or pull-down device

Optional features supported on dedicated pins:

- Open drain for wired-or connections
- Interrupt inputs with glitch filtering

2.2 External Signal Description

This section lists and describes the signals that do connect off-chip.

Table 2-1 shows all the pins and their functions that are controlled by the Port Integration Module.

NOTE

If there is more than one function associated with a pin, the priority is indicated by the position in the table from top (highest priority) to bottom (lowest priority).

Table 2-1. Pin Functions and Priorities

Port	Pin Name	Pin Function & Priority[1]	I/O	Description	Pin Function after Reset
-	BKGD	MODC [2]	I	MODC input during $\overline{\text{RESET}}$	BKGD
		BKGD	I/O	S12X_BDM communication pin	
A	PA[7:0]	GPIO	I/O	General purpose	GPIO
B	PB[7:0]	GPIO	I/O	General purpose	GPIO
E	PE[7]	ECLKX2	O	Free-running clock at core clock rate (ECLK x 2)	GPIO
		GPIO	I/O	General purpose	
	PE[6:5]	GPIO	I/O	General purpose	
	PE[4]	ECLK	O	Free-running clock at bus clock rate or programmable down-scaled bus clock	
		GPIO	I/O	General purpose	
	PE[3:2]	GPIO	I/O	General purpose	
	PE[1]	IRQ	I	Maskable level- or falling edge-sensitive interrupt	
		GPI	I	General purpose	
	PE[0]	XIRQ	I	Non-maskable level-sensitive interrupt	
		GPI	I	General purpose	
T	PT[7:6]	IOC[7:6]	I/O	Timer Channels 7 - 6	GPIO
		GPIO	I/O	General purpose	
	PT5	IOC5	I/O	Timer Channel 5	
		(PWM5)	O	Pulse Width Modulator channel 5	
		API_EXTCLK	O	VREG Autonomous Periodical Interrupt Clock	
		GPIO	I/O	General purpose	
	PT4	IOC4	I/O	Timer Channel 4	
		(PWM4)	O	Pulse Width Modulator channel 4	
		GPIO	I/O	General purpose	
	PT[3:1]	IOC[3:1]	I/O	Timer Channels 3 - 1	
		GPIO	I/O	General purpose	
	PT0	IOC0	I/O	Timer Channel 0	
		(PWM0)	O	Pulse Width Modulator channel 0	
		GPIO	I/O	General purpose	
S	PS[3:2]	GPIO	I/O	General purpose	GPIO
	PS1	TXD	O	Serial Communication Interface transmit pin	
		GPIO	I/O	General purpose	
	PS0	RXD	I	Serial Communication Interface receive pin	
		GPIO	I/O	General purpose	

Port	Pin Name	Pin Function & Priority(1)	I/O	Description	Pin Function after Reset
M	PM5	SCK	I/O	Serial Peripheral Interface serial clock pin	GPIO
		GPIO	I/O	General purpose	
	PM4	MOSI	I/O	Serial Peripheral Interface master out/slave in pin	
		GPIO	I/O	General purpose	
	PM3	SS	I/O	Serial Peripheral Interface slave select output in master mode, input in slave mode or master mode.	
		GPIO	I/O	General purpose	
	PM2	MISO	I/O	Serial Peripheral Interface master in/slave out pin	
		GPIO	I/O	General purpose	
	PM1	TXCAN	O	MSCAN transmit pin	
		GPIO	I/O	General purpose	
	PM0	RXCAN	I	MSCAN receive	
		GPIO	I/O	General purpose	
P	PP7	GPIO/KWP7	I/O	General purpose; with interrupt	GPIO
	PP5	PWM5	I/O	Pulse Width Modulator channel 5; emergency shut-down	
		GPIO/KWP5	I/O	General purpose; with interrupt	
	PP[4:0]	PWM[4:0]	O	Pulse Width Modulator channel 4 - 0	
		GPIO/KWP[4:0]	I/O	General purpose; with interrupt	
J	PJ[7:6]	GPIO/KWJ[7:6]	I/O	General purpose; with interrupt	GPIO
	PJ[2:0]	GPIO/KWJ[2:0]	I/O	General purpose; with interrupt	
AD	PAD[9:0]	GPIO	I/O	General purpose	GPIO
		AN[9:0]	I	ATD analog	

1. Signals in brackets denote alternative module routing pins.
2. Function active when $\overline{\text{RESET}}$ asserted.

2.3 Memory Map and Register Definition

This section provides a detailed description of all Port Integration Module registers.

2.3.1 Memory Map

Table 2-2 shows the register map of the Port Integration Module.

Table 2-2. Block Memory Map

Port	Offset or Address	Register	Access	Reset Value	Section/Page
A B	0x0000	PORTA—Port A Data Register	R/W	0x00	2.3.3/2-63
	0x0001	PORTB—Port B Data Register	R/W	0x00	2.3.4/2-63
	0x0002	DDRA—Port A Data Direction Register	R/W	0x00	2.3.5/2-64
	0x0003	DDRB—Port B Data Direction Register	R/W	0x00	2.3.6/2-64

Table 2-2. Block Memory Map (continued)

Port	Offset or Address	Register	Access	Reset Value	Section/Page
	0x0004 : 0x0007	PIM Reserved	R	0x00	2.3.7/2-65
E	0x0008	PORTE—Port E Data Register	R/W(1)	0x00	2.3.8/2-65
	0x0009	DDRE—Port E Data Direction Register	R/W1	0x00	2.3.9/2-66
	0x000A : 0x000B	Non-PIM address range(2)	-	-	-
A B E	0x000C	PUCR—Pull-up Up Control Register	R/W1	0x50	2.3.10/2-67
	0x000D	RDRIV—Reduced Drive Register	R/W1	0x00	2.3.11/2-68
	0x000E : 0x001B	Non-PIM address range2	-	-	-
E	0x001C	ECLKCTL—ECLK Control Register	R/W1	0xC0 / 0x80(3)	2.3.12/2-69
	0x001D	PIM Reserved	R	0x00	2.3.13/2-69
	0x001E	IRQCR—IRQ Control Register	R/W1	0x40	2.3.14/2-70
	0x001F	PIM Reserved	R	0x00	2.3.15/2-70
	0x0020 : 0x023F	Non-PIM address range2	-	-	-
T	0x0240	PTT—Port T Data Register	R/W	0x00	2.3.16/2-71
	0x0241	PTIT—Port T Input Register	R	(4)	2.3.17/2-72
	0x0242	DDRT—Port T Data Direction Register	R/W	0x00	2.3.18/2-73
	0x0243	RDRT—Port T Reduced Drive Register	R/W	0x00	2.3.19/2-74
	0x0244	PERT—Port T Pull Device Enable Register	R/W	0x00	2.3.20/2-74
	0x0245	PPST—Port T Polarity Select Register	R/W	0x00	2.3.21/2-75
	0x0246	PIM Reserved	R	0x00	2.3.22/2-75
	0x0247	Port T Routing Register	R/W	0x00	2.3.23/2-76

Table 2-2. Block Memory Map (continued)

Port	Offset or Address	Register	Access	Reset Value	Section/Page
S	0x0248	PTS—Port S Data Register	R/W	0x00	2.3.24/2-77
	0x0249	PTIS—Port S Input Register	R	[4]	2.3.25/2-77
	0x024A	DDRS—Port S Data Direction Register	R/W	0x00	2.3.26/2-78
	0x024B	RDRS—Port S Reduced Drive Register	R/W	0x00	2.3.27/2-79
	0x024C	PERS—Port S Pull Device Enable Register	R/W	0xFF	2.3.28/2-79
	0x024D	PTPS—Port S Polarity Select Register	R/W	0x00	2.3.29/2-80
	0x024E	WOMS—Port S Wired-Or Mode Register	R/W	0x00	2.3.30/2-80
	0x024F	PIM Reserved	R	0x00	2.3.39/2-86
M	0x0250	PTM—Port M Data Register	R/W	0x00	2.3.32/2-81
	0x0251	PTIM—Port M Input Register	R	[4]	2.3.33/2-82
	0x0252	DDRM—Port M Data Direction Register	R/W	0x00	2.3.34/2-83
	0x0253	RDRM—Port M Reduced Drive Register	R/W	0x00	2.3.35/2-84
	0x0254	PERM—Port M Pull Device Enable Register	R/W	0x00	2.3.36/2-85
	0x0255	PPSM—Port M Polarity Select Register	R/W	0x00	2.3.37/2-85
	0x0256	WOMM—Port M Wired-Or Mode Register	R/W	0x00	2.3.38/2-86
	0x0257	PIM Reserved	R	0x00	2.3.39/2-86
P	0x0258	PTP—Port P Data Register	R/W	0x00	2.3.40/2-87
	0x0259	PTIP—Port P Input Register	R	[4]	2.3.41/2-88
	0x025A	DDRP—Port P Data Direction Register	R/W	0x00	2.3.42/2-88
	0x025B	RDRP—Port P Reduced Drive Register	R/W	0x00	2.3.43/2-89
	0x025C	PERP—Port P Pull Device Enable Register	R/W	0x00	2.3.44/2-90
	0x025D	PTPP—Port P Polarity Select Register	R/W	0x00	2.3.45/2-90
	0x025E	PIEP—Port P Interrupt Enable Register	R/W	0x00	2.3.46/2-91
	0x025F	PIFP—Port P Interrupt Flag Register	R/W	0x00	2.3.47/2-91
	0x0260 : 0x0267	PIM Reserved	R	0x00	2.3.48/2-92

Table 2-2. Block Memory Map (continued)

Port	Offset or Address	Register	Access	Reset Value	Section/Page
J	0x0268	PTJ—Port J Data Register	R/W	0x00	2.3.49/2-92
	0x0269	PTIJ—Port J Input Register	R	[4]	2.3.50/2-93
	0x026A	DDRJ—Port J Data Direction Register	R/W	0x00	2.3.51/2-93
	0x026B	RDRJ—Port J Reduced Drive Register	R/W	0x00	2.3.52/2-94
	0x026C	PERJ—Port J Pull Device Enable Register	R/W	0xFF	2.3.53/2-94
	0x026D	PPSJ—Port J Polarity Select Register	R/W	0x00	2.3.54/2-95
	0x026E	PIEJ—Port J Interrupt Enable Register	R/W	0x00	2.3.55/2-95
	0x026F	PIFJ—Port J Interrupt Flag Register	R/W	0x00	2.3.56/2-96
AD	0x0270	PT0AD—Port AD Data Register	R	0x00	2.3.57/2-96
	0x0271	PT1AD—Port AD Data Register	R/W	0x00	2.3.58/2-97
	0x0272	DDR0AD—Port AD Data Direction Register	R	0x00	2.3.59/2-97
	0x0273	DDR1AD—Port AD Data Direction Register	R/W	0x00	2.3.60/2-98
	0x0274	RDR0AD—Port AD Reduced Drive Register	R	0x00	2.3.61/2-98
	0x0275	RDR1AD—Port AD Reduced Drive Register	R/W	0x00	2.3.62/2-99
	0x0276	PER0AD—Port AD Pull Up Enable Register	R	0x00	2.3.62/2-99
	0x0277	PER1AD—Port AD Pull Up Enable Register	R/W	0x00	2.3.64/2-100
	0x0278 : 0x027F	PIM Reserved	R	0x00	2.3.65/2-100

1. Write access not applicable for one or more register bits. Refer to register description.
2. Refer to device memory map to determine related module.
3. Mode dependent.
4. Read always returns logic level on pins.

Register Name		Bit 7	6	5	4	3	2	1	Bit 0
0x0000 PORTA	R W	PA7	PA6	PA5	PA4	PA3	PA2	PA1	PA0
0x0001 PORTB	R W	PB7	PB6	PB5	PB4	PB3	PB2	PB1	PB0
0x0002 DDRA	R W	DDRA7	DDRA6	DDRA5	DDRA4	DDRA3	DDRA2	DDRA1	DDRA0
0x0003 DDRB	R W	DDRB7	DDRB6	DDRB5	DDRB4	DDRB3	DDRB2	DDRB1	DDRB0
		= Unimplemented or Reserved							

Register Name		Bit 7	6	5	4	3	2	1	Bit 0
0x0004 Reserved	R	0	0	0	0	0	0	0	0
	W								
0x0005 Reserved	R	0	0	0	0	0	0	0	0
	W								
0x0006 Reserved	R	0	0	0	0	0	0	0	0
	W								
0x0007 Reserved	R	0	0	0	0	0	0	0	0
	W								
0x0008 PORTE	R	PE7	PE6	PE5	PE4	PE3	PE2	PE1	PE0
	W								
0x0009 DDRE	R	DDRE7	DDRE6	DDRE5	DDRE4	DDRE3	DDRE2	0	0
	W								
0x000A 0x000B Non-PIM Address Range	R	Non-PIM Address Range							
	W								
0x000C PUCR	R	0	BKPUE	0	PUPEE	0	0	PUPBE	PUPAE
	W								
0x000D RDRIV	R	0	0	0	RDPE	0	0	RDPB	RDPA
	W								
0x000E–0x001B Non-PIM Address Range	R	Non-PIM Address Range							
	W								
0x001C ECLKCTL	R	NECLK	NCLKX2	DIV16	EDIV4	EDIV3	EDIV2	EDIV1	EDIV0
	W								
0x001D Reserved	R	0	0	0	0	0	0	0	0
	W								
0x001E IRQCR	R	IRQE	IRQEN	0	0	0	0	0	0
	W								
0x001F Reserved	R	0	0	0	0	0	0	0	0
	W								

= Unimplemented or Reserved

Register Name		Bit 7	6	5	4	3	2	1	Bit 0
0x0020–0x023F Non-PIM Address Range	R	Non-PIM Address Range							
	W								
0x0240 PTT	R	PTT7	PTT6	PTT5	PTT4	PTT3	PTT2	PTT1	PTT0
	W								
0x0241 PTIT	R	PTIT7	PTIT6	PTIT5	PTIT4	PTIT3	PTIT2	PTIT1	PTIT0
	W								
0x0242 DDRT	R	DDRT7	DDRT6	DDRT5	DDRT4	DDRT3	DDRT2	DDRT1	DDRT0
	W								
0x0243 RDRT	R	RDRT7	RDRT6	RDRT5	RDRT4	RDRT3	RDRT2	RDRT1	RDRT0
	W								
0x0244 PERT	R	PERT7	PERT6	PERT5	PERT4	PERT3	PERT2	PERT1	PERT0
	W								
0x0245 PPST	R	PPST7	PPST6	PPST5	PPST4	PPST3	PPST2	PPST1	PPST0
	W								
0x0246 Reserved	R	0	0	0	0	0	0	0	0
	W								
0x0247 PTTRR	R	0	0	PTTRR5	PTTRR4	0	0	0	PTTRR0
	W								
0x0248 PTS	R	0	0	0	0	PTS3	PTS2	PTS1	PTS0
	W								
0x0249 PTIS	R	0	0	0	0	PTIS3	PTIS2	PTIS1	PTIS0
	W								
0x024A DDRS	R	0	0	0	0	DDRS3	DDRS2	DDRS1	DDRS0
	W								
0x024B RDRS	R	0	0	0	0	RDRS3	RDRS2	RDRS1	RDRS0
	W								
0x024C PERS	R	0	0	0	0	PERS3	PERS2	PERS1	PERS0
	W								
0x024D PPSS	R	0	0	0	0	PPSS3	PPSS2	PPSS1	PPSS0
	W								

= Unimplemented or Reserved

Register Name		Bit 7	6	5	4	3	2	1	Bit 0
0x024E WOMS	R	0	0	0	0	WOMS3	WOMS2	WOMS1	WOMS0
	W								
0x024F Reserved	R	0	0	0	0	0	0	0	0
	W								
0x0250 PTM	R	0	0	PTM5	PTM4	PTM3	PTM2	PTM1	PTM0
	W								
0x0251 PTIM	R	0	0	PTIM5	PTIM4	PTIM3	PTIM2	PTIM1	PTIM0
	W								
0x0252 DDRM	R	0	0	DDRM5	DDRM4	DDRM3	DDRM2	DDRM1	DDRM0
	W								
0x0253 RDRM	R	0	0	RDRM5	RDRM4	RDRM3	RDRM2	RDRM1	RDRM0
	W								
0x0254 PERM	R	0	0	PERM5	PERM4	PERM3	PERM2	PERM1	PERM0
	W								
0x0255 PPSM	R	0	0	PPSM5	PPSM4	PPSM3	PPSM2	PPSM1	PPSM0
	W								
0x0256 WOMM	R	0	0	WOMM5	WOMM4	WOMM3	WOMM2	WOMM1	WOMM0
	W								
0x0257 Reserved	R	0	0	0	0	0	0	0	0
	W								
0x0258 PTP	R	PTP7	0	PTP5	PTP4	PTP3	PTP2	PTP1	PTP0
	W								
0x0259 PTIP	R	PTIP7	0	PTIP5	PTIP4	PTIP3	PTIP2	PTIP1	PTIP0
	W								
0x025A DDRP	R	DDRP7	0	DDRP5	DDRP4	DDRP3	DDRP2	DDRP1	DDRP0
	W								
0x025B RDRP	R	RDRP7	0	RDRP5	RDRP4	RDRP3	RDRP2	RDRP1	RDRP0
	W								
0x025C PERP	R	PERP7	0	PERP5	PERP4	PERP3	PERP2	PERP1	PERP0
	W								
0x025D PPSP	R	PPSP7	0	PPSP5	PPSP4	PPSP3	PPSP2	PPSP1	PPSP0
	W								

= Unimplemented or Reserved

Register Name		Bit 7	6	5	4	3	2	1	Bit 0
0x025E PIEP	R	PIEP7	0	PIEP5	PIEP4	PIEP3	PIEP2	PIEP1	PIEP0
	W								
0x025F PIFP	R	PIFP7	0	PIFP5	PIFP4	PIFP3	PIFP2	PIFP1	PIFP0
	W								
0x0260 Reserved	R	0	0	0	0	0	0	0	0
	W								
0x0261 Reserved	R	0	0	0	0	0	0	0	0
	W								
0x0262 Reserved	R	0	0	0	0	0	0	0	0
	W								
0x0263 Reserved	R	0	0	0	0	0	0	0	0
	W								
0x0264 Reserved	R	0	0	0	0	0	0	0	0
	W								
0x0265 Reserved	R	0	0	0	0	0	0	0	0
	W								
0x0266 Reserved	R	0	0	0	0	0	0	0	0
	W								
0x0267 Reserved	R	0	0	0	0	0	0	0	0
	W								
0x0268 PTJ	R	PTJ7	PTJ6	0	0	0	PTJ2	PTJ1	PTJ0
	W								
0x0269 PTIJ	R	PTIJ7	PTIJ6	0	0	0	PTIJ2	PTIJ1	PTIJ0
	W								
0x026A DDRJ	R	DDRJ7	DDRJ6	0	0	0	DDRJ2	DDRJ1	DDRJ0
	W								
0x026B RDRJ	R	RDRJ7	RDRJ6	0	0	0	RDRJ2	RDRJ1	RDRJ0
	W								
0x026C PERJ	R	PERJ7	PERJ6	0	0	0	PERJ2	PERJ1	PERJ0
	W								

= Unimplemented or Reserved

Register Name		Bit 7	6	5	4	3	2	1	Bit 0
0x026D PPSJ	R	PPSJ7	PPSJ6	0	0	0	PPSJ2	PPSJ1	PPSJ0
	W								
0x026E PIEJ	R	PIEJ7	PIEJ6	0	0	0	PIEJ2	PIEJ1	PIEJ0
	W								
0x026F PIFJ	R	PIFJ7	PIFJ6	0	0	0	PIFJ2	PIFJ1	PIFJ0
	W								
0x0270 PT0AD	R	0	0	0	0	0	0	PT0AD1	PT0AD0
	W								
0x0271 PT1AD	R	PT1AD7	PT1AD6	PT1AD5	PT1AD4	PT1AD3	PT1AD2	PT1AD1	PT1AD0
	W								
0x0272 DDR0AD	R	0	0	0	0	0	0	DDR0AD1	DDR0AD0
	W								
0x0273 DDR1AD	R	DDR1AD7	DDR1AD6	DDR1AD5	DDR1AD4	DDR1AD3	DDR1AD2	DDR1AD1	DDR1AD0
	W								
0x0274 RDR0AD	R	0	0	0	0	0	0	RDR0AD1	RDR0AD0
	W								
0x0275 RDR1AD	R	RDR1AD7	RDR1AD6	RDR1AD5	RDR1AD4	RDR1AD3	RDR1AD2	RDR1AD1	RDR1AD0
	W								
0x0276 PER0AD	R	0	0	0	0	0	0	PER0AD1	PER0AD0
	W								
0x0277 PER1AD	R	PER1AD7	PER1AD6	PER1AD5	PER1AD4	PER1AD3	PER1AD2	PER1AD1	PER1AD0
	W								
0x0278 Reserved	R	0	0	0	0	0	0	0	0
	W								
0x0279 Reserved	R	0	0	0	0	0	0	0	0
	W								
0x027A Reserved	R	0	0	0	0	0	0	0	0
	W								
0x027B Reserved	R	0	0	0	0	0	0	0	0
	W								

= Unimplemented or Reserved

Register Name		Bit 7	6	5	4	3	2	1	Bit 0
0x027C Reserved	R	0	0	0	0	0	0	0	0
	W								
0x027D Reserved	R	0	0	0	0	0	0	0	0
	W								
0x027E Reserved	R	0	0	0	0	0	0	0	0
	W								
0x027F Reserved	R	0	0	0	0	0	0	0	0
	W								

= Unimplemented or Reserved

2.3.2 Register Descriptions

The following table summarizes the effect of the various configuration bits, i.e. data direction (DDR), output level (IO), reduced drive (RDR), pull enable (PE), pull select (PS) on the pin function and pull device activity.

The configuration bit PS is used for two purposes:

1. Configure the sensitive interrupt edge (rising or falling), if interrupt is enabled.
2. Select either a pull-up or pull-down device if PE is active.

Table 2-3. Pin Configuration Summary

DDR	IO	RDR	PE	PS[1]	IE[2]	Function	Pull Device	Interrupt
0	x	x	0	x	0	Input	Disabled	Disabled
0	x	x	1	0	0	Input	Pull Up	Disabled
0	x	x	1	1	0	Input	Pull Down	Disabled
0	x	x	0	0	1	Input	Disabled	Falling edge
0	x	x	0	1	1	Input	Disabled	Rising edge
0	x	x	1	0	1	Input	Pull Up	Falling edge
0	x	x	1	1	1	Input	Pull Down	Rising edge
1	0	0	x	x	0	Output, full drive to 0	Disabled	Disabled
1	1	0	x	x	0	Output, full drive to 1	Disabled	Disabled
1	0	1	x	x	0	Output, reduced drive to 0	Disabled	Disabled
1	1	1	x	x	0	Output, reduced drive to 1	Disabled	Disabled
1	0	0	x	0	1	Output, full drive to 0	Disabled	Falling edge
1	1	0	x	1	1	Output, full drive to 1	Disabled	Rising edge
1	0	1	x	0	1	Output, reduced drive to 0	Disabled	Falling edge
1	1	1	x	1	1	Output, reduced drive to 1	Disabled	Rising edge

1. Always “0” on Port A, B, E, and AD.
2. Applicable only on Port P and J.

NOTE

All register bits in this module are completely synchronous to internal clocks during a register read.

NOTE

Figure of port data registers also display the alternative functions if applicable on the related pin as defined in Table 2-1. Names in brackets denote the availability of the function when using a specific routing option.

NOTE

Figures of module routing registers also display the module instance or module channel associated with the related routing bit.

2.3.3 Port A Data Register (PORTA)

Address 0x0000 Access: User read/write(1)

	7	6	5	4	3	2	1	0
R W	PA7	PA6	PA5	PA4	PA3	PA2	PA1	PA0
Reset	0	0	0	0	0	0	0	0

Figure 2-1. Port A Data Register (PORTA)

1. Read: Anytime. The data source is depending on the data direction value.
   Write: Anytime

Table 2-4. PORTA Register Field Descriptions

Field	Description
7-0 PA	**Port A general purpose input/output data**—Data Register The associated pin can be used as general purpose I/O. In general purpose output mode the register bit value is driven to the pin. If the associated data direction bit is set to 1, a read returns the value of the port register bit, otherwise the buffered pin input state is read.

2.3.4 Port B Data Register (PORTB)

Address 0x0001 Access: User read/write(1)

	7	6	5	4	3	2	1	0
R W	PB7	PB6	PB5	PB4	PB3	PB2	PB1	PB0
Reset	0	0	0	0	0	0	0	0

Figure 2-2. Port B Data Register (PORTB)

1. Read: Anytime. The data source is depending on the data direction value.
   Write: Anytime

Table 2-5. PORTB Register Field Descriptions

Field	Description
7-0 PB	**Port B general purpose input/output data**—Data Register The associated pin can be used as general purpose I/O. In general purpose output mode the register bit value is driven to the pin. If the associated data direction bit is set to 1, a read returns the value of the port register bit, otherwise the buffered pin input state is read.

2.3.5 Port A Data Direction Register (DDRA)

Address 0x0002 Access: User read/write(1)

	7	6	5	4	3	2	1	0
R W	DDRA7	DDRA6	DDRA5	DDRA4	DDRA3	DDRA2	DDRA1	DDRA0
Reset	0	0	0	0	0	0	0	0

Figure 2-3. Port A Data Direction Register (DDRA)

1. Read: Anytime
   Write: Anytime

Table 2-6. DDRA Register Field Descriptions

Field	Description
7-0 DDRA	**Port A Data Direction**— This bit determines whether the associated pin is an input or output. 1 Associated pin is configured as output 0 Associated pin is configured as input

2.3.6 Port B Data Direction Register (DDRB)

Address 0x0003 Access: User read/write(1)

	7	6	5	4	3	2	1	0
R W	DDRB7	DDRB6	DDRB5	DDRB4	DDRB3	DDRB2	DDRB1	DDRB0
Reset	0	0	0	0	0	0	0	0

Figure 2-4. Port B Data Direction Register (DDRB)

1. Read: Anytime
   Write: Anytime

Table 2-7. DDRB Register Field Descriptions

Field	Description
7-0 DDRB	**Port B Data Direction**— This bit determines whether the associated pin is an input or output. 1 Associated pin is configured as output 0 Associated pin is configured as input

2.3.7 PIM Reserved Register

Address 0x0004 to 0x0007 Access: User read(1)

	7	6	5	4	3	2	1	0
R	0	0	0	0	0	0	0	0
W								
Reset	0	0	0	0	0	0	0	0

= Unimplemented or Reserved

Figure 2-5. PIM Reserved Register

1. Read: Always reads 0x00
   Write: Unimplemented

2.3.8 Port E Data Register (PORTE)

Address 0x0008 Access: User read/write(1)

	7	6	5	4	3	2	1	0
R	PE7	PE6	PE5	PE4	PE3	PE2	PE1	PE0
W								
Altern. Function	ECLKX2	—	—	ECLK	—	—	$\overline{IRQ}$	$\overline{XIRQ}$
Reset	0	0	0	0	0	0	—(2)	—2

= Unimplemented or Reserved

Figure 2-6. Port E Data Register (PORTE)

1. Read: Anytime. The data source is depending on the data direction value.
   Write: Anytime
2. These registers are reset to zero. Two bus clock cycles after reset release the register values are updated with the associated pin values.

Table 2-8. PORTE Register Field Descriptions

Field	Description
7 PE	**Port E general purpose input/output data**—Data Register, ECLKX2 output When not used with the alternative function, the associated pin can be used as general purpose I/O. In general purpose output mode the register bit value is driven to the pin. If the associated data direction bit is set to 1, a read returns the value of the port register bit, otherwise the buffered pin input state is read. • The ECLKX2 output function takes precedence over the general purpose I/O function if enabled.
6-5, 3-2 PE	**Port E general purpose input/output data**—Data Register The associated pin can be used as general purpose I/O. In general purpose output mode the register bit value is driven to the pin. If the associated data direction bit is set to 1, a read returns the value of the port register bit, otherwise the buffered pin input state is read.

Table 2-8. PORTE Register Field Descriptions (continued)

Field	Description
4 PE	**Port E general purpose input/output data**—Data Register, ECLK output When not used with the alternative function, the associated pin can be used as general purpose I/O. In general purpose output mode the register bit value is driven to the pin. If the associated data direction bit is set to 1, a read returns the value of the port register bit, otherwise the buffered pin input state is read. • The ECLK output function takes precedence over the general purpose I/O function if enabled.
1 PE	**Port E general purpose input data and interrupt**—Data Register, $\overline{\text{IRQ}}$ input. This pin can be used as general purpose and $\overline{\text{IRQ}}$ input.
0 PE	**Port E general purpose input data and interrupt**—Data Register, $\overline{\text{XIRQ}}$ input. This pin can be used as general purpose and $\overline{\text{XIRQ}}$ input.

2.3.9 Port E Data Direction Register (DDRE)

Address 0x0009 Access: User read/write(1)

	7	6	5	4	3	2	1	0
R	DDRE7	DDRE6	DDRE5	DDRE4	DDRE3	DDRE2	0	0
W								
Reset	0	0	0	0	0	0	0	0

= Unimplemented or Reserved

Figure 2-7. Port E Data Direction Register (DDRE)

1. Read: Anytime
   Write: Anytime

Table 2-9. DDRE Register Field Descriptions

Field	Description
7-2 DDRE	**Port E Data Direction**— This bit determines whether the associated pin is an input or output. 1 Associated pin is configured as output 0 Associated pin is configured as input

2.3.10 Ports A, B, E, BKGD pin Pull-up Control Register (PUCR)

Address 0x000C Access: User read/write(1)

	7	6	5	4	3	2	1	0
R	0	BKPUE	0	PUPEE	0	0	PUPBE	PUPAE
W								
Reset	0	1	0	1	0	0	0	0

= Unimplemented or Reserved

Figure 2-8. Ports ABEK, BKGD pin Pull-up Control Register (PUCR)

1. Read:Anytime in single-chip modes.
   Write:Anytime, except BKPUE which is writable in Special Single-Chip Mode only.

Table 2-10. PUCR Register Field Descriptions

Field	Description
6 BKPUE	**BKGD pin pull-up Enable**—Enable pull-up device on pin This bit configures whether a pull-up device is activated, if the pin is used as input. If a pin is used as output this bit has no effect. 1 Pull-up device enabled 0 Pull-up device disabled
4 PUPEE	**Port E Pull-up Enable**—Enable pull-up devices on all port input pins except pins 5 and 6 This bit configures whether a pull-up device is activated on all associated port input pins. If a pin is used as output this bit has no effect. Pins 5 and 6 have pull-down devices enabled only during reset. This bit has no effect on these pins. 1 Pull-up device enabled 0 Pull-up device disabled
1 PUPBE	**Port B Pull-up Enable**—Enable pull-up devices on all port input pins This bit configures whether a pull-up device is activated on all associated port input pins. If a pin is used as output this bit has no effect. 1 Pull-up device enabled 0 Pull-up device disabled
0 PUPAE	**Port A Pull-up Enable**—Enable pull-up devices on all port input pins This bit configures whether a pull-up device is activated on all associated port input pins. If a pin is used as output this bit has no effect. 1 Pull-up device enabled 0 Pull-up device disabled

2.3.11 Ports A, B, E Reduced Drive Register (RDRIV)

Address 0x000D Access: User read/write(1)

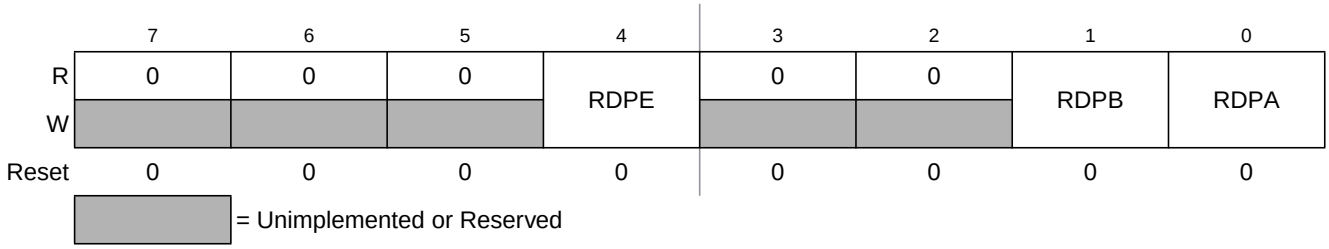

Figure 2-9. Ports ABEK Reduced Drive Register (RDRIV)

1. Read: Anytime
   Write: Anytime

Table 2-11. RDRIV Register Field Descriptions

Field	Description
4 RDPE	**Port E reduced drive**—Select reduced drive for output port This bit configures the drive strength of all associated port output pins as either full or reduced. If a pin is used as input this bit has no effect. The reduced drive function is independent of which function is being used on a particular pin. 1 Reduced drive selected (approx. 1/5 of the full drive strength) 0 Full drive strength enabled
1 RDPE	**Port B reduced drive**—Select reduced drive for output port This bit configures the drive strength of all associated port output pins as either full or reduced. If a pin is used as input this bit has no effect. The reduced drive function is independent of which function is being used on a particular pin. 1 Reduced drive selected (approx. 1/5 of the full drive strength) 0 Full drive strength enabled
0 RDPA	**Port A reduced drive**—Select reduced drive for output port This bit configures the drive strength of all associated port output pins as either full or reduced. If a pin is used as input this bit has no effect. The reduced drive function is independent of which function is being used on a particular pin. 1 Reduced drive selected (approx. 1/5 of the full drive strength) 0 Full drive strength enabled

2.3.12 ECLK Control Register (ECLKCTL)

Address 0x001C Access: User read/write(1)

	7	6	5	4	3	2	1	0
R W	NECLK	NCLKX2	DIV16	EDIV4	EDIV3	EDIV2	EDIV1	EDIV0
Reset:	Mode Depen-dent	1	0	0	0	0	0	0
Special single-chip	0	1	0	0	0	0	0	0
Normal single-chip	1	1	0	0	0	0	0	0

= Unimplemented or Reserved

Figure 2-10. ECLK Control Register (ECLKCTL)

1. Read: Anytime
   Write: Anytime

Table 2-12. ECLKCTL Register Field Descriptions

Field	Description
7 NECLK	**No ECLK**—Disable ECLK output This bit controls the availability of a free-running clock on the ECLK pin. This clock has a fixed rate of equivalent to the internal bus clock. 1 ECLK disabled 0 ECLK enabled
6 NCLKX2	**No ECLKX2**—Disable ECLKX2 output This bit controls the availability of a free-running clock on the ECLKX2 pin. This clock has a fixed rate of twice the internal bus clock. 1 ECLKX2 disabled 0 ECLKX2 enabled
5 DIV16	**Free-running ECLK pre-divider**—Divide by 16 This bit enables a divide-by-16 stage on the selected EDIV rate. 1 Divider enabled: ECLK rate = EDIV rate divided by 16 0 Divider disabled: ECLK rate = EDIV rate
4-0 EDIV	**Free-running ECLK Divider**—Configure ECLK rate These bits determine the rate of the free-running clock on the ECLK pin. 00000 ECLK rate = bus clock rate 00001 ECLK rate = bus clock rate divided by 2 00010 ECLK rate = bus clock rate divided by 3,... 11111 ECLK rate = bus clock rate divided by 32

2.3.13 PIM Reserved Register

Address 0x001D Access: User read(1)

	7	6	5	4	3	2	1	0
R	0	0	0	0	0	0	0	0
W								
Reset	0	0	0	0	0	0	0	0

= Unimplemented or Reserved

Figure 2-11. PIM Reserved Register

1. Read: Always reads 0x00
   Write: Unimplemented

2.3.14 IRQ Control Register (IRQCR)

Address 0x001E Access: User read/write(1)

	7	6	5	4	3	2	1	0
R	IRQE	IRQEN	0	0	0	0	0	0
W								
Reset	0	1	0	0	0	0	0	0

= Unimplemented or Reserved

Figure 2-12. IRQ Control Register (IRQCR)

1. Read: See individual bit descriptions below.
   Write: See individual bit descriptions below.

Table 2-13. IRQCR Register Field Descriptions

Field	Description
7 IRQE	**IRQ select edge sensitive only**— Special mode: Read or write anytime. Normal mode: Read anytime, write once. 1 $\overline{\text{IRQ}}$ pin configured to respond only to falling edges. Falling edges on the $\overline{\text{IRQ}}$ pin will be detected anytime IRQE=1 and will be cleared only upon a reset or the servicing of the $\overline{\text{IRQ}}$ interrupt. 0 $\overline{\text{IRQ}}$ pin configured for low level recognition
6 IRQEN	**IRQ enable**— Read or write anytime. 1 $\overline{\text{IRQ}}$ pin is connected to interrupt logic 0 $\overline{\text{IRQ}}$ pin is disconnected from interrupt logic

2.3.15 PIM Reserved Register

This register is reserved for factory testing of the PIM module and is not available in normal operation. Writing to this register when in special modes can alter the pin functionality.

Address 0x001F Access: User read(1)

	7	6	5	4	3	2	1	0
R	0	0	0	0	0	0	0	0
W								
Reset	0	0	0	0	0	0	0	0

= Unimplemented or Reserved

Figure 2-13. PIM Reserved Register

1. Read: Always reads 0x00
   Write: Unimplemented

2.3.16 Port T Data Register (PTT)

Address 0x0240 Access: User read/write(1)

	7	6	5	4	3	2	1	0
R W	PTT7	PTT6	PTT5	PTT4	PTT3	PTT2	PTT1	PTT0
Altern. Function	IOC7	IOC6	IOC5	IOC4	IOC3	IOC2	IOC1	IOC0
	—	—	(PWM5)	(PWM4)	—	—	—	(PWM0)
	—	—	API_EXTCLK	—	—	—	—	—
Reset	0	0	0	0	0	0	0	0

Figure 2-14. Port T Data Register (PTT)

1. Read: Anytime. The data source is depending on the data direction value.
   Write: Anytime

Table 2-14. PTT Register Field Descriptions

Field	Description
7-6, 3-1 PTT	**Port T general purpose input/output data**—Data Register, TIM output When not used with the alternative function, the associated pin can be used as general purpose I/O. In general purpose output mode the register bit value is driven to the pin. If the associated data direction bit is set to 1, a read returns the value of the port register bit, otherwise the buffered pin input state is read. • The TIM output function takes precedence over the general purpose I/O function if the related channel is enabled.
5 PTT	**Port T general purpose input/output data**—Data Register, TIM output, routed PWM output, API_EXTCLK output When not used with the alternative function, the associated pin can be used as general purpose I/O. In general purpose output mode the register bit value is driven to the pin. If the associated data direction bit is set to 1, a read returns the value of the port register bit, otherwise the buffered pin input state is read. • The TIM output function takes precedence over the routed PWM, API_EXTCLK function and the general purpose I/O function if the related channel is enabled. • The routed PWM function takes precedence over API_EXTCLK and the general purpose I/O function if the related channel is enabled. • The API_EXTCLK takes precedence over the general purpose I/O function if enabled.
4,0 PTT	**Port T general purpose input/output data**—Data Register, TIM output, routed PWM output When not used with the alternative function, the associated pin can be used as general purpose I/O. In general purpose output mode the register bit value is driven to the pin. If the associated data direction bit is set to 1, a read returns the value of the port register bit, otherwise the buffered pin input state is read. • The TIM output function takes precedence over the routed PWM and the general purpose I/O function if the related channel is enabled. • The routed PWM function takes precedence over the general purpose I/O function if the related channel is enabled.

2.3.17 Port T Input Register (PTIT)

Address 0x0241 Access: User read(1)

	7	6	5	4	3	2	1	0
R	PTIT7	PTIT6	PTIT5	PTIT4	PTIT3	PTIT2	PTIT1	PTIT0
W								
Reset	u	u	u	u	u	u	u	u

= Unimplemented or Reserved u = Unaffected by reset

Figure 2-15. Port T Input Register (PTIT)

1. Read: Anytime
   Write:Never, writes to this register have no effect.

Table 2-15. PTIT Register Field Descriptions

Field	Description
7-0 PTIT	**Port T input data**— A read always returns the buffered input state of the associated pin. It can be used to detect overload or short circuit conditions on output pins.

2.3.18 Port T Data Direction Register (DDRT)

Address 0x0242 Access: User read/write(1)

	7	6	5	4	3	2	1	0
R W	DDRT7	DDRT6	DDRT5	DDRT4	DDRT3	DDRT2	DDRT1	DDRT0
Reset	0	0	0	0	0	0	0	0

Figure 2-16. Port T Data Direction Register (DDRT)

1. Read: Anytime
   Write: Anytime

Table 2-16. DDRT Register Field Descriptions

Field	Description
7-6, 3-1 DDRT	**Port T data direction**— This bit determines whether the pin is an input or output. The TIM forces the I/O state to be an output for a timer port associated with an enabled output compare. In this case the data direction bit will not change. 1 Associated pin is configured as output 0 Associated pin is configured as input
5 DDRT	**Port T data direction**— This bit determines whether the pin is an input or output. The TIM forces the I/O state to be an output for a timer port associated with an enabled output compare. Else the routed PWM forces the I/O state to be an output for an enabled channel. Else the API_EXTCLK forces the I/O state to be an output if enabled. In these cases the data direction bit will not change. 1 Associated pin is configured as output 0 Associated pin is configured as input
4,0 DDRT	**Port T data direction**— This bit determines whether the pin is an input or output. The TIM forces the I/O state to be an output for a timer port associated with an enabled output compare. Else the routed PWM forces the I/O state to be an output for an enabled channel. In these cases the data direction bit will not change. 1 Associated pin is configured as output 0 Associated pin is configured as input

2.3.19 Port T Reduced Drive Register (RDRT)

Address 0x0243 Access: User read/write(1)

	7	6	5	4	3	2	1	0
R W	RDRT7	RDRT6	RDRT5	RDRT4	RDRT3	RDRT2	RDRT1	RDRT0
Reset	0	0	0	0	0	0	0	0

Figure 2-17. Port T Reduced Drive Register (RDRT)

1. Read: Anytime
   Write: Anytime

Table 2-17. RDRT Register Field Descriptions

Field	Description
7-0 RDRT	**Port T reduced drive**—Select reduced drive for output pin This bit configures the drive strength of the associated output pin as either full or reduced. If a pin is used as input this bit has no effect. The reduced drive function is independent of which function is being used on a particular pin. 1 Reduced drive selected (approx. 1/5 of the full drive strength) 0 Full drive strength enabled

2.3.20 Port T Pull Device Enable Register (PERT)

Address 0x0244 Access: User read/write(1)

	7	6	5	4	3	2	1	0
R W	PERT7	PERT6	PERT5	PERT4	PERT3	PERT2	PERT1	PERT0
Reset	0	0	0	0	0	0	0	0

Figure 2-18. Port T Pull Device Enable Register (PERT)

1. Read: Anytime
   Write: Anytime

Table 2-18. PERT Register Field Descriptions

Field	Description
7-0 PERT	**Port T pull device enable**—Enable pull device on input pin This bit controls whether a pull device on the associated port input pin is active. If a pin is used as output this bit has no effect. The polarity is selected by the related polarity select register bit. 1 Pull device enabled 0 Pull device disabled

2.3.21 Port T Polarity Select Register (PPST)

Address 0x0245 Access: User read/write(1)

	7	6	5	4	3	2	1	0
R W	PPST7	PPST6	PPST5	PPST4	PPST3	PPST2	PPST1	PPST0
Reset	0	0	0	0	0	0	0	0

Figure 2-19. Port T Polarity Select Register (PPST)

1. Read: Anytime
   Write: Anytime

Table 2-19. PPST Register Field Descriptions

Field	Description
7-0 PPST	**Port T pull device select**—Configure pull device polarity on input pin This bit selects a pull-up or a pull-down device if enabled on the associated port input pin. 1 A pull-down device is selected 0 A pull-up device is selected

2.3.22 PIM Reserved Register

Address 0x0246 Access: User read(1)

	7	6	5	4	3	2	1	0
R	0	0	0	0	0	0	0	0
W								
Reset	0	0	0	0	0	0	0	0

= Unimplemented or Reserved

Figure 2-20. PIM Reserved Register

1. Read: Always reads 0x00
   Write: Unimplemented

2.3.23 Port T Routing Register (PTTRR)

Address 0x0247 Access: User read(1)

	7	6	5	4	3	2	1	0
R	0	0	PTTRR5	PTTRR4	0	0	0	PTTRR0
W								
Routing Option	—	—	PWM5	PWM4	—	—	—	PWM0
Reset	0	0	0	0	0	0	0	0

= Unimplemented or Reserved

Figure 2-21. Port T Routing Register (PTTRR)

1. Read: Anytime
   Write: Anytime

This register configures the re-routing of PWM channels on alternative pins on Port T.

Table 2-20. Port T Routing Register Field Descriptions

Field	Description
5 PTTRR	**Port T data direction**— This register controls the routing of PWM channel 5. 1 PWM5 routed to PT5 0 PWM5 routed to PP5
4 PTTRR	**Port T data direction**— This register controls the routing of PWM channel 4. 1 PWM4 routed to PT4 0 PWM4 routed to PP4
0 PTTRR	**Port T data direction**— This register controls the routing of PWM channel 0. 1 PWM0 routed to PT0 0 PWM0 routed to PP0

2.3.24 Port S Data Register (PTS)

Address 0x0248 Access: User read/write(1)

	7	6	5	4	3	2	1	0
R	0	0	0	0	PTS3	PTS2	PTS1	PTS0
W								
Altern. Function	—	—	—	—	—	—	TXD	RXD
Reset	0	0	0	0	0	0	0	0

Figure 2-22. Port S Data Register (PTS)

1. Read: Anytime The data source is depending on the data direction value.
   Write: Anytime

Table 2-21. PTS Register Field Descriptions

Field	Description
3-2 PTS	**Port S general purpose input/output data**—Data Register When not used with the alternative function, the associated pin can be used as general purpose I/O. In general purpose output mode the register bit value is driven to the pin. If the associated data direction bit is set to 1, a read returns the value of the port register bit, otherwise the buffered pin input state is read.
1 PTS	**Port S general purpose input/output data**—Data Register, SCI TXD output When not used with the alternative function, the associated pin can be used as general purpose I/O. In general purpose output mode the register bit value is driven to the pin. If the associated data direction bit is set to 1, a read returns the value of the port register bit, otherwise the buffered pin input state is read. • The SCI function takes precedence over the general purpose I/O function if enabled.
0 PTS	**Port S general purpose input/output data**—Data Register, SCI RXD input When not used with the alternative function, the associated pin can be used as general purpose I/O. In general purpose output mode the register bit value is driven to the pin. If the associated data direction bit is set to 1, a read returns the value of the port register bit, otherwise the buffered pin input state is read. • The SCI function takes precedence over the general purpose I/O function if enabled.

2.3.25 Port S Input Register (PTIS)

Address 0x0249 Access: User read(1)

	7	6	5	4	3	2	1	0
R	0	0	0	0	PTIS3	PTIS2	PTIS1	PTIS0
W								
Reset	u	u	u	u	u	u	u	u

= Unimplemented or Reserved u = Unaffected by reset

Figure 2-23. Port S Input Register (PTIS)

1. Read: Anytime
   Write:Never, writes to this register have no effect.

Table 2-22. PTIS Register Field Descriptions

Field	Description
3-0 PTIS	**Port S input data**— A read always returns the buffered input state of the associated pin. It can be used to detect overload or short circuit conditions on output pins.

2.3.26 Port S Data Direction Register (DDRS)

Address 0x024A Access: User read/write(1)

	7	6	5	4	3	2	1	0
R	0	0	0	0	DDRS3	DDRS2	DDRS1	DDRS0
W								
Reset	0	0	0	0	0	0	0	0

Figure 2-24. Port S Data Direction Register (DDRS)

1. Read: Anytime
   Write: Anytime

Table 2-23. DDRS Register Field Descriptions

Field	Description
3-2 DDRS	**Port S data direction**— This bit determines whether the associated pin is an input or output. 1 Associated pin is configured as output 0 Associated pin is configured as input
1 DDRS	**Port S data direction**— This bit determines whether the associated pin is an input or output. Depending on the configuration of the enabled SCI the I/O state will be forced to be input or output. In this case the data direction bit will not change. 1 Associated pin is configured as output 0 Associated pin is configured as input
0 DDRS	**Port S data direction**— This bit determines whether the associated pin is an input or output. Depending on the configuration of the enabled SCI the I/O state will be forced to be input or output. In this case the data direction bit will not change. 1 Associated pin is configured as output 0 Associated pin is configured as input

2.3.27 Port S Reduced Drive Register (RDRS)

Address 0x024B Access: User read/write(1)

	7	6	5	4	3	2	1	0
R	0	0	0	0	RDRS3	RDRS2	RDRS1	RDRS0
W								
Reset	0	0	0	0	0	0	0	0

Figure 2-25. Port S Reduced Drive Register (RDRS)

1. Read: Anytime
   Write: Anytime

Table 2-24. RDRS Register Field Descriptions

Field	Description
3-0 RDRS	**Port S reduced drive**—Select reduced drive for output pin This bit configures the drive strength of the associated output pin as either full or reduced. If a pin is used as input this bit has no effect. The reduced drive function is independent of which function is being used on a particular pin. 1 Reduced drive selected (approx. 1/5 of the full drive strength) 0 Full drive strength enabled

2.3.28 Port S Pull Device Enable Register (PERS)

Address 0x024C Access: User read/write(1)

	7	6	5	4	3	2	1	0
R	0	0	0	0	PERS3	PERS2	PERS1	PERS0
W								
Reset	0	0	0	0	1	1	1	1

Figure 2-26. Port S Pull Device Enable Register (PERS)

1. Read: Anytime
   Write: Anytime

Table 2-25. PERS Register Field Descriptions

Field	Description
3-0 PERS	**Port S pull device enable**—Enable pull device on input pin or wired-or output pin This bit controls whether a pull device on the associated port input pin is active. If a pin is used as output this bit has only effect if used in wired-or mode. The polarity is selected by the related polarity select register bit. 1 Pull device enabled 0 Pull device disabled

2.3.29 Port S Polarity Select Register (PPSS)

Address 0x024D Access: User read/write(1)

	7	6	5	4	3	2	1	0
R	0	0	0	0	PPSS3	PPSS2	PPSS1	PPSS0
W								
Reset	0	0	0	0	0	0	0	0

Figure 2-27. Port S Polarity Select Register (PPSS)

1. Read: Anytime
   Write: Anytime

Table 2-26. PPSS Register Field Descriptions

Field	Description
3-0 PPSS	**Port S pull device select**—Configure pull device polarity on input pin This bit selects a pull-up or a pull-down device if enabled on the associated port input pin. 1 A pull-down device is selected 0 A pull-up device is selected

2.3.30 Port S Wired-Or Mode Register (WOMS)

Address 0x024E Access: User read/write(1)

	7	6	5	4	3	2	1	0
R	0	0	0	0	WOMS3	WOMS2	WOMS1	WOMS0
W								
Reset	0	0	0	0	0	0	0	0

Figure 2-28. Port S Wired-Or Mode Register (WOMS)

1. Read: Anytime
   Write: Anytime

Table 2-27. WOMS Register Field Descriptions

Field	Description
3-0 WOMS	**Port S wired-or mode**—Enable open-drain functionality on output pin This bit configures an output pin as wired-or (open-drain) or push-pull. In wired-or mode a logic “0” is driven active low while a logic “1” remains undriven. This allows a multipoint connection of several serial modules. The bit has no influence on pins used as input. 1 Output buffer operates as open-drain output. 0 Output buffer operates as push-pull output.

2.3.31 PIM Reserved Register

Address 0x024F Access: User read(1)

	7	6	5	4	3	2	1	0
R	0	0	0	0	0	0	0	0
W								
Reset	0	0	0	0	0	0	0	0

= Unimplemented or Reserved u = Unaffected by reset

Figure 2-29. PIM Reserved Register

1. Read: Always reads 0x00
   Write: Unimplemented

2.3.32 Port M Data Register (PTM)

Address 0x0250 Access: User read/write(1)

	7	6	5	4	3	2	1	0
R	0	0	PTM5	PTM4	PTM3	PTM2	PTM1	PTM0
W								
Altern. Function	—	—	SCK	MOSI	$\overline{SS}$	MISO	TXCAN	RXCAN
Reset	0	0	0	0	0	0	0	0

Figure 2-30. Port M Data Register (PTM)

1. Read: Anytime. The data source is depending on the data direction value.
   Write: Anytime

Table 2-28. PTM Register Field Descriptions

Field	Description
5 PTM	**Port M general purpose input/output data**—Data Register, SPI SCK input/output When not used with the alternative function, the associated pin can be used as general purpose I/O. In general purpose output mode the register bit value is driven to the pin. If the associated data direction bit is set to 1, a read returns the value of the port register bit, otherwise the buffered pin input state is read. • The SPI function takes precedence over the general purpose I/O function if enabled.
4 PTM	**Port M general purpose input/output data**—Data Register, SPI MOSI input/output When not used with the alternative function, the associated pin can be used as general purpose I/O. In general purpose output mode the register bit value is driven to the pin. If the associated data direction bit is set to 1, a read returns the value of the port register bit, otherwise the buffered pin input state is read. • The SPI function takes precedence over the general purpose I/O function if enabled.

Table 2-28. PTM Register Field Descriptions (continued)

Field	Description
3 PTM	**Port M general purpose input/output data**—Data Register, SPI $\overline{SS}$ input/output When not used with the alternative function, the associated pin can be used as general purpose I/O. In general purpose output mode the register bit value is driven to the pin. If the associated data direction bit is set to 1, a read returns the value of the port register bit, otherwise the buffered pin input state is read. • The SPI function takes precedence over the general purpose I/O function if enabled.
2 PTM	**Port M general purpose input/output data**—Data Register, SPI MISO input/output When not used with the alternative function, the associated pin can be used as general purpose I/O. In general purpose output mode the register bit value is driven to the pin. If the associated data direction bit is set to 1, a read returns the value of the port register bit, otherwise the buffered pin input state is read. • The SPI function takes precedence over the general purpose I/O function if enabled.
1 PTM	**Port M general purpose input/output data**—Data Register, CAN TXCAN output When not used with the alternative function, the associated pin can be used as general purpose I/O. In general purpose output mode the register bit value is driven to the pin. If the associated data direction bit is set to 1, a read returns the value of the port register bit, otherwise the buffered pin input state is read. • The CAN function takes precedence over the general purpose I/O function if enabled.
0 PTM	**Port M general purpose input/output data**—Data Register, CAN RXCAN input When not used with the alternative function, the associated pin can be used as general purpose I/O. In general purpose output mode the register bit value is driven to the pin. If the associated data direction bit is set to 1, a read returns the value of the port register bit, otherwise the buffered pin input state is read. • The CAN function takes precedence over the general purpose I/O function if enabled.

2.3.33 Port M Input Register (PTIM)

Address 0x0251 Access: User read(1)

	7	6	5	4	3	2	1	0
R	0	0	PTIM5	PTIM4	PTIM3	PTIM2	PTIM1	PTIM0
W								
Reset	u	u	u	u	u	u	u	u

= Unimplemented or Reserved u = Unaffected by reset

Figure 2-31. Port M Input Register (PTIM)

1. Read: Anytime
   Write:Never, writes to this register have no effect.

Table 2-29. PTIM Register Field Descriptions

Field	Description
5-0 PTIM	**Port M input data**— A read always returns the buffered input state of the associated pin. It can be used to detect overload or short circuit conditions on output pins.

2.3.34 Port M Data Direction Register (DDRM)

Address 0x0252 Access: User read/write(1)

	7	6	5	4	3	2	1	0
R	0	0	DDRM5	DDRM4	DDRM3	DDRM2	DDRM1	DDRM0
W								
Reset	0	0	0	0	0	0	0	0

Figure 2-32. Port M Data Direction Register (DDRM)

1. Read: Anytime
   Write: Anytime

Table 2-30. DDRM Register Field Descriptions

Field	Description
5 DDRM	**Port M data direction**— This bit determines whether the associated pin is an input or output. Depending on the configuration of the enabled SPI the I/O state will be forced to be input or output. In this case the data direction bit will not change. 1 Associated pin is configured as output 0 Associated pin is configured as input
4 DDRM	**Port M data direction**— This bit determines whether the associated pin is an input or output. Depending on the configuration of the enabled SPI the I/O state will be forced to be input or output. In this case the data direction bit will not change. 1 Associated pin is configured as output 0 Associated pin is configured as input
3 DDRM	**Port M data direction**— This bit determines whether the associated pin is an input or output. Depending on the configuration of the enabled SPI the I/O state will be forced to be input or output. In this case the data direction bit will not change. 1 Associated pin is configured as output 0 Associated pin is configured as input

Table 2-30. DDRM Register Field Descriptions (continued)

Field	Description
2 DDRM	**Port M data direction**— This bit determines whether the associated pin is an input or output. Depending on the configuration of the enabled SPI the I/O state will be forced to be input or output. In this case the data direction bit will not change. 1 Associated pin is configured as output 0 Associated pin is configured as input
1 DDRM	**Port M data direction**— This bit determines whether the associated pin is an input or output. The enabled CAN forces the I/O state to be an output. In this case the data direction bit will not change. 1 Associated pin is configured as output 0 Associated pin is configured as input
0 DDRM	**Port M data direction**— This bit determines whether the associated pin is an input or output. The enabled CAN forces the I/O state to be an input. In this case the data direction bit will not change. 1 Associated pin is configured as output 0 Associated pin is configured as input

2.3.35 Port M Reduced Drive Register (RDRM)

Address 0x0253 Access: User read/write(1)

	7	6	5	4	3	2	1	0
R	0	0	RDRM5	RDRM4	RDRM3	RDRM2	RDRM1	RDRM0
W								
Reset	0	0	0	0	0	0	0	0

Figure 2-33. Port M Reduced Drive Register (RDRM)

1. Read: Anytime
   Write: Anytime

Table 2-31. RDRM Register Field Descriptions

Field	Description
5-0 RDRM	**Port M reduced drive**—Select reduced drive for output pin This bit configures the drive strength of the associated output pin as either full or reduced. If a pin is used as input this bit has no effect. The reduced drive function is independent of which function is being used on a particular pin. 1 Reduced drive selected (approx. 1/5 of the full drive strength) 0 Full drive strength enabled

2.3.36 Port M Pull Device Enable Register (PERM)

Address 0x0254 Access: User read/write(1)

	7	6	5	4	3	2	1	0
R	0	0	PERM5	PERM4	PERM3	PERM2	PERM1	PERM0
W								
Reset	0	0	0	0	0	0	0	0

Figure 2-34. Port M Pull Device Enable Register (PERM)

1. Read: Anytime
   Write: Anytime

Table 2-32. PERM Register Field Descriptions

Field	Description
5-0 PERM	**Port M pull device enable**—Enable pull device on input pin or wired-or output pin This bit controls whether a pull device on the associated port input pin is active. If a pin is used as output this bit has only effect if used in wired-or mode. The polarity is selected by the related polarity select register bit. 1 Pull device enabled 0 Pull device disabled

2.3.37 Port M Polarity Select Register (PPSM)

Address 0x0255 Access: User read/write(1)

	7	6	5	4	3	2	1	0
R	0	0	PPSM5	PPSM4	PPSM3	PPSM2	PPSM1	PPSM0
W								
Reset	0	0	0	0	0	0	0	0

Figure 2-35. Port M Polarity Select Register (PPSM)

1. Read: Anytime
   Write: Anytime

Table 2-33. PPSM Register Field Descriptions

Field	Description
5-0 PPSM	**Port M pull device select**—Configure pull device polarity on input pin This bit selects a pull-up or a pull-down device if enabled on the associated port input pin. If CAN is active the selection of a pull-down device on the RXCAN input will have no effect. 1 A pull-down device is selected 0 A pull-up device is selected

2.3.38 Port M Wired-Or Mode Register (WOMM)

Address 0x0256 Access: User read/write(1)

	7	6	5	4	3	2	1	0
R	0	0	WOMM5	WOMM4	WOMM3	WOMM2	WOMM1	WOMM0
W								
Reset	0	0	0	0	0	0	0	0

Figure 2-36. Port M Wired-Or Mode Register (WOMM)

1. Read: Anytime
   Write: Anytime

Table 2-34. WOMM Register Field Descriptions

Field	Description
5-0 WOMM	**Port M wired-or mode**—Enable open-drain functionality on output pin This bit configures an output pin as wired-or (open-drain) or push-pull. In wired-or mode a logic “0” is driven active low while a logic “1” remains undriven. This allows a multipoint connection of several serial modules. The bit has no influence on pins used as input. 1 Output buffer operates as open-drain output. 0 Output buffer operates as push-pull output.

2.3.39 PIM Reserved Register

Address 0x0257 Access: User read(1)

	7	6	5	4	3	2	1	0
R	0	0	0	0	0	0	0	0
W								
Reset	0	0	0	0	0	0	0	0

= Unimplemented or Reserved u = Unaffected by reset

Figure 2-37. PIM Reserved Register

1. Read: Always reads 0x00
   Write: Unimplemented

2.3.40 Port P Data Register (PTP)

Address 0x0258 Access: User read/write(1)

	7	6	5	4	3	2	1	0
R	PTP7	0	PTP5	PTP4	PTP3	PTP2	PTP1	PTP0
W								
Altern. Function	—	—	PWM5	PWM4	PWM3	PWM2	PWM1	PWM0
Reset	0	0	0	0	0	0	0	0

Figure 2-38. Port P Data Register (PTP)

1. Read: Anytime. The data source is depending on the data direction value.
   Write: Anytime

Table 2-35. PTP Register Field Descriptions

Field	Description
7 PTP	**Port P general purpose input/output data**—Data Register, pin interrupt input/output The associated pin can be used as general purpose I/O. In general purpose output mode the register bit value is driven to the pin. If the associated data direction bit is set to 1, a read returns the value of the port register bit, otherwise the buffered pin input state is read. • Pin interrupts can be generated if enabled in input or output mode.
5 PTP	**Port P general purpose input/output data**—Data Register, PWM input/output, pin interrupt input/output When not used with the alternative function, the associated pin can be used as general purpose I/O. In general purpose output mode the register bit value is driven to the pin. If the associated data direction bit is set to 1, a read returns the value of the port register bit, otherwise the buffered pin input state is read. • The PWM function takes precedence over the general purpose I/O function if the related channel or the emergency shut-down feature is enabled. • Pin interrupts can be generated if enabled in input or output mode.
4-0 PTP	**Port P general purpose input/output data**—Data Register, PWM output, pin interrupt input/output When not used with the alternative function, the associated pin can be used as general purpose I/O. In general purpose output mode the register bit value is driven to the pin. If the associated data direction bit is set to 1, a read returns the value of the port register bit, otherwise the buffered pin input state is read. • The PWM function takes precedence over the general purpose I/O function if the related channel is enabled. • Pin interrupts can be generated if enabled in input or output mode.

2.3.41 Port P Input Register (PTIP)

Address 0x0259 Access: User read(1)

	7	6	5	4	3	2	1	0
R	PTIP7	0	PTIP5	PTIP4	PTIP3	PTIP2	PTIP1	PTIP0
W								
Reset	u	u	u	u	u	u	u	u

= Unimplemented or Reserved u = Unaffected by reset

Figure 2-39. Port P Input Register (PTIP)

1. Read: Anytime
   Write:Never, writes to this register have no effect.

Table 2-36. PTIP Register Field Descriptions

Field	Description
7,5-0 PTIP	**Port P input data**— A read always returns the buffered input state of the associated pin. It can be used to detect overload or short circuit conditions on output pins.

2.3.42 Port P Data Direction Register (DDRP)

Address 0x025A Access: User read/write(1)

	7	6	5	4	3	2	1	0
R	DDRP7	0	DDRP5	DDRP4	DDRP3	DDRP2	DDRP1	DDRP0
W								
Reset	0	0	0	0	0	0	0	0

Figure 2-40. Port P Data Direction Register (DDRP)

1. Read: Anytime
   Write: Anytime

Table 2-37. DDRP Register Field Descriptions

Field	Description
7 DDRP	**Port P data direction**— This bit determines whether the associated pin is an input or output. 1 Associated pin is configured as output 0 Associated pin is configured as input

Table 2-37. DDRP Register Field Descriptions (continued)

Field	Description
5 DDRP	**Port P data direction**— This bit determines whether the associated pin is an input or output. The PWM forces the I/O state to be an output for an enabled channel. If the emergency shut-down feature is enabled this pin is an input. In this case the data direction bit will not change. 1 Associated pin is configured as output 0 Associated pin is configured as input
4-0 DDRP	**Port P data direction**— This bit determines whether the associated pin is an input or output. The PWM forces the I/O state to be an output for an enabled channel. In this case the data direction bit will not change. 1 Associated pin is configured as output 0 Associated pin is configured as input

2.3.43 Port P Reduced Drive Register (RDRP)

Address 0x025B — Access: User read/write(1)

	7	6	5	4	3	2	1	0
R	RDRP7	0	RDRP5	RDRP4	RDRP3	RDRP2	RDRP1	RDRP0
W								
Reset	0	0	0	0	0	0	0	0

Figure 2-41. Port P Reduced Drive Register (RDRP)

1. Read: Anytime
   Write: Anytime

Table 2-38. RDRP Register Field Descriptions

Field	Description
7,5-0 RDRP	**Port P reduced drive**—Select reduced drive for output pin This bit configures the drive strength of the associated output pin as either full or reduced. If a pin is used as input this bit has no effect. The reduced drive function is independent of which function is being used on a particular pin. 1 Reduced drive selected (approx. 1/5 of the full drive strength) 0 Full drive strength enabled

2.3.44 Port P Pull Device Enable Register (PERP)

Address 0x025C Access: User read/write(1)

	7	6	5	4	3	2	1	0
R	PERP7	0	PERP5	PERP4	PERP3	PERP2	PERP1	PERP0
W								
Reset	0	0	0	0	0	0	0	0

Figure 2-42. Port P Pull Device Enable Register (PERP)

1. Read: Anytime
   Write: Anytime

Table 2-39. PERP Register Field Descriptions

Field	Description
7,5-0 PERP	**Port P pull device enable**—Enable pull device on input pin This bit controls whether a pull device on the associated port input pin is active. If a pin is used as output this bit has no effect. The polarity is selected by the related polarity select register bit. 1 Pull device enabled 0 Pull device disabled

2.3.45 Port P Polarity Select Register (PPSP)

Address 0x025D Access: User read/write(1)

	7	6	5	4	3	2	1	0
R	PPSP7	0	PPSP5	PPSP4	PPSP3	PPSP2	PPSP1	PPSP0
W								
Reset	0	0	0	0	0	0	0	0

Figure 2-43. Port P Polarity Select Register (PPSP)

1. Read: Anytime
   Write: Anytime

Table 2-40. PPSP Register Field Descriptions

Field	Description
7,5-0 PPSP	**Port P pull device select**—Configure pull device and pin interrupt edge polarity on input pin This bit selects a pull-up or a pull-down device if enabled on the associated port input pin. This bit also selects the polarity of the active pin interrupt edge. 1 A pull-down device is selected; rising edge selected 0 A pull-up device is selected; falling edge selected

2.3.46 Port P Interrupt Enable Register (PIEP)

Address 0x025E — Access: User read/write(1)

	7	6	5	4	3	2	1	0
R	PIEP7	0	PIEP5	PIEP4	PIEP3	PIEP2	PIEP1	PIEP0
W								
Reset	0	0	0	0	0	0	0	0

Figure 2-44. Port P Interrupt Enable Register (PIEP)

1. Read: Anytime
   Write: Anytime

Table 2-41. PIEP Register Field Descriptions

Field	Description
7,5-0 PIEP	**Port P interrupt enable**— This bit enables or disables on the edge sensitive pin interrupt on the associated pin. 1 Interrupt is enabled 0 Interrupt is disabled (interrupt flag masked)

2.3.47 Port P Interrupt Flag Register (PIFP)

Address 0x025F — Access: User read/write(1)

	7	6	5	4	3	2	1	0
R	PIFP7	0	PIFP5	PIFP4	PIFP3	PIFP2	PIFP1	PIFP0
W								
Reset	0	0	0	0	0	0	0	0

Figure 2-45. Port P Interrupt Flag Register (PIFP)

1. Read: Anytime
   Write: Anytime

Table 2-42. PIFP Register Field Descriptions

Field	Description
7,5-0 PIFP	**Port P interrupt flag**— The flag bit is set after an active edge was applied to the associated input pin. This can be a rising or a falling edge based on the state of the polarity select register. Writing a logic “1” to the corresponding bit field clears the flag. 1 Active edge on the associated bit has occurred (an interrupt will occur if the associated enable bit is set) 0 No active edge occurred

2.3.48 PIM Reserved Registers

Address 0x0260-0x267 Access: User read(1)

	7	6	5	4	3	2	1	0
R	0	0	0	0	0	0	0	0
W								
Reset	0	0	0	0	0	0	0	0

= Unimplemented or Reserved u = Unaffected by reset

Figure 2-46. PIM Reserved Registers

1. Read: Always reads 0x00
   Write: Unimplemented

2.3.49 Port J Data Register (PTJ)

Address 0x0268 Access: User read/write(1)

	7	6	5	4	3	2	1	0
R	PTJ7	PTJ6	0	0	0	PTJ2	PTJ1	PTJ0
W								
Reset	0	0	0	0	0	0	0	0

Figure 2-47. Port J Data Register (PTJ)

1. Read: Anytime. The data source is depending on the data direction value.
   Write: Anytime

Table 2-43. PTJ Register Field Descriptions

Field	Description
7-6, 2-0 PTJ	**Port J general purpose input/output data**—Data Register, pin interrupt input/output The associated pin can be used as general purpose I/O. In general purpose output mode the register bit value is driven to the pin. If the associated data direction bit is set to 1, a read returns the value of the port register bit, otherwise the buffered pin input state is read. • Pin interrupts can be generated if enabled in input or output mode.

2.3.50 Port J Input Register (PTIJ)

Address 0x0269 Access: User read(1)

	7	6	5	4	3	2	1	0
R	PTIJ7	PTIJ6	0	0	0	PTIJ2	PTIJ1	PTIJ0
W								
Reset	u	u	u	u	u	u	u	u

= Unimplemented or Reserved u = Unaffected by reset

Figure 2-48. Port J Input Register (PTIJ)

1. Read: Anytime
   Write:Never, writes to this register have no effect.

Table 2-44. PTIJ Register Field Descriptions

Field	Description
7-6, 2-0 PTIJ	**Port J input data**— A read always returns the buffered input state of the associated pin. It can be used to detect overload or short circuit conditions on output pins.

2.3.51 Port J Data Direction Register (DDRJ)

Address 0x026A Access: User read/write(1)

	7	6	5	4	3	2	1	0
R	DDRJ7	DDRJ6	0	0	0	DDRJ2	DDRJ1	DDRJ0
W								
Reset	0	0	0	0	0	0	0	0

Figure 2-49. Port J Data Direction Register (DDRJ)

1. Read: Anytime
   Write: Anytime

Table 2-45. DDRJ Register Field Descriptions

Field	Description
7-6, 2-0 DDRJ	**Port J data direction**— This bit determines whether the associated pin is an input or output. 1 Associated pin is configured as output 0 Associated pin is configured as input

2.3.52 Port J Reduced Drive Register (RDRJ)

Address 0x026B Access: User read/write(1)

	7	6	5	4	3	2	1	0
R	RDRJ7	RDRJ6	0	0	0	RDRJ2	RDRJ1	RDRJ0
W								
Reset	0	0	0	0	0	0	0	0

Figure 2-50. Port J Reduced Drive Register (RDRJ)

1. Read: Anytime
   Write: Anytime

Table 2-46. RDRJ Register Field Descriptions

Field	Description
7-6, 2-0 RDRJ	**Port J reduced drive**—Select reduced drive for output pin This bit configures the drive strength of the associated output pin as either full or reduced. If a pin is used as input this bit has no effect. The reduced drive function is independent of which function is being used on a particular pin. 1 Reduced drive selected (approx. 1/5 of the full drive strength) 0 Full drive strength enabled

2.3.53 Port J Pull Device Enable Register (PERJ)

Address 0x026C Access: User read/write(1)

	7	6	5	4	3	2	1	0
R	PERJ7	PERJ6	0	0	0	PERJ2	PERJ1	PERJ0
W								
Reset	1	1	0	0	0	1	1	1

Figure 2-51. Port J Pull Device Enable Register (PERJ)

1. Read: Anytime
   Write: Anytime

Table 2-47. PERJ Register Field Descriptions

Field	Description
7-6, 2-0 PERJ	**Port J pull device enable**—Enable pull device on input pin This bit controls whether a pull device on the associated port input pin is active. If a pin is used as output this bit has no effect. The polarity is selected by the related polarity select register bit. 1 Pull device enabled 0 Pull device disabled

2.3.54 Port J Polarity Select Register (PPSJ)

Address 0x026D Access: User read/write(1)

	7	6	5	4	3	2	1	0
R	PPSJ7	PPSJ6	0	0	0	PPSJ2	PPSJ1	PPSJ0
W								
Reset	0	0	0	0	0	0	0	0

Figure 2-52. Port J Polarity Select Register (PPSJ)

1. Read: Anytime
   Write: Anytime

Table 2-48. PPSJ Register Field Descriptions

Field	Description
7-6, 2-0 PPSJ	**Port J pull device select**—Configure pull device and pin interrupt edge polarity on input pin This bit selects a pull-up or a pull-down device if enabled on the associated port input pin. This bit also selects the polarity of the active pin interrupt edge. 1 A pull-down device is selected; rising edge selected 0 A pull-up device is selected; falling edge selected

2.3.55 Port J Interrupt Enable Register (PIEJ)

Address 0x026E Access: User read/write(1)

	7	6	5	4	3	2	1	0
R	PIEJ7	PIEJ6	0	0	0	PIEJ2	PIEJ1	PIEJ0
W								
Reset	0	0	0	0	0	0	0	0

Figure 2-53. Port J Interrupt Enable Register (PIEJ)

1. Read: Anytime
   Write: Anytime

Table 2-49. PIEJ Register Field Descriptions

Field	Description
7-6, 2-0 PIEJ	**Port J interrupt enable**— This bit enables or disables on the edge sensitive pin interrupt on the associated pin. 1 Interrupt is enabled 0 Interrupt is disabled (interrupt flag masked)

2.3.56 Port J Interrupt Flag Register (PIFJ)

Address 0x026F Access: User read/write(1)

	7	6	5	4	3	2	1	0
R	PIFJ7	PIFJ6	0	0	0	PIFJ2	PIFJ1	PIFJ0
W								
Reset	0	0	0	0	0	0	0	0

Figure 2-54. Port J Interrupt Flag Register (PIFJ)

1. Read: Anytime
   Write: Anytime

Table 2-50. PIFJ Register Field Descriptions

Field	Description
7-6, 2-0 PIFJ	**Port J interrupt flag**— The flag bit is set after an active edge was applied to the associated input pin. This can be a rising or a falling edge based on the state of the polarity select register. Writing a logic “1” to the corresponding bit field clears the flag. 1 Active edge on the associated bit has occurred (an interrupt will occur if the associated enable bit is set) 0 No active edge occurred

2.3.57 Port AD Data Register (PT0AD)

Address 0x0270 Access: User read/write(1)

	7	6	5	4	3	2	1	0
R	0	0	0	0	0	0	PT0AD1	PT0AD0
W								
Altern. Function	—	—	—	—	—	—	AN9	AN8
Reset	0	0	0	0	0	0	0	0

Figure 2-55. Port AD Data Register (PT0AD)

1. Read: Anytime. The data source is depending on the data direction value.
   Write: Anytime

Table 2-51. PT0AD Register Field Descriptions

Field	Description
1-0 PT0AD	**Port AD general purpose input/output data**—Data Register, ATD AN analog input When not used with the alternative function, the associated pin can be used as general purpose I/O. In general purpose output mode the register bit value is driven to the pin. If the associated data direction bit is set to 1, a read returns the value of the port register bit, otherwise the buffered pin input state is read.

2.3.58 Port AD Data Register (PT1AD)

Address 0x0271 Access: User read/write(1)

	7	6	5	4	3	2	1	0
R W	PT1AD7	PT1AD6	PT1AD5	PT1AD4	PT1AD3	PT1AD2	PT1AD1	PT1AD0
Altern. Function	AN7	AN6	AN5	AN4	AN3	AN2	AN1	AN0
Reset	0	0	0	0	0	0	0	0

Figure 2-56. Port AD Data Register (PT1AD)

1. Read: Anytime. The data source is depending on the data direction value.
   Write: Anytime

Table 2-52. PT1AD Register Field Descriptions

Field	Description
7-0 PT1AD	**Port AD general purpose input/output data**—Data Register, ATD AN analog input When not used with the alternative function, the associated pin can be used as general purpose I/O. In general purpose output mode the register bit value is driven to the pin. If the associated data direction bit is set to 1, a read returns the value of the port register bit, otherwise the buffered pin input state is read.

2.3.59 Port AD Data Direction Register (DDR0AD)

Address 0x0272 Access: User read/write(1)

	7	6	5	4	3	2	1	0
R	0	0	0	0	0	0	DDR0AD1	DDR0AD0
W								
Reset	0	0	0	0	0	0	0	0

Figure 2-57. Port AD Data Direction Register (DDR0AD)

1. Read: Anytime
   Write: Anytime

Table 2-53. DDR0AD Register Field Descriptions

Field	Description
1-0 DDR0AD	**Port AD data direction**— This bit determines whether the associated pin is an input or output. To use the digital input function the ATD Digital Input Enable Register (ATDDIEN) has to be set to logic level “1”. 1 Associated pin is configured as output 0 Associated pin is configured as input

2.3.60 Port AD Data Direction Register (DDR1AD)

Address 0x0273 Access: User read/write(1)

	7	6	5	4	3	2	1	0
R W	DDR1AD7	DDR1AD6	DDR1AD5	DDR1AD4	DDR1AD3	DDR1AD2	DDR1AD1	DDR1AD0
Reset	0	0	0	0	0	0	0	0

Figure 2-58. Port AD Data Direction Register (DDR1AD)

1. Read: Anytime
   Write: Anytime

Table 2-54. DDR1AD Register Field Descriptions

Field	Description
7-0 DDR1AD	**Port AD data direction**— This bit determines whether the associated pin is an input or output. To use the digital input function the ATD Digital Input Enable Register (ATDDIEN) has to be set to logic level “1”. 1 Associated pin is configured as output 0 Associated pin is configured as input

2.3.61 Port AD Reduced Drive Register (RDR0AD)

Address 0x0274 Access: User read/write(1)

	7	6	5	4	3	2	1	0
R	0	0	0	0	0	0	RDR0AD1	RDR0AD0
W								
Reset	0	0	0	0	0	0	0	0

Figure 2-59. Port AD Reduced Drive Register (RDR0AD)

1. Read: Anytime
   Write: Anytime

Table 2-55. RDR0AD Register Field Descriptions

Field	Description
1-0 RDR0AD	**Port AD reduced drive**—Select reduced drive for output pin This bit configures the drive strength of the associated output pin as either full or reduced. If a pin is used as input this bit has no effect. The reduced drive function is independent of which function is being used on a particular pin. 1 Reduced drive selected (approx. 1/5 of the full drive strength) 0 Full drive strength enabled

2.3.62 Port AD Reduced Drive Register (RDR1AD)

Address 0x0275 Access: User read/write(1)

	7	6	5	4	3	2	1	0
R W	RDR1AD7	RDR1AD6	RDR1AD5	RDR1AD4	RDR1AD3	RDR1AD2	RDR1AD1	RDR1AD0
Reset	0	0	0	0	0	0	0	0

Figure 2-60. Port AD Reduced Drive Register (RDR1AD)

1. Read: Anytime
   Write: Anytime

Table 2-56. RDR1AD Register Field Descriptions

Field	Description
7-0 RDR1AD	**Port AD reduced drive**—Select reduced drive for output pin This bit configures the drive strength of the associated output pin as either full or reduced. If a pin is used as input this bit has no effect. The reduced drive function is independent of which function is being used on a particular pin. 1 Reduced drive selected (approx. 1/5 of the full drive strength) 0 Full drive strength enabled

2.3.63 Port AD Pull Up Enable Register (PER0AD)

Address 0x0276 Access: User read/write(1)

	7	6	5	4	3	2	1	0
R	0	0	0	0	0	0	PER0AD1	PER0AD0
W								
Reset	0	0	0	0	0	0	0	0

Figure 2-61. Port AD Pull Up Enable Register (PER0AD)

1. Read: Anytime
   Write: Anytime

Table 2-57. PER0AD Register Field Descriptions

Field	Description
1-0 PER0AD	**Port AD pull-up enable**—Enable pull-up device on input pin This bit controls whether a pull device on the associated port input pin is active. If a pin is used as output this bit has no effect. 1 Pull device enabled 0 Pull device disabled

2.3.64 Port AD Pull Up Enable Register (PER1AD)

Address 0x0277 Access: User read/write(1)

	7	6	5	4	3	2	1	0
R W	PER1AD7	PER1AD6	PER1AD5	PER1AD4	PER1AD3	PER1AD2	PER1AD1	PER1AD0
Reset	0	0	0	0	0	0	0	0

Figure 2-62. Port AD Pull Up Enable Register (PER1AD)

1. Read: Anytime
   Write: Anytime

Table 2-58. PER1AD Register Field Descriptions

Field	Description
7-0 PER1AD	**Port AD pull-up enable**—Enable pull-up device on input pin This bit controls whether a pull device on the associated port input pin is active. If a pin is used as output this bit has no effect. 1 Pull device enabled 0 Pull device disabled

2.3.65 PIM Reserved Registers

Address 0x0278-0x27F Access: User read(1)

	7	6	5	4	3	2	1	0
R	0	0	0	0	0	0	0	0
W								
Reset	0	0	0	0	0	0	0	0

= Unimplemented or Reserved u = Unaffected by reset

Figure 2-63. PIM Reserved Registers

1. Read: Always reads 0x00
   Write: Unimplemented

2.4 Functional Description

2.4.1 General

Each pin except PE0, PE1, and BKGD can act as general purpose I/O. In addition each pin can act as an output or input of a peripheral module.

2.4.2 Registers

A set of configuration registers is common to all ports with exception of the ATD port (Table 2-59). All registers can be written at any time, however a specific configuration might not become active.

For example selecting a pull-up device: This device does not become active while the port is used as a push-pull output.

Table 2-59. Register availability per port[1]

Port	Data	Input	Data Direction	Reduced Drive	Pull Enable	Polarity Select	Wired-Or Mode	Interrupt Enable	Interrupt Flag	Routing
A	yes	-	yes	yes	yes	-	-	-	-	-
B	yes	-	yes			-	-	-	-	-
E	yes	-	yes			-	-	-	-	-
T	yes	yes	yes	yes	yes	yes	-	-	-	yes
S	yes	yes	yes	yes	yes	yes	yes	-	-	-
M	yes	yes	yes	yes	yes	yes	yes	-	-	yes
P	yes	yes	yes	yes	yes	yes	-	yes	yes	-
J	yes	yes	yes	yes	yes	yes	-	yes	yes	-
AD	yes	-	yes	yes	yes	-	-	-	-	-

1. Each cell represents one register with individual configuration bits

2.4.2.1 Data register (PORTx, PTx)

This register holds the value driven out to the pin if the pin is used as a general purpose I/O.

Writing to this register has only an effect on the pin if the pin is used as general purpose output. When reading this address, the buffered state of the pin is returned if the associated data direction register bit is set to “0”.

If the data direction register bits are set to logic level “1”, the contents of the data register is returned. This is independent of any other configuration (Figure 2-64).

2.4.2.2 Input register (PTIx)

This register is read-only and always returns the buffered state of the pin (Figure 2-64).

2.4.2.3 Data direction register (DDRx)

This register defines whether the pin is used as an general purpose input or an output.

If a peripheral module controls the pin the contents of the data direction register is ignored (Figure 2-64).

Independent of the pin usage with a peripheral module this register determines the source of data when reading the associated data register address (2.4.2.1/2-101).

NOTE

Due to internal synchronization circuits, it can take up to 2 bus clock cycles until the correct value is read on port data or port input registers, when changing the data direction register.

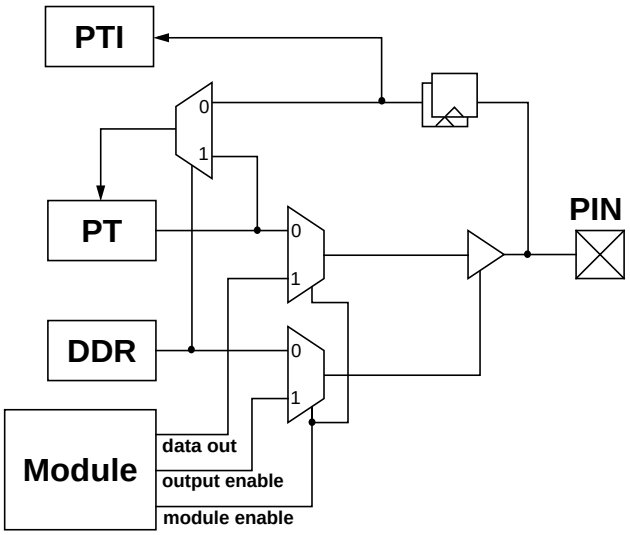

Figure 2-64. Illustration of I/O pin functionality

2.4.2.4 Reduced drive register (RDRx)

If the pin is used as an output this register allows the configuration of the drive strength independent of the use with a peripheral module.

2.4.2.5 Pull device enable register (PERx)

This register turns on a pull-up or pull-down device on the related pins determined by the associated polarity select register (2.4.2.6/2-102).

The pull device becomes active only if the pin is used as an input or as a wired-or output. Some peripheral module only allow certain configurations of pull devices to become active. Refer to the respective bit descriptions.

2.4.2.6 Polarity select register (PPSx)

This register selects either a pull-up or pull-down device if enabled.

It becomes only active if the pin is used as an input. A pull-up device can be activated if the pin is used as a wired-or output.

2.4.2.7 Wired-or mode register (WOMx)

If the pin is used as an output this register turns off the active high drive. This allows wired-or type connections of outputs.

2.4.2.8 Interrupt enable register (PIEx)

If the pin is used as an interrupt input this register serves as a mask to the interrupt flag to enable/disable the interrupt.

2.4.2.9 Interrupt flag register (PIFx)

If the pin is used as an interrupt input this register holds the interrupt flag after a valid pin event.

2.4.2.10 Module routing register (PTTRR)

This register allows software re-configuration of the pinouts of the different package options for specific peripherals:

- PTTRR supports the re-routing of the PWM channels to alternative ports

2.4.3 Pins and Ports

NOTE

Please refer to the device pinout section to determine the pin availability in the different package options.

2.4.3.1 BKGD pin

The BKGD pin is associated with the BDM module.

During reset, the BKGD pin is used as MODC input.

2.4.3.2 Port A, B

Port A pins PA[7:0] and Port B pins PB[7:0] can be used for general purpose I/O.

2.4.3.3 Port E

Port E is associated with the free-running clock outputs ECLK, ECLKX2 and interrupt inputs $\overline{\text{IRQ}}$ and $\overline{\text{XIRQ}}$.

Port E pins PE[6:5,3:2] can be used for either general purpose I/O or with the alternative functions.

Port E pin PE[7] an be used for either general purpose I/O or as the free-running clock ECLKX2 output running at the core clock rate.

Port E pin PE[4] an be used for either general purpose I/O or as the free-running clock ECLK output running at the bus clock rate or at the programmed divided clock rate.

Port E pin PE[1] can be used for either general purpose input or as the level- or falling edge-sensitive $\overline{\text{IRQ}}$ interrupt input. $\overline{\text{IRQ}}$ will be enabled by setting the IRQEN configuration bit (2.3.14/2-70) and clearing the I-bit in the CPU condition code register. It is inhibited at reset so this pin is initially configured as a simple input with a pull-up.

Port E pin PE[0] can be used for either general purpose input or as the level-sensitive $\overline{\text{XIRQ}}$ interrupt. $\overline{\text{XIRQ}}$ can be enabled by clearing the X-bit in the CPU condition code register. It is inhibited at reset so this pin is initially configured as a high-impedance input with a pull-up.

2.4.3.4 Port T

This port is associated with TIM and PWM.

Port T pins PT[5:4,0] can be used for either general purpose I/O, or with the routed PWM or with the channels of the standard Timer subsystem.

Port T pins PT[7:6,3:1] can be used for either general purpose I/O, or with the channels of the standard Timer subsystem.

2.4.3.5 Port S

This port is associated with SCI.

Port S pins PS[1:0] can be used either for general purpose I/O, or with the SCI subsystem.

Port S pins PS[3:2] can be used for general purpose I/O.

2.4.3.6 Port M

This port is associated with CAN and SPI.

Port M pins PM[1:0] can be used for either general purpose I/O, or with the CAN subsystem.

Port M pins PM[5:2] can be used for general purpose I/O, or with the SPI subsystem.

2.4.3.7 Port P

This port is associated with the PWM.

Port P pins PP[7,5:0] can be used for either general purpose I/O with pin interrupt capability, or with the PWM subsystem.

2.4.3.8 Port J

Port J pins PJ[7:6,2:0] can be used for general purpose I/O with pin-interrupt capability.

2.4.3.9 Port AD

This port is associated with the ATD.

Port AD pins PAD[9:0] can be used for either general purpose I/O, or with the ATD subsystem.

2.4.4 Pin interrupts

Ports P and J offer pin interrupt capability. The interrupt enable as well as the sensitivity to rising or falling edges can be individually configured on per-pin basis. All bits/pins in a port share the same interrupt vector. Interrupts can be used with the pins configured as inputs or outputs.

An interrupt is generated when a bit in the port interrupt flag register and its corresponding port interrupt enable bit are both set. The pin interrupt feature is also capable to wake up the CPU when it is in STOP or WAIT mode.

A digital filter on each pin prevents pulses (Figure 2-66) shorter than a specified time from generating an interrupt. The minimum time varies over process conditions, temperature and voltage (Figure 2-65 and Table 2-60).

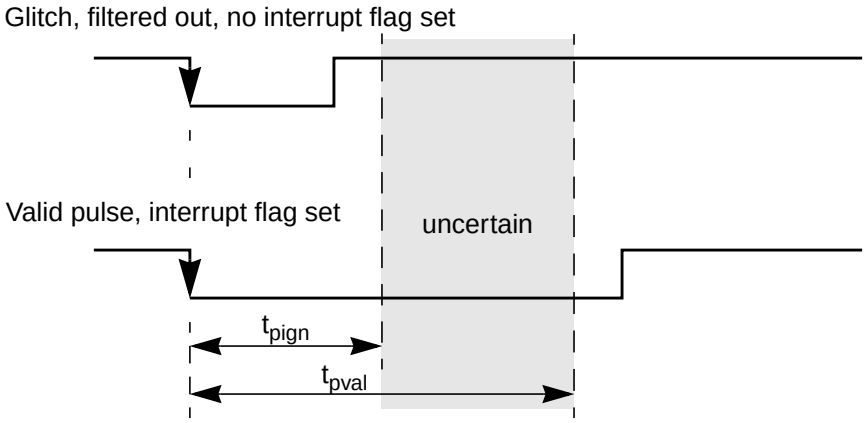

Figure 2-65. Interrupt Glitch Filter on Port P and J (PPS=0)

Table 2-60. Pulse Detection Criteria

Pulse	Mode		
	$\overline{STOP}$		STOP(1)
		Unit	
Ignored	$t_{pulse} \leq 3$	bus clocks	$t_{pulse} \leq t_{pign}$
Uncertain	$3 < t_{pulse} < 4$	bus clocks	$t_{pign} < t_{pulse} < t_{pval}$
Valid	$t_{pulse} \geq 4$	bus clocks	$t_{pulse} \geq t_{pval}$

1. These values include the spread of the oscillator frequency over temperature, voltage and process.

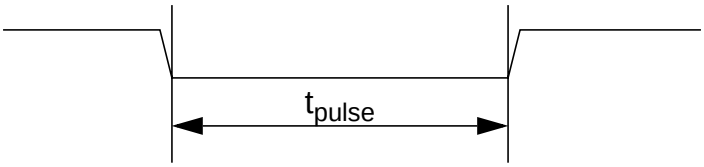

Figure 2-66. Pulse Illustration

A valid edge on an input is detected if 4 consecutive samples of a passive level are followed by 4 consecutive samples of an active level directly or indirectly.

The filters are continuously clocked by the bus clock in RUN and WAIT mode. In STOP mode the clock is generated by an RC-oscillator in the Port Integration Module. To maximize current saving the RC oscillator runs only if the following condition is true on any pin individually:

Sample count <= 4 and interrupt enabled (PIE=1) and interrupt flag not set (PIF=0).

2.5 Initialization Information

2.5.1 Port Data and Data Direction Register writes

It is not recommended to write PORTx/PTx and DDRx in a word access. When changing the register pins from inputs to outputs, the data may have extra transitions during the write access. Initialize the port data register before enabling the outputs.

Chapter 3
Memory Map Control (S12PMMCV1)

Table 3-1. Revision History Table

Table 3-2.

Rev. No. (Item No.)	Date (Submitted By)	Sections Affected	Substantial Change(s)
01.03	10.JAN.2008	General	Minor Changes
01.04	13.JAN.2010	Figure 3-2	Added reserved registers
01.05	22.APR.2010	General	Removed references to the MMCCTL1 register

3.1 Introduction

The S12PMMC module controls the access to all internal memories and peripherals for the CPU12 and S12SBDM module. It regulates access priorities and determines the address mapping of the on-chip ressources. Figure 3-1 shows a block diagram of the S12PMMC module.

3.1.1 Glossary

Table 3-3. Glossary Of Terms

Term	Definition
Local Addresses	Address within the CPU12's Local Address Map (Figure 3-10)
Global Addresse	Address within the Global Address Map (Figure 3-10)
Aligned Bus Access	Bus access to an even address.
Misaligned Bus Access	Bus access to an odd address.
NS	Normal Single-Chip Mode
SS	Special Single-Chip Mode
Unimplemented Address Ranges	Address ranges which are not mapped to any on-chip ressource.
P-Flash	Program Flash
D-Plash	Data Flash
NVM	Non-volatile Memory; P-Flash or D-Flash
IFR	NVM Information Row. Refer to FTMRC Block Guide

3.1.2 Overview

The S12PMMC connects the CPU12's and the S12SBDM's bus interfaces to the MCU's on-chip ressources (memories and peripherals). It arbitrates the bus accesses and detemines all of the MCU's memory maps. Furthermore, the S12PMMC is responsible for constraining memory accesses on secured devices and for selecting the MCU's functional mode.

3.1.3 Features

The main features of this block are:

- Paging capability to support a global 256 KByte memory address space
- Bus arbitration between the masters CPU12, S12SBDM to different resources.
- MCU operation mode control
- MCU security control
- Separate memory map schemes for each master CPU12, S12SBDM
- Generation of system reset when CPU12 accesses an unimplemented address (i.e., an address which does not belong to any of the on-chip modules) in single-chip modes

3.1.4 Modes of Operation

The S12PMMC selects the MCU's functional mode. It also determines the devices behavior in secured and unsecured state.

3.1.4.1 Functional Modes

Two funtional modes are implementes on devices of the S12I product family:

- Normal Single Chip (NS)
  The mode used for running applications.
- Special Single Chip Mode (SS)
  A debug mode which causes the device to enter BDM Active Mode after each reset. Peripherals may also provide special debug features in this mode.

3.1.4.2 Security

S12I devives can be secured to prohibit external access to the on-chip P-Flash. The S12PMMC module determines the access permissions to the on-chip memories in secured and unsecured state.

3.1.5 Block Diagram

Figure 3-1 shows a block diagram of the S12PMMC.

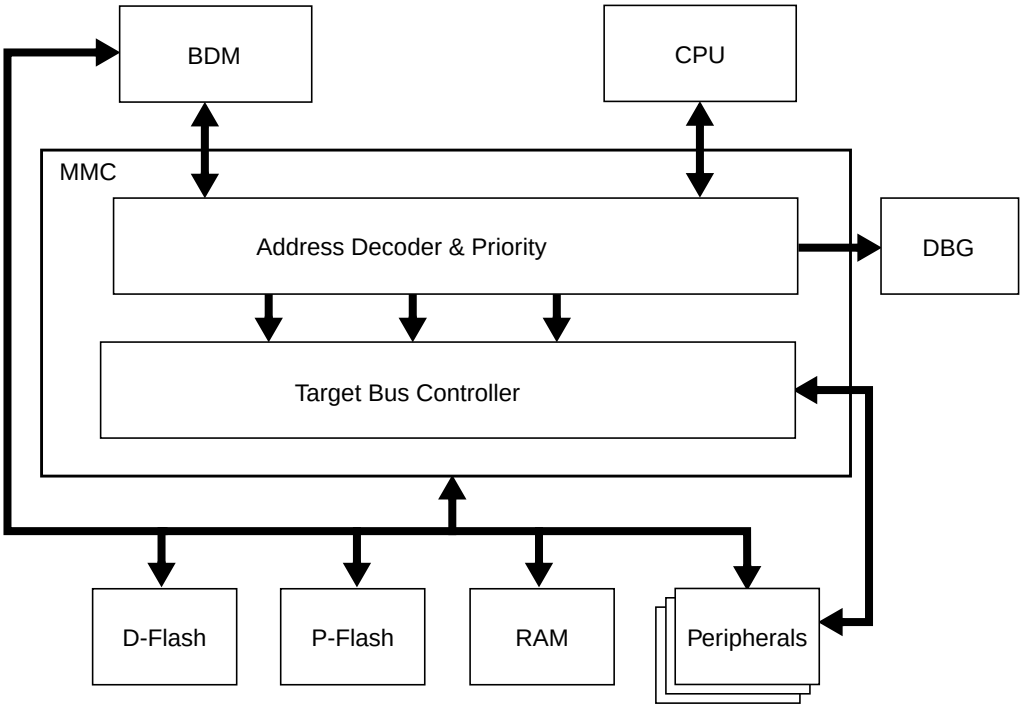

Figure 3-1. S12PMMC Block Diagram

3.2 External Signal Description

The S12PMMC uses two external pins to determine the devices operating mode: RESET and MODC (Table 3-4) See Device User Guide (DUG) for the mapping of these signals to device pins.

Table 3-4. External System Pins Associated With S12PMMC

Pin Name	Pin Functions	Description
$\overline{\text{RESET}}$ (See DUG)	$\overline{\text{RESET}}$	The $\overline{\text{RESET}}$ pin is used the select the MCU's operating mode.
$\overline{\text{MODC}}$ (See DUG)	MODC	The MODC pin is captured at the rising edge of the $\overline{\text{RESET}}$ pin. The captured value determines the MCU's operating mode.

3.3 Memory Map and Registers

3.3.1 Module Memory Map

A summary of the registers associated with the S12PMMC block is shown in Figure 3-2. Detailed descriptions of the registers and bits are given in the subsections that follow.

Address	Register Name		Bit 7	6	5	4	3	2	1	Bit 0
0x000A	Reserved	R	0	0	0	0	0	0	0	0
		W								
0x000B	MODE	R	MODC	0	0	0	0	0	0	0
		W								
0x0010	Reserved	R	0	0	0	0	0	0	0	0
		W								
0x0011	DIRECT	R	DP15	DP14	DP13	DP12	DP11	DP10	DP9	DP8
		W								
0x0012	Reserved	R	0	0	0	0	0	0	0	0
		W								
0x0013	Reserved	R	0	0	0	0	0	0	0	0
		W								
0x0014	Reserved	R	0	0	0	0	0	0	0	0
		W								
0x0015	PPAGE	R	0	0	0	0	PIX3	PIX2	PIX1	PIX0
		W								

= Unimplemented or Reserved

Figure 3-2. MMC Register Summary

3.3.2 Register Descriptions

This section consists of the S12PMMC control register descriptions in address order.

3.3.2.1 Mode Register (MODE)

Address: 0x000B

	7	6	5	4	3	2	1	0
R	MODC	0	0	0	0	0	0	0
W								
Reset	MODC[1]	0	0	0	0	0	0	0

1. External signal (see Table 3-4).

= Unimplemented or Reserved

Figure 3-3. Mode Register (MODE)

Read: Anytime.

Write: Only if a transition is allowed (see Figure 3-4).

The MODC bit of the MODE register is used to select the MCU's operating mode.

Table 3-5. MODE Field Descriptions

Field	Description
7 MODC	**Mode Select Bit** — This bit controls the current operating mode during $\overline{\text{RESET}}$ high (inactive). The external mode pin MODC determines the operating mode during $\overline{\text{RESET}}$ low (active). The state of the pin is registered into the respective register bit after the $\overline{\text{RESET}}$ signal goes inactive (see Figure 3-4). Write restrictions exist to disallow transitions between certain modes. Figure 3-4 illustrates all allowed mode changes. Attempting non authorized transitions will not change the MODE bit, but it will block further writes to the register bit except in special modes. Write accesses to the MODE register are blocked when the device is secured.

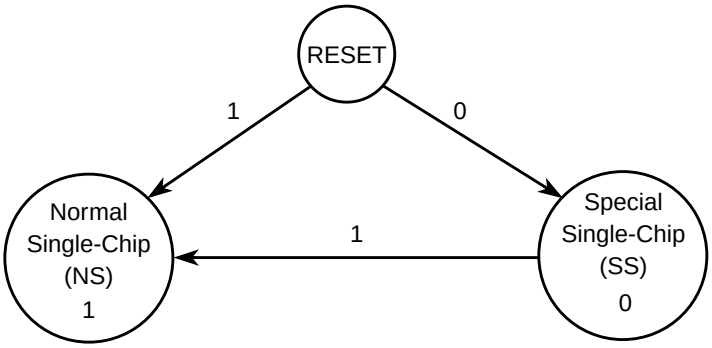

Figure 3-4. Mode Transition Diagram when MCU is Unsecured

3.3.2.2 Direct Page Register (DIRECT)

Address: 0x0011

	7	6	5	4	3	2	1	0
R W	DP15	DP14	DP13	DP12	DP11	DP10	DP9	DP8
Reset	0	0	0	0	0	0	0	0

Figure 3-5. Direct Register (DIRECT)

Read: Anytime

Write: anytime in special SS, writr-one in NS.

This register determines the position of the 256 Byte direct page within the memory map.It is valid for both global and local mapping scheme.

Table 3-6. DIRECT Field Descriptions

Field	Description
7–0 DP[15:8]	**Direct Page Index Bits 15–8** — These bits are used by the CPU when performing accesses using the direct addressing mode. These register bits form bits [15:8] of the local address (see Figure 3-6).

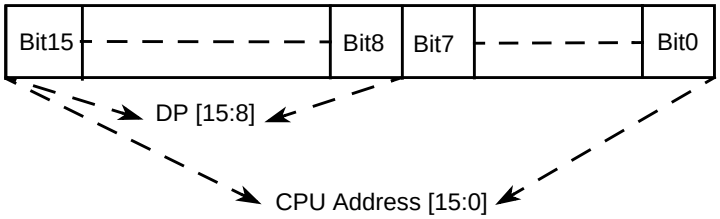

Figure 3-6. DIRECT Address Mapping

Example 3-1. This example demonstrates usage of the Direct Addressing Mode

```
MOVB      #$80,DIRECT       ;Set DIRECT register to 0x80. Write once only.
                            ;Global data accesses to the range 0xXX_80XX can be direct.
                            ;Logical data accesses to the range 0x80XX are direct.

LDY       <$00              ;Load the Y index register from 0x8000 (direct access).
                            ;< operator forces direct access on some assemblers but in
                            ;many cases assemblers are "direct page aware" and can
                            ;automatically select direct mode.
```

3.3.2.3 Program Page Index Register (PPAGE)

Address: 0x0030

	7	6	5	4	3	2	1	0
R	0	0	0	0	PIX3	PIX2	PIX1	PIX0
W								
Reset	0	0	0	0	1	1	1	0

Figure 3-7. Program Page Index Register (PPAGE)

Read: Anytime

Write: Anytime

These four index bits are used to map 16KB blocks into the Flash page window located in the local (CPU or BDM) memory map from address 0x8000 to address 0xBFFF (see Figure 3-8). This supports accessing up to 256 KB of Flash (in the Global map) within the 64KB Local map. The PPAGE index register is effectively used to construct paged Flash addresses in the Local map format. The CPU has special access to read and write this register directly during execution of CALL and RTC instructions.

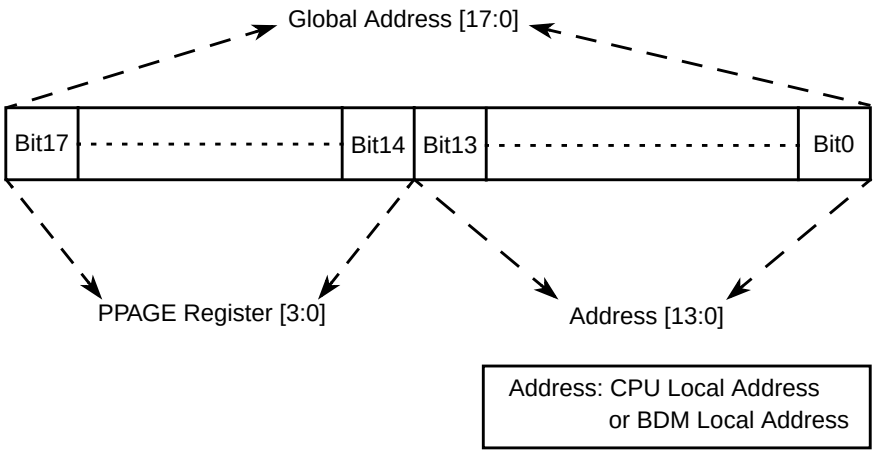

Figure 3-8. PPAGE Address Mapping

NOTE

Writes to this register using the special access of the CALL and RTC instructions will be complete before the end of the instruction execution.

Table 3-7. PPAGE Field Descriptions

Field	Description
3–0 PIX[3:0]	**Program Page Index Bits 3–0** — These page index bits are used to select which of the 256 P-Flash or ROM array pages is to be accessed in the Program Page Window.

The fixed 16KB page from 0x0000 to 0x3FFF is the page number 0x0C. Parts of this page are covered by Registers, D-Flash and RAM space. See SoC Guide for details.

The fixed 16KB page from 0x4000–0x7FFF is the page number 0x0D.

The reset value of 0x0E ensures that there is linear Flash space available between addresses 0x0000 and 0xFFFF out of reset.

The fixed 16KB page from 0xC000-0xFFFF is the page number 0x0F.

3.4 Functional Description

The S12PMMC block performs several basic functions of the S12I sub-system operation: MCU operation modes, priority control, address mapping, select signal generation and access limitations for the system. Each aspect is described in the following subsections.

3.4.1 MCU Operating Modes

- Normal single chip mode

  This is the operation mode for running application codeThere is no external bus in this mode.
- Special single chip mode

This mode is generally used for debugging operation, boot-strapping or security related operations. The active background debug mode is in control of the CPU code execution and the BDM firmware is waiting for serial commands sent through the BKGD pin.

3.4.2 Memory Map Scheme

3.4.2.1 CPU and BDM Memory Map Scheme

The BDM firmware lookup tables and BDM register memory locations share addresses with other modules; however they are not visible in the memory map during user's code execution. The BDM memory resources are enabled only during the READ_BD and WRITE_BD access cycles to distinguish between accesses to the BDM memory area and accesses to the other modules. (Refer to BDM Block Guide for further details).

When the MCU enters active BDM mode, the BDM firmware lookup tables and the BDM registers become visible in the local memory map in the range 0xFF00-0xFFFF (global address 0x3_FF00 - 0x3_FFFF) and the CPU begins execution of firmware commands or the BDM begins execution of hardware commands. The resources which share memory space with the BDM module will not be visible in the memory map during active BDM mode.

Please note that after the MCU enters active BDM mode the BDM firmware lookup tables and the BDM registers will also be visible between addresses 0xBF00 and 0xBFFF if the PPAGE register contains value of 0x0F.

3.4.2.1.1 Expansion of the Local Address Map

Expansion of the CPU Local Address Map

The program page index register in S12PMMC allows accessing up to 256KB of P-Flash in the global memory map by using the four index bits (PPAGE[3:0]) to page 16x16 KB blocks into the program page window located from address 0x8000 to address 0xBFFF in the local CPU memory map.

The page value for the program page window is stored in the PPAGE register. The value of the PPAGE register can be read or written by normal memory accesses as well as by the CALL and RTC instructions (see Section 3.6.1, "CALL and RTC Instructions).

Control registers, vector space and parts of the on-chip memories are located in unpaged portions of the 64KB local CPU address space.

The starting address of an interrupt service routine must be located in unpaged memory unless the user is certain that the PPAGE register will be set to the appropriate value when the service routine is called. However an interrupt service routine can call other routines that are in paged memory. The upper 16KB block of the local CPU memory space (0xC000–0xFFFF) is unpaged. It is recommended that all reset and interrupt vectors point to locations in this area or to the other unmapped pages sections of the local CPU memory map.

Expansion of the BDM Local Address Map

PPAGE and BDMPPR register is also used for the expansion of the BDM local address to the global address. These registers can be read and written by the BDM.

The BDM expansion scheme is the same as the CPU expansion scheme.

The four BDMPPR Program Page index bits allow access to the full 256KB address map that can be accessed with 18 address bits.

The BDM program page index register (BDMPPR) is used only when the feature is enabled in BDM and, in the case the CPU is executing a firmware command which uses CPU instructions, or by a BDM hardware commands. See the BDM Block Guide for further details. (see Figure 3-9).

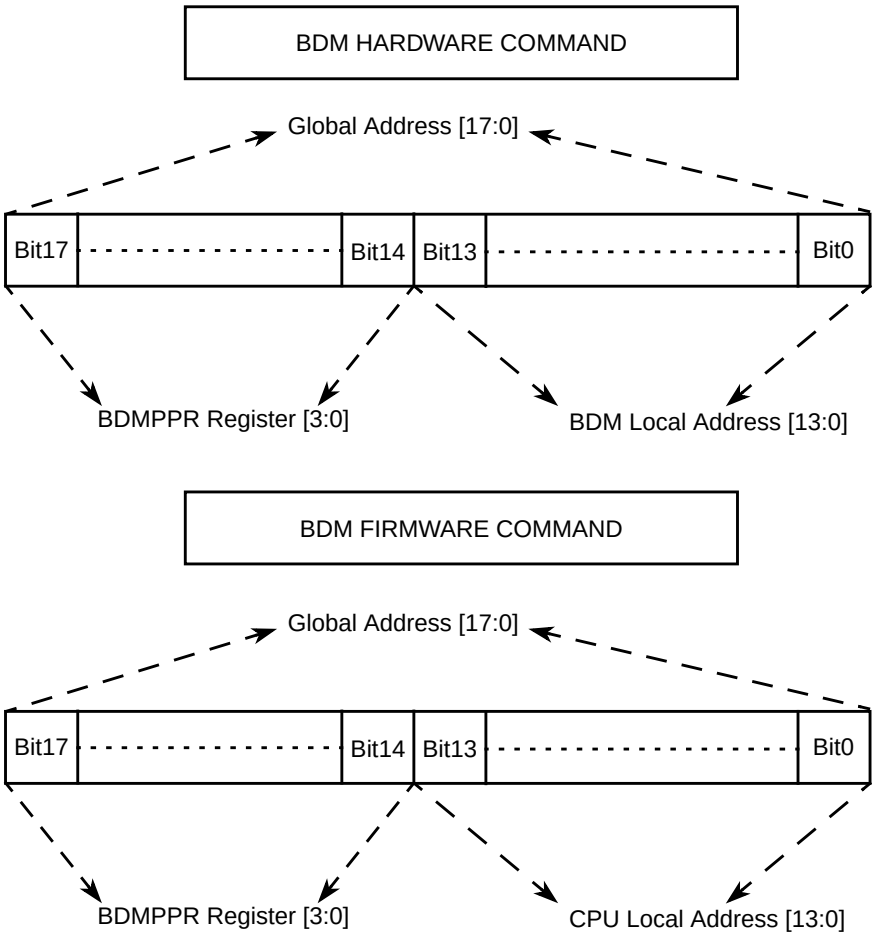

Figure 3-9. BDMPPR Address Mapping

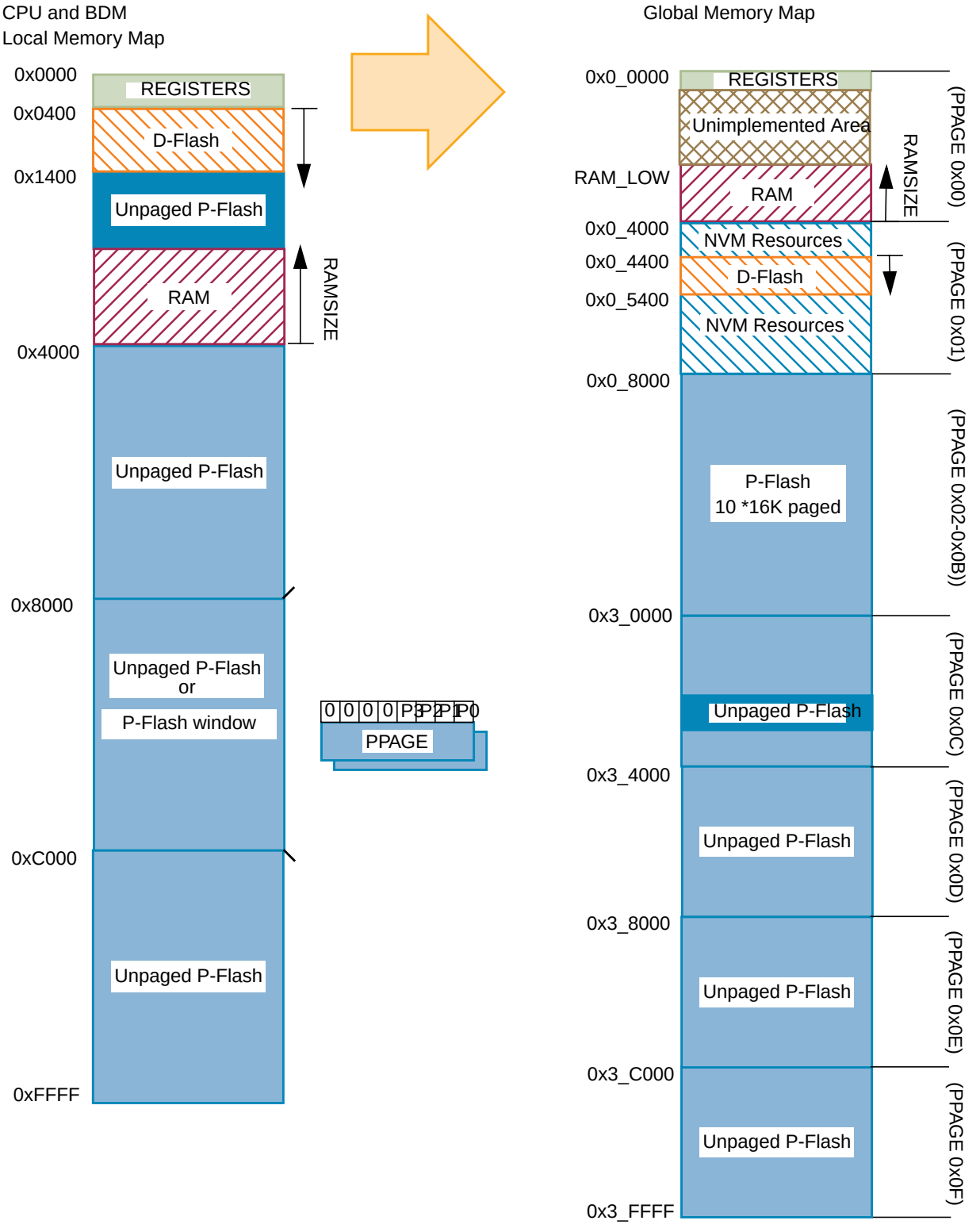

Figure 3-10. Local to Global Address Mapping

3.5 Implemented Memory in the System Memory Architecture

Each memory can be implemented in its maximum allowed size. But some devices have been defined for smaller sizes, which means less implemented pages. All non implemented pages are called unimplemented areas.

- Registers has a fixed size of 1KB, accessible via xbus0.
- SRAM has a maximum size of 11KB, accessible via xbus0.
- D-Flash has a fixed size of 4KB accessible via xbus0.
- P-Flash has a maximum size of 224KB, accessible via xbus0.
- NVM resources (IFR) including D-Flash have maximum size of 16KB (PPAGE 0x01).

3.5.0.1 Implemented Memory Map

The global memory spaces reserved for the internal resources (RAM, D-Flash, and P-Flash) are not determined by the MMC module. Size of the individual internal resources are however fixed in the design of the device cannot be changed by the user. Please refer to the SoC Guide for further details. Figure 3-11 and Table 3-8 show the memory spaces occupied by the on-chip resources. Please note that the memory spaces have fixed top addresses.

Table 3-8. Global Implemented Memory Space

Internal Resource	Bottom Address	Top Address
Registers	0x0_0000	0x0_03FF
System RAM	RAM_LOW = 0x0_4000 minus RAMSIZE(1)	0x0_3FFF
D-Flash	0x0_4400	0x0_53FF
P-Flash	PF_LOW = 0x4_0000 minus FLASHSIZE(2)	0x3_FFFF

1. RAMSIZE is the hexadecimal value of RAM SIZE in bytes
2. FLASHSIZE is the hexadecimal value of FLASH SIZE in bytes

In single-chip modes accesses by the CPU12 (except for firmware commands) to any of the unimplemented areas (see Figure 3-11) will result in an illegal access reset (system reset). BDM accesses to the unimplemented areas are allowed but the data will be undefined.

No misaligned word access from the BDM module will occur; these accesses are blocked in the BDM module (Refer to BDM Block Guide).

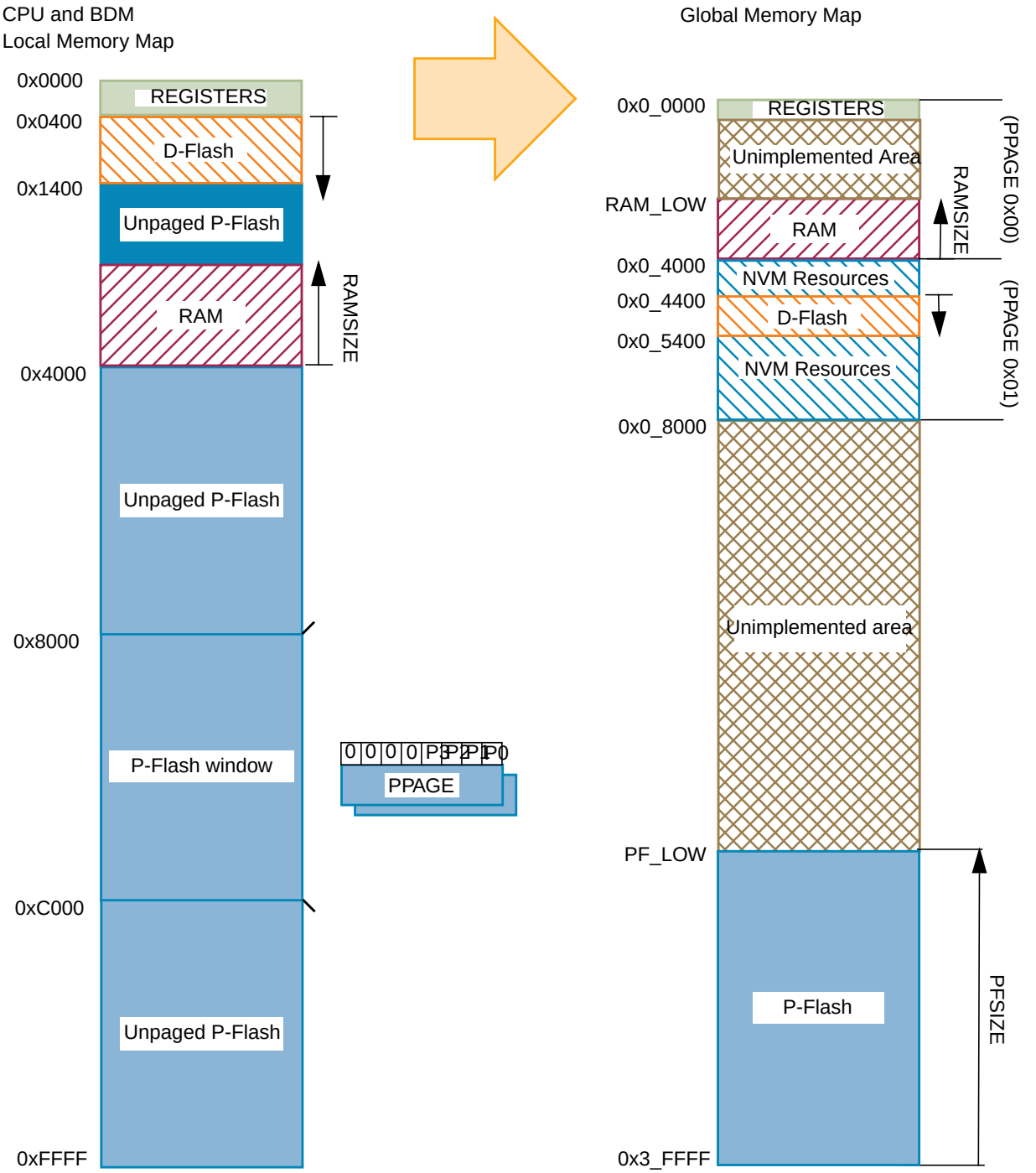

Figure 3-11. Implemented Global Address Mapping

3.5.1 Chip Bus Control

The S12PMMC controls the address buses and the data buses that interface the bus masters (CPU12, S12SBDM) with the rest of the system (master buses). In addition the MMC handles all CPU read data bus swapping operations. All internal resources are connected to specific target buses (see Figure 3-12).

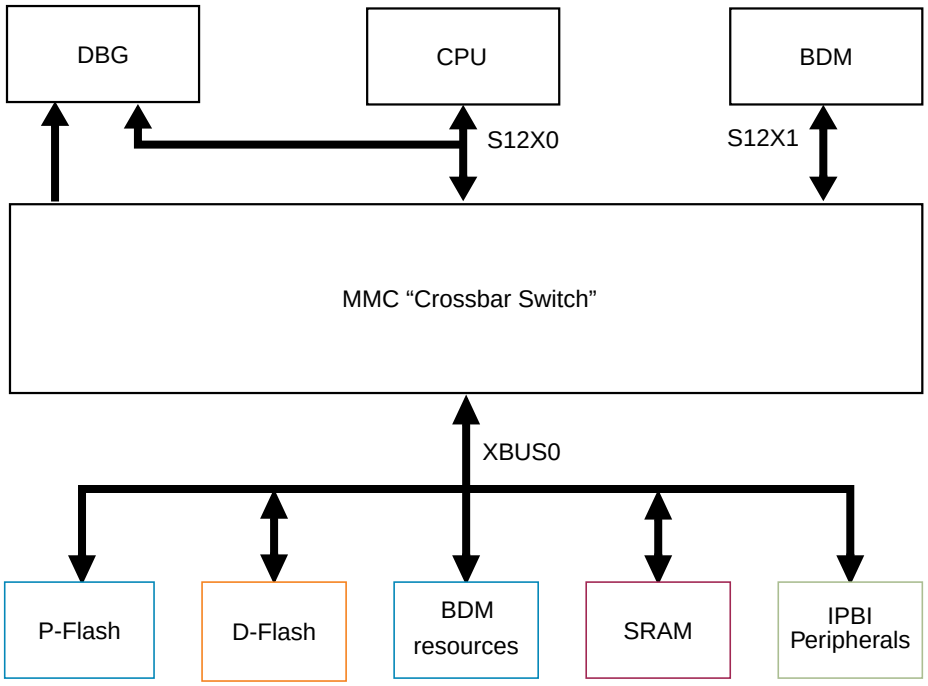

Figure 3-12. S12I platform

3.5.1.1 Master Bus Prioritization regarding Access Conflicts on Target Buses

The arbitration scheme allows only one master to be connected to a target at any given time. The following rules apply when prioritizing accesses from different masters to the same target bus:

- CPU12 always has priority over BDM.
- BDM has priority over CPU12 when its access is stalled for more than 128 cycles. In the later case the CPU will be stalled after finishing the current operation and the BDM will gain access to the bus.

3.5.2 Interrupts

The MMC does not generate any interrupts.

3.6 Initialization/Application Information

3.6.1 CALL and RTC Instructions

CALL and RTC instructions are uninterruptable CPU instructions that automate page switching in the program page window. The CALL instruction is similar to the JSR instruction, but the subroutine that is called can be located anywhere in the local address space or in any Flash or ROM page visible through the program page window. The CALL instruction calculates and stacks a return address, stacks the current PPAGE value and writes a new instruction-supplied value to the PPAGE register. The PPAGE value controls which of the 256 possible pages is visible through the 16 Kbyte program page window in the 64 Kbyte local CPU memory map. Execution then begins at the address of the called subroutine.

During the execution of the CALL instruction, the CPU performs the following steps:

1. Writes the current PPAGE value into an internal temporary register and writes the new instruction-supplied PPAGE value into the PPAGE register
2. Calculates the address of the next instruction after the CALL instruction (the return address) and pushes this 16-bit value onto the stack
3. Pushes the temporarily stored PPAGE value onto the stack
4. Calculates the effective address of the subroutine, refills the queue and begins execution at the new address

This sequence is uninterruptable. There is no need to inhibit interrupts during the CALL instruction execution. A CALL instruction can be performed from any address to any other address in the local CPU memory space.

The PPAGE value supplied by the instruction is part of the effective address of the CPU. For all addressing mode variations (except indexed-indirect modes) the new page value is provided by an immediate operand in the instruction. In indexed-indirect variations of the CALL instruction a pointer specifies memory locations where the new page value and the address of the called subroutine are stored. Using indirect addressing for both the new page value and the address within the page allows usage of values calculated at run time rather than immediate values that must be known at the time of assembly.

The RTC instruction terminates subroutines invoked by a CALL instruction. The RTC instruction unstacks the PPAGE value and the return address and refills the queue. Execution resumes with the next instruction after the CALL instruction.

During the execution of an RTC instruction the CPU performs the following steps:

1. Pulls the previously stored PPAGE value from the stack
2. Pulls the 16-bit return address from the stack and loads it into the PC
3. Writes the PPAGE value into the PPAGE register
4. Refills the queue and resumes execution at the return address

This sequence is uninterruptable. The RTC can be executed from anywhere in the local CPU memory space.

The CALL and RTC instructions behave like JSR and RTS instruction, they however require more execution cycles. Usage of JSR/RTS instructions is therefore recommended when possible and

CALL/RTC instructions should only be used when needed. The JSR and RTS instructions can be used to access subroutines that are already present in the local CPU memory map (i.e. in the same page in the program memory page window for example). However calling a function located in a different page requires usage of the CALL instruction. The function must be terminated by the RTC instruction. Because the RTC instruction restores contents of the PPAGE register from the stack, functions terminated with the RTC instruction must be called using the CALL instruction even when the correct page is already present in the memory map. This is to make sure that the correct PPAGE value will be present on stack at the time of the RTC instruction execution.

Chapter 4
Interrupt Module (S12SINTV1)

Version Number	Revision Date	Effective Date	Author	Description of Changes
01.02	13 Sep 2007			updates for S12P family devices: - re-added XIRQ and IRQ references since this functionality is used on devices without D2D - added low voltage reset as possible source to the pin reset vector
01.03	21 Nov 2007			added clarification of “Wake-up from STOP or WAIT by XIRQ with X bit set” feature
01.04	20 May 2009			added footnote about availability of “Wake-up from STOP or WAIT by XIRQ with X bit set” feature

4.1 Introduction

The INT module decodes the priority of all system exception requests and provides the applicable vector for processing the exception to the CPU. The INT module supports:

- I bit and X bit maskable interrupt requests
- A non-maskable unimplemented op-code trap
- A non-maskable software interrupt (SWI) or background debug mode request
- Three system reset vector requests
- A spurious interrupt vector

Each of the I bit maskable interrupt requests is assigned to a fixed priority level.

4.1.1 Glossary

Table 4-2 contains terms and abbreviations used in the document.

Table 4-2. Terminology

Term	Meaning
CCR	Condition Code Register (in the CPU)
ISR	Interrupt Service Routine
MCU	Micro-Controller Unit

4.1.2 Features

- Interrupt vector base register (IVBR)
- One spurious interrupt vector (at address vector base[1] + 0x0080).

- 2–58 I bit maskable interrupt vector requests (at addresses vector base + 0x0082–0x00F2).
- I bit maskable interrupts can be nested.
- One X bit maskable interrupt vector request (at address vector base + 0x00F4).
- One non-maskable software interrupt request (SWI) or background debug mode vector request (at address vector base + 0x00F6).
- One non-maskable unimplemented op-code trap (TRAP) vector (at address vector base + 0x00F8).
- Three system reset vectors (at addresses 0xFFFA–0xFFFE).
- Determines the highest priority interrupt vector requests, drives the vector to the bus on CPU request
- Wakes up the system from stop or wait mode when an appropriate interrupt request occurs.

4.1.3 Modes of Operation

- Run mode

  This is the basic mode of operation.
- Wait mode

  In wait mode, the clock to the INT module is disabled. The INT module is however capable of waking-up the CPU from wait mode if an interrupt occurs. Please refer to Section 4.5.3, “Wake Up from Stop or Wait Mode” for details.
- Stop Mode

  In stop mode, the clock to the INT module is disabled. The INT module is however capable of waking-up the CPU from stop mode if an interrupt occurs. Please refer to Section 4.5.3, “Wake Up from Stop or Wait Mode” for details.
- Freeze mode (BDM active)

  In freeze mode (BDM active), the interrupt vector base register is overridden internally. Please refer to Section 4.3.1.1, “Interrupt Vector Base Register (IVBR)” for details.

4.1.4 Block Diagram

Figure 4-1 shows a block diagram of the INT module.

1. The vector base is a 16-bit address which is accumulated from the contents of the interrupt vector base register (IVBR, used as upper byte) and 0x00 (used as lower byte).

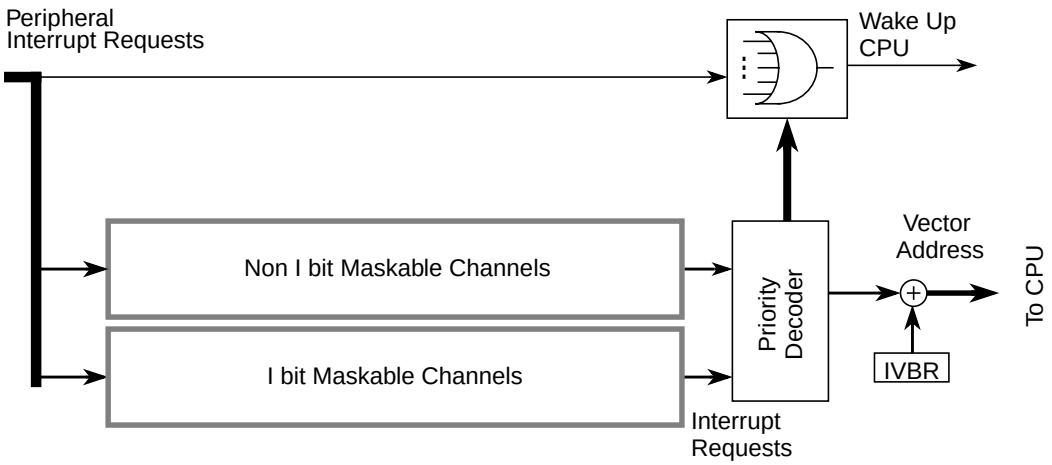

Figure 4-1. INT Block Diagram

4.2 External Signal Description

The INT module has no external signals.

4.3 Memory Map and Register Definition

This section provides a detailed description of all registers accessible in the INT module.

4.3.1 Register Descriptions

This section describes in address order all the INT registers and their individual bits.

4.3.1.1 Interrupt Vector Base Register (IVBR)

Address: 0x0120

	7	6	5	4	3	2	1	0
R W	IVB_ADDR[7:0]							
Reset	1	1	1	1	1	1	1	1

Figure 4-2. Interrupt Vector Base Register (IVBR)

Read: Anytime

Write: Anytime

Table 4-3. IVBR Field Descriptions

Field	Description
7–0 IVB_ADDR[7:0]	**Interrupt Vector Base Address Bits** — These bits represent the upper byte of all vector addresses. Out of reset these bits are set to 0xFF (that means vectors are located at 0xFF80–0xFFFE) to ensure compatibility to HCS12. **Note:** A system reset will initialize the interrupt vector base register with “0xFF” before it is used to determine the reset vector address. Therefore, changing the IVBR has no effect on the location of the three reset vectors (0xFFFA–0xFFFE). **Note:** If the BDM is active (that means the CPU is in the process of executing BDM firmware code), the contents of IVBR are ignored and the upper byte of the vector address is fixed as “0xFF”. This is done to enable handling of all non-maskable interrupts in the BDM firmware.

4.4 Functional Description

The INT module processes all exception requests to be serviced by the CPU module. These exceptions include interrupt vector requests and reset vector requests. Each of these exception types and their overall priority level is discussed in the subsections below.

4.4.1 S12S Exception Requests

The CPU handles both reset requests and interrupt requests. A priority decoder is used to evaluate the priority of pending interrupt requests.

4.4.2 Interrupt Prioritization

The INT module contains a priority decoder to determine the priority for all interrupt requests pending for the CPU. If more than one interrupt request is pending, the interrupt request with the higher vector address wins the prioritization.

The following conditions must be met for an I bit maskable interrupt request to be processed.

1. The local interrupt enabled bit in the peripheral module must be set.
2. The I bit in the condition code register (CCR) of the CPU must be cleared.
3. There is no SWI, TRAP, or X bit maskable request pending.

NOTE

All non I bit maskable interrupt requests always have higher priority than the I bit maskable interrupt requests. If the X bit in the CCR is cleared, it is possible to interrupt an I bit maskable interrupt by an X bit maskable interrupt. It is possible to nest non maskable interrupt requests, for example by nesting SWI or TRAP calls.

Since an interrupt vector is only supplied at the time when the CPU requests it, it is possible that a higher priority interrupt request could override the original interrupt request that caused the CPU to request the vector. In this case, the CPU will receive the highest priority vector and the system will process this interrupt request first, before the original interrupt request is processed.

If the interrupt source is unknown (for example, in the case where an interrupt request becomes inactive after the interrupt has been recognized, but prior to the CPU vector request), the vector address supplied to the CPU will default to that of the spurious interrupt vector.

NOTE

Care must be taken to ensure that all interrupt requests remain active until the system begins execution of the applicable service routine; otherwise, the exception request may not get processed at all or the result may be a spurious interrupt request (vector at address (vector base + 0x0080)).

4.4.3 Reset Exception Requests

The INT module supports three system reset exception request types (please refer to the Clock and Reset generator module for details):

1. Pin reset, power-on reset or illegal address reset, low voltage reset (if applicable)
2. Clock monitor reset request
3. COP watchdog reset request

4.4.4 Exception Priority

The priority (from highest to lowest) and address of all exception vectors issued by the INT module upon request by the CPU is shown in Table 4-4.

Table 4-4. Exception Vector Map and Priority

Vector Address[1]	Source
0xFFFE	Pin reset, power-on reset, illegal address reset, low voltage reset (if applicable)
0xFFFC	Clock monitor reset
0xFFFA	COP watchdog reset
(Vector base + 0x00F8)	Unimplemented opcode trap
(Vector base + 0x00F6)	Software interrupt instruction (SWI) or BDM vector request
(Vector base + 0x00F4)	X bit maskable interrupt request (XIRQ or D2D error interrupt)[2]
(Vector base + 0x00F2)	IRQ or D2D interrupt request[3]
(Vector base + 0x00F0–0x0082)	Device specific I bit maskable interrupt sources (priority determined by the low byte of the vector address, in descending order)
(Vector base + 0x0080)	Spurious interrupt

1. 16 bits vector address based
2. D2D error interrupt on MCUs featuring a D2D initiator module, otherwise XIRQ pin interrupt
3. D2D interrupt on MCUs featuring a D2D initiator module, otherwise IRQ pin interrupt

4.5 Initialization/Application Information

4.5.1 Initialization

After system reset, software should:

1. Initialize the interrupt vector base register if the interrupt vector table is not located at the default location (0xFF80–0xFFF9).
2. Enable I bit maskable interrupts by clearing the I bit in the CCR.
3. Enable the X bit maskable interrupt by clearing the X bit in the CCR.

4.5.2 Interrupt Nesting

The interrupt request scheme makes it possible to nest I bit maskable interrupt requests handled by the CPU.

- I bit maskable interrupt requests can be interrupted by an interrupt request with a higher priority.

I bit maskable interrupt requests cannot be interrupted by other I bit maskable interrupt requests per default. In order to make an interrupt service routine (ISR) interruptible, the ISR must explicitly clear the I bit in the CCR (CLI). After clearing the I bit, other I bit maskable interrupt requests can interrupt the current ISR.

An ISR of an interruptible I bit maskable interrupt request could basically look like this:

1. Service interrupt, that is clear interrupt flags, copy data, etc.
2. Clear I bit in the CCR by executing the instruction CLI (thus allowing other I bit maskable interrupt requests)
3. Process data
4. Return from interrupt by executing the instruction RTI

4.5.3 Wake Up from Stop or Wait Mode

4.5.3.1 CPU Wake Up from Stop or Wait Mode

Every I bit maskable interrupt request is capable of waking the MCU from stop or wait mode. To determine whether an I bit maskable interrupts is qualified to wake-up the CPU or not, the same conditions as in normal run mode are applied during stop or wait mode:

- If the I bit in the CCR is set, all I bit maskable interrupts are masked from waking-up the MCU.

Since there are no clocks running in stop mode, only interrupts which can be asserted asynchronously can wake-up the MCU from stop mode.

The X bit maskable interrupt request can wake up the MCU from stop or wait mode at anytime, even if the X bit in CCR is set[1].

1. The capability of the $\overline{\text{XIRQ}}$ pin to wake-up the MCU with the X bit set may not be available if, for example, the $\overline{\text{XIRQ}}$ pin is shared with other peripheral modules on the device. Please refer to the Device section of the MCU reference manual for details.

If the X bit maskable interrupt request is used to wake-up the MCU with the X bit in the CCR set, the associated ISR is not called. The CPU then resumes program execution with the instruction following the WAI or STOP instruction. This features works following the same rules like any interrupt request, that is care must be taken that the X interrupt request used for wake-up remains active at least until the system begins execution of the instruction following the WAI or STOP instruction; otherwise, wake-up may not occur.

Chapter 5
Background Debug Module (S12SBDMV1)

Revision History

Revision Number	Date		Summary of Changes
s12s_bdm.01.00.00	08.Feb.2006	General	First version of S12SBDMV1
s12s_bdm.01.00.02	09.Feb.2006	General	Updated register address information & Block Version
s12s_bdm.01.00.12	10.May.2006	5.3.2/5-134	Removed CLKSW bit and description
s12s_bdm.01.01.01	20.Sep.2007	General	Added conditional text for S12P family
1.02	08.Apr.2009	General	Minor text corrections following review
1.03	14.May.2009		Internal Conditional text only
1.04	30.Nov.2009		Internal Conditional text only

5.1 Introduction

This section describes the functionality of the background debug module (BDM) sub-block of the HCS12S core platform.

The background debug module (BDM) sub-block is a single-wire, background debug system implemented in on-chip hardware for minimal CPU intervention. All interfacing with the BDM is done via the BKGD pin.

The BDM has enhanced capability for maintaining synchronization between the target and host while allowing more flexibility in clock rates. This includes a sync signal to determine the communication rate and a handshake signal to indicate when an operation is complete. The system is backwards compatible to the BDM of the S12 family with the following exceptions:

- TAGGO command not supported by S12SBDM
- External instruction tagging feature is part of the DBG module
- S12SBDM register map and register content modified
- Family ID readable from BDM ROM at global address 0x3_FF0F in active BDM (value for devices with HCS12S core is 0xC2)
- Clock switch removed from BDM (CLKSW bit removed from BDMSTS register)

5.1.1 Features

The BDM includes these distinctive features:

- Single-wire communication with host development system
- Enhanced capability for allowing more flexibility in clock rates
- SYNC command to determine communication rate
- GO_UNTIL command
- Hardware handshake protocol to increase the performance of the serial communication
- Active out of reset in special single chip mode
- Nine hardware commands using free cycles, if available, for minimal CPU intervention
- Hardware commands not requiring active BDM
- 14 firmware commands execute from the standard BDM firmware lookup table
- Software control of BDM operation during wait mode
- When secured, hardware commands are allowed to access the register space in special single chip mode, if the Flash erase tests fail.
- Family ID readable from BDM ROM at global address 0x3_FF0F in active BDM (value for devices with HCS12S core is 0xC2)
- BDM hardware commands are operational until system stop mode is entered

5.1.2 Modes of Operation

BDM is available in all operating modes but must be enabled before firmware commands are executed. Some systems may have a control bit that allows suspending the function during background debug mode.

5.1.2.1 Regular Run Modes

All of these operations refer to the part in run mode and not being secured. The BDM does not provide controls to conserve power during run mode.

- Normal modes

  General operation of the BDM is available and operates the same in all normal modes.
- Special single chip mode

  In special single chip mode, background operation is enabled and active out of reset. This allows programming a system with blank memory.

5.1.2.2 Secure Mode Operation

If the device is in secure mode, the operation of the BDM is reduced to a small subset of its regular run mode operation. Secure operation prevents access to Flash other than allowing erasure. For more information please see Section 5.4.1, “Security”.

5.1.2.3 Low-Power Modes

The BDM can be used until stop mode is entered. When CPU is in wait mode all BDM firmware commands as well as the hardware BACKGROUND command cannot be used and are ignored. In this case the CPU can not enter BDM active mode, and only hardware read and write commands are available. Also the CPU can not enter a low power mode (stop or wait) during BDM active mode.

In stop mode the BDM clocks are stopped. When BDM clocks are disabled and stop mode is exited, the BDM clocks will restart and BDM will have a soft reset (clearing the instruction register, any command in progress and disable the ACK function). The BDM is now ready to receive a new command.

5.1.3 Block Diagram

A block diagram of the BDM is shown in Figure 5-1.

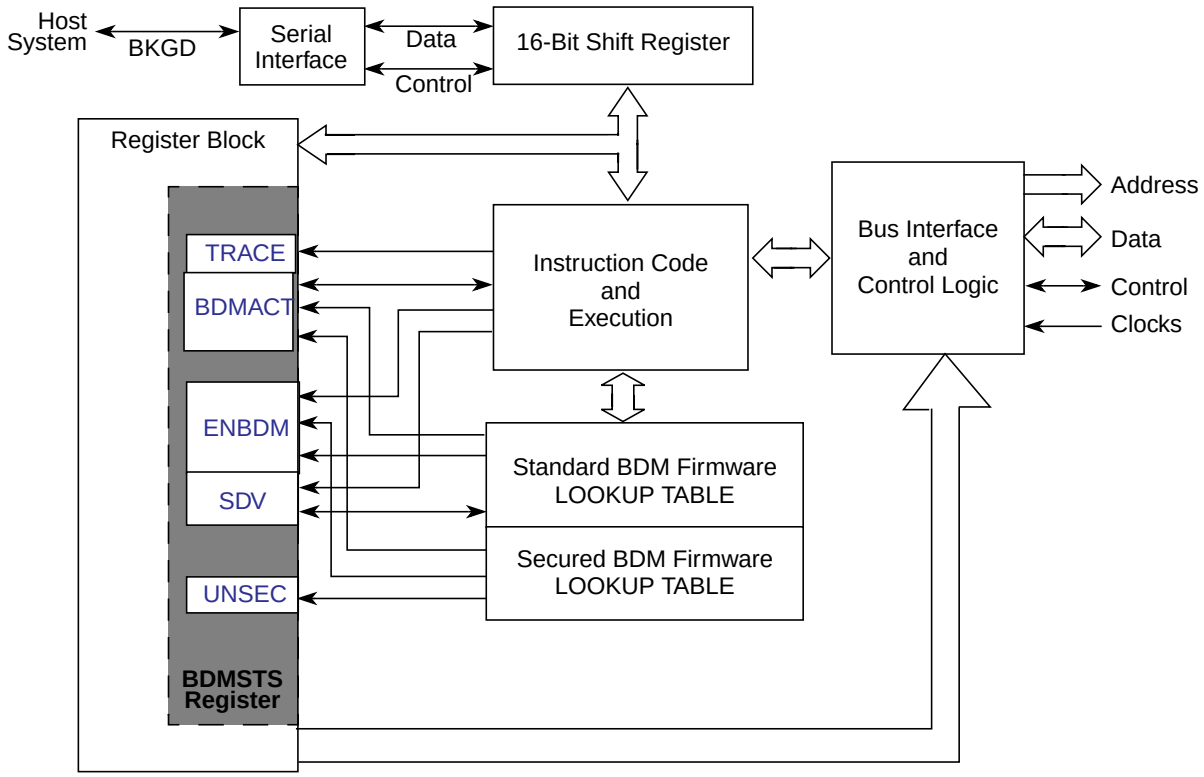

Figure 5-1. BDM Block Diagram

5.2 External Signal Description

A single-wire interface pin called the background debug interface (BKGD) pin is used to communicate with the BDM system. During reset, this pin is a mode select input which selects between normal and special modes of operation. After reset, this pin becomes the dedicated serial interface pin for the background debug mode. The communication rate of this pin is based on the settings for the VCO clock (CPMUSYNR). The BDM clock frequency is always VCO clock frequency divided by 8. After reset the BDM clock is based on the reset values of the CPMUSYNR register (4 MHz). When modifying the VCO

clock please make sure that the communication rate is adapted accordingly and a communication time-out (BDM soft reset) has occurred.

5.3 Memory Map and Register Definition

5.3.1 Module Memory Map

Table 5-1 shows the BDM memory map when BDM is active.

Table 5-1. BDM Memory Map

Global Address	Module	Size (Bytes)
0x3_FF00–0x3_FF0B	BDM registers	12
0x3_FF0C–0x3_FF0E	BDM firmware ROM	3
0x3_FF0F	Family ID (part of BDM firmware ROM)	1
0x3_FF10–0x3_FFFF	BDM firmware ROM	240

5.3.2 Register Descriptions

A summary of the registers associated with the BDM is shown in Figure 5-2. Registers are accessed by host-driven communications to the BDM hardware using READ_BD and WRITE_BD commands.

Global Address	Register Name		Bit 7	6	5	4	3	2	1	Bit 0
0x3_FF00	Reserved	R	X	X	X	X	X	X	0	0
		W								
0x3_FF01	BDMSTS	R	ENBDM	BDMACT	0	SDV	TRACE	0	UNSEC	0
		W								
0x3_FF02	Reserved	R	X	X	X	X	X	X	X	X
		W								
0x3_FF03	Reserved	R	X	X	X	X	X	X	X	X
		W								
0x3_FF04	Reserved	R	X	X	X	X	X	X	X	X
		W								

= Unimplemented, Reserved

= Implemented (do not alter)

X = Indeterminate

0 = Always read zero

Figure 5-2. BDM Register Summary

Global Address	Register Name		Bit 7	6	5	4	3	2	1	Bit 0
0x3_FF05	Reserved	R	X	X	X	X	X	X	X	X
		W								
0x3_FF06	BDMCCR	R	CCR7	CCR6	CCR5	CCR4	CCR3	CCR2	CCR1	CCR0
		W								
0x3_FF07	Reserved	R	0	0	0	0	0	0	0	0
		W								
0x3_FF08	BDMPPR	R	BPAE	0	0	0	BPP3	BPP2	BPP1	BPP0
		W								
0x3_FF09	Reserved	R	0	0	0	0	0	0	0	0
		W								
0x3_FF0A	Reserved	R	0	0	0	0	0	0	0	0
		W								
0x3_FF0B	Reserved	R	0	0	0	0	0	0	0	0
		W								

= Unimplemented, Reserved

= Implemented (do not alter)

X = Indeterminate

0 = Always read zero

Figure 5-2. BDM Register Summary (continued)

5.3.2.1 BDM Status Register (BDMSTS)

Register Global Address 0x3_FF01

	7	6	5	4	3	2	1	0
R	ENBDM	BDMACT	0	SDV	TRACE	0	UNSEC	0
W								
Reset								
Special Single-Chip Mode	0(1)	1	0	0	0	0	0(2)	0
All Other Modes	0	0	0	0	0	0	0	0

= Unimplemented, Reserved

= Implemented (do not alter)

0 = Always read zero

1. ENBDM is read as 1 by a debugging environment in special single chip mode when the device is not secured or secured but fully erased (Flash). This is because the ENBDM bit is set by the standard BDM firmware before a BDM command can be fully transmitted and executed.
2. UNSEC is read as 1 by a debugging environment in special single chip mode when the device is secured and fully erased, else it is 0 and can only be read if not secure (see also bit description).

Figure 5-3. BDM Status Register (BDMSTS)

Read: All modes through BDM operation when not secured

Write: All modes through BDM operation when not secured, but subject to the following:

— ENBDM should only be set via a BDM hardware command if the BDM firmware commands are needed. (This does not apply in special single chip mode).

— BDMACT can only be set by BDM hardware upon entry into BDM. It can only be cleared by the standard BDM firmware lookup table upon exit from BDM active mode.

— All other bits, while writable via BDM hardware or standard BDM firmware write commands, should only be altered by the BDM hardware or standard firmware lookup table as part of BDM command execution.

Table 5-2. BDMSTS Field Descriptions

Field	Description
7 ENBDM	**Enable BDM** — This bit controls whether the BDM is enabled or disabled. When enabled, BDM can be made active to allow firmware commands to be executed. When disabled, BDM cannot be made active but BDM hardware commands are still allowed. 0 BDM disabled 1 BDM enabled **Note:** ENBDM is set out of reset in special single chip mode. In special single chip mode with the device secured, this bit will not be set until after the Flash erase verify tests are complete.
6 BDMACT	**BDM Active Status** — This bit becomes set upon entering BDM. The standard BDM firmware lookup table is then enabled and put into the memory map. BDMACT is cleared by a carefully timed store instruction in the standard BDM firmware as part of the exit sequence to return to user code and remove the BDM memory from the map. 0 BDM not active 1 BDM active
4 SDV	**Shift Data Valid** — This bit is set and cleared by the BDM hardware. It is set after data has been transmitted as part of a BDM firmware or hardware read command or after data has been received as part of a BDM firmware or hardware write command. It is cleared when the next BDM command has been received or BDM is exited. SDV is used by the standard BDM firmware to control program flow execution. 0 Data phase of command not complete 1 Data phase of command is complete
3 TRACE	**TRACE1 BDM Firmware Command is Being Executed** — This bit gets set when a BDM TRACE1 firmware command is first recognized. It will stay set until BDM firmware is exited by one of the following BDM commands: GO or GO_UNTIL. 0 TRACE1 command is not being executed 1 TRACE1 command is being executed
1 UNSEC	**Unsecure** — If the device is secured this bit is only writable in special single chip mode from the BDM secure firmware. It is in a zero state as secure mode is entered so that the secure BDM firmware lookup table is enabled and put into the memory map overlapping the standard BDM firmware lookup table. The secure BDM firmware lookup table verifies that the on-chip Flash is erased. This being the case, the UNSEC bit is set and the BDM program jumps to the start of the standard BDM firmware lookup table and the secure BDM firmware lookup table is turned off. If the erase test fails, the UNSEC bit will not be asserted. 0 System is in a secured mode. 1 System is in a unsecured mode. **Note:** When UNSEC is set, security is off and the user can change the state of the secure bits in the on-chip Flash EEPROM. Note that if the user does not change the state of the bits to “unsecured” mode, the system will be secured again when it is next taken out of reset.After reset this bit has no meaning or effect when the security byte in the Flash EEPROM is configured for unsecure mode.

Register Global Address 0x3_FF06

	7	6	5	4	3	2	1	0
R W	CCR7	CCR6	CCR5	CCR4	CCR3	CCR2	CCR1	CCR0
Reset								
Special Single-Chip Mode	1	1	0	0	1	0	0	0
All Other Modes	0	0	0	0	0	0	0	0

Figure 5-4. BDM CCR Holding Register (BDMCCR)

Read: All modes through BDM operation when not secured

Write: All modes through BDM operation when not secured

NOTE

When BDM is made active, the CPU stores the content of its CCR register in the BDMCCR register. However, out of special single-chip reset, the BDMCCR is set to 0xD8 and not 0xD0 which is the reset value of the CCR register in this CPU mode. Out of reset in all other modes the BDMCCR register is read zero.

When entering background debug mode, the BDM CCR holding register is used to save the condition code register of the user's program. It is also used for temporary storage in the standard BDM firmware mode. The BDM CCR holding register can be written to modify the CCR value.

5.3.2.2 BDM Program Page Index Register (BDMPPR)

Register Global Address 0x3_FF08

	7	6	5	4	3	2	1	0
R	BPAE	0	0	0	BPP3	BPP2	BPP1	BPP0
W								
Reset	0	0	0	0	0	0	0	0

= Unimplemented, Reserved

Figure 5-5. BDM Program Page Register (BDMPPR)

Read: All modes through BDM operation when not secured

Write: All modes through BDM operation when not secured

Table 5-3. BDMPPR Field Descriptions

Field	Description
7 BPAE	**BDM Program Page Access Enable Bit** — BPAE enables program page access for BDM hardware and firmware read/write instructions The BDM hardware commands used to access the BDM registers (READ_BD and WRITE_BD) can not be used for global accesses even if the BGAE bit is set. 0 BDM Program Paging disabled 1 BDM Program Paging enabled
3–0 BPP[3:0]	**BDM Program Page Index Bits 3–0** — These bits define the selected program page. For more detailed information regarding the program page window scheme, please refer to the S12S_MMC Block Guide.

5.3.3 Family ID Assignment

The family ID is an 8-bit value located in the BDM ROM in active BDM (at global address: 0x3_FF0F). The read-only value is a unique family ID which is 0xC2 for devices with an HCS12S core.

5.4 Functional Description

The BDM receives and executes commands from a host via a single wire serial interface. There are two types of BDM commands: hardware and firmware commands.

Hardware commands are used to read and write target system memory locations and to enter active background debug mode, see Section 5.4.3, “BDM Hardware Commands”. Target system memory includes all memory that is accessible by the CPU.

Firmware commands are used to read and write CPU resources and to exit from active background debug mode, see Section 5.4.4, “Standard BDM Firmware Commands”. The CPU resources referred to are the accumulator (D), X index register (X), Y index register (Y), stack pointer (SP), and program counter (PC).

Hardware commands can be executed at any time and in any mode excluding a few exceptions as highlighted (see Section 5.4.3, “BDM Hardware Commands”) and in secure mode (see Section 5.4.1, “Security”). BDM firmware commands can only be executed when the system is not secure and is in active background debug mode (BDM).

5.4.1 Security

If the user resets into special single chip mode with the system secured, a secured mode BDM firmware lookup table is brought into the map overlapping a portion of the standard BDM firmware lookup table. The secure BDM firmware verifies that the on-chip Flash EEPROM are erased. This being the case, the UNSEC and ENBDM bit will get set. The BDM program jumps to the start of the standard BDM firmware and the secured mode BDM firmware is turned off and all BDM commands are allowed. If the Flash does not verify as erased, the BDM firmware sets the ENBDM bit, without asserting UNSEC, and the firmware enters a loop. This causes the BDM hardware commands to become enabled, but does not enable the firmware commands. This allows the BDM hardware to be used to erase the Flash.

BDM operation is not possible in any other mode than special single chip mode when the device is secured. The device can only be unsecured via BDM serial interface in special single chip mode. For more information regarding security, please see the S12S_9SEC Block Guide.

5.4.2 Enabling and Activating BDM

The system must be in active BDM to execute standard BDM firmware commands. BDM can be activated only after being enabled. BDM is enabled by setting the ENBDM bit in the BDM status (BDMSTS) register. The ENBDM bit is set by writing to the BDM status (BDMSTS) register, via the single-wire interface, using a hardware command such as WRITE_BD_BYTE.

After being enabled, BDM is activated by one of the following[1]:

- Hardware BACKGROUND command

1. BDM is enabled and active immediately out of special single-chip reset.

- CPU BGND instruction
- Breakpoint force or tag mechanism[1]

When BDM is activated, the CPU finishes executing the current instruction and then begins executing the firmware in the standard BDM firmware lookup table. When BDM is activated by a breakpoint, the type of breakpoint used determines if BDM becomes active before or after execution of the next instruction.

NOTE

If an attempt is made to activate BDM before being enabled, the CPU resumes normal instruction execution after a brief delay. If BDM is not enabled, any hardware BACKGROUND commands issued are ignored by the BDM and the CPU is not delayed.

In active BDM, the BDM registers and standard BDM firmware lookup table are mapped to addresses 0x3_FF00 to 0x3_FFFF. BDM registers are mapped to addresses 0x3_FF00 to 0x3_FF0B. The BDM uses these registers which are readable anytime by the BDM. However, these registers are not readable by user programs.

When BDM is activated while CPU executes code overlapping with BDM firmware space the saved program counter (PC) will be auto incremented by one from the BDM firmware, no matter what caused the entry into BDM active mode (BGND instruction, BACKGROUND command or breakpoints). In such a case the PC must be set to the next valid address via a WRITE_PC command before executing the GO command.

5.4.3 BDM Hardware Commands

Hardware commands are used to read and write target system memory locations and to enter active background debug mode. Target system memory includes all memory that is accessible by the CPU such as on-chip RAM, Flash, I/O and control registers.

Hardware commands are executed with minimal or no CPU intervention and do not require the system to be in active BDM for execution, although, they can still be executed in this mode. When executing a hardware command, the BDM sub-block waits for a free bus cycle so that the background access does not disturb the running application program. If a free cycle is not found within 128 clock cycles, the CPU is momentarily frozen so that the BDM can steal a cycle. When the BDM finds a free cycle, the operation does not intrude on normal CPU operation provided that it can be completed in a single cycle. However, if an operation requires multiple cycles the CPU is frozen until the operation is complete, even though the BDM found a free cycle.

The BDM hardware commands are listed in Table 5-4.

The READ_BD and WRITE_BD commands allow access to the BDM register locations. These locations are not normally in the system memory map but share addresses with the application in memory. To distinguish between physical memory locations that share the same address, BDM memory resources are

1. This method is provided by the S12S_DBG module.

enabled just for the READ_BD and WRITE_BD access cycle. This allows the BDM to access BDM locations unobtrusively, even if the addresses conflict with the application memory map.

Table 5-4. Hardware Commands

Command	Opcode (hex)	Data	Description
BACKGROUND	90	None	Enter background mode if BDM is enabled. If enabled, an ACK will be issued when the part enters active background mode.
ACK_ENABLE	D5	None	Enable Handshake. Issues an ACK pulse after the command is executed.
ACK_DISABLE	D6	None	Disable Handshake. This command does not issue an ACK pulse.
READ_BD_BYTE	E4	16-bit address 16-bit data out	Read from memory with standard BDM firmware lookup table in map. Odd address data on low byte; even address data on high byte.
READ_BD_WORD	EC	16-bit address 16-bit data out	Read from memory with standard BDM firmware lookup table in map. Must be aligned access.
READ_BYTE	E0	16-bit address 16-bit data out	Read from memory with standard BDM firmware lookup table out of map. Odd address data on low byte; even address data on high byte.
READ_WORD	E8	16-bit address 16-bit data out	Read from memory with standard BDM firmware lookup table out of map. Must be aligned access.
WRITE_BD_BYTE	C4	16-bit address 16-bit data in	Write to memory with standard BDM firmware lookup table in map. Odd address data on low byte; even address data on high byte.
WRITE_BD_WORD	CC	16-bit address 16-bit data in	Write to memory with standard BDM firmware lookup table in map. Must be aligned access.
WRITE_BYTE	C0	16-bit address 16-bit data in	Write to memory with standard BDM firmware lookup table out of map. Odd address data on low byte; even address data on high byte.
WRITE_WORD	C8	16-bit address 16-bit data in	Write to memory with standard BDM firmware lookup table out of map. Must be aligned access.

NOTE:
If enabled, ACK will occur when data is ready for transmission for all BDM READ commands and will occur after the write is complete for all BDM WRITE commands.

5.4.4 Standard BDM Firmware Commands

BDM firmware commands are used to access and manipulate CPU resources. The system must be in active BDM to execute standard BDM firmware commands, see Section 5.4.2, “Enabling and Activating BDM”. Normal instruction execution is suspended while the CPU executes the firmware located in the standard BDM firmware lookup table. The hardware command BACKGROUND is the usual way to activate BDM.

As the system enters active BDM, the standard BDM firmware lookup table and BDM registers become visible in the on-chip memory map at 0x3_FF00–0x3_FFFF, and the CPU begins executing the standard BDM firmware. The standard BDM firmware watches for serial commands and executes them as they are received.

The firmware commands are shown in Table 5-5.

Table 5-5. Firmware Commands

Command[1]	Opcode (hex)	Data	Description
READ_NEXT[2]	62	16-bit data out	Increment X index register by 2 (X = X + 2), then read word X points to.
READ_PC	63	16-bit data out	Read program counter.
READ_D	64	16-bit data out	Read D accumulator.
READ_X	65	16-bit data out	Read X index register.
READ_Y	66	16-bit data out	Read Y index register.
READ_SP	67	16-bit data out	Read stack pointer.
WRITE_NEXT	42	16-bit data in	Increment X index register by 2 (X = X + 2), then write word to location pointed to by X.
WRITE_PC	43	16-bit data in	Write program counter.
WRITE_D	44	16-bit data in	Write D accumulator.
WRITE_X	45	16-bit data in	Write X index register.
WRITE_Y	46	16-bit data in	Write Y index register.
WRITE_SP	47	16-bit data in	Write stack pointer.
GO	08	none	Go to user program. If enabled, ACK will occur when leaving active background mode.
GO_UNTIL[3]	0C	none	Go to user program. If enabled, ACK will occur upon returning to active background mode.
TRACE1	10	none	Execute one user instruction then return to active BDM. If enabled, ACK will occur upon returning to active background mode.
TAGGO -> GO	18	none	(Previous enable tagging and go to user program.) This command will be deprecated and should not be used anymore. Opcode will be executed as a GO command.

1. If enabled, ACK will occur when data is ready for transmission for all BDM READ commands and will occur after the write is complete for all BDM WRITE commands.
2. When the firmware command READ_NEXT or WRITE_NEXT is used to access the BDM address space the BDM resources are accessed rather than user code. Writing BDM firmware is not possible.
3. System stop disables the ACK function and ignored commands will not have an ACK-pulse (e.g., CPU in stop or wait mode). The GO_UNTIL command will not get an Acknowledge if CPU executes the wait or stop instruction before the “UNTIL” condition (BDM active again) is reached (see Section 5.4.7, “Serial Interface Hardware Handshake Protocol” last note).

5.4.5 BDM Command Structure

Hardware and firmware BDM commands start with an 8-bit opcode followed by a 16-bit address and/or a 16-bit data word, depending on the command. All the read commands return 16 bits of data despite the byte or word implication in the command name.

8-bit reads return 16-bits of data, only one byte of which contains valid data. If reading an even address, the valid data will appear in the MSB. If reading an odd address, the valid data will appear in the LSB.

16-bit misaligned reads and writes are generally not allowed. If attempted by BDM hardware command, the BDM ignores the least significant bit of the address and assumes an even address from the remaining bits.

For hardware data read commands, the external host must wait at least 150 bus clock cycles after sending the address before attempting to obtain the read data. This is to be certain that valid data is available in the BDM shift register, ready to be shifted out. For hardware write commands, the external host must wait 150 bus clock cycles after sending the data to be written before attempting to send a new command. This is to avoid disturbing the BDM shift register before the write has been completed. The 150 bus clock cycle delay in both cases includes the maximum 128 cycle delay that can be incurred as the BDM waits for a free cycle before stealing a cycle.

For BDM firmware read commands, the external host should wait at least 48 bus clock cycles after sending the command opcode and before attempting to obtain the read data. The 48 cycle wait allows enough time for the requested data to be made available in the BDM shift register, ready to be shifted out.

For BDM firmware write commands, the external host must wait 36 bus clock cycles after sending the data to be written before attempting to send a new command. This is to avoid disturbing the BDM shift register before the write has been completed.

The external host should wait for at least for 76 bus clock cycles after a TRACE1 or GO command before starting any new serial command. This is to allow the CPU to exit gracefully from the standard BDM firmware lookup table and resume execution of the user code. Disturbing the BDM shift register prematurely may adversely affect the exit from the standard BDM firmware lookup table.

NOTE

If the bus rate of the target processor is unknown or could be changing, it is recommended that the ACK (acknowledge function) is used to indicate when an operation is complete. When using ACK, the delay times are automated.

Figure 5-6 represents the BDM command structure. The command blocks illustrate a series of eight bit times starting with a falling edge. The bar across the top of the blocks indicates that the BKGD line idles in the high state. The time for an 8-bit command is 8×16 target clock cycles.[1]

1. Target clock cycles are cycles measured using the target MCU's serial clock rate. See Section 5.4.6, "BDM Serial Interface" and Section 5.3.2.1, "BDM Status Register (BDMSTS)" for information on how serial clock rate is selected.

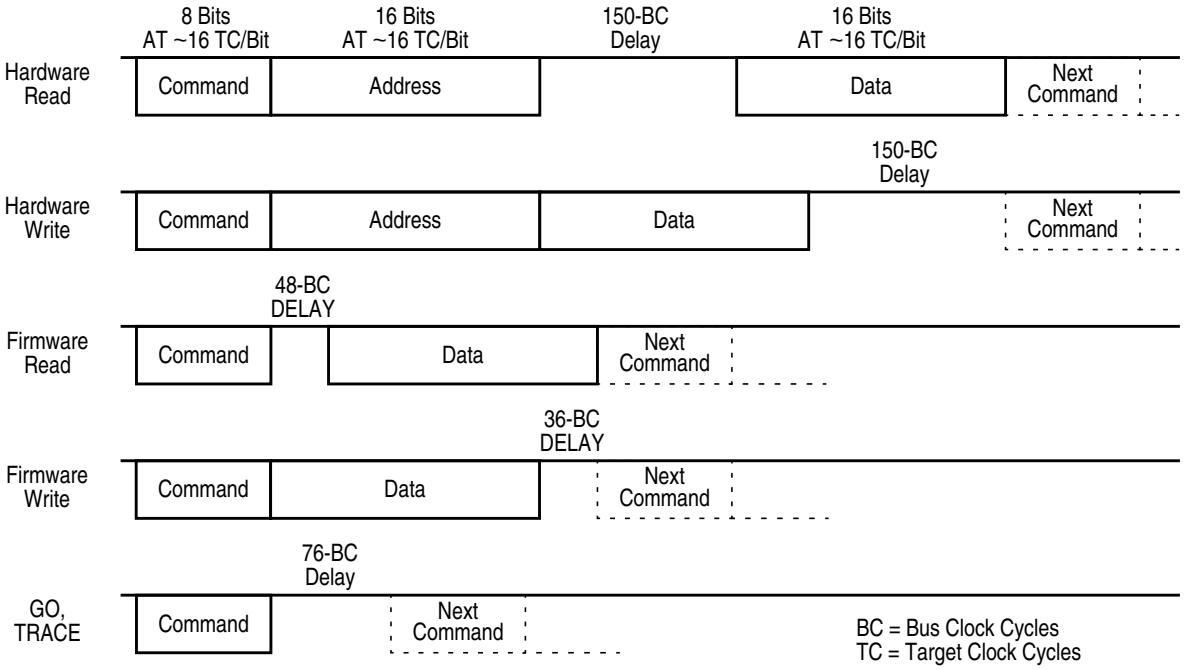

Figure 5-6. BDM Command Structure

5.4.6 BDM Serial Interface

The BDM communicates with external devices serially via the BKGD pin. During reset, this pin is a mode select input which selects between normal and special modes of operation. After reset, this pin becomes the dedicated serial interface pin for the BDM.

The BDM serial interface is timed based on the VCO clock (please refer to the CPMU Block Guide for more details), which gets divided by 8. This clock will be referred to as the target clock in the following explanation.

The BDM serial interface uses a clocking scheme in which the external host generates a falling edge on the BKGD pin to indicate the start of each bit time. This falling edge is sent for every bit whether data is transmitted or received. Data is transferred most significant bit (MSB) first at 16 target clock cycles per bit. The interface times out if 512 clock cycles occur between falling edges from the host.

The BKGD pin is a pseudo open-drain pin and has an weak on-chip active pull-up that is enabled at all times. It is assumed that there is an external pull-up and that drivers connected to BKGD do not typically drive the high level. Since R-C rise time could be unacceptably long, the target system and host provide brief driven-high (speedup) pulses to drive BKGD to a logic 1. The source of this speedup pulse is the host for transmit cases and the target for receive cases.

The timing for host-to-target is shown in Figure 5-7 and that of target-to-host in Figure 5-8 and Figure 5-9. All four cases begin when the host drives the BKGD pin low to generate a falling edge. Since the host and target are operating from separate clocks, it can take the target system up to one full clock cycle to recognize this edge. The target measures delays from this perceived start of the bit time while the host measures delays from the point it actually drove BKGD low to start the bit up to one target clock cycle

earlier. Synchronization between the host and target is established in this manner at the start of every bit time.

Figure 5-7 shows an external host transmitting a logic 1 and transmitting a logic 0 to the BKGD pin of a target system. The host is asynchronous to the target, so there is up to a one clock-cycle delay from the host-generated falling edge to where the target recognizes this edge as the beginning of the bit time. Ten target clock cycles later, the target senses the bit level on the BKGD pin. Internal glitch detect logic requires the pin be driven high no later that eight target clock cycles after the falling edge for a logic 1 transmission.

Since the host drives the high speedup pulses in these two cases, the rising edges look like digitally driven signals.

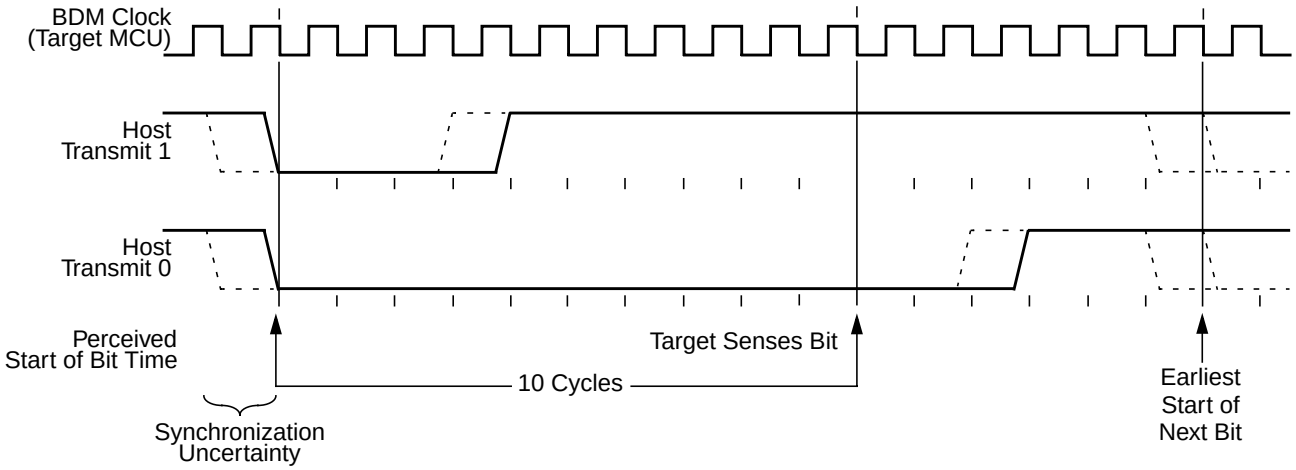

Figure 5-7. BDM Host-to-Target Serial Bit Timing

The receive cases are more complicated. Figure 5-8 shows the host receiving a logic 1 from the target system. Since the host is asynchronous to the target, there is up to one clock-cycle delay from the host-generated falling edge on BKGD to the perceived start of the bit time in the target. The host holds the BKGD pin low long enough for the target to recognize it (at least two target clock cycles). The host must release the low drive before the target drives a brief high speedup pulse seven target clock cycles after the perceived start of the bit time. The host should sample the bit level about 10 target clock cycles after it started the bit time.

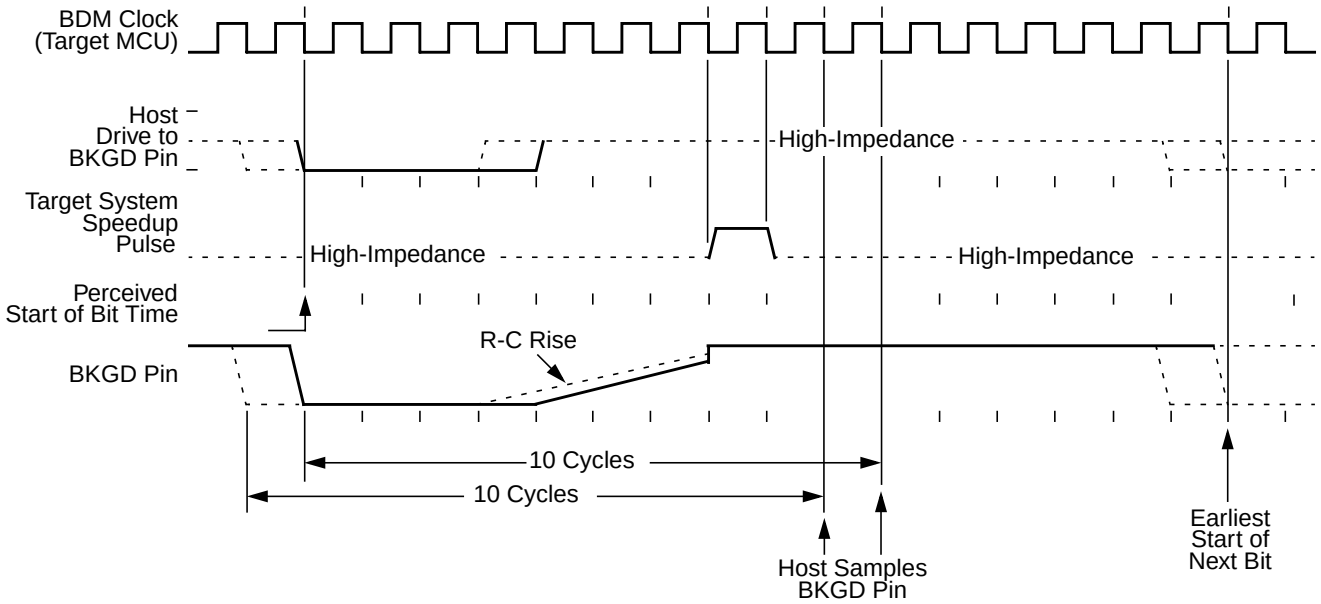

Figure 5-8. BDM Target-to-Host Serial Bit Timing (Logic 1)

Figure 5-9 shows the host receiving a logic 0 from the target. Since the host is asynchronous to the target, there is up to a one clock-cycle delay from the host-generated falling edge on BKGD to the start of the bit time as perceived by the target. The host initiates the bit time but the target finishes it. Since the target wants the host to receive a logic 0, it drives the BKGD pin low for 13 target clock cycles then briefly drives it high to speed up the rising edge. The host samples the bit level about 10 target clock cycles after starting the bit time.

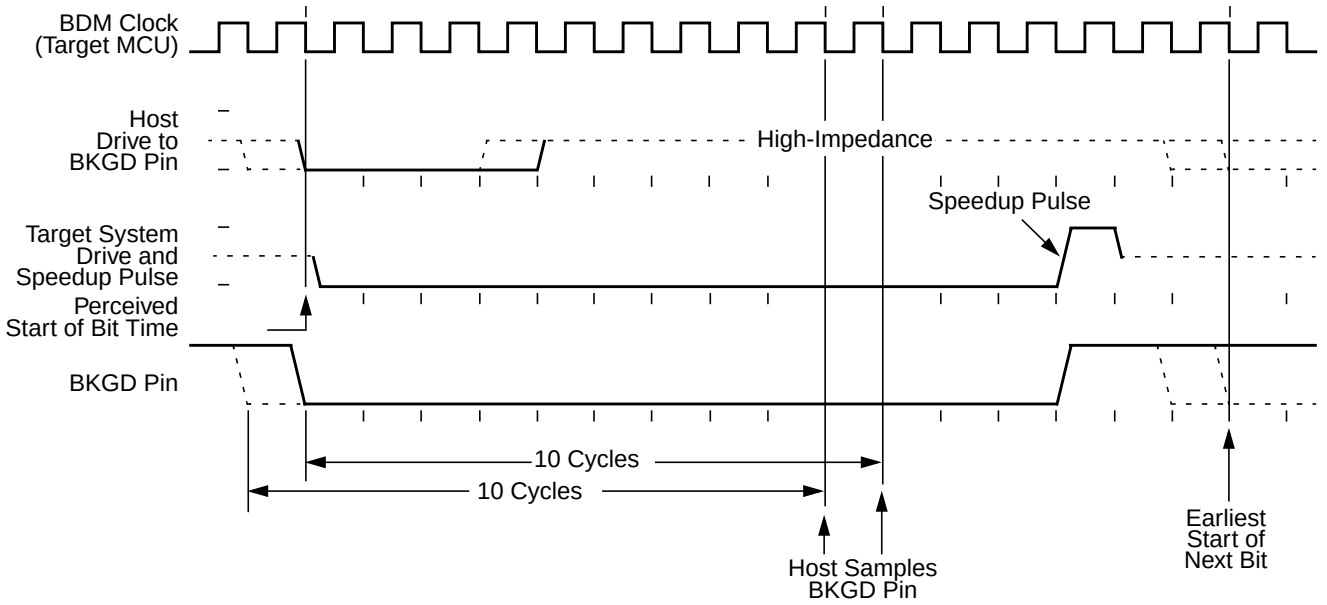

Figure 5-9. BDM Target-to-Host Serial Bit Timing (Logic 0)

5.4.7 Serial Interface Hardware Handshake Protocol

BDM commands that require CPU execution are ultimately treated at the MCU bus rate. Since the BDM clock source can be modified when changing the settings for the VCO frequency (CPMUSYNR), it is very helpful to provide a handshake protocol in which the host could determine when an issued command is executed by the CPU. The BDM clock frequency is always VCO frequency divided by 8. The alternative is to always wait the amount of time equal to the appropriate number of cycles at the slowest possible rate the clock could be running. This sub-section will describe the hardware handshake protocol.

The hardware handshake protocol signals to the host controller when an issued command was successfully executed by the target. This protocol is implemented by a 16 serial clock cycle low pulse followed by a brief speedup pulse in the BKGD pin. This pulse is generated by the target MCU when a command, issued by the host, has been successfully executed (see Figure 5-10). This pulse is referred to as the ACK pulse. After the ACK pulse has finished: the host can start the bit retrieval if the last issued command was a read command, or start a new command if the last command was a write command or a control command (BACKGROUND, GO, GO_UNTIL or TRACE1). The ACK pulse is not issued earlier than 32 serial clock cycles after the BDM command was issued. The end of the BDM command is assumed to be the 16th tick of the last bit. This minimum delay assures enough time for the host to perceive the ACK pulse. Note also that, there is no upper limit for the delay between the command and the related ACK pulse, since the command execution depends upon the CPU bus, which in some cases could be very slow due to long accesses taking place.This protocol allows a great flexibility for the POD designers, since it does not rely on any accurate time measurement or short response time to any event in the serial communication.

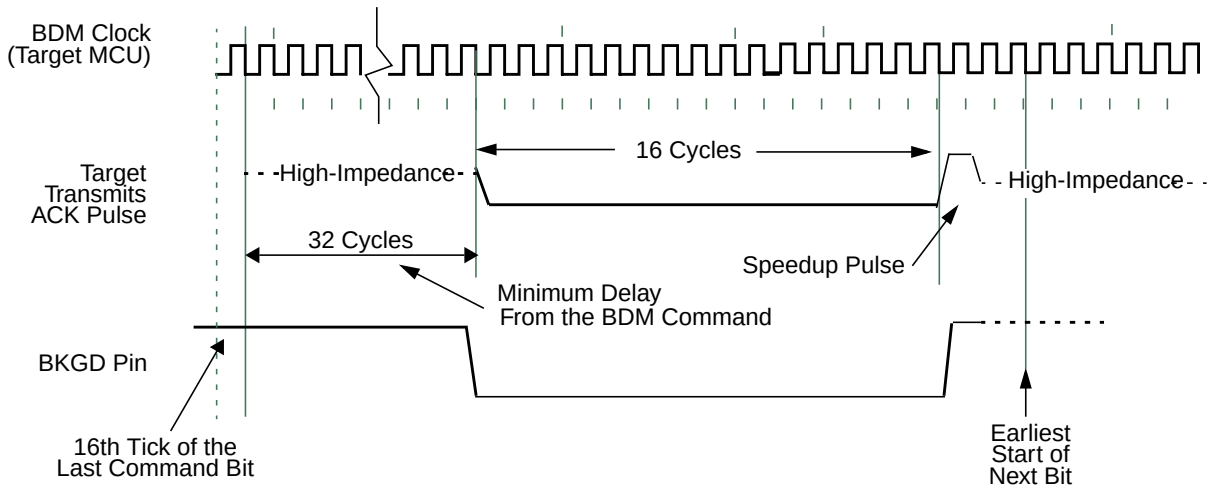

Figure 5-10. Target Acknowledge Pulse (ACK)

NOTE

If the ACK pulse was issued by the target, the host assumes the previous command was executed. If the CPU enters wait or stop prior to executing a hardware command, the ACK pulse will not be issued meaning that the BDM command was not executed. After entering wait or stop mode, the BDM command is no longer pending.

Figure 5-11 shows the ACK handshake protocol in a command level timing diagram. The READ_BYTE instruction is used as an example. First, the 8-bit instruction opcode is sent by the host, followed by the address of the memory location to be read. The target BDM decodes the instruction. A bus cycle is grabbed (free or stolen) by the BDM and it executes the READ_BYTE operation. Having retrieved the data, the BDM issues an ACK pulse to the host controller, indicating that the addressed byte is ready to be retrieved. After detecting the ACK pulse, the host initiates the byte retrieval process. Note that data is sent in the form of a word and the host needs to determine which is the appropriate byte based on whether the address was odd or even.

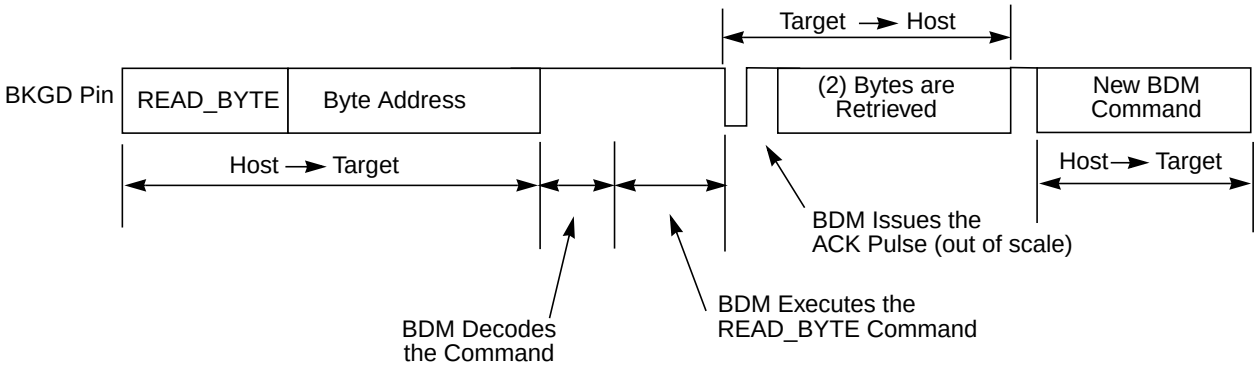

Figure 5-11. Handshake Protocol at Command Level

Differently from the normal bit transfer (where the host initiates the transmission), the serial interface ACK handshake pulse is initiated by the target MCU by issuing a negative edge in the BKGD pin. The hardware handshake protocol in Figure 5-10 specifies the timing when the BKGD pin is being driven, so the host should follow this timing constraint in order to avoid the risk of an electrical conflict in the BKGD pin.

NOTE

The only place the BKGD pin can have an electrical conflict is when one side is driving low and the other side is issuing a speedup pulse (high). Other "highs" are pulled rather than driven. However, at low rates the time of the speedup pulse can become lengthy and so the potential conflict time becomes longer as well.

The ACK handshake protocol does not support nested ACK pulses. If a BDM command is not acknowledge by an ACK pulse, the host needs to abort the pending command first in order to be able to issue a new BDM command. When the CPU enters wait or stop while the host issues a hardware command (e.g., WRITE_BYTE), the target discards the incoming command due to the wait or stop being detected. Therefore, the command is not acknowledged by the target, which means that the ACK pulse will not be issued in this case. After a certain time the host (not aware of stop or wait) should decide to abort any possible pending ACK pulse in order to be sure a new command can be issued. Therefore, the protocol provides a mechanism in which a command, and its corresponding ACK, can be aborted.

NOTE

The ACK pulse does not provide a time out. This means for the GO_UNTIL command that it can not be distinguished if a stop or wait has been executed (command discarded and ACK not issued) or if the “UNTIL” condition (BDM active) is just not reached yet. Hence in any case where the ACK pulse of a command is not issued the possible pending command should be aborted before issuing a new command. See the handshake abort procedure described in Section 5.4.8, “Hardware Handshake Abort Procedure”.

5.4.8 Hardware Handshake Abort Procedure

The abort procedure is based on the SYNC command. In order to abort a command, which had not issued the corresponding ACK pulse, the host controller should generate a low pulse in the BKGD pin by driving it low for at least 128 serial clock cycles and then driving it high for one serial clock cycle, providing a speedup pulse. By detecting this long low pulse in the BKGD pin, the target executes the SYNC protocol, see Section 5.4.9, “SYNC — Request Timed Reference Pulse”, and assumes that the pending command and therefore the related ACK pulse, are being aborted. Therefore, after the SYNC protocol has been completed the host is free to issue new BDM commands. For BDM firmware READ or WRITE commands it can not be guaranteed that the pending command is aborted when issuing a SYNC before the corresponding ACK pulse. There is a short latency time from the time the READ or WRITE access begins until it is finished and the corresponding ACK pulse is issued. The latency time depends on the firmware READ or WRITE command that is issued and on the selected bus clock rate. When the SYNC command starts during this latency time the READ or WRITE command will not be aborted, but the corresponding ACK pulse will be aborted. A pending GO, TRACE1 or GO_UNTIL command can not be aborted. Only the corresponding ACK pulse can be aborted by the SYNC command.

Although it is not recommended, the host could abort a pending BDM command by issuing a low pulse in the BKGD pin shorter than 128 serial clock cycles, which will not be interpreted as the SYNC command. The ACK is actually aborted when a negative edge is perceived by the target in the BKGD pin. The short abort pulse should have at least 4 clock cycles keeping the BKGD pin low, in order to allow the negative edge to be detected by the target. In this case, the target will not execute the SYNC protocol but the pending command will be aborted along with the ACK pulse. The potential problem with this abort procedure is when there is a conflict between the ACK pulse and the short abort pulse. In this case, the target may not perceive the abort pulse. The worst case is when the pending command is a read command (i.e., READ_BYTE). If the abort pulse is not perceived by the target the host will attempt to send a new command after the abort pulse was issued, while the target expects the host to retrieve the accessed memory byte. In this case, host and target will run out of synchronism. However, if the command to be aborted is not a read command the short abort pulse could be used. After a command is aborted the target assumes the next negative edge, after the abort pulse, is the first bit of a new BDM command.

NOTE

The details about the short abort pulse are being provided only as a reference for the reader to better understand the BDM internal behavior. It is not recommended that this procedure be used in a real application.

Since the host knows the target serial clock frequency, the SYNC command (used to abort a command) does not need to consider the lower possible target frequency. In this case, the host could issue a SYNC very close to the 128 serial clock cycles length. Providing a small overhead on the pulse length in order to assure the SYNC pulse will not be misinterpreted by the target. See Section 5.4.9, "SYNC — Request Timed Reference Pulse".

Figure 5-12 shows a SYNC command being issued after a READ_BYTE, which aborts the READ_BYTE command. Note that, after the command is aborted a new command could be issued by the host computer.

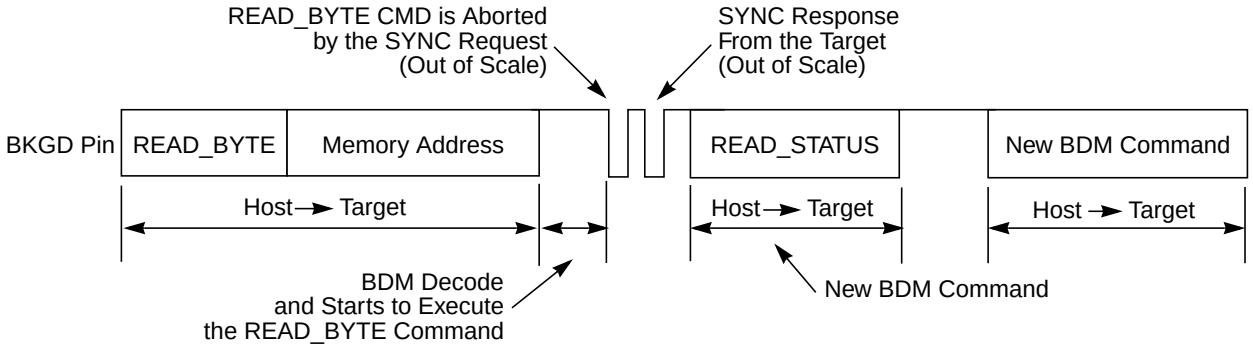

Figure 5-12. ACK Abort Procedure at the Command Level

NOTE

Figure 5-12 does not represent the signals in a true timing scale

Figure 5-13 shows a conflict between the ACK pulse and the SYNC request pulse. This conflict could occur if a POD device is connected to the target BKGD pin and the target is already in debug active mode. Consider that the target CPU is executing a pending BDM command at the exact moment the POD is being connected to the BKGD pin. In this case, an ACK pulse is issued along with the SYNC command. In this case, there is an electrical conflict between the ACK speedup pulse and the SYNC pulse. Since this is not a probable situation, the protocol does not prevent this conflict from happening.

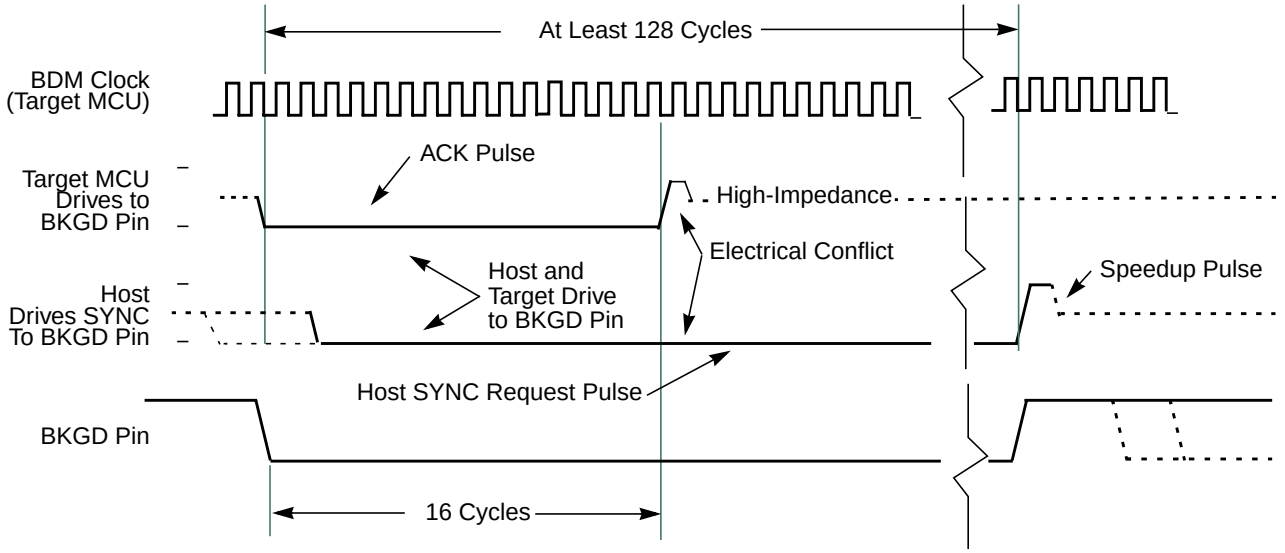

Figure 5-13. ACK Pulse and SYNC Request Conflict

NOTE

This information is being provided so that the MCU integrator will be aware that such a conflict could occur.

The hardware handshake protocol is enabled by the ACK_ENABLE and disabled by the ACK_DISABLE BDM commands. This provides backwards compatibility with the existing POD devices which are not able to execute the hardware handshake protocol. It also allows for new POD devices, that support the hardware handshake protocol, to freely communicate with the target device. If desired, without the need for waiting for the ACK pulse.

The commands are described as follows:

- ACK_ENABLE — enables the hardware handshake protocol. The target will issue the ACK pulse when a CPU command is executed by the CPU. The ACK_ENABLE command itself also has the ACK pulse as a response.
- ACK_DISABLE — disables the ACK pulse protocol. In this case, the host needs to use the worst case delay time at the appropriate places in the protocol.

The default state of the BDM after reset is hardware handshake protocol disabled.

All the read commands will ACK (if enabled) when the data bus cycle has completed and the data is then ready for reading out by the BKGD serial pin. All the write commands will ACK (if enabled) after the data has been received by the BDM through the BKGD serial pin and when the data bus cycle is complete. See Section 5.4.3, “BDM Hardware Commands” and Section 5.4.4, “Standard BDM Firmware Commands” for more information on the BDM commands.

The ACK_ENABLE sends an ACK pulse when the command has been completed. This feature could be used by the host to evaluate if the target supports the hardware handshake protocol. If an ACK pulse is issued in response to this command, the host knows that the target supports the hardware handshake protocol. If the target does not support the hardware handshake protocol the ACK pulse is not issued. In this case, the ACK_ENABLE command is ignored by the target since it is not recognized as a valid command.

The BACKGROUND command will issue an ACK pulse when the CPU changes from normal to background mode. The ACK pulse related to this command could be aborted using the SYNC command.

The GO command will issue an ACK pulse when the CPU exits from background mode. The ACK pulse related to this command could be aborted using the SYNC command.

The GO_UNTIL command is equivalent to a GO command with exception that the ACK pulse, in this case, is issued when the CPU enters into background mode. This command is an alternative to the GO command and should be used when the host wants to trace if a breakpoint match occurs and causes the CPU to enter active background mode. Note that the ACK is issued whenever the CPU enters BDM, which could be caused by a breakpoint match or by a BGND instruction being executed. The ACK pulse related to this command could be aborted using the SYNC command.

The TRACE1 command has the related ACK pulse issued when the CPU enters background active mode after one instruction of the application program is executed. The ACK pulse related to this command could be aborted using the SYNC command.

5.4.9 SYNC — Request Timed Reference Pulse

The SYNC command is unlike other BDM commands because the host does not necessarily know the correct communication speed to use for BDM communications until after it has analyzed the response to the SYNC command. To issue a SYNC command, the host should perform the following steps:

1. Drive the BKGD pin low for at least 128 cycles at the lowest possible BDM serial communication frequency (The lowest serial communication frequency is determined by the settings for the VCO clock (CPMUSYNR). The BDM clock frequency is always VCO clock frequency divided by 8.)
2. Drive BKGD high for a brief speedup pulse to get a fast rise time (this speedup pulse is typically one cycle of the host clock.)
3. Remove all drive to the BKGD pin so it reverts to high impedance.
4. Listen to the BKGD pin for the sync response pulse.

Upon detecting the SYNC request from the host, the target performs the following steps:

1. Discards any incomplete command received or bit retrieved.
2. Waits for BKGD to return to a logic one.
3. Delays 16 cycles to allow the host to stop driving the high speedup pulse.
4. Drives BKGD low for 128 cycles at the current BDM serial communication frequency.
5. Drives a one-cycle high speedup pulse to force a fast rise time on BKGD.
6. Removes all drive to the BKGD pin so it reverts to high impedance.

The host measures the low time of this 128 cycle SYNC response pulse and determines the correct speed for subsequent BDM communications. Typically, the host can determine the correct communication speed within a few percent of the actual target speed and the communication protocol can easily tolerate speed errors of several percent.

As soon as the SYNC request is detected by the target, any partially received command or bit retrieved is discarded. This is referred to as a soft-reset, equivalent to a time-out in the serial communication. After the SYNC response, the target will consider the next negative edge (issued by the host) as the start of a new BDM command or the start of new SYNC request.

Another use of the SYNC command pulse is to abort a pending ACK pulse. The behavior is exactly the same as in a regular SYNC command. Note that one of the possible causes for a command to not be acknowledged by the target is a host-target synchronization problem. In this case, the command may not have been understood by the target and so an ACK response pulse will not be issued.

5.4.10 Instruction Tracing

When a TRACE1 command is issued to the BDM in active BDM, the CPU exits the standard BDM firmware and executes a single instruction in the user code. Once this has occurred, the CPU is forced to return to the standard BDM firmware and the BDM is active and ready to receive a new command. If the TRACE1 command is issued again, the next user instruction will be executed. This facilitates stepping or tracing through the user code one instruction at a time.

If an interrupt is pending when a TRACE1 command is issued, the interrupt stacking operation occurs but no user instruction is executed. Once back in standard BDM firmware execution, the program counter points to the first instruction in the interrupt service routine.

Be aware when tracing through the user code that the execution of the user code is done step by step but all peripherals are free running. Hence possible timing relations between CPU code execution and occurrence of events of other peripherals no longer exist.

Do not trace the CPU instruction BGND used for soft breakpoints. Tracing over the BGND instruction will result in a return address pointing to BDM firmware address space.

When tracing through user code which contains stop or wait instructions the following will happen when the stop or wait instruction is traced:

The CPU enters stop or wait mode and the TRACE1 command can not be finished before leaving the low power mode. This is the case because BDM active mode can not be entered after CPU executed the stop instruction. However all BDM hardware commands except the BACKGROUND command are operational after tracing a stop or wait instruction and still being in stop or wait mode. If system stop mode is entered (all bus masters are in stop mode) no BDM command is operational.

As soon as stop or wait mode is exited the CPU enters BDM active mode and the saved PC value points to the entry of the corresponding interrupt service routine.

In case the handshake feature is enabled the corresponding ACK pulse of the TRACE1 command will be discarded when tracing a stop or wait instruction. Hence there is no ACK pulse when BDM active mode is entered as part of the TRACE1 command after CPU exited from stop or wait mode. All valid commands sent during CPU being in stop or wait mode or after CPU exited from stop or wait mode will have an ACK pulse. The handshake feature becomes disabled only when system stop mode has been reached. Hence after a system stop mode the handshake feature must be enabled again by sending the ACK_ENABLE command.

5.4.11 Serial Communication Time Out

The host initiates a host-to-target serial transmission by generating a falling edge on the BKGD pin. If BKGD is kept low for more than 128 target clock cycles, the target understands that a SYNC command was issued. In this case, the target will keep waiting for a rising edge on BKGD in order to answer the SYNC request pulse. If the rising edge is not detected, the target will keep waiting forever without any time-out limit.

Consider now the case where the host returns BKGD to logic one before 128 cycles. This is interpreted as a valid bit transmission, and not as a SYNC request. The target will keep waiting for another falling edge marking the start of a new bit. If, however, a new falling edge is not detected by the target within 512 clock cycles since the last falling edge, a time-out occurs and the current command is discarded without affecting memory or the operating mode of the MCU. This is referred to as a soft-reset.

If a read command is issued but the data is not retrieved within 512 serial clock cycles, a soft-reset will occur causing the command to be disregarded. The data is not available for retrieval after the time-out has occurred. This is the expected behavior if the handshake protocol is not enabled. In order to allow the data to be retrieved even with a large clock frequency mismatch (between BDM and CPU) when the hardware

handshake protocol is enabled, the time out between a read command and the data retrieval is disabled. Therefore, the host could wait for more then 512 serial clock cycles and still be able to retrieve the data from an issued read command. However, once the handshake pulse (ACK pulse) is issued, the time-out feature is re-activated, meaning that the target will time out after 512 clock cycles. Therefore, the host needs to retrieve the data within a 512 serial clock cycles time frame after the ACK pulse had been issued. After that period, the read command is discarded and the data is no longer available for retrieval. Any negative edge in the BKGD pin after the time-out period is considered to be a new command or a SYNC request.

Note that whenever a partially issued command, or partially retrieved data, has occurred the time out in the serial communication is active. This means that if a time frame higher than 512 serial clock cycles is observed between two consecutive negative edges and the command being issued or data being retrieved is not complete, a soft-reset will occur causing the partially received command or data retrieved to be disregarded. The next negative edge in the BKGD pin, after a soft-reset has occurred, is considered by the target as the start of a new BDM command, or the start of a SYNC request pulse.

Chapter 6
S12S Debug Module (S12SDBGV2)

Table 6-1. Revision History

Revision Number	Revision Date	Sections Affected	Summary of Changes
02.07	13.DEC.2007	6.5	Added application information
02.08	09.MAY.2008	General	Spelling corrections. Revision history format changed.
02.09	29.MAY.2008	6.4.5.4	Added note for end aligned, PurePC, rollover case.

6.1 Introduction

The S12SDBG module provides an on-chip trace buffer with flexible triggering capability to allow non-intrusive debug of application software. The S12SDBG module is optimized for S12SCPU debugging.

Typically the S12SDBG module is used in conjunction with the S12SBDM module, whereby the user configures the S12SDBG module for a debugging session over the BDM interface. Once configured the S12SDBG module is armed and the device leaves BDM returning control to the user program, which is then monitored by the S12SDBG module. Alternatively the S12SDBG module can be configured over a serial interface using SWI routines.

6.1.1 Glossary Of Terms

COF: Change Of Flow. Change in the program flow due to a conditional branch, indexed jump or interrupt.

BDM: Background Debug Mode

S12SBDM: Background Debug Module

DUG: Device User Guide, describing the features of the device into which the DBG is integrated.

WORD: 16 bit data entity

Data Line: 20 bit data entity

CPU: S12SCPU module

DBG: S12SDBG module

POR: Power On Reset

Tag: Tags can be attached to CPU opcodes as they enter the instruction pipe. If the tagged opcode reaches the execution stage a tag hit occurs.

6.1.2 Overview

The comparators monitor the bus activity of the CPU module. A match can initiate a state sequencer transition. On a transition to the Final State, bus tracing is triggered and/or a breakpoint can be generated.

Independent of comparator matches a transition to Final State with associated tracing and breakpoint can be triggered immediately by writing to the TRIG control bit.

The trace buffer is visible through a 2-byte window in the register address map and can be read out using standard 16-bit word reads. Tracing is disabled when the MCU system is secured.

6.1.3 Features

- Three comparators (A, B and C)
  - Comparators A compares the full address bus and full 16-bit data bus
  - Comparator A features a data bus mask register
  - Comparators B and C compare the full address bus only
  - Each comparator features selection of read or write access cycles
  - Comparator B allows selection of byte or word access cycles
  - Comparator matches can initiate state sequencer transitions
- Three comparator modes
  - Simple address/data comparator match mode
  - Inside address range mode, Addmin ≤ Address ≤ Addmax
  - Outside address range match mode, Address < Addmin or Address > Addmax
- Two types of matches
  - Tagged — This matches just before a specific instruction begins execution
  - Force — This is valid on the first instruction boundary after a match occurs
- Two types of breakpoints
  - CPU breakpoint entering BDM on breakpoint (BDM)
  - CPU breakpoint executing SWI on breakpoint (SWI)
- Trigger mode independent of comparators
  - TRIG Immediate software trigger
- Four trace modes
  - Normal: change of flow (COF) PC information is stored (see 6.4.5.2.1) for change of flow definition.
  - Loop1: same as Normal but inhibits consecutive duplicate source address entries
  - Detail: address and data for all cycles except free cycles and opcode fetches are stored
  - Compressed Pure PC: all program counter addresses are stored
- 4-stage state sequencer for trace buffer control
  - Tracing session trigger linked to Final State of state sequencer
  - Begin and End alignment of tracing to trigger

6.1.4 Modes of Operation

The DBG module can be used in all MCU functional modes.

During BDM hardware accesses and whilst the BDM module is active, CPU monitoring is disabled. When the CPU enters active BDM Mode through a BACKGROUND command, the DBG module, if already armed, remains armed.

The DBG module tracing is disabled if the MCU is secure, however, breakpoints can still be generated

Table 6-2. Mode Dependent Restriction Summary

BDM Enable	BDM Active	MCU Secure	Comparator Matches Enabled	Breakpoints Possible	Tagging Possible	Tracing Possible
x	x	1	Yes	Yes	Yes	No
0	0	0	Yes	Only SWI	Yes	Yes
0	1	0	Active BDM not possible when not enabled			
1	0	0	Yes	Yes	Yes	Yes
1	1	0	No	No	No	No

6.1.5 Block Diagram

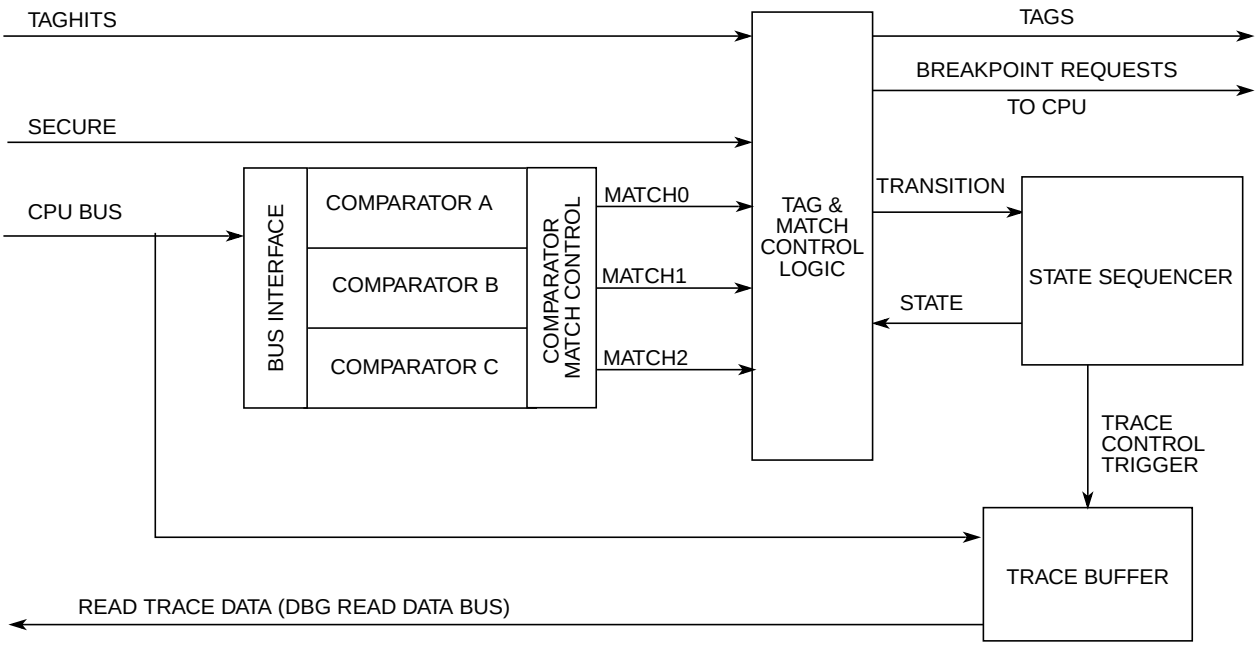

Figure 6-1. Debug Module Block Diagram

6.2 External Signal Description

There are no external signals associated with this module.

6.3 Memory Map and Registers

6.3.1 Module Memory Map

A summary of the registers associated with the DBG sub-block is shown in Figure 6-2. Detailed descriptions of the registers and bits are given in the subsections that follow.

Address	Name		Bit 7	6	5	4	3	2	1	Bit 0
0x0020	DBGC1	R	ARM	0	0	BDM	DBGBRK	0	COMRV	
		W		TRIG						
0x0021	DBGSR	R	[1]TBF	0	0	0	0	SSF2	SSF1	SSF0
		W								
0x0022	DBGTCR	R	0	TSOURCE	0	0	TRCMOD		0	TALIGN
		W								
0x0023	DBGC2	R	0	0	0	0	0	0	ABCM	
		W								
0x0024	DBGTBH	R	Bit 15	Bit 14	Bit 13	Bit 12	Bit 11	Bit 10	Bit 9	Bit 8
		W								
0x0025	DBGTBL	R	Bit 7	Bit 6	Bit 5	Bit 4	Bit 3	Bit 2	Bit 1	Bit 0
		W								
0x0026	DBGCNT	R	[1] TBF	0	CNT					
		W								
0x0027	DBGSCRX	R	0	0	0	0	SC3	SC2	SC1	SC0
		W								
0x0027	DBGMFR	R	0	0	0	0	0	MC2	MC1	MC0
		W								
[2] 0x0028	DBGACTL	R	SZE	SZ	TAG	BRK	RW	RWE	NDB	COMPE
		W								
[3] 0x0028	DBGBCTL	R	SZE	SZ	TAG	BRK	RW	RWE	0	COMPE
		W								
[4] 0x0028	DBGCCTL	R	0	0	TAG	BRK	RW	RWE	0	COMPE
		W								
0x0029	DBGXAH	R	0	0	0	0	0	0	Bit 17	Bit 16
		W								
0x002A	DBGXAM	R	Bit 15	14	13	12	11	10	9	Bit 8
		W								
0x002B	DBGXAL	R	Bit 7	6	5	4	3	2	1	Bit 0
		W								
0x002C	DBGADH	R	Bit 15	14	13	12	11	10	9	Bit 8
		W								
0x002D	DBGADL	R	Bit 7	6	5	4	3	2	1	Bit 0
		W								

Figure 6-2. Quick Reference to DBG Registers

Address	Name		Bit 7	6	5	4	3	2	1	Bit 0
0x002E	DBGADHM	R W	Bit 15	14	13	12	11	10	9	Bit 8
0x002F	DBGADLM	R W	Bit 7	6	5	4	3	2	1	Bit 0

1 This bit is visible at DBGCNT[7] and DBGSR[7]

2 This represents the contents if the Comparator A control register is blended into this address.

3 This represents the contents if the Comparator B control register is blended into this address

4 This represents the contents if the Comparator C control register is blended into this address

Figure 6-2. Quick Reference to DBG Registers

6.3.2 Register Descriptions

This section consists of the DBG control and trace buffer register descriptions in address order. Each comparator has a bank of registers that are visible through an 8-byte window between 0x0028 and 0x002F in the DBG module register address map. When ARM is set in DBGC1, the only bits in the DBG module registers that can be written are ARM, TRIG, and COMRV[1:0]

6.3.2.1 Debug Control Register 1 (DBGC1)

Address: 0x0020

	7	6	5	4	3	2	1	0
R	ARM	0	0	BDM	DBGBRK	0	COMRV	
W		TRIG						
Reset	0	0	0	0	0	0	0	0

= Unimplemented or Reserved

Figure 6-3. Debug Control Register (DBGC1)

Read: Anytime

Write: Bits 7, 1, 0 anytime

Bit 6 can be written anytime but always reads back as 0.

Bits 4:3 anytime DBG is not armed.

NOTE

When disarming the DBG by clearing ARM with software, the contents of bits[4:3] are not affected by the write, since up until the write operation, ARM = 1 preventing these bits from being written. These bits must be cleared using a second write if required.

Table 6-3. DBGC1 Field Descriptions

Field	Description
7 ARM	**Arm Bit** — The ARM bit controls whether the DBG module is armed. This bit can be set and cleared by user software and is automatically cleared on completion of a debug session, or if a breakpoint is generated with tracing not enabled. On setting this bit the state sequencer enters State1. 0 Debugger disarmed 1 Debugger armed
6 TRIG	**Immediate Trigger Request Bit** — This bit when written to 1 requests an immediate trigger independent of state sequencer status. When tracing is complete a forced breakpoint may be generated depending upon DBGBRK and BDM bit settings. This bit always reads back a 0. Writing a 0 to this bit has no effect. If the DBGTCR_TSOURCE bit is clear no tracing is carried out. If tracing has already commenced using BEGIN trigger alignment, it continues until the end of the tracing session as defined by the TALIGN bit, thus TRIG has no affect. In secure mode tracing is disabled and writing to this bit cannot initiate a tracing session. The session is ended by setting TRIG and ARM simultaneously. 0 Do not trigger until the state sequencer enters the Final State. 1 Trigger immediately
4 BDM	**Background Debug Mode Enable** — This bit determines if a breakpoint causes the system to enter Background Debug Mode (BDM) or initiate a Software Interrupt (SWI). If this bit is set but the BDM is not enabled by the ENBDM bit in the BDM module, then breakpoints default to SWI. 0 Breakpoint to Software Interrupt if BDM inactive. Otherwise no breakpoint. 1 Breakpoint to BDM, if BDM enabled. Otherwise breakpoint to SWI
3 DBGBRK	**S12SDBG Breakpoint Enable Bit** — The DBGBRK bit controls whether the debugger will request a breakpoint on reaching the state sequencer Final State. If tracing is enabled, the breakpoint is generated on completion of the tracing session. If tracing is not enabled, the breakpoint is generated immediately. 0 No Breakpoint generated 1 Breakpoint generated
1–0 COMRV	**Comparator Register Visibility Bits** — These bits determine which bank of comparator register is visible in the 8-byte window of the S12SDBG module address map, located between 0x0028 to 0x002F. Furthermore these bits determine which register is visible at the address 0x0027. See Table 6-4.

Table 6-4. COMRV Encoding

COMRV	Visible Comparator	Visible Register at 0x0027
00	Comparator A	DBGSCR1
01	Comparator B	DBGSCR2
10	Comparator C	DBGSCR3
11	None	DBGMFR

6.3.2.2 Debug Status Register (DBGSR)

Address: 0x0021

	7	6	5	4	3	2	1	0
R	TBF	0	0	0	0	SSF2	SSF1	SSF0
W								
Reset	—	0	0	0	0	0	0	0
POR	0	0	0	0	0	0	0	0

= Unimplemented or Reserved

Figure 6-4. Debug Status Register (DBGSR)

Read: Anytime

Write: Never

Table 6-5. DBGSR Field Descriptions

Field	Description
7 TBF	**Trace Buffer Full** — The TBF bit indicates that the trace buffer has stored 64 or more lines of data since it was last armed. If this bit is set, then all 64 lines will be valid data, regardless of the value of DBGCNT bits. The TBF bit is cleared when ARM in DBGC1 is written to a one. The TBF is cleared by the power on reset initialization. Other system generated resets have no affect on this bit This bit is also visible at DBGCNT[7]
2–0 SSF[2:0]	**State Sequencer Flag Bits** — The SSF bits indicate in which state the State Sequencer is currently in. During a debug session on each transition to a new state these bits are updated. If the debug session is ended by software clearing the ARM bit, then these bits retain their value to reflect the last state of the state sequencer before disarming. If a debug session is ended by an internal event, then the state sequencer returns to state0 and these bits are cleared to indicate that state0 was entered during the session. On arming the module the state sequencer enters state1 and these bits are forced to SSF[2:0] = 001. See Table 6-6**.**

Table 6-6. SSF[2:0] — State Sequence Flag Bit Encoding

SSF[2:0]	Current State
000	State0 (disarmed)
001	State1
010	State2
011	State3
100	Final State
101,110,111	Reserved

6.3.2.3 Debug Trace Control Register (DBGTCR)

Address: 0x0022

	7	6	5	4	3	2	1	0
R	0	TSOURCE	0	0	TRCMOD		0	TALIGN
W								
Reset	0	0	0	0	0	0	0	0

Figure 6-5. Debug Trace Control Register (DBGTCR)

Read: Anytime

Write: Bit 6 only when DBG is neither secure nor armed.Bits 3,2,0 anytime the module is disarmed.

Table 6-7. DBGTCR Field Descriptions

Field	Description
6 TSOURCE	**Trace Source Control Bit** — The TSOURCE bit enables a tracing session given a trigger condition. If the MCU system is secured, this bit cannot be set and tracing is inhibited. This bit must be set to read the trace buffer. 0 Debug session without tracing requested 1 Debug session with tracing requested

Table 6-7. DBGTCR Field Descriptions (continued)

Field	Description
3–2 TRCMOD	**Trace Mode Bits** — See 6.4.5.2 for detailed Trace Mode descriptions. In Normal Mode, change of flow information is stored. In Loop1 Mode, change of flow information is stored but redundant entries into trace memory are inhibited. In Detail Mode, address and data for all memory and register accesses is stored. In Compressed Pure PC mode the program counter value for each instruction executed is stored. See Table 6-8.
0 TALIGN	**Trigger Align Bit** — This bit controls whether the trigger is aligned to the beginning or end of a tracing session. 0 Trigger at end of stored data 1 Trigger before storing data

Table 6-8. TRCMOD Trace Mode Bit Encoding

TRCMOD	Description
00	Normal
01	Loop1
10	Detail
11	Compressed Pure PC

6.3.2.4 Debug Control Register2 (DBGC2)

Address: 0x0023

	7	6	5	4	3	2	1	0
R	0	0	0	0	0	0	ABCM	
W								
Reset	0	0	0	0	0	0	0	0

= Unimplemented or Reserved

Figure 6-6. Debug Control Register2 (DBGC2)

Read: Anytime

Write: Anytime the module is disarmed.

This register configures the comparators for range matching.

Table 6-9. DBGC2 Field Descriptions

Field	Description
1–0 ABCM[1:0]	**A and B Comparator Match Control** — These bits determine the A and B comparator match mapping as described in Table 6-10.

Table 6-10. ABCM Encoding

ABCM	Description
00	Match0 mapped to comparator A match: Match1 mapped to comparator B match.
01	Match 0 mapped to comparator A/B inside range: Match1 disabled.
10	Match 0 mapped to comparator A/B outside range: Match1 disabled.

Table 6-10. ABCM Encoding

ABCM	Description
11	Reserved(1)

1. Currently defaults to Comparator A, Comparator B disabled

6.3.2.5 Debug Trace Buffer Register (DBGTBH:DBGTBL)

Address: 0x0024, 0x0025

	15	14	13	12	11	10	9	8	7	6	5	4	3	2	1	0
R W	Bit 15	Bit 14	Bit 13	Bit 12	Bit 11	Bit 10	Bit 9	Bit 8	Bit 7	Bit 6	Bit 5	Bit 4	Bit 3	Bit 2	Bit 1	Bit 0
POR	X	X	X	X	X	X	X	X	X	X	X	X	X	X	X	X
Other Resets	—	—	—	—	—	—	—	—	—	—	—	—	—	—	—	—

Figure 6-7. Debug Trace Buffer Register (DBGTB)

Read: Only when unlocked AND unsecured AND not armed AND TSOURCE set.

Write: Aligned word writes when disarmed unlock the trace buffer for reading but do not affect trace buffer contents.

Table 6-11. DBGTB Field Descriptions

Field	Description
15–0 Bit[15:0]	**Trace Buffer Data Bits** — The Trace Buffer Register is a window through which the 20-bit wide data lines of the Trace Buffer may be read 16 bits at a time. Each valid read of DBGTB increments an internal trace buffer pointer which points to the next address to be read. When the ARM bit is set the trace buffer is locked to prevent reading. The trace buffer can only be unlocked for reading by writing to DBGTB with an aligned word write when the module is disarmed. The DBGTB register can be read only as an aligned word, any byte reads or misaligned access of these registers return 0 and do not cause the trace buffer pointer to increment to the next trace buffer address. Similarly reads while the debugger is armed or with the TSOURCE bit clear, return 0 and do not affect the trace buffer pointer. The POR state is undefined. Other resets do not affect the trace buffer contents.

6.3.2.6 Debug Count Register (DBGCNT)

Address: 0x0026

	7	6	5	4	3	2	1	0
R	TBF	0	CNT					
W								
Reset	—	—	—	—	—	—	—	—
POR	0	0	0	0	0	0	0	0

= Unimplemented or Reserved

Figure 6-8. Debug Count Register (DBGCNT)

Read: Anytime

Write: Never

Table 6-12. DBGCNT Field Descriptions

Field	Description
7 TBF	**Trace Buffer Full** — The TBF bit indicates that the trace buffer has stored 64 or more lines of data since it was last armed. If this bit is set, then all 64 lines will be valid data, regardless of the value of DBGCNT bits. The TBF bit is cleared when ARM in DBGC1 is written to a one. The TBF is cleared by the power on reset initialization. Other system generated resets have no affect on this bit This bit is also visible at DBGSR[7]
5–0 CNT[5:0]	**Count Value** — The CNT bits indicate the number of valid data 20-bit data lines stored in the Trace Buffer. Table 6-13 shows the correlation between the CNT bits and the number of valid data lines in the Trace Buffer. When the CNT rolls over to zero, the TBF bit in DBGSR is set and incrementing of CNT will continue in end-trigger mode. The DBGCNT register is cleared when ARM in DBGC1 is written to a one. The DBGCNT register is cleared by power-on-reset initialization but is not cleared by other system resets. Thus should a reset occur during a debug session, the DBGCNT register still indicates after the reset, the number of valid trace buffer entries stored before the reset occurred. The DBGCNT register is not decremented when reading from the trace buffer.

Table 6-13. CNT Decoding Table

TBF	CNT[5:0]	Description
0	000000	No data valid
0	000001 000010 000100 000110 .. 111111	1 line valid 2 lines valid 4 lines valid 6 lines valid .. 63 lines valid
1	000000	64 lines valid; if using Begin trigger alignment, ARM bit will be cleared and the tracing session ends.
1	000001 111110	64 lines valid, oldest data has been overwritten by most recent data

6.3.2.7 Debug State Control Registers

There is a dedicated control register for each of the state sequencer states 1 to 3 that determines if transitions from that state are allowed, depending upon comparator matches or tag hits, and defines the next state for the state sequencer following a match. The three debug state control registers are located at the same address in the register address map (0x0027). Each register can be accessed using the COMRV bits in DBGC1 to blend in the required register. The COMRV = 11 value blends in the match flag register (DBGMFR).

Table 6-14. State Control Register Access Encoding

COMRV	Visible State Control Register
00	DBGSCR1
01	DBGSCR2
10	DBGSCR3
11	DBGMFR

6.3.2.7.1 Debug State Control Register 1 (DBGSCR1)

Address: 0x0027

	7	6	5	4	3	2	1	0
R	0	0	0	0	SC3	SC2	SC1	SC0
W								
Reset	0	0	0	0	0	0	0	0

= Unimplemented or Reserved

Figure 6-9. Debug State Control Register 1 (DBGSCR1)

Read: If COMRV[1:0] = 00

Write: If COMRV[1:0] = 00 and DBG is not armed.

This register is visible at 0x0027 only with COMRV[1:0] = 00. The state control register 1 selects the targeted next state whilst in State1. The matches refer to the match channels of the comparator match control logic as depicted in Figure 6-1 and described in 6.3.2.8.1. Comparators must be enabled by setting the comparator enable bit in the associated DBGXCTL control register.

Table 6-15. DBGSCR1 Field Descriptions

Field	Description
3–0 SC[3:0]	These bits select the targeted next state whilst in State1, based upon the match event.

Table 6-16. State1 Sequencer Next State Selection

SC[3:0]	Description (Unspecified matches have no effect)
0000	Any match to Final State
0001	Match1 to State3
0010	Match2 to State2
0011	Match1 to State2
0100	Match0 to State2..... Match1 to State3
0101	Match1 to State3.....Match0 to Final State
0110	Match0 to State2..... Match2 to State3
0111	Either Match0 or Match1 to State2
1000	Reserved
1001	Match0 to State3
1010	Reserved
1011	Reserved
1100	Reserved
1101	Either Match0 or Match2 to Final State.....Match1 to State2
1110	Reserved
1111	Reserved

The priorities described in Table 6-36 dictate that in the case of simultaneous matches, a match leading to final state has priority followed by the match on the lower channel number (0,1,2). Thus with SC[3:0]=1101 a simultaneous match0/match1 transitions to final state.

6.3.2.7.2 Debug State Control Register 2 (DBGSCR2)

Address: 0x0027

	7	6	5	4	3	2	1	0
R	0	0	0	0	SC3	SC2	SC1	SC0
W								
Reset	0	0	0	0	0	0	0	0

= Unimplemented or Reserved

Figure 6-10. Debug State Control Register 2 (DBGSCR2)

Read: If COMRV[1:0] = 01

Write: If COMRV[1:0] = 01 and DBG is not armed.

This register is visible at 0x0027 only with COMRV[1:0] = 01. The state control register 2 selects the targeted next state whilst in State2. The matches refer to the match channels of the comparator match control logic as depicted in Figure 6-1 and described in 6.3.2.8.1. Comparators must be enabled by setting the comparator enable bit in the associated DBGXCTL control register.

Table 6-17. DBGSCR2 Field Descriptions

Field	Description
3–0 SC[3:0]	These bits select the targeted next state whilst in State2, based upon the match event.

Table 6-18. State2 —Sequencer Next State Selection

SC[3:0]	Description (Unspecified matches have no effect)
0000	Match0 to State1..... Match2 to State3.
0001	Match1 to State3
0010	Match2 to State3
0011	Match1 to State3..... Match0 Final State
0100	Match1 to State1..... Match2 to State3.
0101	Match2 to Final State
0110	Match2 to State1..... Match0 to Final State
0111	Either Match0 or Match1 to Final State
1000	Reserved
1001	Reserved
1010	Reserved
1011	Reserved
1100	Either Match0 or Match1 to Final State.....Match2 to State3
1101	Reserved
1110	Reserved
1111	Either Match0 or Match1 to Final State.....Match2 to State1

The priorities described in Table 6-36 dictate that in the case of simultaneous matches, a match leading to final state has priority followed by the match on the lower channel number (0,1,2)

6.3.2.7.3 Debug State Control Register 3 (DBGSCR3)

Address: 0x0027

	7	6	5	4	3	2	1	0
R	0	0	0	0	SC3	SC2	SC1	SC0
W								
Reset	0	0	0	0	0	0	0	0

= Unimplemented or Reserved

Figure 6-11. Debug State Control Register 3 (DBGSCR3)

Read: If COMRV[1:0] = 10

Write: If COMRV[1:0] = 10 and DBG is not armed.

This register is visible at 0x0027 only with COMRV[1:0] = 10. The state control register three selects the targeted next state whilst in State3. The matches refer to the match channels of the comparator match control logic as depicted in Figure 6-1 and described in 6.3.2.8.1. Comparators must be enabled by setting the comparator enable bit in the associated DBGXCTL control register.

Table 6-19. DBGSCR3 Field Descriptions

Field	Description
3–0 SC[3:0]	These bits select the targeted next state whilst in State3, based upon the match event.

Table 6-20. State3 — Sequencer Next State Selection

SC[3:0]	Description (Unspecified matches have no effect)
0000	Match0 to State1
0001	Match2 to State2..... Match1 to Final State
0010	Match0 to Final State..... Match1 to State1
0011	Match1 to Final State..... Match2 to State1
0100	Match1 to State2
0101	Match1 to Final State
0110	Match2 to State2..... Match0 to Final State
0111	Match0 to Final State
1000	Reserved
1001	Reserved
1010	Either Match1 or Match2 to State1..... Match0 to Final State
1011	Reserved
1100	Reserved
1101	Either Match1 or Match2 to Final State..... Match0 to State1
1110	Match0 to State2..... Match2 to Final State
1111	Reserved

The priorities described in Table 6-36 dictate that in the case of simultaneous matches, a match leading to final state has priority followed by the match on the lower channel number (0,1,2).

6.3.2.7.4 Debug Match Flag Register (DBGMFR)

Address: 0x0027

	7	6	5	4	3	2	1	0
R	0	0	0	0	0	MC2	MC1	MC0
W								
Reset	0	0	0	0	0	0	0	0

= Unimplemented or Reserved

Figure 6-12. Debug Match Flag Register (DBGMFR)

Read: If COMRV[1:0] = 11

Write: Never

DBGMFR is visible at 0x0027 only with COMRV[1:0] = 11. It features 3 flag bits each mapped directly to a channel. Should a match occur on the channel during the debug session, then the corresponding flag is set and remains set until the next time the module is armed by writing to the ARM bit. Thus the contents are retained after a debug session for evaluation purposes. These flags cannot be cleared by software, they are cleared only when arming the module. A set flag does not inhibit the setting of other flags. Once a flag is set, further comparator matches on the same channel in the same session have no affect on that flag.

6.3.2.8 Comparator Register Descriptions

Each comparator has a bank of registers that are visible through an 8-byte window in the DBG module register address map. Comparator A consists of 8 register bytes (3 address bus compare registers, two data bus compare registers, two data bus mask registers and a control register). Comparator B consists of four register bytes (three address bus compare registers and a control register). Comparator C consists of four register bytes (three address bus compare registers and a control register).

Each set of comparator registers can be accessed using the COMRV bits in the DBGC1 register. Unimplemented registers (e.g. Comparator B data bus and data bus masking) read as zero and cannot be written. The control register for comparator B differs from those of comparators A and C.

Table 6-21. Comparator Register Layout

0x0028	CONTROL	Read/Write	Comparators A,B and C
0x0029	ADDRESS HIGH	Read/Write	Comparators A,B and C
0x002A	ADDRESS MEDIUM	Read/Write	Comparators A,B and C
0x002B	ADDRESS LOW	Read/Write	Comparators A,B and C
0x002C	DATA HIGH COMPARATOR	Read/Write	Comparator A only
0x002D	DATA LOW COMPARATOR	Read/Write	Comparator A only
0x002E	DATA HIGH MASK	Read/Write	Comparator A only
0x002F	DATA LOW MASK	Read/Write	Comparator A only

6.3.2.8.1 Debug Comparator Control Register (DBGXCTL)

The contents of this register bits 7 and 6 differ depending upon which comparator registers are visible in the 8-byte window of the DBG module register address map.

Address: 0x0028

	7	6	5	4	3	2	1	0
R W	SZE	SZ	TAG	BRK	RW	RWE	NDB	COMPE
Reset	0	0	0	0	0	0	0	0

= Unimplemented or Reserved

Figure 6-13. Debug Comparator Control Register DBGACTL (Comparator A)

Address: 0x0028

	7	6	5	4	3	2	1	0
R W	SZE	SZ	TAG	BRK	RW	RWE	0	COMPE
Reset	0	0	0	0	0	0	0	0

= Unimplemented or Reserved

Figure 6-14. Debug Comparator Control Register DBGBCTL (Comparator B)

Address: 0x0028

	7	6	5	4	3	2	1	0
R W	0	0	TAG	BRK	RW	RWE	0	COMPE
Reset	0	0	0	0	0	0	0	0

= Unimplemented or Reserved

Figure 6-15. Debug Comparator Control Register DBGCCTL (Comparator C)

Read: DBGACTL if COMRV[1:0] = 00
DBGBCTL if COMRV[1:0] = 01
DBGCCTL if COMRV[1:0] = 10

Write: DBGACTL if COMRV[1:0] = 00 and DBG not armed
DBGBCTL if COMRV[1:0] = 01 and DBG not armed
DBGCCTL if COMRV[1:0] = 10 and DBG not armed

Table 6-22. DBGXCTL Field Descriptions

Field	Description
7 SZE (Comparators A and B)	**Size Comparator Enable Bit** — The SZE bit controls whether access size comparison is enabled for the associated comparator. This bit is ignored if the TAG bit in the same register is set. 0 Word/Byte access size is not used in comparison 1 Word/Byte access size is used in comparison
6 SZ (Comparators A and B)	**Size Comparator Value Bit** — The SZ bit selects either word or byte access size in comparison for the associated comparator. This bit is ignored if the SZE bit is cleared or if the TAG bit in the same register is set. 0 Word access size is compared 1 Byte access size is compared

Table 6-22. DBGXCTL Field Descriptions (continued)

Field	Description
5 TAG	**Tag Select**— This bit controls whether the comparator match has immediate effect, causing an immediate state sequencer transition or tag the opcode at the matched address. Tagged opcodes trigger only if they reach the execution stage of the instruction queue. 0 Allow state sequencer transition immediately on match 1 On match, tag the opcode. If the opcode is about to be executed allow a state sequencer transition
4 BRK	**Break**— This bit controls whether a comparator match terminates a debug session immediately, independent of state sequencer state. To generate an immediate breakpoint the module breakpoints must be enabled using the DBGC1 bit DBGBRK. 0 The debug session termination is dependent upon the state sequencer and trigger conditions. 1 A match on this channel terminates the debug session immediately; breakpoints if active are generated, tracing, if active, is terminated and the module disarmed.
3 RW	**Read/Write Comparator Value Bit** — The RW bit controls whether read or write is used in compare for the associated comparator. The RW bit is not used if RWE = 0. This bit is ignored if the TAG bit in the same register is set. 0 Write cycle is matched1Read cycle is matched
2 RWE	**Read/Write Enable Bit** — The RWE bit controls whether read or write comparison is enabled for the associated comparator.This bit is ignored if the TAG bit in the same register is set 0 Read/Write is not used in comparison 1 Read/Write is used in comparison
1 NDB (Comparator A)	**Not Data Bus** — The NDB bit controls whether the match occurs when the data bus matches the comparator register value or when the data bus differs from the register value. This bit is ignored if the TAG bit in the same register is set. This bit is only available for comparator A. 0 Match on data bus equivalence to comparator register contents 1 Match on data bus difference to comparator register contents
0 COMPE	Determines if comparator is enabled 0 The comparator is not enabled 1 The comparator is enabled

Table 6-23 shows the effect for RWE and RW on the comparison conditions. These bits are ignored if the corresponding TAG bit is set since the match occurs based on the tagged opcode reaching the execution stage of the instruction queue.

Table 6-23. Read or Write Comparison Logic Table

RWE Bit	RW Bit	RW Signal	Comment
0	x	0	RW not used in comparison
0	x	1	RW not used in comparison
1	0	0	Write data bus
1	0	1	No match
1	1	0	No match
1	1	1	Read data bus

6.3.2.8.2 Debug Comparator Address High Register (DBGXAH)

Address: 0x0029

	7	6	5	4	3	2	1	0
R	0	0	0	0	0	0	Bit 17	Bit 16
W								
Reset	0	0	0	0	0	0	0	0

= Unimplemented or Reserved

Figure 6-16. Debug Comparator Address High Register (DBGXAH)

The DBGC1_COMRV bits determine which comparator address registers are visible in the 8-byte window from 0x0028 to 0x002F as shown in Table 6-24.

Table 6-24. Comparator Address Register Visibility

COMRV	Visible Comparator
00	DBGAAH, DBGAAM, DBGAAL
01	DBGBAH, DBGBAM, DBGBAL
10	DBGCAH, DBGCAM, DBGCAL
11	None

Read: Anytime. See Table 6-24 for visible register encoding.

Write: If DBG not armed. See Table 6-24 for visible register encoding.

Table 6-25. DBGXAH Field Descriptions

Field	Description
1–0 Bit[17:16]	**Comparator Address High Compare Bits** — The Comparator address high compare bits control whether the selected comparator compares the address bus bits [17:16] to a logic one or logic zero. 0 Compare corresponding address bit to a logic zero 1 Compare corresponding address bit to a logic one

6.3.2.8.3 Debug Comparator Address Mid Register (DBGXAM)

Address: 0x002A

	7	6	5	4	3	2	1	0
R W	Bit 15	Bit 14	Bit 13	Bit 12	Bit 11	Bit 10	Bit 9	Bit 8
Reset	0	0	0	0	0	0	0	0

Figure 6-17. Debug Comparator Address Mid Register (DBGXAM)

Read: Anytime. See Table 6-24 for visible register encoding.

Write: If DBG not armed. See Table 6-24 for visible register encoding.

Table 6-26. DBGXAM Field Descriptions

Field	Description
7–0 Bit[15:8]	**Comparator Address Mid Compare Bits** — The Comparator address mid compare bits control whether the selected comparator compares the address bus bits [15:8] to a logic one or logic zero. 0 Compare corresponding address bit to a logic zero 1 Compare corresponding address bit to a logic one

6.3.2.8.4 Debug Comparator Address Low Register (DBGXAL)

Address: 0x002B

	7	6	5	4	3	2	1	0
R W	Bit 7	Bit 6	Bit 5	Bit 4	Bit 3	Bit 2	Bit 1	Bit 0
Reset	0	0	0	0	0	0	0	0

Figure 6-18. Debug Comparator Address Low Register (DBGXAL)

Read: Anytime. See Table 6-24 for visible register encoding.

Write: If DBG not armed. See Table 6-24 for visible register encoding.

Table 6-27. DBGXAL Field Descriptions

Field	Description
7–0 Bits[7:0]	**Comparator Address Low Compare Bits** — The Comparator address low compare bits control whether the selected comparator compares the address bus bits [7:0] to a logic one or logic zero. 0 Compare corresponding address bit to a logic zero 1 Compare corresponding address bit to a logic one

6.3.2.8.5 Debug Comparator Data High Register (DBGADH)

Address: 0x002C

	7	6	5	4	3	2	1	0
R W	Bit 15	Bit 14	Bit 13	Bit 12	Bit 11	Bit 10	Bit 9	Bit 8
Reset	0	0	0	0	0	0	0	0

Figure 6-19. Debug Comparator Data High Register (DBGADH)

Read: If COMRV[1:0] = 00

Write: If COMRV[1:0] = 00 and DBG not armed.

Table 6-28. DBGADH Field Descriptions

Field	Description
7–0 Bits[15:8]	**Comparator Data High Compare Bits**— The Comparator data high compare bits control whether the selected comparator compares the data bus bits [15:8] to a logic one or logic zero. The comparator data compare bits are only used in comparison if the corresponding data mask bit is logic 1. This register is available only for comparator A. Data bus comparisons are only performed if the TAG bit in DBGACTL is clear. 0 Compare corresponding data bit to a logic zero 1 Compare corresponding data bit to a logic one

6.3.2.8.6 Debug Comparator Data Low Register (DBGADL)

Address: 0x002D

	7	6	5	4	3	2	1	0
R W	Bit 7	Bit 6	Bit 5	Bit 4	Bit 3	Bit 2	Bit 1	Bit 0
Reset	0	0	0	0	0	0	0	0

Figure 6-20. Debug Comparator Data Low Register (DBGADL)

Read: If COMRV[1:0] = 00

Write: If COMRV[1:0] = 00 and DBG not armed.

Table 6-29. DBGADL Field Descriptions

Field	Description
7–0 Bits[7:0]	**Comparator Data Low Compare Bits** — The Comparator data low compare bits control whether the selected comparator compares the data bus bits [7:0] to a logic one or logic zero. The comparator data compare bits are only used in comparison if the corresponding data mask bit is logic 1. This register is available only for comparator A. Data bus comparisons are only performed if the TAG bit in DBGACTL is clear 0 Compare corresponding data bit to a logic zero 1 Compare corresponding data bit to a logic one

6.3.2.8.7 Debug Comparator Data High Mask Register (DBGADHM)

Address: 0x002E

	7	6	5	4	3	2	1	0
R W	Bit 15	Bit 14	Bit 13	Bit 12	Bit 11	Bit 10	Bit 9	Bit 8
Reset	0	0	0	0	0	0	0	0

Figure 6-21. Debug Comparator Data High Mask Register (DBGADHM)

Read: If COMRV[1:0] = 00

Write: If COMRV[1:0] = 00 and DBG not armed.

Table 6-30. DBGADHM Field Descriptions

Field	Description
7–0 Bits[15:8]	**Comparator Data High Mask Bits** — The Comparator data high mask bits control whether the selected comparator compares the data bus bits [15:8] to the corresponding comparator data compare bits. Data bus comparisons are only performed if the TAG bit in DBGACTL is clear 0 Do not compare corresponding data bit Any value of corresponding data bit allows match. 1 Compare corresponding data bit

6.3.2.8.8 Debug Comparator Data Low Mask Register (DBGADLM)

Address: 0x002F

	7	6	5	4	3	2	1	0
R W	Bit 7	Bit 6	Bit 5	Bit 4	Bit 3	Bit 2	Bit 1	Bit 0
Reset	0	0	0	0	0	0	0	0

Figure 6-22. Debug Comparator Data Low Mask Register (DBGADLM)

Read: If COMRV[1:0] = 00

Write: If COMRV[1:0] = 00 and DBG not armed.

Table 6-31. DBGADLM Field Descriptions

Field	Description
7–0 Bits[7:0]	**Comparator Data Low Mask Bits** — The Comparator data low mask bits control whether the selected comparator compares the data bus bits [7:0] to the corresponding comparator data compare bits. Data bus comparisons are only performed if the TAG bit in DBGACTL is clear 0 Do not compare corresponding data bit. Any value of corresponding data bit allows match 1 Compare corresponding data bit

6.4 Functional Description

This section provides a complete functional description of the DBG module. If the part is in secure mode, the DBG module can generate breakpoints but tracing is not possible.

6.4.1 S12SDBG Operation

Arming the DBG module by setting ARM in DBGC1 allows triggering the state sequencer, storing of data in the trace buffer and generation of breakpoints to the CPU. The DBG module is made up of four main blocks, the comparators, control logic, the state sequencer, and the trace buffer.

The comparators monitor the bus activity of the CPU. All comparators can be configured to monitor address bus activity. Comparator A can also be configured to monitor databus activity and mask out individual data bus bits during a compare. Comparators can be configured to use R/W and word/byte access qualification in the comparison. A match with a comparator register value can initiate a state sequencer transition to another state (see Figure 6-24). Either forced or tagged matches are possible. Using

a forced match, a state sequencer transition can occur immediately on a successful match of system busses and comparator registers. Whilst tagging, at a comparator match, the instruction opcode is tagged and only if the instruction reaches the execution stage of the instruction queue can a state sequencer transition occur. In the case of a transition to Final State, bus tracing is triggered and/or a breakpoint can be generated.

A state sequencer transition to final state (with associated breakpoint, if enabled) can be initiated by writing to the TRIG bit in the DBGC1 control register.

The trace buffer is visible through a 2-byte window in the register address map and must be read out using standard 16-bit word reads.

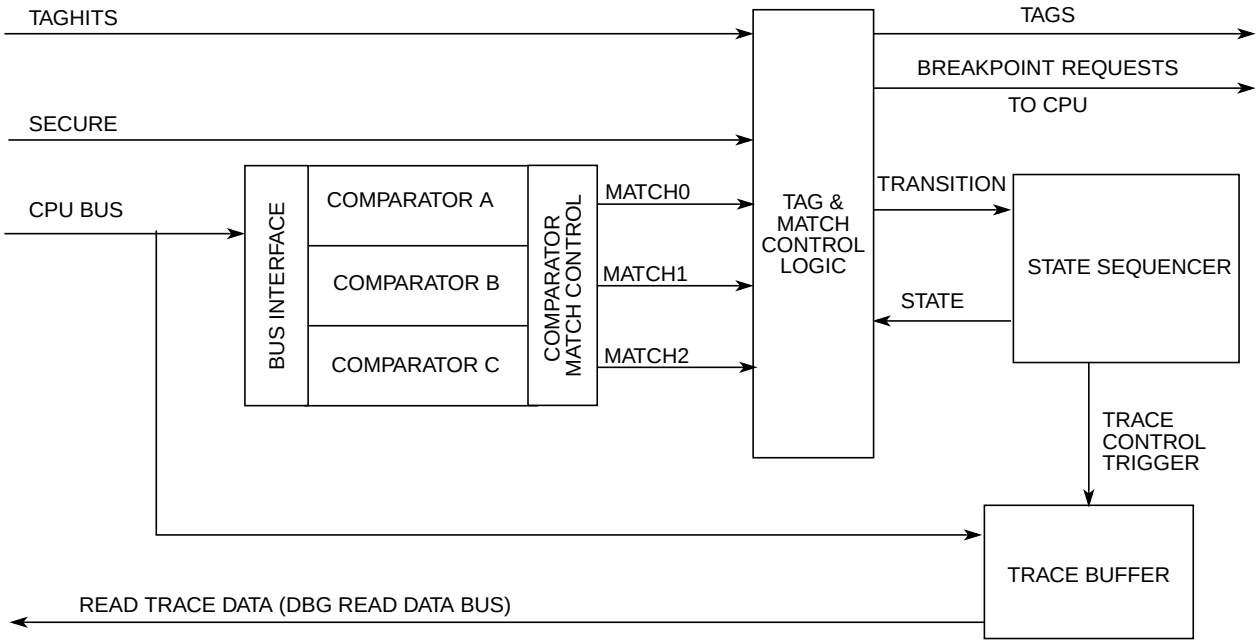

Figure 6-23. DBG Overview

6.4.2 Comparator Modes

The DBG contains three comparators, A, B and C. Each comparator compares the system address bus with the address stored in DBGXAH, DBGXAM, and DBGXAL. Furthermore, comparator A also compares the data buses to the data stored in DBGADH, DBGADL and allows masking of individual data bus bits.

All comparators are disabled in BDM and during BDM accesses.

The comparator match control logic (see Figure 6-23) configures comparators to monitor the buses for an exact address or an address range, whereby either an access inside or outside the specified range generates a match condition. The comparator configuration is controlled by the control register contents and the range control by the DBGC2 contents.

A match can initiate a transition to another state sequencer state (see 6.4.4”). The comparator control register also allows the type of access to be included in the comparison through the use of the RWE, RW, SZE, and SZ bits. The RWE bit controls whether read or write comparison is enabled for the associated comparator and the RW bit selects either a read or write access for a valid match. Similarly the SZE and

SZ bits allow the size of access (word or byte) to be considered in the compare. Only comparators A and B feature SZE and SZ.

The TAG bit in each comparator control register is used to determine the match condition. By setting TAG, the comparator qualifies a match with the output of opcode tracking logic and a state sequencer transition occurs when the tagged instruction reaches the CPU execution stage. Whilst tagging the RW, RWE, SZE, and SZ bits and the comparator data registers are ignored; the comparator address register must be loaded with the exact opcode address.

If the TAG bit is clear (forced type match) a comparator match is generated when the selected address appears on the system address bus. If the selected address is an opcode address, the match is generated when the opcode is fetched from the memory, which precedes the instruction execution by an indefinite number of cycles due to instruction pipelining. For a comparator match of an opcode at an odd address when TAG = 0, the corresponding even address must be contained in the comparator register. Thus for an opcode at odd address (n), the comparator register must contain address (n–1).

Once a successful comparator match has occurred, the condition that caused the original match is not verified again on subsequent matches. Thus if a particular data value is verified at a given address, this address may not still contain that data value when a subsequent match occurs.

Match[0, 1, 2] map directly to Comparators [A, B, C] respectively, except in range modes (see 6.3.2.4). Comparator channel priority rules are described in the priority section (6.4.3.4).

6.4.2.1 Single Address Comparator Match

With range comparisons disabled, the match condition is an exact equivalence of address bus with the value stored in the comparator address registers. Further qualification of the type of access (R/W, word/byte) and databus contents is possible, depending on comparator channel.

6.4.2.1.1 Comparator C

Comparator C offers only address and direction (R/W) comparison. The exact address is compared, thus with the comparator address register loaded with address (n) a word access of address (n–1) also accesses (n) but does not cause a match.

Table 6-32. Comparator C Access Considerations

Condition For Valid Match	Comp C Address	RWE	RW	Examples
Read and write accesses of ADDR[n]	ADDR[n](1)	0	X	LDAA ADDR[n] STAA #$BYTE ADDR[n]
Write accesses of ADDR[n]	ADDR[n]	1	0	STAA #$BYTE ADDR[n]
Read accesses of ADDR[n]	ADDR[n]	1	1	LDAA #$BYTE ADDR[n]

1. A word access of ADDR[n-1] also accesses ADDR[n] but does not generate a match. The comparator address register must contain the exact address from the code.

6.4.2.1.2 Comparator B

Comparator B offers address, direction (R/W) and access size (word/byte) comparison. If the SZE bit is set the access size (word or byte) is compared with the SZ bit value such that only the specified size of

access causes a match. Thus if configured for a byte access of a particular address, a word access covering the same address does not lead to match.

Assuming the access direction is not qualified (RWE=0), for simplicity, the size access considerations are shown in Table 6-33.

Table 6-33. Comparator B Access Size Considerations

Condition For Valid Match	Comp B Address	RWE	SZE	SZ8	Examples
Word and byte accesses of ADDR[n]	ADDR[n](1)	0	0	X	MOVB #$BYTE ADDR[n] MOVW #$WORD ADDR[n]
Word accesses of ADDR[n] only	ADDR[n]	0	1	0	MOVW #$WORD ADDR[n] LDD ADDR[n]
Byte accesses of ADDR[n] only	ADDR[n]	0	1	1	MOVB #$BYTE ADDR[n] LDAB ADDR[n]

1. A word access of ADDR[n-1] also accesses ADDR[n] but does not generate a match.
The comparator address register must contain the exact address from the code.

Access direction can also be used to qualify a match for Comparator B in the same way as described for Comparator C in Table 6-32.

6.4.2.1.3 Comparator A

Comparator A offers address, direction (R/W), access size (word/byte) and data bus comparison.

Table 6-34 lists access considerations with data bus comparison. On word accesses the data byte of the lower address is mapped to DBGADH. Access direction can also be used to qualify a match for Comparator A in the same way as described for Comparator C in Table 6-32.

Table 6-34. Comparator A Matches When Accessing ADDR[n]

SZE	SZ	DBGADHM, DBGADLM	Access DH=DBGADH, DL=DBGADL	Comment
0	X	$0000	Byte Word	No databus comparison
0	X	$FF00	Byte, data(ADDR[n])=DH Word, data(ADDR[n])=DH, data(ADDR[n+1])=X	Match data(ADDR[n])
0	X	$00FF	Word, data(ADDR[n])=X, data(ADDR[n+1])=DL	Match data(ADDR[n+1])
0	X	$00FF	Byte, data(ADDR[n])=X, data(ADDR[n+1])=DL	Possible unintended match
0	X	$FFFF	Word, data(ADDR[n])=DH, data(ADDR[n+1])=DL	Match data(ADDR[n], ADDR[n+1])
0	X	$FFFF	Byte, data(ADDR[n])=DH, data(ADDR[n+1])=DL	Possible unintended match
1	0	$0000	Word	No databus comparison
1	0	$00FF	Word, data(ADDR[n])=X, data(ADDR[n+1])=DL	Match only data at ADDR[n+1]
1	0	$FF00	Word, data(ADDR[n])=DH, data(ADDR[n+1])=X	Match only data at ADDR[n]
1	0	$FFFF	Word, data(ADDR[n])=DH, data(ADDR[n+1])=DL	Match data at ADDR[n] & ADDR[n+1]
1	1	$0000	Byte	No databus comparison
1	1	$FF00	Byte, data(ADDR[n])=DH	Match data at ADDR[n]

6.4.2.1.4 Comparator A Data Bus Comparison NDB Dependency

Comparator A features an NDB control bit, which allows data bus comparators to be configured to either trigger on equivalence or trigger on difference. This allows monitoring of a difference in the contents of an address location from an expected value.

When matching on an equivalence (NDB=0), each individual data bus bit position can be masked out by clearing the corresponding mask bit (DBGADHM/DBGADLM) so that it is ignored in the comparison. A match occurs when all data bus bits with corresponding mask bits set are equivalent. If all mask register bits are clear, then a match is based on the address bus only, the data bus is ignored.

When matching on a difference, mask bits can be cleared to ignore bit positions. A match occurs when any data bus bit with corresponding mask bit set is different. Clearing all mask bits, causes all bits to be ignored and prevents a match because no difference can be detected. In this case address bus equivalence does not cause a match.

Table 6-35. NDB and MASK bit dependency

NDB	DBGADHM[n] / DBGADLM[n]	Comment
0	0	Do not compare data bus bit.
0	1	Compare data bus bit. Match on equivalence.
1	0	Do not compare data bus bit.
1	1	Compare data bus bit. Match on difference.

6.4.2.2 Range Comparisons

Using the AB comparator pair for a range comparison, the data bus can also be used for qualification by using the comparator A data registers. Furthermore the DBGACTL RW and RWE bits can be used to qualify the range comparison on either a read or a write access. The corresponding DBGBCTL bits are ignored. The SZE and SZ control bits are ignored in range mode. The comparator A TAG bit is used to tag range comparisons. The comparator B TAG bit is ignored in range modes. In order for a range comparison using comparators A and B, both COMPEA and COMPEB must be set; to disable range comparisons both must be cleared. The comparator A BRK bit is used to for the AB range, the comparator B BRK bit is ignored in range mode.

When configured for range comparisons and tagging, the ranges are accurate only to word boundaries.

6.4.2.2.1 Inside Range (CompA_Addr ≤ address ≤ CompB_Addr)

In the Inside Range comparator mode, comparator pair A and B can be configured for range comparisons. This configuration depends upon the control register (DBGC2). The match condition requires that a valid match for both comparators happens on the same bus cycle. A match condition on only one comparator is not valid. An aligned word access which straddles the range boundary is valid only if the aligned address is inside the range.

6.4.2.2.2 Outside Range (address < CompA_Addr or address > CompB_Addr)

In the Outside Range comparator mode, comparator pair A and B can be configured for range comparisons. A single match condition on either of the comparators is recognized as valid. An aligned word access which straddles the range boundary is valid only if the aligned address is outside the range.

Outside range mode in combination with tagging can be used to detect if the opcode fetches are from an unexpected range. In forced match mode the outside range match would typically be activated at any interrupt vector fetch or register access. This can be avoided by setting the upper range limit to $3FFFF or lower range limit to $00000 respectively.

6.4.3 Match Modes (Forced or Tagged)

Match modes are used as qualifiers for a state sequencer change of state. The Comparator control register TAG bits select the match mode. The modes are described in the following sections.

6.4.3.1 Forced Match

When configured for forced matching, a comparator channel match can immediately initiate a transition to the next state sequencer state whereby the corresponding flags in DBGSR are set. The state control register for the current state determines the next state. Forced matches are typically generated 2-3 bus cycles after the final matching address bus cycle, independent of comparator RWE/RW settings. Furthermore since opcode fetches occur several cycles before the opcode execution a forced match of an opcode address typically precedes a tagged match at the same address.

6.4.3.2 Tagged Match

If a CPU taghit occurs a transition to another state sequencer state is initiated and the corresponding DBGSR flags are set. For a comparator related taghit to occur, the DBG must first attach tags to instructions as they are fetched from memory. When the tagged instruction reaches the execution stage of the instruction queue a taghit is generated by the CPU. This can initiate a state sequencer transition.

6.4.3.3 Immediate Trigger

Independent of comparator matches it is possible to initiate a tracing session and/or breakpoint by writing to the TRIG bit in DBGC1. If configured for begin aligned tracing, this triggers the state sequencer into the Final State, if configured for end alignment, setting the TRIG bit disarms the module, ending the session and issues a forced breakpoint request to the CPU.

It is possible to set both TRIG and ARM simultaneously to generate an immediate trigger, independent of the current state of ARM.

6.4.3.4 Channel Priorities

In case of simultaneous matches the priority is resolved according to Table 6-36. The lower priority is suppressed. It is thus possible to miss a lower priority match if it occurs simultaneously with a higher priority. The priorities described in Table 6-36 dictate that in the case of simultaneous matches, the match pointing to final state has highest priority followed by the lower channel number (0,1,2).

Table 6-36. Channel Priorities

Priority	Source	Action
Highest	**TRIG**	Enter Final State
	Channel pointing to Final State	Transition to next state as defined by state control registers
	Match0 (force or tag hit)	Transition to next state as defined by state control registers
	Match1 (force or tag hit)	Transition to next state as defined by state control registers
Lowest	**Match2 (force or tag hit)**	Transition to next state as defined by state control registers

6.4.4 State Sequence Control

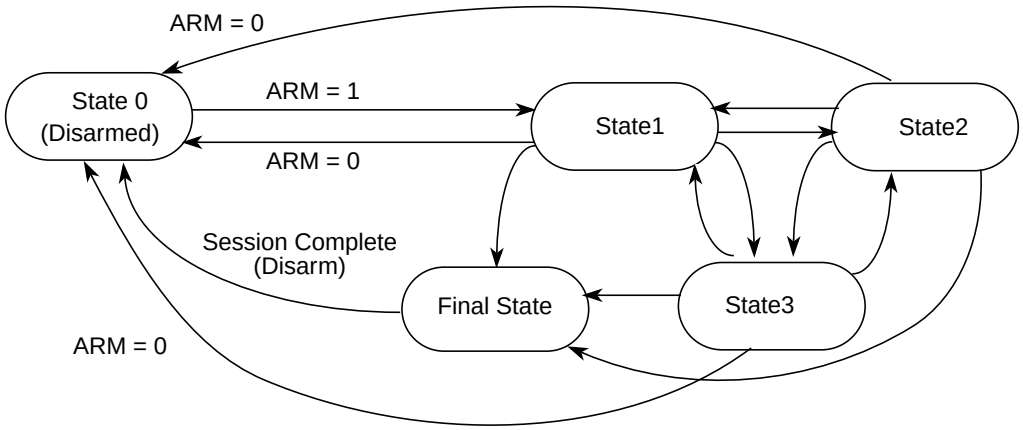

Figure 6-24. State Sequencer Diagram

The state sequencer allows a defined sequence of events to provide a trigger point for tracing of data in the trace buffer. Once the DBG module has been armed by setting the ARM bit in the DBGC1 register, then state1 of the state sequencer is entered. Further transitions between the states are then controlled by the state control registers and channel matches. From Final State the only permitted transition is back to the disarmed state0. Transition between any of the states 1 to 3 is not restricted. Each transition updates the SSF[2:0] flags in DBGSR accordingly to indicate the current state.

Alternatively writing to the TRIG bit in DBGSC1, provides an immediate trigger independent of comparator matches.

Independent of the state sequencer, each comparator channel can be individually configured to generate an immediate breakpoint when a match occurs through the use of the BRK bits in the DBGxCTL registers. Thus it is possible to generate an immediate breakpoint on selected channels, whilst a state sequencer transition can be initiated by a match on other channels. If a debug session is ended by a match on a channel the state sequencer transitions through Final State for a clock cycle to state0. This is independent of tracing and breakpoint activity, thus with tracing and breakpoints disabled, the state sequencer enters state0 and the debug module is disarmed.

6.4.4.1 Final State

On entering Final State a trigger may be issued to the trace buffer according to the trace alignment control as defined by the TALIGN bit (see 6.3.2.3”). If the TSOURCE bit in DBGTCR is clear then the trace buffer

is disabled and the transition to Final State can only generate a breakpoint request. In this case or upon completion of a tracing session when tracing is enabled, the ARM bit in the DBGC1 register is cleared, returning the module to the disarmed state0. If tracing is enabled a breakpoint request can occur at the end of the tracing session. If neither tracing nor breakpoints are enabled then when the final state is reached it returns automatically to state0 and the debug module is disarmed.

6.4.5 Trace Buffer Operation

The trace buffer is a 64 lines deep by 20-bits wide RAM array. The DBG module stores trace information in the RAM array in a circular buffer format. The system accesses the RAM array through a register window (DBGTBH:DBGTBL) using 16-bit wide word accesses. After each complete 20-bit trace buffer line is read, an internal pointer into the RAM increments so that the next read receives fresh information. Data is stored in the format shown in Table 6-37 and Table 6-40. After each store the counter register DBGCNT is incremented. Tracing of CPU activity is disabled when the BDM is active. Reading the trace buffer whilst the DBG is armed returns invalid data and the trace buffer pointer is not incremented.

6.4.5.1 Trace Trigger Alignment

Using the TALIGN bit (see 6.3.2.3) it is possible to align the trigger with the end or the beginning of a tracing session.

If end alignment is selected, tracing begins when the ARM bit in DBGC1 is set and State1 is entered; the transition to Final State signals the end of the tracing session. Tracing with Begin-Trigger starts at the opcode of the trigger. Using end alignment or when the tracing is initiated by writing to the TRIG bit whilst configured for begin alignment, tracing starts in the second cycle after the DBGC1 write cycle.

6.4.5.1.1 Storing with Begin Trigger Alignment

Storing with begin alignment, data is not stored in the Trace Buffer until the Final State is entered. Once the trigger condition is met the DBG module remains armed until 64 lines are stored in the Trace Buffer. If the trigger is at the address of the change-of-flow instruction the change of flow associated with the trigger is stored in the Trace Buffer. Using begin alignment together with tagging, if the tagged instruction is about to be executed then the trace is started. Upon completion of the tracing session the breakpoint is generated, thus the breakpoint does not occur at the tagged instruction boundary.

6.4.5.1.2 Storing with End Trigger Alignment

Storing with end alignment, data is stored in the Trace Buffer until the Final State is entered, at which point the DBG module becomes disarmed and no more data is stored. If the trigger is at the address of a change of flow instruction, the trigger event is not stored in the Trace Buffer. If all trace buffer lines have been used before a trigger event occurrs then the trace continues at the first line, overwriting the oldest entries.

6.4.5.2 Trace Modes

Four trace modes are available. The mode is selected using the TRCMOD bits in the DBGTCR register. Tracing is enabled using the TSOURCE bit in the DBGTCR register. The modes are described in the following subsections.

6.4.5.2.1 Normal Mode

In Normal Mode, change of flow (COF) program counter (PC) addresses are stored.

COF addresses are defined as follows:

- Source address of taken conditional branches (long, short, bit-conditional, and loop primitives)
- Destination address of indexed JMP, JSR, and CALL instruction
- Destination address of RTI, RTS, and RTC instructions
- Vector address of interrupts, except for BDM vectors

LBRA, BRA, BSR, BGND as well as non-indexed JMP, JSR, and CALL instructions are not classified as change of flow and are not stored in the trace buffer.

Stored information includes the full 18-bit address bus and information bits, which contains a source/destination bit to indicate whether the stored address was a source address or destination address.

NOTE

When a COF instruction with destination address is executed, the destination address is stored to the trace buffer on instruction completion, indicating the COF has taken place. If an interrupt occurs simultaneously then the next instruction carried out is actually from the interrupt service routine. The instruction at the destination address of the original program flow gets executed after the interrupt service routine.

In the following example an IRQ interrupt occurs during execution of the indexed JMP at address MARK1. The BRN at the destination (SUB_1) is not executed until after the IRQ service routine but the destination address is entered into the trace buffer to indicate that the indexed JMP COF has taken place.

```
         LDX     #SUB_1
MARK1    JMP     0,X                    ; IRQ interrupt occurs during execution of this
MARK2    NOP                            ;

SUB_1    BRN     *                      ; JMP Destination address TRACE BUFFER ENTRY 1
                                        ; RTI Destination address TRACE BUFFER ENTRY 3
         NOP                            ;
ADDR1    DBNE    A,PART5                ; Source address TRACE BUFFER ENTRY 4

IRQ_ISR  LDAB    #$F0                   ; IRQ Vector $FFF2 = TRACE BUFFER ENTRY 2
         STAB    VAR_C1
         RTI                            ;
```

The execution flow taking into account the IRQ is as follows

```
         LDX     #SUB_1
MARK1    JMP     0,X                    ;
IRQ_ISR  LDAB    #$F0                   ;
         STAB    VAR_C1
         RTI                            ;
SUB_1    BRN     *
         NOP                            ;
ADDR1    DBNE    A,PART5                ;
```

6.4.5.2.2 Loop1 Mode

Loop1 Mode, similarly to Normal Mode also stores only COF address information to the trace buffer, it however allows the filtering out of redundant information.

The intent of Loop1 Mode is to prevent the Trace Buffer from being filled entirely with duplicate information from a looping construct such as delays using the DBNE instruction or polling loops using BRSET/BRCLR instructions. Immediately after address information is placed in the Trace Buffer, the DBG module writes this value into a background register. This prevents consecutive duplicate address entries in the Trace Buffer resulting from repeated branches.

Loop1 Mode only inhibits consecutive duplicate source address entries that would typically be stored in most tight looping constructs. It does not inhibit repeated entries of destination addresses or vector addresses, since repeated entries of these would most likely indicate a bug in the user's code that the DBG module is designed to help find.

6.4.5.2.3 Detail Mode

In Detail Mode, address and data for all memory and register accesses is stored in the trace buffer. This mode is intended to supply additional information on indexed, indirect addressing modes where storing only the destination address would not provide all information required for a user to determine where the code is in error. This mode also features information bit storage to the trace buffer, for each address byte storage. The information bits indicate the size of access (word or byte) and the type of access (read or write).

When tracing in Detail Mode, all cycles are traced except those when the CPU is either in a free or opcode fetch cycle.

6.4.5.2.4 Compressed Pure PC Mode

In Compressed Pure PC Mode, the PC addresses of all executed opcodes, including illegal opcodes are stored. A compressed storage format is used to increase the effective depth of the trace buffer. This is achieved by storing the lower order bits each time and using 2 information bits to indicate if a 64 byte boundary has been crossed, in which case the full PC is stored.

Each Trace Buffer row consists of 2 information bits and 18 PC address bits

NOTE:

When tracing is terminated using forced breakpoints, latency in breakpoint generation means that opcodes following the opcode causing the breakpoint can be stored to the trace buffer. The number of opcodes is dependent on program flow. This can be avoided by using tagged breakpoints.

6.4.5.3 Trace Buffer Organization (Normal, Loop1, Detail modes)

ADRH, ADRM, ADRL denote address high, middle and low byte respectively. The numerical suffix refers to the tracing count. The information format for Loop1 and Normal modes is identical. In Detail mode, the address and data for each entry are stored on consecutive lines, thus the maximum number of entries is 32. In this case DBGCNT bits are incremented twice, once for the address line and once for the data line, on

each trace buffer entry. In Detail mode CINF comprises of R/W and size access information (CRW and CSZ respectively).

Single byte data accesses in Detail Mode are always stored to the low byte of the trace buffer (DATAL) and the high byte is cleared. When tracing word accesses, the byte at the lower address is always stored to trace buffer byte1 and the byte at the higher address is stored to byte0.

Table 6-37. Trace Buffer Organization (Normal,Loop1,Detail modes)

Mode	Entry Number	4-bits	8-bits	8-bits
		Field 2	Field 1	Field 0
Detail Mode	Entry 1	CINF1,ADRH1	ADRM1	ADRL1
		0	DATAH1	DATAL1
	Entry 2	CINF2,ADRH2	ADRM2	ADRL2
		0	DATAH2	DATAL2
Normal/Loop1 Modes	Entry 1	PCH1	PCM1	PCL1
	Entry 2	PCH2	PCM2	PCL2

6.4.5.3.1 Information Bit Organization

The format of the bits is dependent upon the active trace mode as described below.

Field2 Bits in Detail Mode

Bit 3	Bit 2	Bit 1	Bit 0
CSZ	CRW	ADDR[17]	ADDR[16]

Figure 6-25. Field2 Bits in Detail Mode

In Detail Mode the CSZ and CRW bits indicate the type of access being made by the CPU.

Table 6-38. Field Descriptions

Bit	Description
3 CSZ	**Access Type Indicator**— This bit indicates if the access was a byte or word size when tracing in Detail Mode 0 Word Access 1 Byte Access
2 CRW	**Read Write Indicator** — This bit indicates if the corresponding stored address corresponds to a read or write access when tracing in Detail Mode. 0 Write Access 1 Read Access
1 ADDR[17]	**Address Bus bit 17**— Corresponds to system address bus bit 17.
0 ADDR[16]	**Address Bus bit 16**— Corresponds to system address bus bit 16.

Field2 Bits in Normal and Loop1 Modes

Bit 3	Bit 2	Bit 1	Bit 0
CSD	CVA	PC17	PC16

Figure 6-26. Information Bits PCH

Table 6-39. PCH Field Descriptions

Bit	Description
3 CSD	**Source Destination Indicator** — In Normal and Loop1 mode this bit indicates if the corresponding stored address is a source or destination address. This bit has no meaning in Compressed Pure PC mode. 0 Source Address 1 Destination Address
2 CVA	**Vector Indicator** — In Normal and Loop1 mode this bit indicates if the corresponding stored address is a vector address. Vector addresses are destination addresses, thus if CVA is set, then the corresponding CSD is also set. This bit has no meaning in Compressed Pure PC mode. 0 Non-Vector Destination Address 1 Vector Destination Address
1 PC17	**Program Counter bit 17**— In Normal and Loop1 mode this bit corresponds to program counter bit 17.
0 PC16	**Program Counter bit 16**— In Normal and Loop1 mode this bit corresponds to program counter bit 16.

6.4.5.4 Trace Buffer Organization (Compressed Pure PC mode)

Table 6-40. Trace Buffer Organization Example (Compressed PurePC mode)

Mode	Line Number	2-bits	6-bits	6-bits	6-bits
		Field 3	Field 2	Field 1	Field 0
Compressed Pure PC Mode	Line 1	00	PC1 (Initial 18-bit PC Base Address)		
	Line 2	11	PC4	PC3	PC2
	Line 3	01	0	0	PC5
	Line 4	00	PC6 (New 18-bit PC Base Address)		
	Line 5	10	0	PC8	PC7
	Line 6	00	PC9 (New 18-bit PC Base Address)		

NOTE

Configured for end aligned triggering in compressed PurePC mode, then after rollover it is possible that the oldest base address is overwritten. In this case all entries between the pointer and the next base address have lost their base address following rollover. For example in Table 6-40 if one line of rollover has occurred, Line 1, PC1, is overwritten with a new entry. Thus the entries on Lines 2 and 3 have lost their base address. For reconstruction of program flow the first base address following the pointer must be used, in the example, Line 4. The pointer points to the oldest entry, Line 2.

Field3 Bits in Compressed Pure PC Modes

Table 6-41. Compressed Pure PC Mode Field 3 Information Bit Encoding

INF1	INF0	TRACE BUFFER ROW CONTENT
0	0	Base PC address TB[17:0] contains a full PC[17:0] value
0	1	Trace Buffer[5:0] contain incremental PC relative to base address zero value
1	0	Trace Buffer[11:0] contain next 2 incremental PCs relative to base address zero value
1	1	Trace Buffer[17:0] contain next 3 incremental PCs relative to base address zero value

Each time that PC[17:6] differs from the previous base PC[17:6], then a new base address is stored. The base address zero value is the lowest address in the 64 address range

The first line of the trace buffer always gets a base PC address, this applies also on rollover.

6.4.5.5 Reading Data from Trace Buffer

The data stored in the Trace Buffer can be read provided the DBG module is not armed, is configured for tracing (TSOURCE bit is set) and the system not secured. When the ARM bit is written to 1 the trace buffer is locked to prevent reading. The trace buffer can only be unlocked for reading by a single aligned word write to DBGTB when the module is disarmed.

The Trace Buffer can only be read through the DBGTB register using aligned word reads, any byte or misaligned reads return 0 and do not cause the trace buffer pointer to increment to the next trace buffer address. The Trace Buffer data is read out first-in first-out. By reading CNT in DBGCNT the number of valid lines can be determined. DBGCNT does not decrement as data is read.

Whilst reading an internal pointer is used to determine the next line to be read. After a tracing session, the pointer points to the oldest data entry, thus if no rollover has occurred, the pointer points to line0, otherwise it points to the line with the oldest entry. In compressed Pure PC mode on rollover the line with the oldest data entry may also contain newer data entries in fields 0 and 1. Thus if rollover is indicated by the TBF bit, the line status must be decoded using the INF bits in field3 of that line. If both INF bits are clear then the line contains only entries from before the last rollover.
If INF0=1 then field 0 contains post rollover data but fields 1 and 2 contain pre rollover data.
If INF1=1 then fields 0 and 1 contain post rollover data but field 2 contains pre rollover data.

The pointer is initialized by each aligned write to DBGTBH to point to the oldest data again. This enables an interrupted trace buffer read sequence to be easily restarted from the oldest data entry.

The least significant word of line is read out first. This corresponds to the fields 1 and 0 of Table 6-37. The next word read returns field 2 in the least significant bits [3:0] and “0” for bits [15:4].

Reading the Trace Buffer while the DBG module is armed returns invalid data and no shifting of the RAM pointer occurs.

6.4.5.6 Trace Buffer Reset State

The Trace Buffer contents and DBGCNT bits are not initialized by a system reset. Thus should a system reset occur, the trace session information from immediately before the reset occurred can be read out and the number of valid lines in the trace buffer is indicated by DBGCNT. The internal pointer to the current

trace buffer address is initialized by unlocking the trace buffer and points to the oldest valid data even if a reset occurred during the tracing session. To read the trace buffer after a reset, TSOURCE must be set, otherwise the trace buffer reads as all zeroes. Generally debugging occurrences of system resets is best handled using end trigger alignment since the reset may occur before the trace trigger, which in the begin trigger alignment case means no information would be stored in the trace buffer.

The Trace Buffer contents and DBGCNT bits are undefined following a POR.

NOTE

An external pin RESET that occurs simultaneous to a trace buffer entry can, in very seldom cases, lead to either that entry being corrupted or the first entry of the session being corrupted. In such cases the other contents of the trace buffer still contain valid tracing information. The case occurs when the reset assertion coincides with the trace buffer entry clock edge.

6.4.6 Tagging

A tag follows program information as it advances through the instruction queue. When a tagged instruction reaches the head of the queue a tag hit occurs and can initiate a state sequencer transition.

Each comparator control register features a TAG bit, which controls whether the comparator match causes a state sequencer transition immediately or tags the opcode at the matched address. If a comparator is enabled for tagged comparisons, the address stored in the comparator match address registers must be an opcode address.

Using Begin trigger together with tagging, if the tagged instruction is about to be executed then the transition to the next state sequencer state occurs. If the transition is to the Final State, tracing is started. Only upon completion of the tracing session can a breakpoint be generated. Using End alignment, when the tagged instruction is about to be executed and the next transition is to Final State then a breakpoint is generated immediately, before the tagged instruction is carried out.

R/W monitoring, access size (SZ) monitoring and data bus monitoring are not useful if tagging is selected, since the tag is attached to the opcode at the matched address and is not dependent on the data bus nor on the type of access. Thus these bits are ignored if tagging is selected.

When configured for range comparisons and tagging, the ranges are accurate only to word boundaries.

Tagging is disabled when the BDM becomes active.

6.4.7 Breakpoints

It is possible to generate breakpoints from channel transitions to final state or using software to write to the TRIG bit in the DBGC1 register.

6.4.7.1 Breakpoints From Comparator Channels

Breakpoints can be generated when the state sequencer transitions to the Final State. If configured for tagging, then the breakpoint is generated when the tagged opcode reaches the execution stage of the instruction queue.

If a tracing session is selected by the TSOURCE bit, breakpoints are requested when the tracing session has completed, thus if Begin aligned triggering is selected, the breakpoint is requested only on completion of the subsequent trace (see Table 6-42). If no tracing session is selected, breakpoints are requested immediately.

If the BRK bit is set, then the associated breakpoint is generated immediately independent of tracing trigger alignment.

Table 6-42. Breakpoint Setup For CPU Breakpoints

BRK	TALIGN	DBGBRK	Breakpoint Alignment
0	0	0	Fill Trace Buffer until trigger then disarm (no breakpoints)
0	0	1	Fill Trace Buffer until trigger, then breakpoint request occurs
0	1	0	Start Trace Buffer at trigger (no breakpoints)
0	1	1	Start Trace Buffer at trigger A breakpoint request occurs when Trace Buffer is full
1	x	1	Terminate tracing and generate breakpoint immediately on trigger
1	x	0	Terminate tracing immediately on trigger

6.4.7.2 Breakpoints Generated Via The TRIG Bit

If a TRIG triggers occur, the Final State is entered whereby tracing trigger alignment is defined by the TALIGN bit. If a tracing session is selected by the TSOURCE bit, breakpoints are requested when the tracing session has completed, thus if Begin aligned triggering is selected, the breakpoint is requested only on completion of the subsequent trace (see Table 6-42). If no tracing session is selected, breakpoints are requested immediately. TRIG breakpoints are possible with a single write to DBGC1, setting ARM and TRIG simultaneously.

6.4.7.3 Breakpoint Priorities

If a TRIG trigger occurs after Begin aligned tracing has already started, then the TRIG no longer has an effect. When the associated tracing session is complete, the breakpoint occurs. Similarly if a TRIG is followed by a subsequent comparator channel match, it has no effect, since tracing has already started.

If a forced SWI breakpoint coincides with a BGND in user code with BDM enabled, then the BDM is activated by the BGND and the breakpoint to SWI is suppressed.

6.4.7.3.1 DBG Breakpoint Priorities And BDM Interfacing

Breakpoint operation is dependent on the state of the BDM module. If the BDM module is active, the CPU is executing out of BDM firmware, thus comparator matches and associated breakpoints are disabled. In addition, while executing a BDM TRACE command, tagging into BDM is disabled. If BDM is not active, the breakpoint gives priority to BDM requests over SWI requests if the breakpoint happens to coincide with a SWI instruction in user code. On returning from BDM, the SWI from user code gets executed.

Table 6-43. Breakpoint Mapping Summary

DBGBRK	BDM Bit (DBGC1[4])	BDM Enabled	BDM Active	Breakpoint Mapping
0	X	X	X	No Breakpoint
1	0	X	0	Breakpoint to SWI
X	X	1	1	No Breakpoint
1	1	0	X	Breakpoint to SWI
1	1	1	0	Breakpoint to BDM

BDM cannot be entered from a breakpoint unless the ENABLE bit is set in the BDM. If entry to BDM via a BGND instruction is attempted and the ENABLE bit in the BDM is cleared, the CPU actually executes the BDM firmware code, checks the ENABLE and returns if ENABLE is not set. If not serviced by the monitor then the breakpoint is re-asserted when the BDM returns to normal CPU flow.

If the comparator register contents coincide with the SWI/BDM vector address then an SWI in user code could coincide with a DBG breakpoint. The CPU ensures that BDM requests have a higher priority than SWI requests. Returning from the BDM/SWI service routine care must be taken to avoid a repeated breakpoint at the same address.

Should a tagged or forced breakpoint coincide with a BGND in user code, then the instruction that follows the BGND instruction is the first instruction executed when normal program execution resumes.

NOTE

When program control returns from a tagged breakpoint using an RTI or BDM GO command without program counter modification it returns to the instruction whose tag generated the breakpoint. To avoid a repeated breakpoint at the same location reconfigure the DBG module in the SWI routine, if configured for an SWI breakpoint, or over the BDM interface by executing a TRACE command before the GO to increment the program flow past the tagged instruction.

6.5 Application Information

6.5.1 State Machine scenarios

Defining the state control registers as SCR1,SCR2, SCR3 and M0,M1,M2 as matches on channels 0,1,2 respectively. SCR encoding supported by S12SDBGV1 are shown in black. SCR encoding supported only in S12SDBGV2 are shown in red. For backwards compatibility the new scenarios use a 4th bit in each SCR register. Thus the existing encoding for SCRx[2:0] is not changed.

6.5.2 Scenario 1

A trigger is generated if a given sequence of 3 code events is executed.

Figure 6-27. Scenario 1

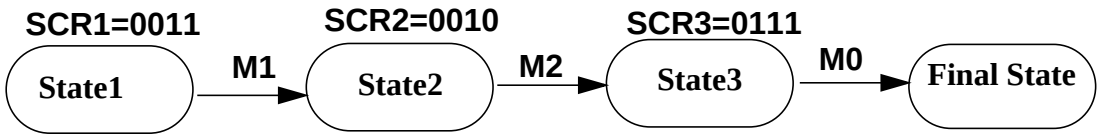

Scenario 1 is possible with S12SDBGV1 SCR encoding

6.5.3 Scenario 2

A trigger is generated if a given sequence of 2 code events is executed.

Figure 6-28. Scenario 2a



A trigger is generated if a given sequence of 2 code events is executed, whereby the first event is entry into a range (COMPA,COMPB configured for range mode). M1 is disabled in range modes.

Figure 6-29. Scenario 2b



A trigger is generated if a given sequence of 2 code events is executed, whereby the second event is entry into a range (COMPA,COMPB configured for range mode)

Figure 6-30. Scenario 2c



All 3 scenarios 2a,2b,2c are possible with the S12SDBGV1 SCR encoding

6.5.4 Scenario 3

A trigger is generated immediately when one of up to 3 given events occurs

Figure 6-31. Scenario 3

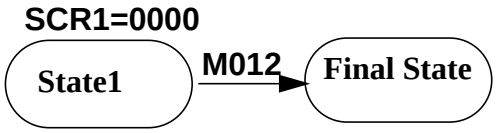

Scenario 3 is possible with S12SDBGV1 SCR encoding

6.5.5 Scenario 4

Trigger if a sequence of 2 events is carried out in an incorrect order. Event A must be followed by event B and event B must be followed by event A. 2 consecutive occurrences of event A without an intermediate event B cause a trigger. Similarly 2 consecutive occurrences of event B without an intermediate event A cause a trigger. This is possible by using CompA and CompC to match on the same address as shown.

Figure 6-32. Scenario 4a

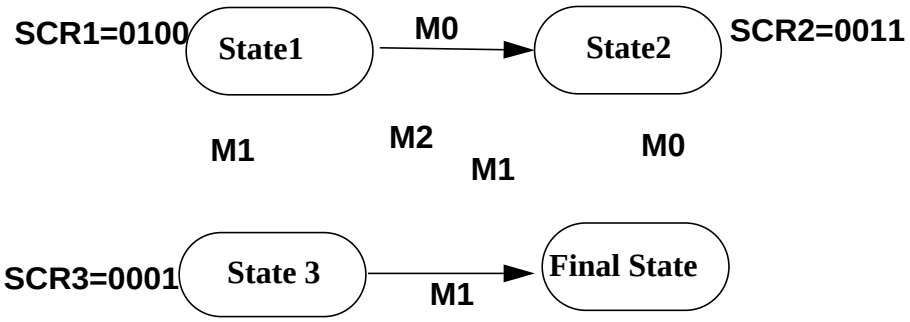

This scenario is currently not possible using 2 comparators only. S12SDBGV2 makes it possible with 2 comparators, State 3 allowing a M0 to return to state 2, whilst a M2 leads to final state as shown.

Figure 6-33. Scenario 4b (with 2 comparators)

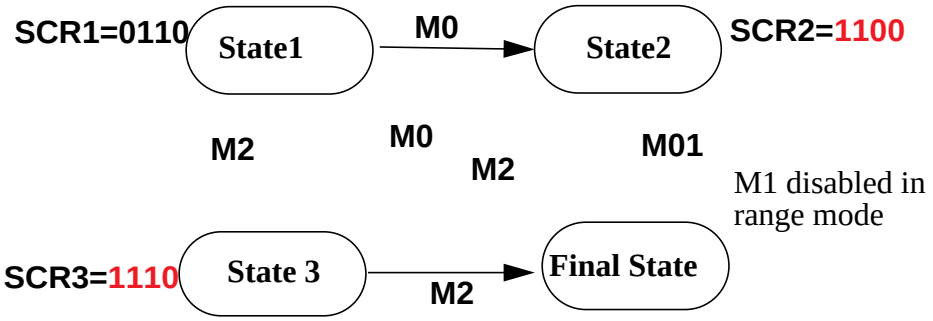

The advantage of using only 2 channels is that now range comparisons can be included (channel0)

This however violates the S12SDBGV1 specification, which states that a match leading to final state always has priority in case of a simultaneous match, whilst priority is also given to the lowest channel number. For S12SDBG the corresponding CPU priority decoder is removed to support this, such that on simultaneous taghits, taghits pointing to final state have highest priority. If no taghit points to final state then the lowest channel number has priority. Thus with the above encoding from State3, the CPU and DBG would break on a simultaneous M0/M2.

6.5.6 Scenario 5

Trigger if following event A, event C precedes event B. i.e. the expected execution flow is A->B->C.

Figure 6-34. Scenario 5

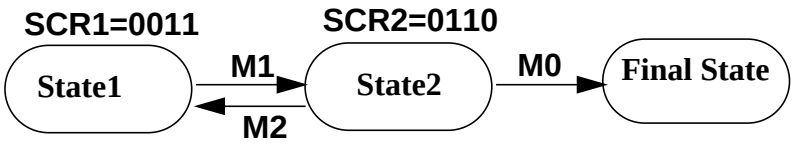

Scenario 5 is possible with the S12SDBGV1 SCR encoding

6.5.7 Scenario 6

Trigger if event A occurs twice in succession before any of 2 other events (BC) occurs. This scenario is not possible using the S12SDBGV1 SCR encoding. S12SDBGV2 includes additions shown in red. The change in SCR1 encoding also has the advantage that a State1->State3 transition using M0 is now possible. This is advantageous because range and data bus comparisons use channel0 only.

Figure 6-35. Scenario 6

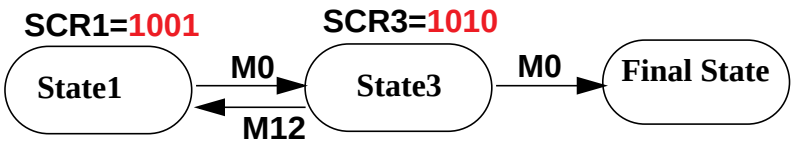

6.5.8 Scenario 7

Trigger when a series of 3 events is executed out of order. Specifying the event order as M1,M2,M0 to run in loops (120120120). Any deviation from that order should trigger. This scenario is not possible using the

S12SDBGV1 SCR encoding because OR possibilities are very limited in the channel encoding. By adding OR forks as shown in red this scenario is possible.

Figure 6-36. Scenario 7

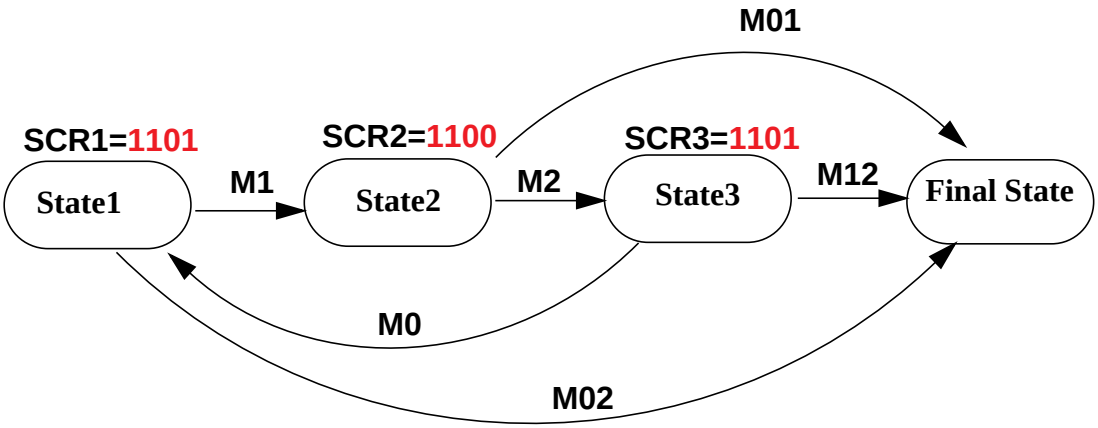

On simultaneous matches the lowest channel number has priority so with this configuration the forking from State1 has the peculiar effect that a simultaneous match0/match1 transitions to final state but a simultaneous match2/match1transitions to state2.

6.5.9 Scenario 8

Trigger when a routine/event at M2 follows either M1 or M0.

Figure 6-37. Scenario 8a



Trigger when an event M2 is followed by either event M0 or event M1

Figure 6-38. Scenario 8b



Scenario 8a and 8b are possible with the S12SDBGV1 and S12SDBGV2 SCR encoding

6.5.10 Scenario 9

Trigger when a routine/event at A (M2) does not follow either B or C (M1 or M0) before they are executed again. This cannot be realized with theS12SDBGV1 SCR encoding due to OR limitations. By changing the SCR2 encoding as shown in red this scenario becomes possible.

Figure 6-39. Scenario 9



6.5.11 Scenario 10

Trigger if an event M0 occurs following up to two successive M2 events without the resetting event M1. As shown up to 2 consecutive M2 events are allowed, whereby a reset to State1 is possible after either one or two M2 events. If an event M0 occurs following the second M2, before M1 resets to State1 then a trigger is generated. Configuring CompA and CompC the same, it is possible to generate a breakpoint on the third consecutive occurrence of event M0 without a reset M1.

Figure 6-40. Scenario 10a

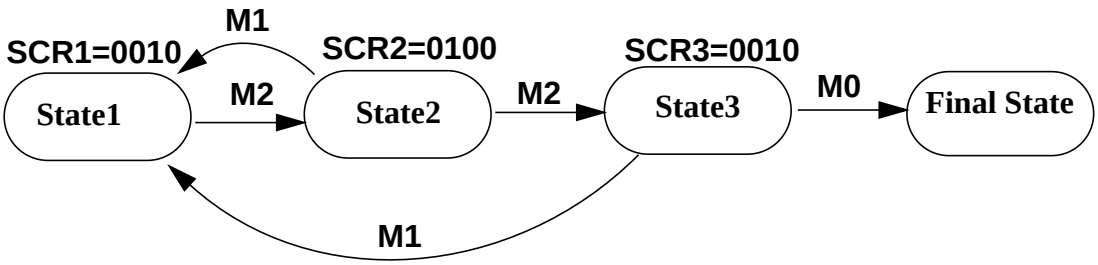

Figure 6-41. Scenario 10b

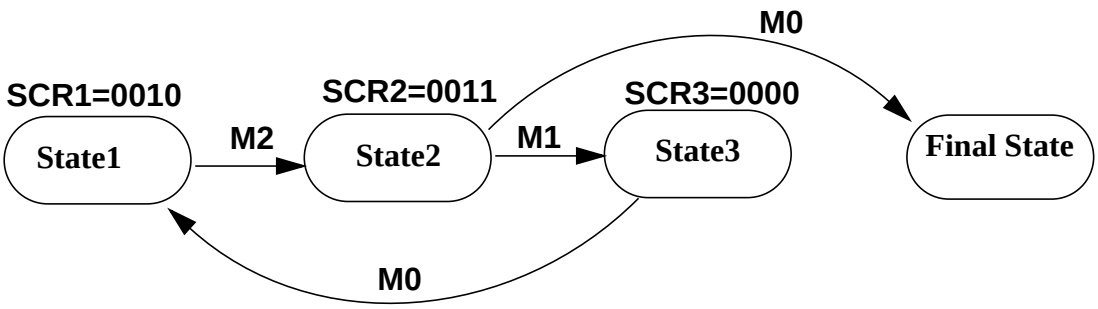

Scenario 10b shows the case that after M2 then M1 must occur before M0. Starting from a particular point in code, event M2 must always be followed by M1 before M0. If after any M2, event M0 occurs before M1 then a trigger is generated.

Chapter 7
S12 Clock, Reset and Power Management Unit (S12CPMU)

Revision History

Version Number	Revision Date	Effective Date	Author	Description of Changes
V01.00	16 Jan.07	16 Jan. 07		Initial release
V01.01	9 July 08	9 July 08		added IRCLK to Block Diagram
V01.02	7 Oct. 08	7 Oct. 08		clarified and detailed oscillator filter functionality
V01.03	11 Dec. 08	11 Dec. 08		added note, that startup time of external oscillator t_{UPOSC} must be considered, especially when entering Pseudo Stop Mode
V01.04	17 Jun. 09	17 Jun. 09		Modified reset phase descriptions to reference f_{VCORST} instead of f_{PLLRST} and correct typo of RESET pin sample point from 64 to 256 cycles in section: Description of Reset Operation
V01.05	27 Apr. 10	27 Apr. 10		Major rework fixing typos, figures and tables and improved description of Adaptive Oscillator Filter.

7.1 Introduction

This specification describes the function of the Clock, Reset and Power Management Unit (S12CPMU).

- The Pierce oscillator (OSCLCP) provides a robust, low-noise and low-power external clock source. It is designed for optimal start-up margin with typical crystal oscillators.
- The Voltage regulator (IVREG) operates from the range 3.13V to 5.5V. It provides all the required chip internal voltages and voltage monitors.
- The Phase Locked Loop (PLL) provides a highly accurate frequency multiplier with internal filter.
- The Internal Reference Clock (IRC1M) provides a1MHz clock.

7.1.1 Features

The Pierce Oscillator (OSCLCP) contains circuitry to dynamically control current gain in the output amplitude. This ensures a signal with low harmonic distortion, low power and good noise immunity.

- Supports crystals or resonators from 4MHz to 16MHz.

- High noise immunity due to input hysteresis and spike filtering.
- Low RF emissions with peak-to-peak swing limited dynamically
- Transconductance (gm) sized for optimum start-up margin for typical crystals
- Dynamic gain control eliminates the need for external current limiting resistor
- Integrated resistor eliminates the need for external bias resistor.
- Low power consumption: Operates from internal 1.8V (nominal) supply, Amplitude control limits power

The Voltage Regulator (IVREG) has the following features:

- Input voltage range from 3.13V to 5.5V
- Low-voltage detect (LVD) with low-voltage interrupt (LVI)
- Power-on reset (POR)
- Low-voltage reset (LVR)

The Phase Locked Loop (PLL) has the following features:

- highly accurate and phase locked frequency multiplier
- Configurable internal filter for best stability and lock time.
- Frequency modulation for defined jitter and reduced emission
- Automatic frequency lock detector
- Interrupt request on entry or exit from locked condition
- Reference clock either external (crystal) or internal square wave (1MHz IRC1M) based.
- PLL stability is sufficient for LIN communication, even if using IRC1M as reference clock

The Internal Reference Clock (IRC1M) has the following features:

- Trimmable in frequency
- Factory trimmed value for 1MHz in Flash Memory, can be overwritten by application if required

Other features of the S12CPMU include

- Clock monitor to detect loss of crystal
- Autonomous periodical interrupt (API)
- Bus Clock Generator
  - Clock switch to select either PLLCLK or external crystal/resonator based Bus Clock
  - PLLCLK divider to adjust system speed
- System Reset generation from the following possible sources:
  - Power-on reset (POR)
  - Low-voltage reset (LVR)
  - Illegal address access
  - COP time out
  - Loss of oscillation (clock monitor fail)
  - External pin $\overline{\text{RESET}}$

7.1.2 Modes of Operation

This subsection lists and briefly describes all operating modes supported by the S12CPMU.

7.1.2.1 Run Mode

The voltage regulator is in Full Performance Mode (FPM).

The Phase Locked Loop (PLL) is on.

The Internal Reference Clock (IRC1M) is on.

The API is available.

- **PLL Engaged Internal (PEI)**
  - This is the default mode after System Reset and Power-On Reset.
  - The Bus Clock is based on the PLLCLK.
  - After reset the PLL is configured for 64MHz VCOCLK operation
    Post divider is 0x03, so PLLCLK is VCOCLK divided by 4, that is 16MHz and Bus Clock is 8MHz.
    The PLL can be re-configured for other bus frequencies.
  - The reference clock for the PLL (REFCLK) is based on internal reference clock IRC1M
- **PLL Engaged External (PEE)**
  - The Bus Clock is based on the PLLCLK.
  - This mode can be entered from default mode PEI by performing the following steps:
    - Configure the PLL for desired bus frequency.
    - Program the reference divider (REFDIV[3:0] bits) to divide down oscillator frequency if necessary.
    - Enable the external oscillator (OSCE bit)
- **PLL Bypassed External (PBE)**
  - The Bus Clock is based on the Oscillator Clock (OSCCLK).
  - This mode can be entered from default mode PEI by performing the following steps:
    - Enable the external oscillator (OSCE bit)
    - Wait for oscillator to start up (UPOSC=1)
    - Select the Oscillator Clock (OSCCLK) as Bus Clock (PLLSEL=0).
  - The PLLCLK is still on to filter possible spikes of the external oscillator clock.

7.1.2.2 Wait Mode

For S12CPMU Wait Mode is the same as Run Mode.

7.1.2.3 Stop Mode

This mode is entered by executing the CPU STOP instruction.

The voltage regulator is in Reduced Power Mode (RPM).

The API is available.

The Phase Locked Loop (PLL) is off.

The Internal Reference Clock (IRC1M) is off.

Core Clock, Bus Clock and BDM Clock are stopped.

Depending on the setting of the PSTP and the OSCE bit, Stop Mode can be differentiated between Full Stop Mode (PSTP = 0 or OSCE=0) and Pseudo Stop Mode (PSTP = 1 and OSCE=1).

- **Full Stop Mode (PSTP=0 or OSCE=0)**
  The external oscillator (OSCLCP) is disabled.
  After wake-up from Full Stop Mode the Core Clock and Bus Clock are running on PLLCLK (PLLSEL=1). After wake-up from Full Stop Mode COP and RTI are running on IRCCLK (COPOSCSEL=0, RTIOSCSEL=0).
- **Pseudo Stop Mode (PSTP=1 and OSCE=1)**
  The external oscillator (OSCLCP) continues torun. If the respective enable bits are set the COP and RTI will continue to run.
  The clock configuration bits PLLSEL, COPOSCSEL, RTIOSCSEL are unchanged.

NOTE

When starting up the external oscillator (either by programming OSCE bit to 1 or on exit from Full Stop Mode with OSCE bit already 1) the software must wait for a minimum time equivalent to the startup-time of the external oscillator t_{UPOSC} before entering Pseudo Stop Mode.

7.1.3 S12CPMU Block Diagram

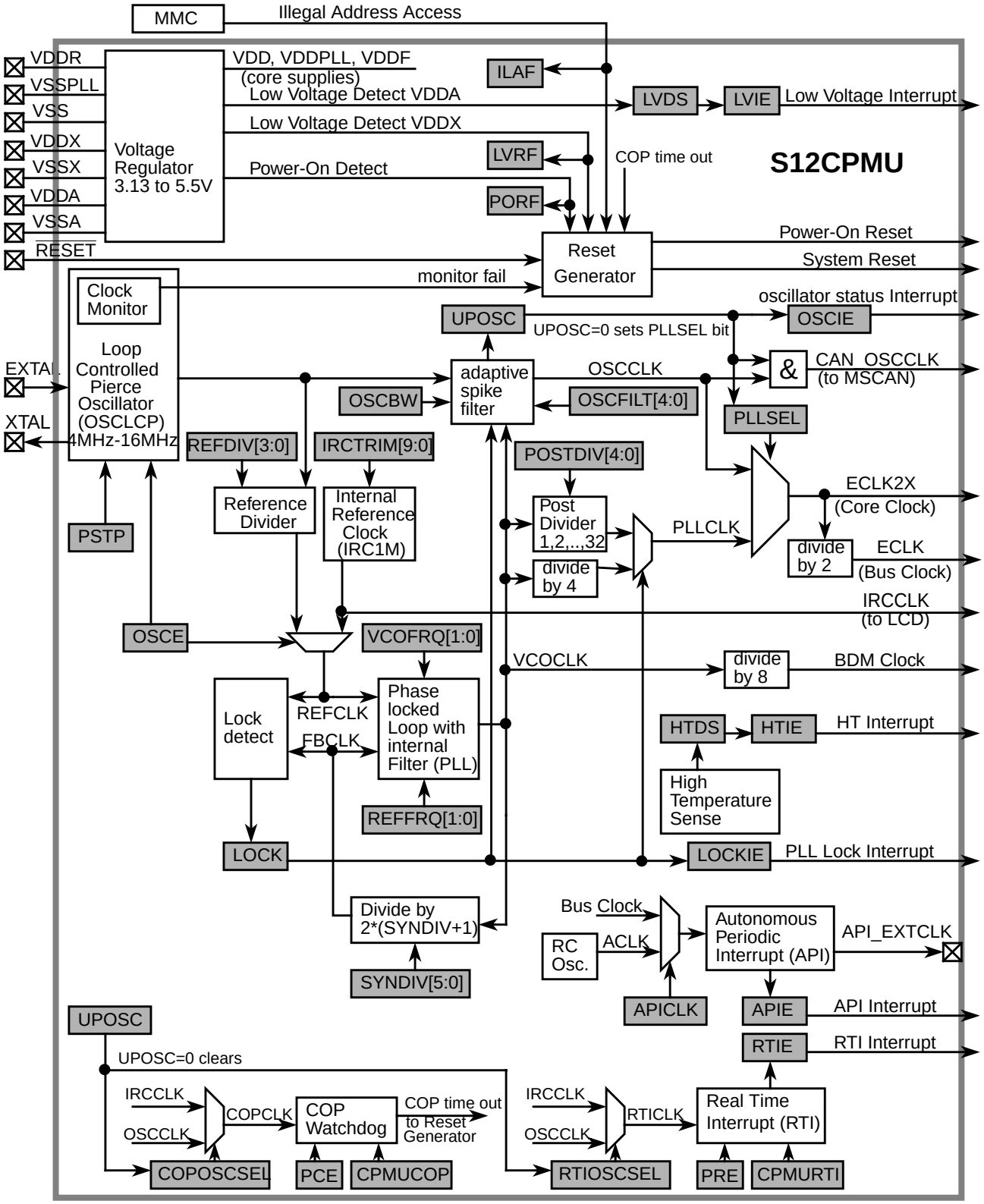

Figure 7-1. Block diagram of S12CPMU

Figure 7-2 shows a block diagram of the OSCLCP.

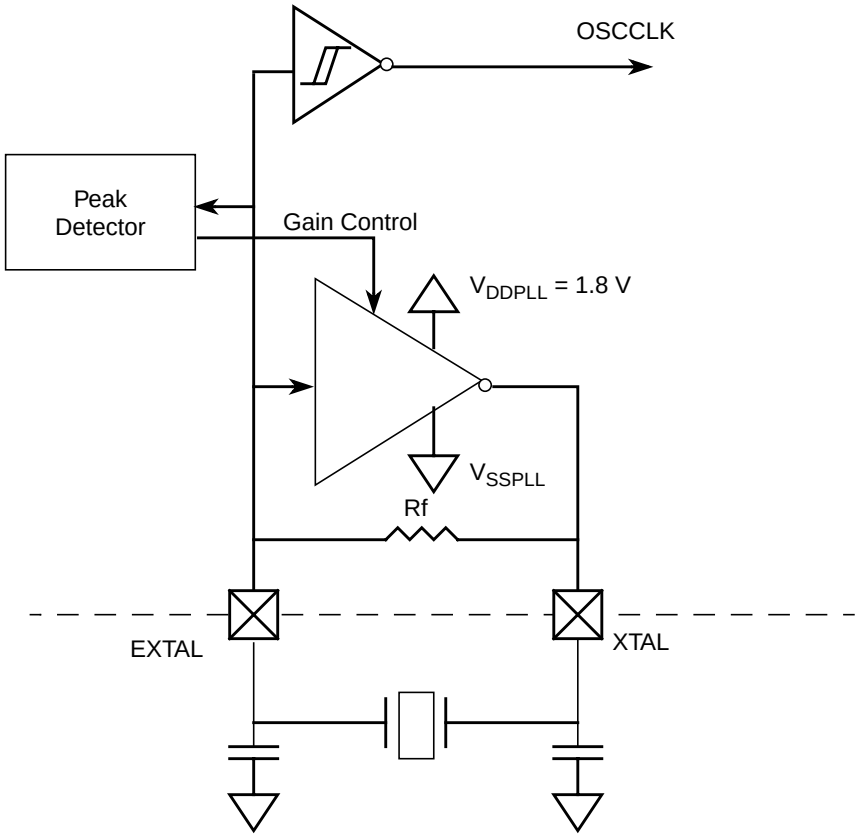

Figure 7-2. OSCLCP Block Diagram

7.2 Signal Description

This section lists and describes the signals that connect off chip.

7.2.1 $\overline{\text{RESET}}$

$\overline{\text{RESET}}$ is an active-low bidirectional pin. As an input it initializes the MCU asynchronously to a known start-up state. As an open-drain output it indicates that an MCU-internal reset has been triggered.

7.2.2 EXTAL and XTAL

These pins provide the interface for a crystal to control the internal clock generator circuitry. EXTAL is the external clock input or the input to the crystal oscillator amplifier. XTAL is the output of the crystal oscillator amplifier. The MCU internal OSCCLK is derived from the EXTAL input frequency. If OSCE=0,

the EXTAL pin is pulled down by an internal resistor of approximately 200 kΩ and the XTAL pin is pulled down by an internal resistor of approximately 700 kΩ.

NOTE

Freescale recommends an evaluation of the application board and chosen resonator or crystal by the resonator or crystal supplier.

Loop controlled circuit is not suited for overtone resonators and crystals.

7.2.3 TEMPSENSE — temperature sensor output voltage

Depending on the VSEL value either the voltage level generated by the temperature sensor or the VREG bandgap voltage is driven to a special channel of the ATD Converter. See device level specification for connectivity.

7.2.4 VDDR — Regulator Power Input Pin

VDDR is the power input of IVREG. All currents sourced into the regulator loads flow through this pin. A chip external decoupling capacitor (100 nF...220 nF, X7R ceramic) between VDDR and VSS can smooth ripple on VDDR.

7.2.5 VDDA, VSSA — Regulator Reference Supply Pins

VDDA/VSSA, which are relatively quiet, are used to supply the analog parts of the regulator. Internal precision reference circuits are supplied from these signals. A chip external decoupling capacitor (100 nF...220 nF, X7R ceramic) between VDDA and VSSA can further improve the quality of this supply.

7.2.6 VSS, VSSPLL— Ground Pins

VSS and VSSPLL must be grounded.

7.2.7 VDDX, VSSX— Pad Supply Pins

This supply domain is monitored by the Low Voltage Reset circuit.

An off-chip decoupling capacitor (100 nF...220 nF, X7R ceramic) between VDDX and VSSX can further improve the quality of this supply.

7.2.8 API_EXTCLK — API external clock output pin

This pin provides the signal selected via APIES and is enabled with APIEA bit. See device specification to which pin it connects.

7.3 Memory Map and Registers

This section provides a detailed description of all registers accessible in the S12CPMU.

7.3.1 Module Memory Map

The S12CPMU registers are shown in Figure 7-3.

Address	Name		Bit 7	6	5	4	3	2	1	Bit 0
0x0034	CPMU SYNR	R	VCOFRQ[1:0]		SYNDIV[5:0]					
		W								
0x0035	CPMU REFDIV	R	REFFRQ[1:0]		0	0	REFDIV[3:0]			
		W								
0x0036	CPMU POSTDIV	R	0	0	0	POSTDIV[4:0]				
		W								
0x0037	CPMUFLG	R	RTIF	PORF	LVRF	LOCKIF	LOCK	ILAF	OSCIF	UPOSC
		W								
0x0038	CPMUINT	R	RTIE	0	0	LOCKIE	0	0	OSCIE	0
		W								
0x0039	CPMUCLKS	R	PLLSEL	PSTP	0	0	PRE	PCE	RTI OSCSEL	COP OSCSEL
		W								
0x003A	CPMUPLL	R	0	0	FM1	FM0	0	0	0	0
		W								
0x003B	CPMURTI	R	RTDEC	RTR6	RTR5	RTR4	RTR3	RTR2	RTR1	RTR0
		W								
0x003C	CPMUCOP	R	WCOP	RSBCK	0	0	0	CR2	CR1	CR0
		W			WRTMASK					
0x003D	RESERVED CPMUTEST0	R	0	0	0	0	0	0	0	0
		W								
0x003E	RESERVED CPMUTEST1	R	0	0	0	0	0	0	0	0
		W								
0x003F	CPMU ARMCOP	R	0	0	0	0	0	0	0	0
		W	Bit 7	Bit 6	Bit 5	Bit 4	Bit 3	Bit 2	Bit 1	Bit 0
0x02F0	CPMU HTCTL	R	0	0	VSEL	0	HTE	HTDS	HTIE	HTIF
		W								
0x02F1	CPMU LVCTL	R	0	0	0	0	0	LVDS	LVIE	LVIF
		W								
0x02F2	CPMU APICTL	R	APICLK	0	0	APIES	APIEA	APIFE	APIE	APIF
		W								
			= Unimplemented or Reserved							

Figure 7-3. CPMU Register Summary

Address	Name		Bit 7	6	5	4	3	2	1	Bit 0
0x02F3	CPMUAPITR	R	APITR5	APITR4	APITR3	APITR2	APITR1	APITR0	0	0
		W								
0x02F4	CPMUAPIRH	R	APIR15	APIR14	APIR13	APIR12	APIR11	APIR10	APIR9	APIR8
		W								
0x02F5	CPMUAPIRL	R	APIR7	APIR6	APIR5	APIR4	APIR3	APIR2	APIR1	APIR0
		W								
0x02F6	RESERVED CPMUTEST3	R	0	0	0	0	0	0	0	0
		W								
0x02F7	CPMUHTTR	R	HTOE	0	0	0	HTTR3	HTTR2	HTTR1	HTTR0
		W								
0x02F8	CPMU IRCTRIMH	R	TCTRIM[3:0]				0	0	IRCTRIM[9:8]	
		W								
0x02F9	CPMU IRCTRIML	R	IRCTRIM[7:0]							
		W								
0x02FA	CPMUOSC	R	OSCE	OSCBW	0	OSCFILT[4:0]				
		W								
0x02FB	CPMUPROT	R	0	0	0	0	0	0	0	PROT
		W								
0x02FC	RESERVED CPMUTEST2	R	0	0	0	0	0	0	0	0
		W								

= Unimplemented or Reserved

Figure 7-3. CPMU Register Summary

7.3.2 Register Descriptions

This section describes all the S12CPMU registers and their individual bits.

Address order is as listed in Figure 7-3.

7.3.2.1 S12CPMU Synthesizer Register (CPMUSYNR)

The CPMUSYNR register controls the multiplication factor of the PLL and selects the VCO frequency range.

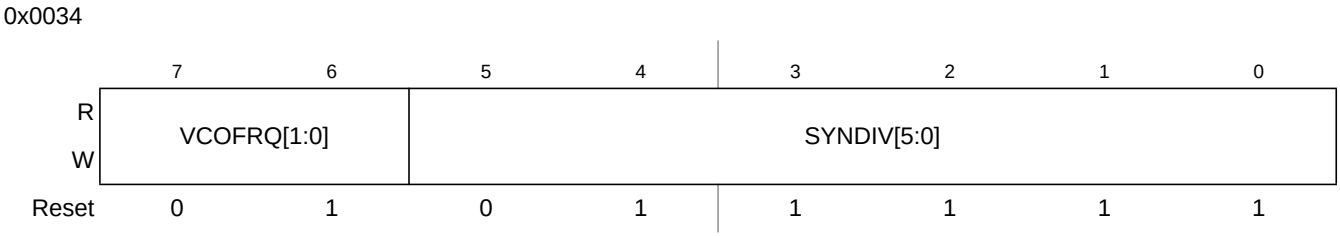

Figure 7-4. S12CPMU Synthesizer Register (CPMUSYNR)

Read: Anytime

Write: If PROT=0 (CPMUPROT register) and PLLSEL=1 (CPMUCLKS register), then write anytime. Else write has no effect.

NOTE

Writing to this register clears the LOCK and UPOSC status bits.

If PLL has locked (LOCK=1) $f_{VCO} = 2 \times f_{REF} \times (SYNDIV + 1)$

NOTE

f_{VCO} must be within the specified VCO frequency lock range. Bus frequency f_{bus} must not exceed the specified maximum.

The VCOFRQ[1:0] bits are used to configure the VCO gain for optimal stability and lock time. For correct PLL operation the VCOFRQ[1:0] bits have to be selected according to the actual target VCOCLK frequency as shown in Table 7-1. Setting the VCOFRQ[1:0] bits incorrectly can result in a non functional PLL (no locking and/or insufficient stability).

Table 7-1. VCO Clock Frequency Selection

VCOCLK Frequency Ranges	VCOFRQ[1:0]
32MHz <= f_{VCO}<= 48MHz	00
48MHz < f_{VCO}<= 64MHz	01
Reserved	10
Reserved	11

7.3.2.2 S12CPMU Reference Divider Register (CPMUREFDIV)

The CPMUREFDIV register provides a finer granularity for the PLL multiplier steps when using the external oscillator as reference.

0x0035

	7	6	5	4	3	2	1	0
R	REFFRQ[1:0]		0	0	REFDIV[3:0]			
W								
Reset	0	0	0	0	1	1	1	1

Figure 7-5. S12CPMU Reference Divider Register (CPMUREFDIV)

Read: Anytime

Write: If PROT=0 (CPMUPROT register) and PLLSEL=1 (CPMUCLKS register), then write anytime. Else write has no effect.

NOTE

Write to this register clears the LOCK and UPOSC status bits.

If OSCLCP is enabled (OSCE=1) $$f_{REF} = \frac{f_{OSC}}{(REFDIV + 1)}$$

If OSCLCP is disabled (OSCE=0) $$f_{REF} = f_{IRC1M}$$

The REFFRQ[1:0] bits are used to configure the internal PLL filter for optimal stability and lock time. For correct PLL operation the REFFRQ[1:0] bits have to be selected according to the actual REFCLK frequency as shown in Table 7-2.

If IRC1M is selected as REFCLK (OSCE=0) the PLL filter is fixed configured for the 1MHz <= f_{REF} <= 2MHz range. The bits can still be written but will have no effect on the PLL filter configuration.

For OSCE=1, setting the REFFRQ[1:0] bits incorrectly can result in a non functional PLL (no locking and/or insufficient stability).

Table 7-2. Reference Clock Frequency Selection if OSC_LCP is enabled

REFCLK Frequency Ranges (OSCE=1)	REFFRQ[1:0]
1MHz <= f_{REF} <= 2MHz	00
2MHz < f_{REF} <= 6MHz	01
6MHz < f_{REF} <= 12MHz	10
f_{REF} >12MHz	11

7.3.2.3 S12CPMU Post Divider Register (CPMUPOSTDIV)

The POSTDIV register controls the frequency ratio between the VCOCLK and the PLLCLK.

0x0036

	7	6	5	4	3	2	1	0
R	0	0	0	POSTDIV[4:0]				
W								
Reset	0	0	0	0	0	0	1	1

= Unimplemented or Reserved

Figure 7-6. S12CPMU Post Divider Register (CPMUPOSTDIV)

Read: Anytime

Write: If PLLSEL=1 write anytime, else write has no effect.

If PLL is locked (LOCK=1) $f_{PLL} = \frac{f_{VCO}}{(POSTDIV + 1)}$

If PLL is not locked (LOCK=0) $f_{PLL} = \frac{f_{VCO}}{4}$

If PLL is selected (PLLSEL=1) $f_{bus} = \frac{f_{PLL}}{2}$

7.3.2.4 S12CPMU Flags Register (CPMUFLG)

This register provides S12CPMU status bits and flags.

0x0037

	7	6	5	4	3	2	1	0
R	RTIF	PORF	LVRF	LOCKIF	LOCK	ILAF	OSCIF	UPOSC
W								
Reset	0	Note 1	Note 2	0	0	Note 3	0	0

1. PORF is set to 1 when a power on reset occurs. Unaffected by System Reset.
2. LVRF is set to 1 when a low voltage reset occurs. Unaffected by System Reset. Set by power on reset.
3. ILAF is set to 1 when an illegal address reset occurs. Unaffected by System Reset. Cleared by power on reset.

= Unimplemented or Reserved

Figure 7-7. S12CPMU Flags Register (CPMUFLG)

Read: Anytime

Write: Refer to each bit for individual write conditions

Table 7-3. CPMUFLG Field Descriptions

Field	Description
7 RTIF	**Real Time Interrupt Flag** — RTIF is set to 1 at the end of the RTI period. This flag can only be cleared by writing a 1. Writing a 0 has no effect. If enabled (RTIE=1), RTIF causes an interrupt request. 0 RTI time-out has not yet occurred. 1 RTI time-out has occurred.
6 PORF	**Power on Reset Flag** — PORF is set to 1 when a power on reset occurs. This flag can only be cleared by writing a 1. Writing a 0 has no effect. 0 Power on reset has not occurred. 1 Power on reset has occurred.
5 LVRF	**Low Voltage Reset Flag** — LVRF is set to 1 when a low voltage reset occurs. This flag can only be cleared by writing a 1. Writing a 0 has no effect. 0 Low voltage reset has not occurred. 1 Low voltage reset has occurred.
4 LOCKIF	**PLL Lock Interrupt Flag** — LOCKIF is set to 1 when LOCK status bit changes. This flag can only be cleared by writing a 1. Writing a 0 has no effect.If enabled (LOCKIE=1), LOCKIF causes an interrupt request. 0 No change in LOCK bit. 1 LOCK bit has changed.
3 LOCK	**Lock Status Bit** — LOCK reflects the current state of PLL lock condition. Writes have no effect. While PLL is unlocked (LOCK=0) f_{PLL} is f_{VCO} / 4 to protect the system from high core clock frequencies during the PLL stabilization time tlock. 0 VCOCLK is not within the desired tolerance of the target frequency. $f_{PLL} = f_{VCO}/4$. 1 VCOCLK is within the desired tolerance of the target frequency. $f_{PLL} = f_{VCO}/(POSTDIV+1)$.
2 ILAF	**Illegal Address Reset Flag** — ILAF is set to 1 when an illegal address reset occurs. Refer to MMC chapter for details. This flag can only be cleared by writing a 1. Writing a 0 has no effect. 0 Illegal address reset has not occurred. 1 Illegal address reset has occurred.
1 OSCIF	**Oscillator Interrupt Flag** — OSCIF is set to 1 when UPOSC status bit changes. This flag can only be cleared by writing a 1. Writing a 0 has no effect.If enabled (OSCIE=1), OSCIF causes an interrupt request. 0 No change in UPOSC bit. 1 UPOSC bit has changed.
0 UPOSC	**Oscillator Status Bit** — UPOSC reflects the status of the oscillator. Writes have no effect. While UPOSC=0 the OSCCLK going to the MSCAN module is off. Entering Full Stop Mode UPOSC is cleared. 0 The oscillator is off or oscillation is not qualified by the PLL. 1 The oscillator is qualified by the PLL.

NOTE

The adaptive spike filter uses the VCO clock as a reference to continuously qualify the external oscillator clock. Because of this, the PLL is always active and a valid PLL configuration is required for the system to work properly. Furthermore, the adaptive spike filter is used to determine the status of the external oscillator (reflected in the UPOSC bit). Since this function also relies on the VCO clock, loosing PLL lock status (LOCK=0, except for entering Pseudo Stop Mode) means loosing the oscillator status information as well (UPOSC=0).

7.3.2.5 S12CPMU Interrupt Enable Register (CPMUINT)

This register enables S12CPMU interrupt requests.

0x0038

	7	6	5	4	3	2	1	0
R	RTIE	0	0	LOCKIE	0	0	OSCIE	0
W								
Reset	0	0	0	0	0	0	0	0

= Unimplemented or Reserved

Figure 7-8. S12CPMU Interrupt Enable Register (CPMUINT)

Read: Anytime

Write: Anytime

Table 7-4. CRGINT Field Descriptions

Field	Description
7 RTIE	**Real Time Interrupt Enable Bit** 0 Interrupt requests from RTI are disabled. 1 Interrupt will be requested whenever RTIF is set.
4 LOCKIE	**PLL Lock Interrupt Enable Bit** 0 PLL LOCK interrupt requests are disabled. 1 Interrupt will be requested whenever LOCKIF is set.
1 OSCIE	**Oscillator Corrupt Interrupt Enable Bit** 0 Oscillator Corrupt interrupt requests are disabled. 1 Interrupt will be requested whenever OSCIF is set.

7.3.2.6 S12CPMU Clock Select Register (CPMUCLKS)

This register controls S12CPMU clock selection.

0x0039

	7	6	5	4	3	2	1	0
R	PLLSEL	PSTP	0	0	PRE	PCE	RTI OSCSEL	COP OSCSEL
W								
Reset	1	0	0	0	0	0	0	0

= Unimplemented or Reserved

Figure 7-9. S12CPMU Clock Select Register (CPMUCLKS)

Read: Anytime

Write:

1. Only possible when PROT=0 (CPMUPROT register).
2. All bits anytime in Special Modes.
3. PLLSEL, PSTP, PRE, PCE, RTIOSCSEL: Anytime in Normal Mode.
4. COPOSCSEL: Anytime in normal mode until CPMUCOP write once has taken place.
   If COPOSCSEL was cleared by UPOSC=0 (entering Full Stop Mode with COPOSCSEL=1 or insufficient OSCCLK quality), then COPOSCSEL can be set once again.

> After writing CPMUCLKS register, it is strongly recommended to read back CPMUCLKS register to make sure that write of PLLSEL, RTIOSCSEL and COPOSCSEL was successful.

Table 7-5. CPMUCLKS Descriptions

Field	Description
7 PLLSEL	**PLL Select Bit** This bit selects the PLLCLK as source of the System Clocks (Core Clock and Bus Clock). PLLSEL can only be set to 0, if UPOSC=1. UPOSC= 0 sets the PLLSEL bit. Entering Full Stop Mode sets the PLLSEL bit. 0 System clocks are derived from OSCCLK if oscillator is up (UPOSC=1, $f_{bus} = f_{osc} / 2$. 1 System clocks are derived from PLLCLK, $f_{bus} = f_{PLL} / 2$.
6 PSTP	**Pseudo Stop Bit** This bit controls the functionality of the oscillator during Stop Mode. 0 Oscillator is disabled in Stop Mode (Full Stop Mode). 1 Oscillator continues to run in Stop Mode (Pseudo Stop Mode), option to run RTI and COP. **Note:** Pseudo Stop Mode allows for faster STOP recovery and reduces the mechanical stress and aging of the resonator in case of frequent STOP conditions at the expense of a slightly increased power consumption. **Note:** When starting up the external oscillator (either by programming OSCE bit to 1 or on exit from Full Stop Mode with OSCE bit is already 1) the software must wait for a minimum time equivalent to the startup-time of the external oscillator t_{UPOSC} before entering Pseudo Stop Mode.

Table 7-5. CPMUCLKS Descriptions (continued)

Field	Description
3 PRE	**RTI Enable During Pseudo Stop Bit** — PRE enables the RTI during Pseudo Stop Mode. 0 RTI stops running during Pseudo Stop Mode. 1 RTI continues running during Pseudo Stop Mode if RTIOSCSEL=1. **Note:** If PRE=0 or RTIOSCSEL=0 then the RTI will go static while Stop Mode is active. The RTI counter will not be reset.
2 PCE	**COP Enable During Pseudo Stop Bit** — PCE enables the COP during Pseudo Stop Mode. 0 COP stops running during Pseudo Stop Mode 1 COP continues running during Pseudo Stop Mode if COPOSCSEL=1 **Note:** If PCE=0 or COPOSCSEL=0 then the COP will go static while Stop Mode is active. The COP counter will not be reset.
1 RTIOSCSEL	**RTI Clock Select**— RTIOSCSEL selects the clock source to the RTI. Either IRCCLK or OSCCLK. Changing the RTIOSCSEL bit re-starts the RTI time-out period. RTIOSCSEL can only be set to 1, if UPOSC=1. UPOSC= 0 clears the RTIOSCSEL bit. 0 RTI clock source is IRCCLK. 1 RTI clock source is OSCCLK.
0 COPOSCSEL	**COP Clock Select**— COPOSCSEL selects the clock source to the COP. Either IRCCLK or OSCCLK. Changing the COPOSCSEL bit re-starts the COP time-out period. COPOSCSEL can only be set to 1, if UPOSC=1. UPOSC= 0 clears the COPOSCSEL bit. 0 COP clock source is IRCCLK. 1 COP clock source is OSCCLK

7.3.2.7 S12CPMU PLL Control Register (CPMUPLL)

This register controls the PLL functionality.

0x003A

	7	6	5	4	3	2	1	0
R	0	0	FM1	FM0	0	0	0	0
W								
Reset	0	0	0	0	0	0	0	0

Figure 7-10. S12CPMU PLL Control Register (CPMUPLL)

Read: Anytime

Write: Anytime if PROT=0 (CPMUPROT register) and PLLSEL=1 (CPMUCLKS register). Else write has no effect.

NOTE

Write to this register clears the LOCK and UPOSC status bits.

NOTE

Care should be taken to ensure that the bus frequency does not exceed the specified maximum when frequency modulation is enabled.

NOTE

The frequency modulation (FM1 and FM0) can not be used if the Oscillator Filter is enabled.

Table 7-6. CPMUPLL Field Descriptions

Field	Description
5, 4 FM1, FM0	PLL **Frequency Modulation Enable Bits** — FM1 and FM0 enable frequency modulation on the VCOCLK. This is to reduce noise emission. The modulation frequency is f_{ref} divided by 16. See Table 7-7 for coding.

Table 7-7. FM Amplitude selection

FM1	FM0	FM Amplitude / f_{VCO} Variation
0	0	FM off
0	1	±1%
1	0	±2%
1	1	±4%

7.3.2.8 S12CPMU RTI Control Register (CPMURTI)

This register selects the time-out period for the Real Time Interrupt.

The clock source for the RTI is either IRCCLK or OSCCLK depending on the setting of the RTIOSCSEL bit. In Stop Mode with PSTP=1 (Pseudo Stop Mode) and RTIOSCSEL=1 the RTI continues to run, else the RTI counter halts in Stop Mode.

0x003B

	7	6	5	4	3	2	1	0
R W	RTDEC	RTR6	RTR5	RTR4	RTR3	RTR2	RTR1	RTR0
Reset	0	0	0	0	0	0	0	0

Figure 7-11. S12CPMU RTI Control Register (CPMURTI)

Read: Anytime

Write: Anytime

NOTE

A write to this register starts the RTI time-out period. A change of the RTIOSCSEL bit (writing a different value or loosing UPOSC status) re-starts the RTI time-out period.

Table 7-8. CPMURTI Field Descriptions

Field	Description
7 RTDEC	**Decimal or Binary Divider Select Bit** — RTDEC selects decimal or binary based prescaler values. 0 Binary based divider value. See Table 7-9 1 Decimal based divider value. See Table 7-10
6–4 RTR[6:4]	**Real Time Interrupt Prescale Rate Select Bits** — These bits select the prescale rate for the RTI. See Table 7-9 and Table 7-10.
3–0 RTR[3:0]	**Real Time Interrupt Modulus Counter Select Bits** — These bits select the modulus counter target value to provide additional granularity.Table 7-9 and Table 7-10 show all possible divide values selectable by the CPMURTI register**.**

Table 7-9. RTI Frequency Divide Rates for RTDEC = 0

RTR[3:0]	RTR[6:4] =							
	000 (OFF)	**001 (2^{10})**	**010 (2^{11})**	**011 (2^{12})**	**100 (2^{13})**	**101 (2^{14})**	**110 (2^{15})**	**111 (2^{16})**
0000 (÷1)	OFF[1]	2^{10}	2^{11}	2^{12}	2^{13}	2^{14}	2^{15}	2^{16}
0001 (÷2)	OFF	$2x2^{10}$	$2x2^{11}$	$2x2^{12}$	$2x2^{13}$	$2x2^{14}$	$2x2^{15}$	$2x2^{16}$
0010 (÷3)	OFF	$3x2^{10}$	$3x2^{11}$	$3x2^{12}$	$3x2^{13}$	$3x2^{14}$	$3x2^{15}$	$3x2^{16}$
0011 (÷4)	OFF	$4x2^{10}$	$4x2^{11}$	$4x2^{12}$	$4x2^{13}$	$4x2^{14}$	$4x2^{15}$	$4x2^{16}$
0100 (÷5)	OFF	$5x2^{10}$	$5x2^{11}$	$5x2^{12}$	$5x2^{13}$	$5x2^{14}$	$5x2^{15}$	$5x2^{16}$
0101 (÷6)	OFF	$6x2^{10}$	$6x2^{11}$	$6x2^{12}$	$6x2^{13}$	$6x2^{14}$	$6x2^{15}$	$6x2^{16}$
0110 (÷7)	OFF	$7x2^{10}$	$7x2^{11}$	$7x2^{12}$	$7x2^{13}$	$7x2^{14}$	$7x2^{15}$	$7x2^{16}$
0111 (÷8)	OFF	$8x2^{10}$	$8x2^{11}$	$8x2^{12}$	$8x2^{13}$	$8x2^{14}$	$8x2^{15}$	$8x2^{16}$
1000 (÷9)	OFF	$9x2^{10}$	$9x2^{11}$	$9x2^{12}$	$9x2^{13}$	$9x2^{14}$	$9x2^{15}$	$9x2^{16}$
1001 (÷10)	OFF	$10x2^{10}$	$10x2^{11}$	$10x2^{12}$	$10x2^{13}$	$10x2^{14}$	$10x2^{15}$	$10x2^{16}$
1010 (÷11)	OFF	$11x2^{10}$	$11x2^{11}$	$11x2^{12}$	$11x2^{13}$	$11x2^{14}$	$11x2^{15}$	$11x2^{16}$
1011 (÷12)	OFF	$12x2^{10}$	$12x2^{11}$	$12x2^{12}$	$12x2^{13}$	$12x2^{14}$	$12x2^{15}$	$12x2^{16}$
1100 (÷13)	OFF	$13x2^{10}$	$13x2^{11}$	$13x2^{12}$	$13x2^{13}$	$13x2^{14}$	$13x2^{15}$	$13x2^{16}$
1101 (÷14)	OFF	$14x2^{10}$	$14x2^{11}$	$14x2^{12}$	$14x2^{13}$	$14x2^{14}$	$14x2^{15}$	$14x2^{16}$
1110 (÷15)	OFF	$15x2^{10}$	$15x2^{11}$	$15x2^{12}$	$15x2^{13}$	$15x2^{14}$	$15x2^{15}$	$15x2^{16}$
1111 (÷16)	OFF	$16x2^{10}$	$16x2^{11}$	$16x2^{12}$	$16x2^{13}$	$16x2^{14}$	$16x2^{15}$	$16x2^{16}$

[1] Denotes the default value out of reset.This value should be used to disable the RTI to ensure future backwards compatibility.

Table 7-10. RTI Frequency Divide Rates for RTDEC=1

RTR[3:0]	RTR[6:4] =							
	000 ($1x10^3$)	**001 ($2x10^3$)**	**010 ($5x10^3$)**	**011 ($10x10^3$)**	**100 ($20x10^3$)**	**101 ($50x10^3$)**	**110 ($100x10^3$)**	**111 ($200x10^3$)**
0000 (÷1)	$1x10^3$	$2x10^3$	$5x10^3$	$10x10^3$	$20x10^3$	$50x10^3$	$100x10^3$	$200x10^3$
0001 (÷2)	$2x10^3$	$4x10^3$	$10x10^3$	$20x10^3$	$40x10^3$	$100x10^3$	$200x10^3$	$400x10^3$
0010 (÷3)	$3x10^3$	$6x10^3$	$15x10^3$	$30x10^3$	$60x10^3$	$150x10^3$	$300x10^3$	$600x10^3$
0011 (÷4)	$4x10^3$	$8x10^3$	$20x10^3$	$40x10^3$	$80x10^3$	$200x10^3$	$400x10^3$	$800x10^3$
0100 (÷5)	$5x10^3$	$10x10^3$	$25x10^3$	$50x10^3$	$100x10^3$	$250x10^3$	$500x10^3$	$1x10^6$
0101 (÷6)	$6x10^3$	$12x10^3$	$30x10^3$	$60x10^3$	$120x10^3$	$300x10^3$	$600x10^3$	$1.2x10^6$
0110 (÷7)	$7x10^3$	$14x10^3$	$35x10^3$	$70x10^3$	$140x10^3$	$350x10^3$	$700x10^3$	$1.4x10^6$
0111 (÷8)	$8x10^3$	$16x10^3$	$40x10^3$	$80x10^3$	$160x10^3$	$400x10^3$	$800x10^3$	$1.6x10^6$
1000 (÷9)	$9x10^3$	$18x10^3$	$45x10^3$	$90x10^3$	$180x10^3$	$450x10^3$	$900x10^3$	$1.8x10^6$
1001 (÷10)	$10\ x10^3$	$20x10^3$	$50x10^3$	$100x10^3$	$200x10^3$	$500x10^3$	$1x10^6$	$2x10^6$
1010 (÷11)	$11\ x10^3$	$22x10^3$	$55x10^3$	$110x10^3$	$220x10^3$	$550x10^3$	$1.1x10^6$	$2.2x10^6$
1011 (÷12)	$12x10^3$	$24x10^3$	$60x10^3$	$120x10^3$	$240x10^3$	$600x10^3$	$1.2x10^6$	$2.4x10^6$
1100 (÷13)	$13x10^3$	$26x10^3$	$65x10^3$	$130x10^3$	$260x10^3$	$650x10^3$	$1.3x10^6$	$2.6x10^6$
1101 (÷14)	$14x10^3$	$28x10^3$	$70x10^3$	$140x10^3$	$280x10^3$	$700x10^3$	$1.4x10^6$	$2.8x10^6$
1110 (÷15)	$15x10^3$	$30x10^3$	$75x10^3$	$150x10^3$	$300x10^3$	$750x10^3$	$1.5x10^6$	$3x10^6$
1111 (÷16)	$16x10^3$	$32x10^3$	$80x10^3$	$160x10^3$	$320x10^3$	$800x10^3$	$1.6x10^6$	$3.2x10^6$

7.3.2.9 S12CPMU COP Control Register (CPMUCOP)

This register controls the COP (Computer Operating Properly) watchdog.

The clock source for the COP is either IRCCLK or OSCCLK depending on the setting of the COPOSCSEL bit. In Stop Mode with PSTP=1 (Pseudo Stop Mode), COPOSCSEL=1 and PCE=1 the COP continues to run, else the COP counter halts in Stop Mode.

0x003C

	7	6	5	4	3	2	1	0
R	WCOP	RSBCK	0	0	0	CR2	CR1	CR0
W			WRTMASK					
Reset	F	0	0	0	0	F	F	F

After de-assert of System Reset the values are automatically loaded from the Flash memory. See Device specification for details.

= Unimplemented or Reserved

Figure 7-12. S12CPMU COP Control Register (CPMUCOP)

Read: Anytime

Write:

1. RSBCK: anytime in special mode; write to “1” but not to “0” in normal mode
2. WCOP, CR2, CR1, CR0:
   - Anytime in special mode, when WRTMASK is 0, otherwise it has no effect
   - Write once in normal mode, when WRTMASK is 0, otherwise it has no effect.
     - Writing CR[2:0] to “000” has no effect, but counts for the “write once” condition.
     - Writing WCOP to “0” has no effect, but counts for the “write once” condition.

When a non-zero value is loaded from Flash to CR[2:0] the COP time-out period is started.

A change of the COPOSCSEL bit (writing a different value or loosing UPOSC status) re-starts the COP time-out period.

In normal mode the COP time-out period is restarted if either of these conditions is true:

1. Writing a non-zero value to CR[2:0] (anytime in special mode, once in normal mode) with WRTMASK = 0.
2. Writing WCOP bit (anytime in special mode, once in normal mode) with WRTMASK = 0.
3. Changing RSBCK bit from “0” to “1”.

In special mode, any write access to CPMUCOP register restarts the COP time-out period.

Table 7-11. CPMUCOP Field Descriptions

Field	Description
7 WCOP	**Window COP Mode Bit** — When set, a write to the CPMUARMCOP register must occur in the last 25% of the selected period. A write during the first 75% of the selected period generates a COP reset. As long as all writes occur during this window, $55 can be written as often as desired. Once $AA is written after the $55, the time-out logic restarts and the user must wait until the next window before writing to CPMUARMCOP. Table 7-12 shows the duration of this window for the seven available COP rates. 0 Normal COP operation 1 Window COP operation
6 RSBCK	**COP and RTI Stop in Active BDM Mode Bit** 0 Allows the COP and RTI to keep running in Active BDM mode. 1 Stops the COP and RTI counters whenever the part is in Active BDM mode.
5 WRTMASK	**Write Mask for WCOP and CR[2:0] Bit** — This write-only bit serves as a mask for the WCOP and CR[2:0] bits while writing the CPMUCOP register. It is intended for BDM writing the RSBCK without changing the content of WCOP and CR[2:0]. 0 Write of WCOP and CR[2:0] has an effect with this write of CPMUCOP 1 Write of WCOP and CR[2:0] has no effect with this write of CPMUCOP. (Does not count for “write once”.)
2–0 CR[2:0]	**COP Watchdog Timer Rate Select** — These bits select the COP time-out rate (see Table 7-12). Writing a nonzero value to CR[2:0] enables the COP counter and starts the time-out period. A COP counter time-out causes a System Reset. This can be avoided by periodically (before time-out) initializing the COP counter via the CPMUARMCOP register. While all of the following four conditions are true the CR[2:0], WCOP bits are ignored and the COP operates at highest time-out period (2^{24} cycles) in normal COP mode (Window COP mode disabled): 1) COP is enabled (CR[2:0] is not 000) 2) BDM mode active 3) RSBCK = 0 4) Operation in special mode

Table 7-12. COP Watchdog Rates

CR2	CR1	CR0	COPCLK Cycles to time-out (COPCLK is either IRCCLK or OSCCLK depending on the COPOSCSEL bit)
0	0	0	COP disabled
0	0	1	2^{14}
0	1	0	2^{16}
0	1	1	2^{18}
1	0	0	2^{20}
1	0	1	2^{22}
1	1	0	2^{23}
1	1	1	2^{24}

7.3.2.10 Reserved Register CPMUTEST0

NOTE

This reserved register is designed for factory test purposes only, and is not intended for general user access. Writing to this register when in special mode can alter the S12CPMU's functionality.

0x003D

	7	6	5	4	3	2	1	0
R	0	0	0	0	0	0	0	0
W								
Reset	0	0	0	0	0	0	0	0

= Unimplemented or Reserved

Figure 7-13. Reserved Register (CPMUTEST0)

Read: Anytime

Write: Only in special mode

7.3.2.11 Reserved Register CPMUTEST1

NOTE

This reserved register is designed for factory test purposes only, and is not intended for general user access. Writing to this register when in special mode can alter the S12CPMU's functionality.

0x003E

	7	6	5	4	3	2	1	0
R	0	0	0	0	0	0	0	0
W								
Reset	0	0	0	0	0	0	0	0

= Unimplemented or Reserved

Figure 7-14. Reserved Register (CPMUTEST1)

Read: Anytime

Write: Only in special mode

7.3.2.12 S12CPMU COP Timer Arm/Reset Register (CPMUARMCOP)

This register is used to restart the COP time-out period.

0x003F

	7	6	5	4	3	2	1	0
R	0	0	0	0	0	0	0	0
W	Bit 7	Bit 6	Bit 5	Bit 4	Bit 3	Bit 2	Bit 1	Bit 0
Reset	0	0	0	0	0	0	0	0

Figure 7-15. S12CPMU CPMUARMCOP Register

Read: Always reads $00

Write: Anytime

When the COP is disabled (CR[2:0] = “000”) writing to this register has no effect.

When the COP is enabled by setting CR[2:0] nonzero, the following applies:

Writing any value other than $55 or $AA causes a COP reset. To restart the COP time-out period write $55 followed by a write of $AA. These writes do not need to occur back-to-back, but the sequence ($55, $AA) must be completed prior to COP end of time-out period to avoid a COP reset. Sequences of $55 writes are allowed. When the WCOP bit is set, $55 and $AA writes must be done in the last 25% of the selected time-out period; writing any value in the first 75% of the selected period will cause a COP reset.

7.3.2.13 High Temperature Control Register (CPMUHTCTL)

The CPMUHTCTL register configures the temperature sense features.

0x02F0

	7	6	5	4	3	2	1	0
R	0	0	VSEL	0	HTE	HTDS	HTIE	HTIF
W								
Reset	0	0	0	0	0	0	0	0

= Unimplemented or Reserved

Read: Anytime

Write: VSEL, HTE, HTIE and HTIF are write anytime, HTDS is read only

Figure 7-16. Voltage Access Select

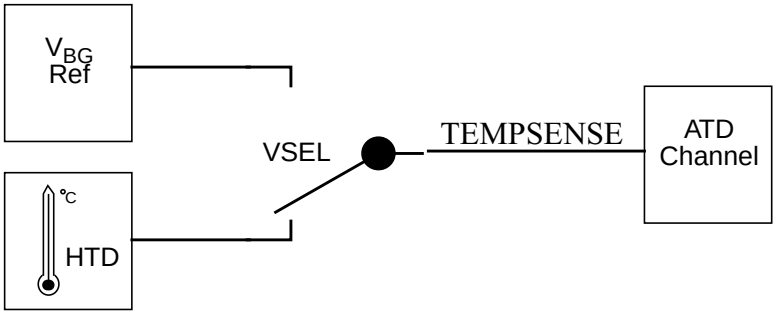

Table 7-13. CPMUHTCTL Field Descriptions

Field	Description
5 VSEL	**Voltage Access Select Bit** — If set, the bandgap reference voltage V_{BG} can be accessed internally (i.e. multiplexed to an internal Analog to Digital Converter channel). If not set, the die temperature proportional voltage V_{HT} of the temperature sense can be accessed internally. See device level specification for connectivity. 0 An internal temperature proportional voltage V_{HT} can be accessed internally. 1 Bandgap reference voltage V_{BG} can be accessed internally.
3 HTE	**High Temperature Enable Bit** — This bit enables the high temperature sensor. 0 The temperature sense is disabled. 1 The temperature sense is enabled.
2 HTDS	**High Temperature Detect Status Bit** — This read-only status bit reflects the temperature. status. Writes have no effect. 0 Junction Temperature is below level T_{HTID} or RPM. 1 Junction Temperature is above level T_{HTIA} and FPM.
1 HTIE	**High Temperature Interrupt Enable Bit** 0 Interrupt request is disabled. 1 Interrupt will be requested whenever HTIF is set.
0 HTIF	**High Temperature Interrupt Flag** — HTIF — High Temperature Interrupt Flag HTIF is set to 1 when HTDS status bit changes. This flag can only be cleared by writing a 1. Writing a 0 has no effect. If enabled (HTIE=1), HTIF causes an interrupt request. 0 No change in HTDS bit. 1 HTDS bit has changed.

7.3.2.14 Low Voltage Control Register (CPMULVCTL)

The CPMULVCTL register allows the configuration of the low-voltage detect features.

0x02F1

	7	6	5	4	3	2	1	0
R	0	0	0	0	0	LVDS	LVIE	LVIF
W								
Reset	0	0	0	0	0	U	0	U

The Reset state of LVDS and LVIF depends on the external supplied VDDA level

= Unimplemented or Reserved

Figure 7-17. Low Voltage Control Register (CPMULVCTL)

Read: Anytime

Write: LVIE and LVIF are write anytime, LVDS is read only

Table 7-14. CPMULVCTL Field Descriptions

Field	Description
2 LVDS	**Low-Voltage Detect Status Bit** — This read-only status bit reflects the voltage level on VDDA. Writes have no effect. 0 Input voltage V_{DDA} is above level V_{LVID} or RPM. 1 Input voltage V_{DDA} is below level V_{LVIA} and FPM.
1 LVIE	**Low-Voltage Interrupt Enable Bit** 0 Interrupt request is disabled. 1 Interrupt will be requested whenever LVIF is set.
0 LVIF	**Low-Voltage Interrupt Flag** — LVIF is set to 1 when LVDS status bit changes. This flag can only be cleared by writing a 1. Writing a 0 has no effect. If enabled (LVIE = 1), LVIF causes an interrupt request. 0 No change in LVDS bit. 1 LVDS bit has changed.

7.3.2.15 Autonomous Periodical Interrupt Control Register (CPMUAPICTL)

The CPMUAPICTL register allows the configuration of the autonomous periodical interrupt features.

0x02F2

	7	6	5	4	3	2	1	0
R	APICLK	0	0	APIES	APIEA	APIFE	APIE	APIF
W								
Reset	0	0	0	0	0	0	0	0

= Unimplemented or Reserved

Figure 7-18. Autonomous Periodical Interrupt Control Register (CPMUAPICTL)

Read: Anytime

Write: Anytime

Table 7-15. CPMUAPICTL Field Descriptions

Field	Description
7 APICLK	**Autonomous Periodical Interrupt Clock Select Bit** — Selects the clock source for the API. Writable only if APIFE = 0. APICLK cannot be changed if APIFE is set by the same write operation. 0 Autonomous periodical interrupt clock used as source. 1 Bus Clock used as source.
4 APIES	**Autonomous Periodical Interrupt External Select Bit** — Selects the waveform at the external pin API_EXTCLK as shown in Figure 7-19. See device level specification for connectivity of API_EXTCLK pin. 0 If APIEA and APIFE are set, at the external pin API_EXTCLK periodic high pulses are visible at the end of every selected period with the size of half of the min period (APIR=0x0000 in Table 7-19). 1 If APIEA and APIFE are set, at the external pin API_EXTCLK a clock is visible with 2 times the selected API Period.
3 APIEA	**Autonomous Periodical Interrupt External Access Enable Bit** — If set, the waveform selected by bit APIES can be accessed externally. See device level specification for connectivity. 0 Waveform selected by APIES can not be accessed externally. 1 Waveform selected by APIES can be accessed externally, if APIFE is set.
2 APIFE	**Autonomous Periodical Interrupt Feature Enable Bit** — Enables the API feature and starts the API timer when set. 0 Autonomous periodical interrupt is disabled. 1 Autonomous periodical interrupt is enabled and timer starts running.
1 APIE	**Autonomous Periodical Interrupt Enable Bit** 0 API interrupt request is disabled. 1 API interrupt will be requested whenever APIF is set.
0 APIF	**Autonomous Periodical Interrupt Flag** — APIF is set to 1 when the in the API configured time has elapsed. This flag can only be cleared by writing a 1. Writing a 0 has no effect. If enabled (APIE = 1), APIF causes an interrupt request. 0 API time-out has not yet occurred. 1 API time-out has occurred.

Figure 7-19. Waveform selected on API_EXTCLK pin (APIEA=1, APIFE=1)

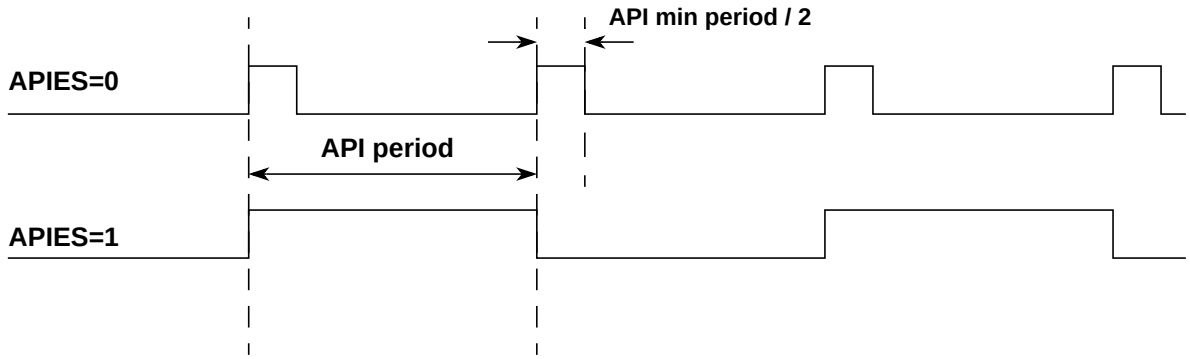

7.3.2.16 Autonomous Periodical Interrupt Trimming Register (CPMUAPITR)

The CPMUAPITR register configures the trimming of the API time-out period.

0x02F3

	7	6	5	4	3	2	1	0
R	APITR5	APITR4	APITR3	APITR2	APITR1	APITR0	0	0
W								
Reset	F	F	F	F	F	F	0	0

After de-assert of System Reset a value is automatically loaded from the Flash memory.

Figure 7-20. Autonomous Periodical Interrupt Trimming Register (CPMUAPITR)

Read: Anytime

Write: Anytime

Table 7-16. CPMUAPITR Field Descriptions

Field	Description
7–2 APITR[5:0]	**Autonomous Periodical Interrupt Period Trimming Bits** — See Table 7-17 for trimming effects. The APITR[5:0] value represents a signed number influencing the ACLK period time.

Table 7-17. Trimming Effect of APITR

Bit	Trimming Effect
APITR[5]	Increases period
APITR[4]	Decreases period less than APITR[5] increased it
APITR[3]	Decreases period less than APITR[4]
APITR[2]	Decreases period less than APITR[3]
APITR[1]	Decreases period less than APITR[2]
APITR[0]	Decreases period less than APITR[1]

7.3.2.17 Autonomous Periodical Interrupt Rate High and Low Register (CPMUAPIRH / CPMUAPIRL)

The CPMUAPIRH and CPMUAPIRL registers allow the configuration of the autonomous periodical interrupt rate.

0x02F4

	7	6	5	4	3	2	1	0
R W	APIR15	APIR14	APIR13	APIR12	APIR11	APIR10	APIR9	APIR8
Reset	0	0	0	0	0	0	0	0

= Unimplemented or Reserved

Figure 7-21. Autonomous Periodical Interrupt Rate High Register (CPMUAPIRH)

0x02F5

	7	6	5	4	3	2	1	0
R W	APIR7	APIR6	APIR5	APIR4	APIR3	APIR2	APIR1	APIR0
Reset	0	0	0	0	0	0	0	0

Figure 7-22. Autonomous Periodical Interrupt Rate Low Register (CPMUAPIRL)

Read: Anytime

Write: If APIFE=0, then write anytime, else writes have no effect.

Table 7-18. CPMUAPIRH / CPMUAPIRL Field Descriptions

Field	Description
15-0 APIR[15:0]	**Autonomous Periodical Interrupt Rate Bits** — These bits define the time-out period of the API. See Table 7-19 for details of the effect of the autonomous periodical interrupt rate bits.

The period can be calculated as follows depending on logical value of the APICLK bit:

APICLK=0: Period = 2*(APIR[15:0] + 1) * f_{ACLK}
APICLK=1: Period = 2*(APIR[15:0] + 1) * Bus Clock period

Table 7-19. Selectable Autonomous Periodical Interrupt Periods

APICLK	APIR[15:0]	Selected Period
0	0000	0.2 ms[1]
0	0001	0.4 ms[1]
0	0002	0.6 ms[1]
0	0003	0.8 ms[1]
0	0004	1.0 ms[1]
0	0005	1.2 ms[1]
0	.....	.....
0	FFFD	13106.8 ms[1]
0	FFFE	13107.0 ms[1]
0	FFFF	13107.2 ms[1]
1	0000	2 * Bus Clock period
1	0001	4 * Bus Clock period
1	0002	6 * Bus Clock period
1	0003	8 * Bus Clock period
1	0004	10 * Bus Clock period
1	0005	12 * Bus Clock period
1	.....	.....
1	FFFD	131068 * Bus Clock period
1	FFFE	131070 * Bus Clock period
1	FFFF	131072 * Bus Clock period

1 When f_{ACLK} is trimmed to 10KHz.

7.3.2.18 Reserved Register CPMUTEST3

NOTE

This reserved register is designed for factory test purposes only, and is not intended for general user access. Writing to this register when in special mode can alter the S12CPMU's functionality.

0x02F6

	7	6	5	4	3	2	1	0
R	0	0	0	0	0	0	0	0
W								
Reset	0	0	0	0	0	0	0	0

= Unimplemented or Reserved

Figure 7-23. Reserved Register (CPMUTEST3)

Read: Anytime

Write: Only in special mode

7.3.2.19 High Temperature Trimming Register (CPMUHTTR)

The CPMUHTTR register configures the trimming of the S12CPMU temperature sense.

0x02F7

	7	6	5	4	3	2	1	0
R	HTOE	0	0	0	HTTR3	HTTR2	HTTR1	HTTR0
W								
Reset	0	0	0	0	F	F	F	F

After de-assert of System Reset a trim value is automatically loaded from the Flash memory. See Device specification for details.

= Unimplemented or Reserved

Read: Anytime

Write: Anytime

Field	Description
7 HTOE	**High Temperature Offset Enable Bit** — If set the temperature sense offset is enabled. 0 The temperature sense offset is disabled. HTTR[3:0] bits don't care. 1 The temperature sense offset is enabled. HTTR[3:0] select the temperature offset.
3–0 HTTR[3:0]	**High Temperature Trimming Bits** — See Table 1-27 for trimming effects.

Bit	Trimming Effect
HTTR[3]	Increases V_{HT} twice of HTTR[2]
HTTR[2]	Increases V_{HT} twice of HTTR[1]
HTTR[1]	Increases V_{HT} twice of HTTR[0]
HTTR[0]	Increases V_{HT} (to compensate Temperature Offset)

7.3.2.20 S12CPMU IRC1M Trim Registers (CPMUIRCTRIMH / CPMUIRCTRIML)

0x02F8

	15	14	13	12	11	10	9	8
R	TCTRIM[3:0]				0	0	IRCTRIM[9:8]	
W								
Reset	F	F	F	F	0	0	F	F

After de-assert of System Reset a factory programmed trim value is automatically loaded from the Flash memory to provide trimmed Internal Reference Frequency f_{IRC1M_TRIM}.

Figure 7-24. S12CPMU IRC1M Trim High Register (CPMUIRCTRIMH)

0x02F9

	7	6	5	4	3	2	1	0
R	IRCTRIM[7:0]							
W								
Reset	F	F	F	F	F	F	F	F

After de-assert of System Reset a factory programmed trim value is automatically loaded from the Flash memory to provide trimmed Internal Reference Frequency f_{IRC1M_TRIM}.

Figure 7-25. S12CPMU IRC1M Trim Low Register (CPMUIRCTRIML)

Read: Anytime

Write: If PROT=0 (CPMUPROT register), then write anytime. Else write has no effect

NOTE

Writes to these registers while PLLSEL=1 clears the LOCK and UPOSC status bits.

Table 7-20. CPMUIRCTRIMH/L Field Descriptions

Field	Description
15-12 TCTRIM[3:0]	**IRC1M temperature coefficient Trim Bits** Trim bits for the Temperature Coefficient (TC) of the IRC1M frequency. Table 7-21 shows the influence of the bits TCTRIM3:0] on the relationship between frequency and temperature. Figure 7-27 shows an approximate TC variation, relative to the nominal TC of the IRC1M (i.e. for TCTRIM[3:0]=0000 or 1000).
9-0 IRCTRIM[9:0]	**IRC1M Frequency Trim Bits** — Trim bits for Internal Reference Clock After System Reset the factory programmed trim value is automatically loaded into these registers, resulting in a Internal Reference Frequency f_{IRC1M_TRIM}. See device electrical characteristics for value of f_{IRC1M_TRIM}. The frequency trimming consists of two different trimming methods: A rough trimming controlled by bits IRCTRIM[9:6] can be done with frequency leaps of about 6% in average. A fine trimming controlled by the bits IRCTRIM[5:0] can be doe with frequency leaps of about 0.3% (this trimming determines the precision of the frequency setting of 0.15%, i.e. 0.3% is the distance between two trimming values). Figure 7-26 shows the relationship between the trim bits and the resulting IRC1M frequency.

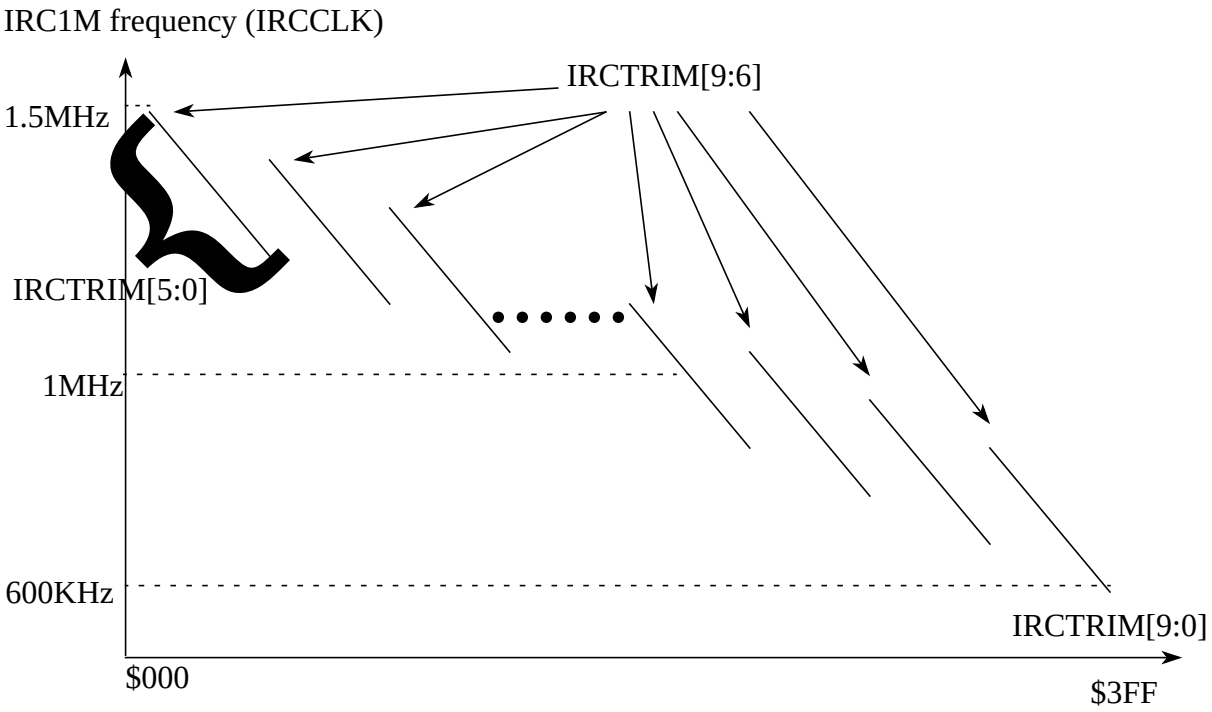

Figure 7-26. IRC1M Frequency Trimming Diagram

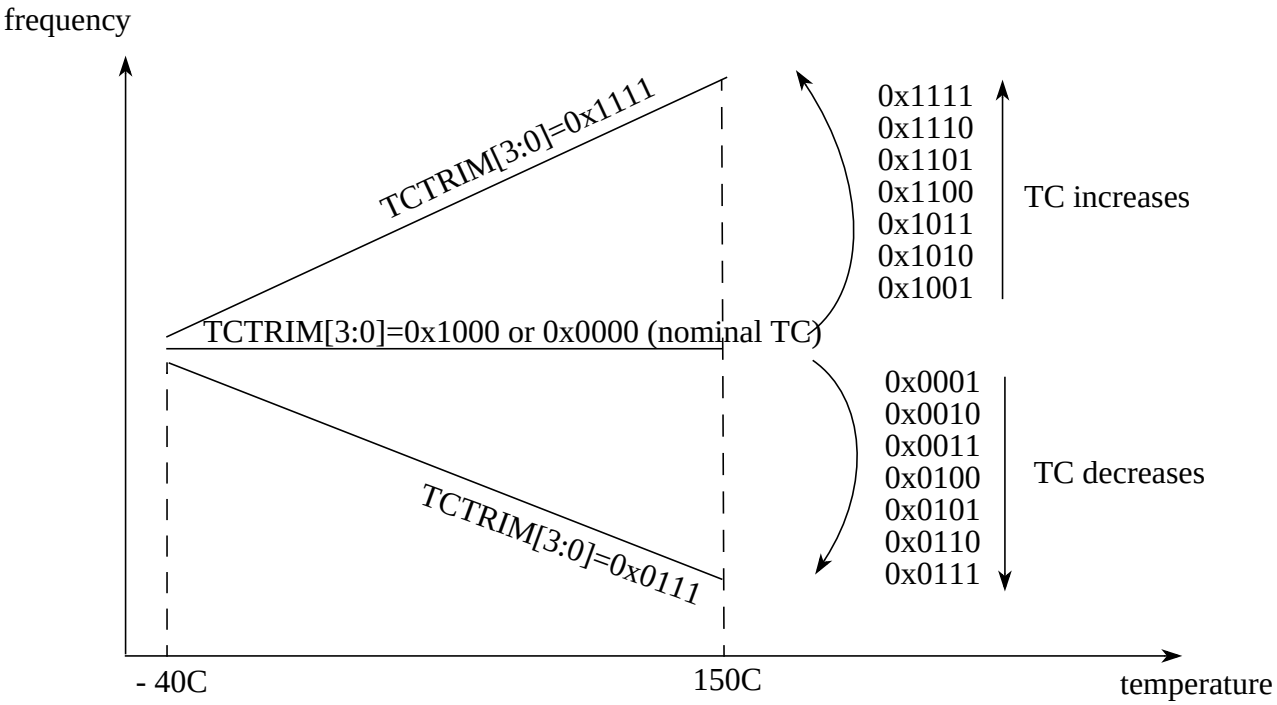

Figure 7-27. Influence of TCTRIM[3:0] on the Temperature Coefficient

NOTE

The frequency is not necessarily linear with the temperature (in most cases it will not be). The above diagram is meant only to give the direction (positive or negative) of the variation of the TC, relative to the nominal TC.

Setting TCTRIM[3:0] to 0x0000 or 0x1000 does not mean that the temperature coefficient will be zero. These two combinations basically switch off the TC compensation module, which results in the nominal TC of the IRC1M.

TCTRIM[3:0]	IRC1M indicative relative TC variation	IRC1M indicative frequency drift for relative TC variation
0000	0 (nominal TC of the IRC1M)	0%
0001	-0.54%	-0.8%
0010	-1.08%	-1.6%
0011	-1.63%	-2.4%
0100	-2.20%	-3.2%
0101	-2.77%	-4.0%
0110	-3.33%	-4.8%
0111	-3.91%	-5.5%
1000	0 (nominal TC of the IRC1M)	0%
1001	+0.54%	+0.8%
1010	+1.07%	+1.6%
1011	+1.59%	+2.4%
1100	+2.11%	+3.2%
1101	+2.62%	+4.0%
1110	+3.12%	+4.8%
1111	+3.62%	+5.5%

Table 7-21. TC trimming of the IRC1M frequency at ambient temperature

NOTE

Since the IRC1M frequency is not a linear function of the temperature, but more like a parabola, the above relative TC variation is only an indication and should be considered with care.

Be aware that the output frequency vary with TC trimming, A frequency trimming correction is therefore necessary**.** The values provided in Table 7-21 are typical values at ambient temperature which can vary from device to device.

7.3.2.21 S12CPMU Oscillator Register (CPMUOSC)

This registers configures the external oscillator (OSCLCP).

0x02FA

	7	6	5	4	3	2	1	0
R	OSCE	OSCBW	0	OSCFILT[4:0]				
W								
Reset	0	0	0	0	0	0	0	0

Figure 7-28. S12CPMU Oscillator Register (CPMUOSC)

Read: Anytime

Write: If PROT=0 (CPMUPROT register) and PLLSEL=1 (CPMUCLKS register), then write anytime. Else write has no effect.

NOTE.

Write to this register clears the LOCK and UPOSC status bits.

NOTE.

If the chosen VCOCLK-to-OSCCLK ratio divided by two is not an integer number, then the filter can not be used and the OSCFILT[4:0] bits must be set to 0.

Table 7-22. CPMUOSC Field Descriptions

Field	Description
7 OSCE	**Oscillator Enable Bit** — This bit enables the external oscillator (OSCLCP). The UPOSC status bit in the CPMUFLG register indicates when the oscillation is stable and OSCCLK can be selected as Bus Clock or source of the COP or RTI. A loss of oscillation will lead to a clock monitor reset. 0 External oscillator is disabled. REFCLK for PLL is IRCCLK. 1 External oscillator is enabled.Clock monitor is enabled. REFCLK for PLL is the external oscillator clock divided by REFDIV. **Note:** When starting up the external oscillator (either by programming OSCE bit to 1 or on exit from Full Stop Mode with OSCE bit is already 1) the software must wait for a minimum time equivalent to the startup-time of the external oscillator t_{UPOSC} before entering Pseudo Stop Mode.
6 OSCBW	**Oscillator Filter Bandwidth Bit —** If the VCOCLK frequency exceeds 25 MHz wide bandwidth must be selected.The Oscillator Filter is described in more detail at Section 7.4.5.2, “The Adaptive Oscillator Filter. 0 Oscillator filter bandwidth is narrow (window for expected OSCCLK edge is one VCOCLK cycle). 1 Oscillator filter bandwidth is wide (window for expected OSCCLK edge is three VCOCLK cycles).
4-0 OSCFILT	**Oscillator Filter Bits** — When using the oscillator a noise filter can be enabled, which filters noise from the OSCCLK and detects if the OSCCLK is qualified or not (quality status shown by bit UPOSC). The f_{VCO} -to- f_{OSC} ratio divided by two must be an integer value. The OSCFILT[4:0] bits must be set to the calculated integer value to enable the oscillator filter). 0x0000 Oscillator Filter disabled. else Oscillator Filter enabled:

7.3.2.22 S12CPMU Protection Register (CPMUPROT)

This register protects the clock configuration registers from accidental overwrite:

CPMUSYNR, CPMUREFDIV, CPMUCLKS, CPMUPLL, CPMUIRCTRIMH/L and CPMUOSC

0x02FB

	7	6	5	4	3	2	1	0
R	0	0	0	0	0	0	0	PROT
W								
Reset	0	0	0	0	0	0	0	0

Figure 7-29. S12CPMU Protection Register (CPMUPROT)

Read: Anytime

Write: Anytime

Field	Description
0 PROT	**Clock Configuration Registers Protection Bit** — This bit protects the clock configuration registers from accidental overwrite (see list of affected registers above). Writing 0x26 to the CPMUPROT register clears the PROT bit, other write accesses set the PROT bit. 0 Protection of clock configuration registers is disabled. 1 Protection of clock configuration registers is enabled. CPMUSYNR, CPMUREFDIV, CPMUCLKS, CPMUPLL, CPMUIRCTRIMH/L and CPMUOSC registers are not writable.

7.3.2.23 Reserved Register CPMUTEST2

NOTE

This reserved register is designed for factory test purposes only, and is not intended for general user access. Writing to this register when in special mode can alter the S12CPMU's functionality.

0x02FC

	7	6	5	4	3	2	1	0
R	0	0	0	0	0	0	0	0
W								
Reset	0	0	0	0	0	0	0	0

= Unimplemented or Reserved

Figure 7-30. Reserved Register CPMUTEST2

Read: Anytime

Write: Only in special mode

7.4 Functional Description

7.4.1 Phase Locked Loop with Internal Filter (PLL)

The PLL is used to generate a high speed PLLCLK based on a low frequency REFCLK.

The REFCLK is by default the IRCCLK which is trimmed to f_{IRC1M_TRIM}=1MHz.

If using the oscillator (OSCE=1) REFCLK will be based on OSCCLK. For increased flexibility, OSCCLK can be divided in a range of 1 to 16 to generate the reference frequency REFCLK using the REFDIV[3:0] bits. Based on the SYNDIV[5:0] bits the PLL generates the VCOCLK by multiplying the reference clock by a 2, 4, 6,... 126, 128. Based on the POSTDIV[4:0] bits the VCOCLK can be divided in a range of 1,2, 3, 4, 5, 6,... to 32 to generate the PLLCLK.

If oscillator is enabled (OSCE=1) $$f_{REF} = \frac{f_{OSC}}{(REFDIV + 1)}$$

If oscillator is disabled (OSCE=0) $$f_{REF} = f_{IRC1M}$$

$$f_{VCO} = 2 \times f_{REF} \times (SYNDIV + 1)$$

If PLL is locked (LOCK=1) $$f_{PLL} = \frac{f_{VCO}}{(POSTDIV + 1)}$$

If PLL is not locked (LOCK=0) $$f_{PLL} = \frac{f_{VCO}}{4}$$

If PLL is selected (PLLSEL=1) $$f_{bus} = \frac{f_{PLL}}{2}$$

NOTE

Although it is possible to set the dividers to command a very high clock frequency, do not exceed the specified bus frequency limit for the MCU.

Several examples of PLL divider settings are shown in Table 7-23. The following rules help to achieve optimum stability and shortest lock time:

- Use lowest possible f_{VCO} / f_{REF} ratio (SYNDIV value).
- Use highest possible REFCLK frequency f_{REF}.

Table 7-23. Examples of PLL Divider Settings

f_{osc}	REFDIV[3:0]	f_{REF}	REFFRQ[1:0]	SYNDIV[5:0]	f_{VCO}	VCOFRQ[1:0]	POSTDIV[4:0]	f_{PLL}	f_{bus}
off	$00	1MHz	00	$1F	64MHz	01	$03	16MHz	8MHz
off	$00	1MHz	00	$1F	64MHz	01	$00	64MHz	32MHz
off	$00	1MHz	00	$0F	32MHz	00	$00	32MHz	16MHz
4MHz	$00	4MHz	01	$03	32MHz	01	$00	32MHz	16MHz

The phase detector inside the PLL compares the feedback clock (FBCLK = VCOCLK/(SYNDIV+1)) with the reference clock (REFCLK = IRC1M or OSCCLK/REFDIV+1)). Correction pulses are generated based on the phase difference between the two signals. The loop filter alters the DC voltage on the internal filter capacitor, based on the width and direction of the correction pulse, which leads to a higher or lower VCO frequency.

The user must select the range of the REFCLK frequency (REFFRQ[1:0] bits) and the range of the VCOCLK frequency (VCOFRQ[1:0] bits) to ensure that the correct PLL loop bandwidth is set.

The lock detector compares the frequencies of the FBCLK and the REFCLK. Therefore the speed of the lock detector is directly proportional to the reference clock frequency. The circuit determines the lock condition based on this comparison.

If PLL LOCK interrupt requests are enabled, the software can wait for an interrupt request and for instance check the LOCK bit. If interrupt requests are disabled, software can poll the LOCK bit continuously (during PLL start-up) or at periodic intervals. In either case, only when the LOCK bit is set, the VCOCLK will have stabilized to the programmed frequency.

- The LOCK bit is a read-only indicator of the locked state of the PLL.
- The LOCK bit is set when the VCO frequency is within the tolerance Δ_{Lock} and is cleared when the VCO frequency is out of the tolerance Δ_{unl}.
- Interrupt requests can occur if enabled (LOCKIE = 1) when the lock condition changes, toggling the LOCK bit.

7.4.2 Startup from Reset

An example of startup of clock system from Reset is given in Figure 7-31.

Figure 7-31. Startup of clock system after Reset

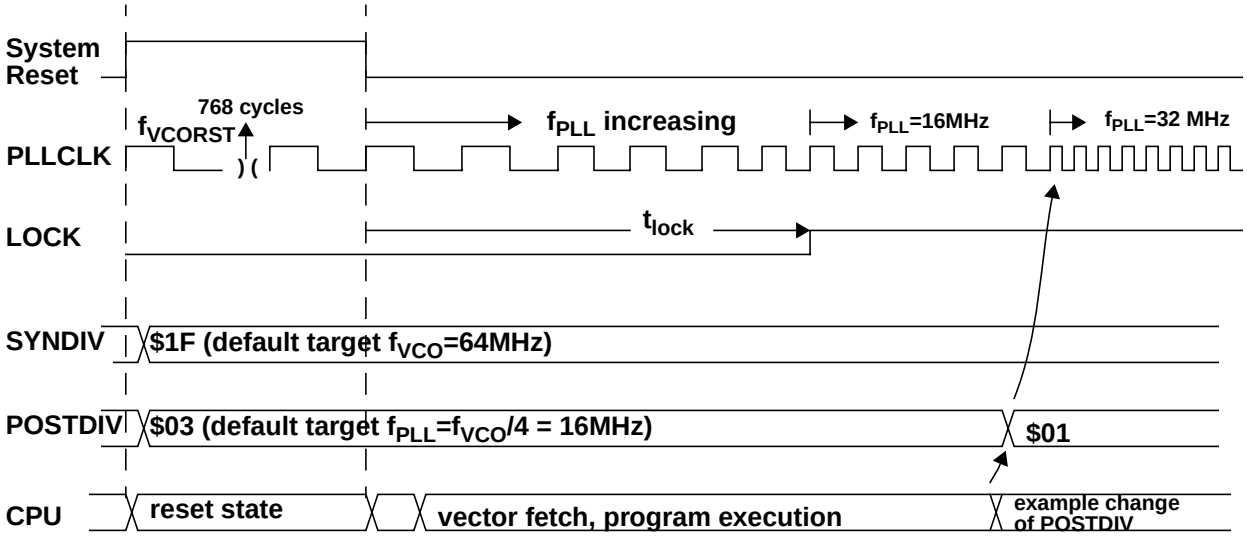

7.4.3 Stop Mode using PLLCLK as Bus Clock

An example of what happens going into Stop Mode and exiting Stop Mode after an interrupt is shown in Figure 7-32. Disable PLL Lock interrupt (LOCKIE=0) before going into Stop Mode.

Figure 7-32. Stop Mode using PLLCLK as Bus Clock

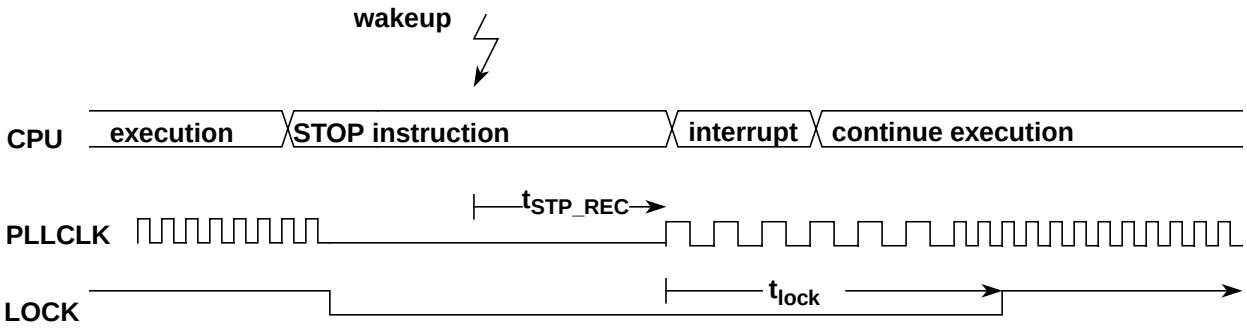

7.4.4 Full Stop Mode using Oscillator Clock as Bus Clock

An example of what happens going into Full Stop Mode and exiting Full Stop Mode after an interrupt is shown in Figure 7-33.

Disable PLL Lock interrupt (LOCKIE=0) and oscillator status change interrupt (OSCIE=0) before going into Full Stop Mode.

Figure 7-33. Full Stop Mode using Oscillator Clock as Bus Clock

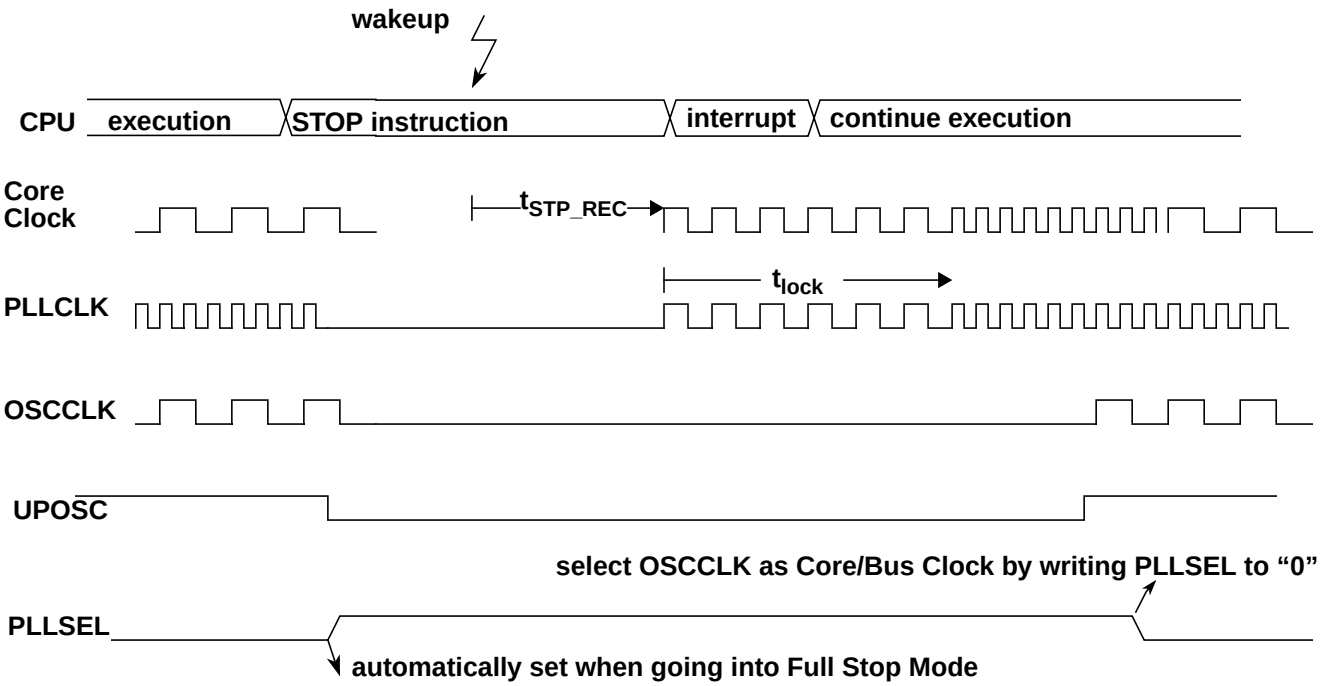

7.4.5 External Oscillator

7.4.5.1 Enabling the External Oscillator

An example of how to use the oscillator as Bus Clock is shown in Figure 7-34.

Figure 7-34. Enabling the External Oscillator

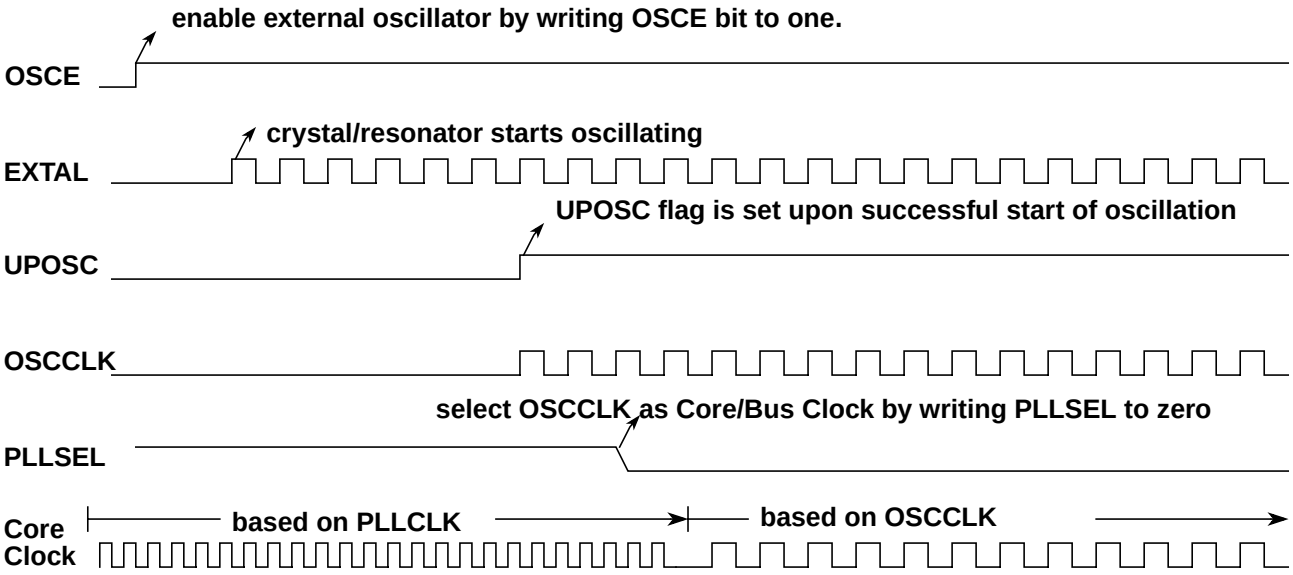

7.4.5.2 The Adaptive Oscillator Filter

A spike in the oscillator clock can disturb the function of the modules driven by this clock.

The adaptive Oscillator Filter includes two features:

1. Filter noise (spikes) from the incoming external oscillator clock. The filter function is illustrated in Figure 7-35.

Figure 7-35. Noise filtered by the Adaptive Oscillator Filter

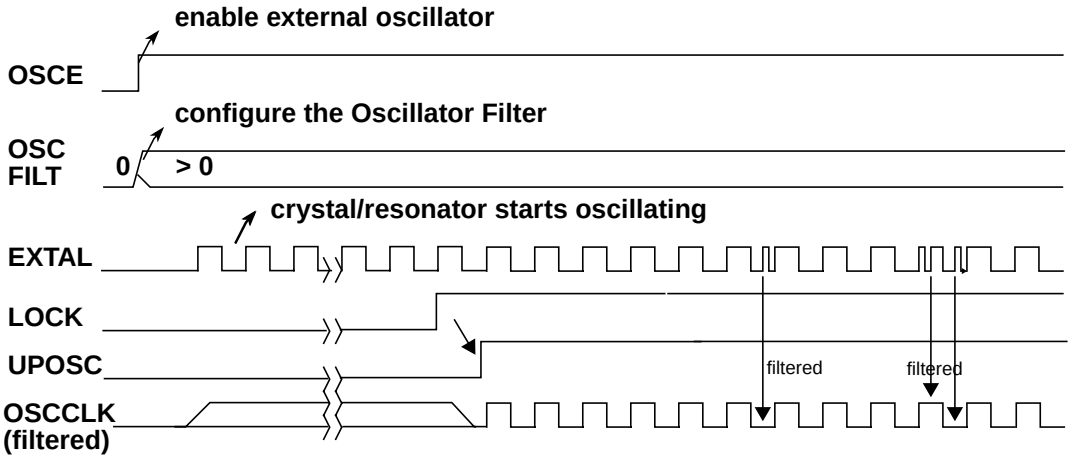

2. Detect severe noise disturbances on the external oscillator clock, which can not be filtered and indicate the critical situation to the software by clearing the UPOSC and LOCK status bit and setting the OSCIF and LOCKIF flag. An example for the detection of critical noise is illustrated in Figure 7-36.

Figure 7-36. Critical noise detected by the Adaptive Oscillator Filter

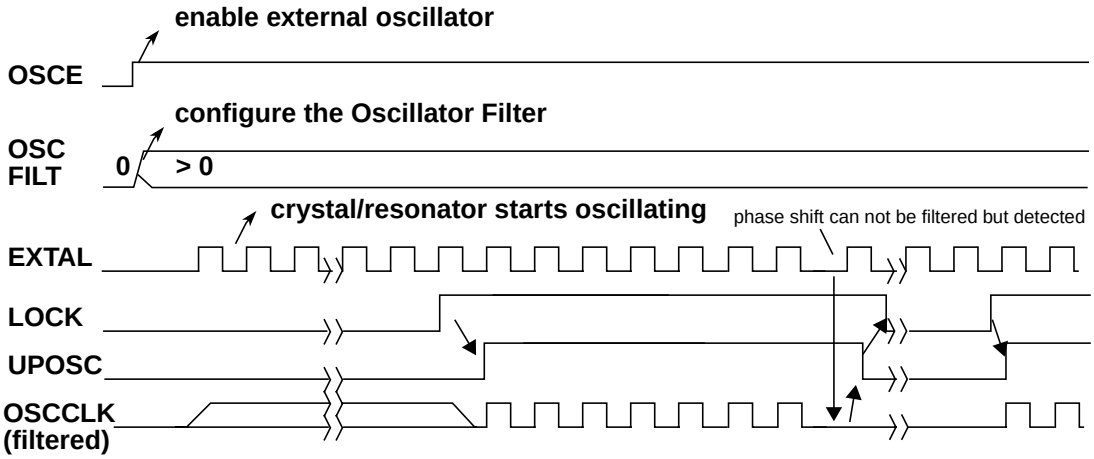

NOTE

If the LOCK bit is clear due to severe noise disturbance on the external oscillator clock the PLLCLK is derived from the VCO clock (with its actual frequency) divided by four (see also Section 7.3.2.3, “S12CPMU Post Divider Register (CPMUPOSTDIV))

The use of the filter function is only possible if the VCOCLK-to-OSCCLK ratio divided by two ((f_{VCO} / f_{OSC})/2) is an integer number. This integer value must be written to the OSCFILT[4:0] bits.

If enabled, the oscillator filter is sampling the incoming oscillator clock signal (EXTAL) with the VCOCLK frequency.

Using VCOCLK, a time window is defined during which an edge of the OSCCLK is expected. In case of OSCBW = 1 the width of this window is three VCOCLK cycles, if the OSCBW = 0 it is one VCOCLK cycle.

The noise detection is active for certain combinations of OSCFILT[4:0] and OSCBW bit settings as shown in Table 7-24

Table 7-24. Noise Detection Settings

OSCFILT[4:0]	OSCBW	Detection	Filter
0	x	disabled	disabled
1	x	disabled	active
2 or 3	0	active	active
	1	disabled	active
>=4	x	active	active

NOTE

If the VCOCLK frequency is higher than 25 MHz the wide bandwidth must be selected (OSCBW = 1).

7.4.6 System Clock Configurations

7.4.6.1 PLL Engaged Internal Mode (PEI)

This mode is the default mode after System Reset or Power-On Reset.

The Bus Clock is based on the PLLCLK, the reference clock for the PLL is internally generated (IRC1M). The PLL is configured to 64 MHz VCOCLK with POSTDIV set to 0x03. If locked (LOCK=1) this results in a PLLCLK of 16 MHz and a Bus Clock of 8 MHz. The PLL can be re-configured to other bus frequencies.

The clock sources for COP and RTI are based on the internal reference clock generator (IRC1M).

7.4.6.2 PLL Engaged External Mode (PEE)

In this mode, the Bus Clock is based on the PLLCLK as well (like PEI). The reference clock for the PLL is based on the external oscillator. The adaptive spike filter and detection logic which uses the VCOCLK to filter and qualify the external oscillator clock can be enabled.

The clock sources for COP and RTI can be based on the internal reference clock generator or on the external oscillator clock.

This mode can be entered from default mode PEI by performing the following steps:

1. Configure the PLL for desired bus frequency.
2. Optionally the adaptive spike filter and detection logic can be enabled by calculating the integer value for the OSCFIL[4:0] bits and setting the bandwidth (OSCBW) accordingly.
3. Enable the external oscillator (OSCE bit).
4. Wait for the PLL being locked (LOCK = 1) and the oscillator to start-up and additionally being qualified if the adaptive spike filter is enabled (UPOSC =1).
5. Clear all flags in the CPMUFLG register to be able to detect any future status bit change.
6. Optionally status interrupts can be enabled (CPMUINT register).

Since the adaptive spike filter (filter and detection logic) uses the VCOCLK to continuously filter and qualify the external oscillator clock, loosing PLL lock status (LOCK=0) means loosing the oscillator status information as well (UPOSC=0).

The impact of loosing the oscillator status in PEE mode is as follows:

- The PLLCLK is derived from the VCO clock (with its actual frequency) divided by four until the PLL locks again.

Application software needs to be prepared to deal with the impact of loosing the oscillator status at any time.

7.4.6.3 PLL Bypassed External Mode (PBE)

In this mode, the Bus Clock is based on the external oscillator clock. The reference clock for the PLL is based on the external oscillator. The adaptive spike filter and detection logic can be enabled which uses the VCOCLK to filter and qualify the external oscillator clock.

The clock sources for COP and RTI can be based on the internal reference clock generator or on the external oscillator clock.

This mode can be entered from default mode PEI by performing the following steps:

1. Make sure the PLL configuration is valid
2. Optionally the adaptive spike filter and detection logic can be enabled by calculating the integer value for the OSCFIL[4:0] bits and setting the bandwidth (OSCBW) accordingly.
3. Enable the external oscillator (OSCE bit)
4. Wait for the PLL being locked (LOCK = 1) and the oscillator to start-up and additionally being qualified if the adaptive spike filter is enabled (UPOSC =1).
5. Clear all flags in the CPMUFLG register to be able to detect any status bit change.
6. Optionally status interrupts can be enabled (CPMUINT register).
7. Select the Oscillator Clock (OSCCLK) as Bus Clock (PLLSEL=0)

Since the adaptive spike filter (filter and detection logic) uses VCOCLK (from PLL) to continuously filter and qualify the external oscillator clock, loosing PLL lock status (LOCK=0) means loosing the oscillator status information as well (UPOSC=0).

The impact of loosing the oscillator status in PBE mode is as follows:

- PLLSEL is set automatically and the Bus Clock is switched back to the PLLCLK.
- The PLLCLK is derived from the VCO clock (with its actual frequency) divided by four until the PLL locks again.

Application software needs to be prepared to deal with the impact of loosing the oscillator status at any time.

In the PBE mode, not every noise disturbance can be indicated by bits LOCK and UPOSC (both bits are based on the Bus Clock domain). There are clock disturbances possible, after which UPOSC and LOCK both stay asserted while occasional pauses on the filtered OSCCLK and resulting Bus Clock occur. The spike filter is still functional and protects the Bus Clock from frequency overshoot due to spikes on the external oscillator clock. The filtered OSCCLK and resulting Bus Clock will pause until the PLL has stabilized again.

7.5 Resets

7.5.1 General

All reset sources are listed in Table 7-25. Refer to MCU specification for related vector addresses and priorities.

Table 7-25. Reset Summary

Reset Source	Local Enable
Power-On Reset (POR)	None
Low Voltage Reset (LVR)	None
External pin $\overline{\text{RESET}}$	None
Illegal Address Reset	None
Clock Monitor Reset	OSCE Bit in CPMUOSC register
COP Reset	CR[2:0] in CPMUCOP register

7.5.2 Description of Reset Operation

Upon detection of any reset of Table 7-25, an internal circuit drives the $\overline{\text{RESET}}$ pin low for 512 PLLCLK cycles. After 512 PLLCLK cycles the $\overline{\text{RESET}}$ pin is released. The reset generator of the S12CPMU waits for additional 256 PLLCLK cycles and then samples the $\overline{\text{RESET}}$ pin to determine the originating source. Table 7-26 shows which vector will be fetched.

Table 7-26. Reset Vector Selection

Sampled $\overline{\text{RESET}}$ Pin (256 cycles after release)	Oscillator monitor fail pending	COP time out pending	Vector Fetch
1	0	0	POR LVR Illegal Address Reset External pin $\overline{\text{RESET}}$
1	1	X	Clock Monitor Reset
1	0	1	COP Reset
0	X	X	POR LVR Illegal Address Reset External pin $\overline{\text{RESET}}$

NOTE

While System Reset is asserted the PLLCLK runs with the frequency f_{VCORST}.

The internal reset of the MCU remains asserted while the reset generator completes the 768 PLLCLK cycles long reset sequence. In case the RESET pin is externally driven low for more than these 768 PLLCLK cycles (External Reset), the internal reset remains asserted longer.

Figure 7-37. RESET Timing

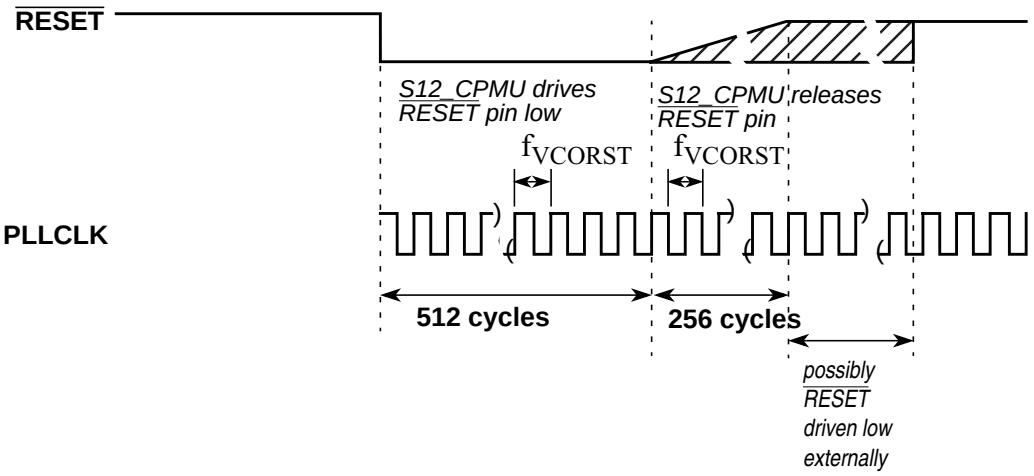

7.5.2.1 Clock Monitor Reset

If the external oscillator is enabled (OSCE=1) in case of loss of oscillation or the oscillator frequency is below the failure assert frequency f_{CMFA} (see device electrical characteristics for values), the S12CPMU generates a Clock Monitor Reset.In Full Stop Mode the external oscillator and the clock monitor are disabled.

7.5.2.2 Computer Operating Properly Watchdog (COP) Reset

The COP (free running watchdog timer) enables the user to check that a program is running and sequencing properly. When the COP is being used, software is responsible for keeping the COP from timing out. If the COP times out it is an indication that the software is no longer being executed in the intended sequence; thus COP reset is generated.

The clock source for the COP is either IRCCLK or OSCCLK depending on the setting of the COPOSCSEL bit. In Stop Mode with PSTP=1 (Pseudo Stop Mode), COPOSCSEL=1 and PCE=1 the COP continues to run, else the COP counter halts in Stop Mode.

Three control bits in the CPMUCOP register allow selection of seven COP time-out periods.

When COP is enabled, the program must write $55 and $AA (in this order) to the CPMUARMCOP register during the selected time-out period. Once this is done, the COP time-out period is restarted. If the program fails to do this and the COP times out, a COP reset is generated. Also, if any value other than $55 or $AA is written, a COP reset generated.

Windowed COP operation is enabled by setting WCOP in the CPMUCOP register. In this mode, writes to the CPMUARMCOP register to clear the COP timer must occur in the last 25% of the selected time-out period. A premature write will immediately reset the part.

7.5.3 Power-On Reset (POR)

The on-chip POR circuitry detects when the internal supply V_{DD} drops below an appropriate voltage level (voltage level not specified in this document because this supply is not visible on device pins). POR is deasserted, if the internal supply V_{DD} exceeds an appropriate voltage level (voltage level not specified in this document because this supply is not visible on device pins).

7.5.4 Low-Voltage Reset (LVR)

The on-chip LVR circuitry detects when one of the supply voltages V_{DD}, V_{DDF} or V_{DDX} drops below an appropriate voltage level. If LVR is deasserted the MCU is fully operational at the specified maximum speed.The LVR assert and deassert levels for the supply voltage VDDX are V_{LVRXA} and V_{LVRXD} and are specified in the device Reference Manual.

7.6 Interrupts

The interrupt/reset vectors requested by the S12CPMU are listed in Table 7-27. Refer to MCU specification for related vector addresses and priorities.

Table 7-27. S12CPMU Interrupt Vectors

Interrupt Source	CCR Mask	Local Enable
RTI time-out interrupt	I bit	CPMUINT (RTIE)
PLL lock interrupt	I bit	CPMUINT (LOCKIE)
Oscillator status interrupt	I bit	CPMUINT (OSCIE)
Low voltage interrupt	I bit	CPMULVCTL (LVIE)
High temperature interrupt	I bit	CPMUHTCTL (HTIE)
Autonomous Periodical Interrupt	I bit	CPMUAPICTL (APIE)

7.6.1 Description of Interrupt Operation

7.6.1.1 Real Time Interrupt (RTI)

The clock source for the RTI is either IRCCLK or OSCCLK depending on the setting of the RTIOSCSEL bit. In Stop Mode with PSTP=1 (Pseudo Stop Mode), RTIOSCSEL=1 and PRE=1 the RTI continues to run, else the RTI counter halts in Stop Mode.

The RTI can be used to generate hardware interrupts at a fixed periodic rate. If enabled (by setting RTIE=1), this interrupt will occur at the rate selected by the CPMURTI register. At the end of the RTI time-out period the RTIF flag is set to one and a new RTI time-out period starts immediately.

A write to the CPMURTI register restarts the RTI time-out period.

7.6.1.2 PLL Lock Interrupt

The S12CPMU generates a PLL Lock interrupt when the lock condition (LOCK status bit) of the PLL changes, either from a locked state to an unlocked state or vice versa. Lock interrupts are locally disabled by setting the LOCKIE bit to zero. The PLL Lock interrupt flag (LOCKIF) is set to 1 when the lock condition has changed, and is cleared to 0 by writing a 1 to the LOCKIF bit.

7.6.1.3 Oscillator Status Interrupt

The Oscillator Filter contains two different features:

1. Filter spikes of the external oscillator clock.

2. Qualify the external oscillator clock.

When the OSCE bit is 0, then UPOSC stays 0. When OSCE=1 and OSCFILT = 0, then the filter is transparent and no spikes are filtered. The UPOSC bit is then set after the LOCK bit is set.

Upon detection of a status change (UPOSC), that is an unqualified oscillation becomes qualified or vice versa, the OSCIF flag is set. Going into Full Stop Mode or disabling the oscillator can also cause a status change of UPOSC.

Also, since the oscillator filter is based on the PLLCLK, any change in PLL configuration or any other event which causes the PLL lock status to be cleared leads to a loss of the oscillator status information as well (UPOSC=0).

Oscillator status change interrupts are locally enabled with the OSCIE bit.

NOTE

loosing the oscillator status (UPOSC=0) affects the clock configuration of the system[1]. This needs to be dealt with in application software.

1. For details please refer to “7.4.6 System Clock Configurations”

7.6.1.4 Low-Voltage Interrupt (LVI)

In FPM the input voltage V_{DDA} is monitored. Whenever V_{DDA} drops below level V_{LVIA}, the status bit LVDS is set to 1. On the other hand, LVDS is reset to 0 when V_{DDA} rises above level V_{LVID}. An interrupt, indicated by flag LVIF = 1, is triggered by any change of the status bit LVDS if interrupt enable bit LVIE = 1.

7.6.1.5 HTI - High Temperature Interrupt

In FPM the junction temperature T_J is monitored. Whenever T_J exceeds level T_{HTIA} the status bit HTDS is set to 1. Vice versa, HTDS is reset to 0 when T_J get below level T_{HTID}. An interrupt, indicated by flag HTIF = 1, is triggered by any change of the status bit HTDS, if interrupt enable bit HTIE = 1.

7.6.1.6 Autonomous Periodical Interrupt (API)

The API sub-block can generate periodical interrupts independent of the clock source of the MCU. To enable the timer, the bit APIFE needs to be set.

The API timer is either clocked by a trimmable internal RC oscillator (ACLK) or the Bus Clock. Timer operation will freeze when MCU clock source is selected and Bus Clock is turned off. The clock source can be selected with bit APICLK. APICLK can only be written when APIFE is not set.

The APIR[15:0] bits determine the interrupt period. APIR[15:0] can only be written when APIFE is cleared. As soon as APIFE is set, the timer starts running for the period selected by APIR[15:0] bits. When the configured time has elapsed, the flag APIF is set. An interrupt, indicated by flag APIF = 1, is triggered if interrupt enable bit APIE = 1. The timer is re-started automatically again after it has set APIF.

The procedure to change APICLK or APIR[15:0] is first to clear APIFE, then write to APICLK or APIR[15:0], and afterwards set APIFE.

The API Trimming bits APITR[5:0] must be set so the minimum period equals 0.2 ms if stable frequency is desired.

See Table 7-17 for the trimming effect of APITR.

NOTE

The first period after enabling the counter by APIFE might be reduced by API start up delay t_{sdel}.

It is possible to generate with the API a waveform at the external pin API_EXTCLK by setting APIFE and enabling the external access with setting APIEA.

7.7 Initialization/Application Information

Chapter 8
Freescale's Scalable Controller Area Network (S12MSCANV3)

Table 8-1. Revision History

Revision Number	Revision Date	Sections Affected	Description of Changes
V03.08	07 Mar 2006		- Internal updates only.
V03.09	04 May 2007	8.3.2.11/8-268	- Corrected mnemonics of code example in CANTBSEL register description
V03.10	19 Aug 2008	8.4.7.4/8-302 8.4.4.5/8-296 8.2/8-253	- Corrected wake-up description - Relocated initialization section - Added note to external pin descriptions for use with integrated physical layer - Minor corrections

8.1 Introduction

Freescale's scalable controller area network (S12MSCANV3) definition is based on the MSCAN12 definition, which is the specific implementation of the MSCAN concept targeted for the M68HC12 microcontroller family.

The module is a communication controller implementing the CAN 2.0A/B protocol as defined in the Bosch specification dated September 1991. For users to fully understand the MSCAN specification, it is recommended that the Bosch specification be read first to familiarize the reader with the terms and concepts contained within this document.

Though not exclusively intended for automotive applications, CAN protocol is designed to meet the specific requirements of a vehicle serial data bus: real-time processing, reliable operation in the EMI environment of a vehicle, cost-effectiveness, and required bandwidth.

MSCAN uses an advanced buffer arrangement resulting in predictable real-time behavior and simplified application software.

8.1.1 Glossary

Table 8-2. Terminology

ACK	Acknowledge of CAN message
CAN	Controller Area Network
CRC	Cyclic Redundancy Code
EOF	End of Frame
FIFO	First-In-First-Out Memory
IFS	Inter-Frame Sequence
SOF	Start of Frame
CPU bus	CPU related read/write data bus
CAN bus	CAN protocol related serial bus
oscillator clock	Direct clock from external oscillator
bus clock	CPU bus realated clock
CAN clock	CAN protocol related clock

8.1.2 Block Diagram

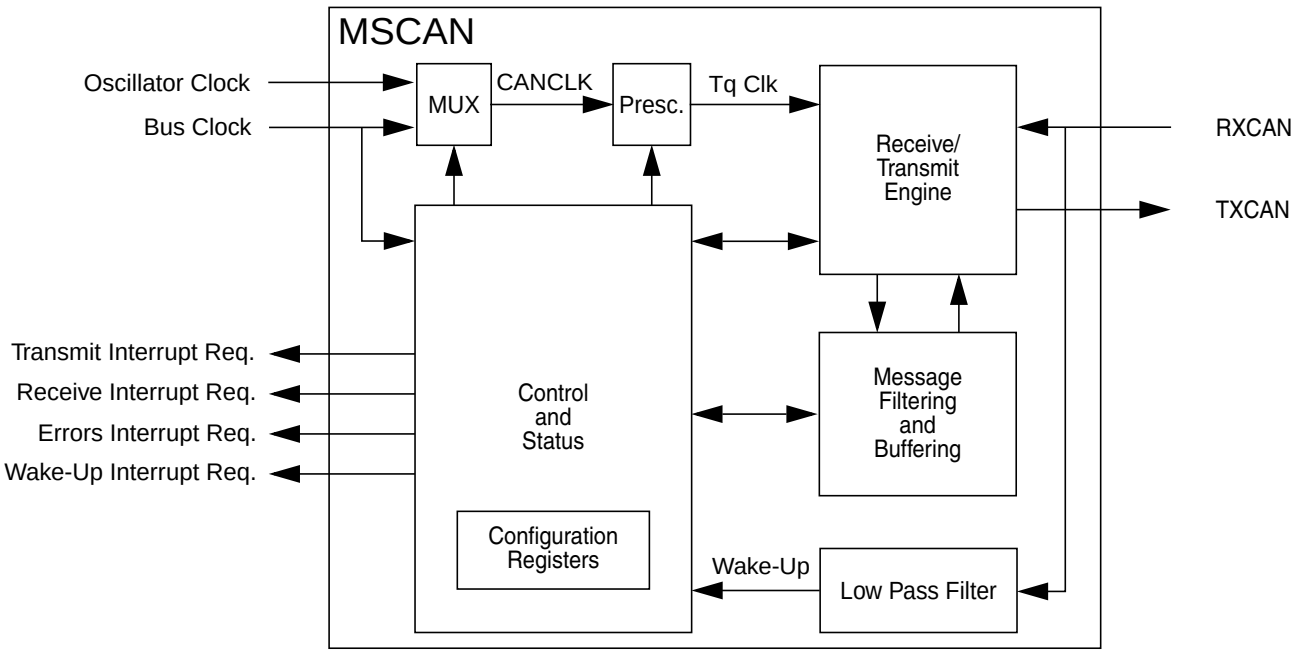

Figure 8-1. MSCAN Block Diagram

8.1.3 Features

The basic features of the MSCAN are as follows:

- Implementation of the CAN protocol — Version 2.0A/B
  - — Standard and extended data frames
  - — Zero to eight bytes data length
  - — Programmable bit rate up to 1 Mbps[1]
  - — Support for remote frames
- Five receive buffers with FIFO storage scheme
- Three transmit buffers with internal prioritization using a "local priority" concept
- Flexible maskable identifier filter supports two full-size (32-bit) extended identifier filters, or four 16-bit filters, or eight 8-bit filters
- Programmable wakeup functionality with integrated low-pass filter
- Programmable loopback mode supports self-test operation
- Programmable listen-only mode for monitoring of CAN bus
- Programmable bus-off recovery functionality
- Separate signalling and interrupt capabilities for all CAN receiver and transmitter error states (warning, error passive, bus-off)
- Programmable MSCAN clock source either bus clock or oscillator clock
- Internal timer for time-stamping of received and transmitted messages
- Three low-power modes: sleep, power down, and MSCAN enable
- Global initialization of configuration registers

8.1.4 Modes of Operation

For a description of the specific MSCAN modes and the module operation related to the system operating modes refer to Section 8.4.4, "Modes of Operation".

8.2 External Signal Description

The MSCAN uses two external pins.

NOTE

On MCUs with an integrated CAN physical interface (transceiver) the MSCAN interface is connected internally to the transceiver interface. In these cases the external availability of signals TXCAN and RXCAN is optional.

8.2.1 RXCAN — CAN Receiver Input Pin

RXCAN is the MSCAN receiver input pin.

1. Depending on the actual bit timing and the clock jitter of the PLL.

8.2.2 TXCAN — CAN Transmitter Output Pin

TXCAN is the MSCAN transmitter output pin. The TXCAN output pin represents the logic level on the CAN bus:

0 = Dominant state
1 = Recessive state

8.2.3 CAN System

A typical CAN system with MSCAN is shown in Figure 8-2. Each CAN station is connected physically to the CAN bus lines through a transceiver device. The transceiver is capable of driving the large current needed for the CAN bus and has current protection against defective CAN or defective stations.

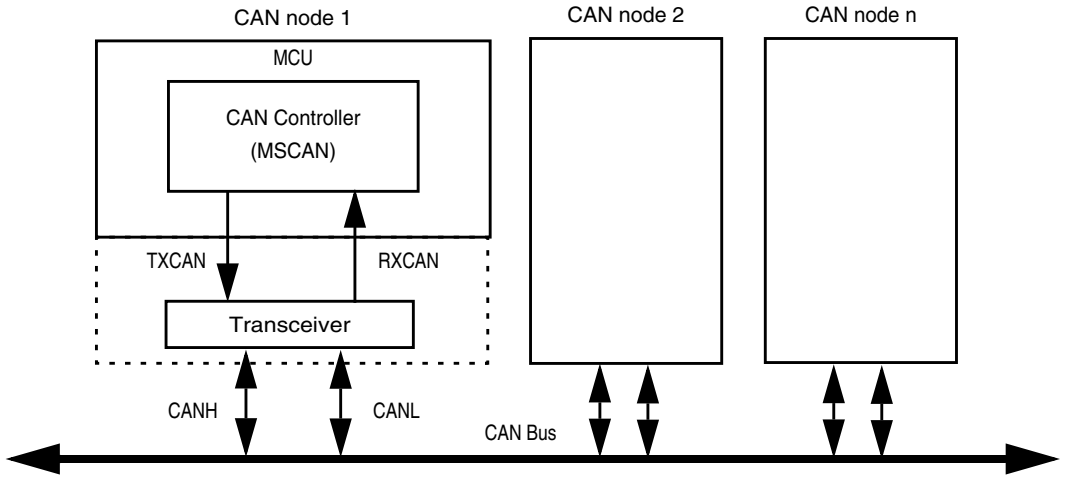

Figure 8-2. CAN System

8.3 Memory Map and Register Definition

This section provides a detailed description of all registers accessible in the MSCAN.

8.3.1 Module Memory Map

Figure 8-3 gives an overview on all registers and their individual bits in the MSCAN memory map. The *register address* results from the addition of *base address* and *address offset*. The *base address* is determined at the MCU level and can be found in the MCU memory map description. The *address offset* is defined at the module level.

The MSCAN occupies 64 bytes in the memory space. The base address of the MSCAN module is determined at the MCU level when the MCU is defined. The register decode map is fixed and begins at the first address of the module address offset.

The detailed register descriptions follow in the order they appear in the register map.

Register Name		Bit 7	6	5	4	3	2	1	Bit 0
0x0000 CANCTL0	R	RXFRM	RXACT	CSWAI	SYNCH	TIME	WUPE	SLPRQ	INITRQ
	W								
0x0001 CANCTL1	R	CANE	CLKSRC	LOOPB	LISTEN	BORM	WUPM	SLPAK	INITAK
	W								
0x0002 CANBTR0	R	SJW1	SJW0	BRP5	BRP4	BRP3	BRP2	BRP1	BRP0
	W								
0x0003 CANBTR1	R	SAMP	TSEG22	TSEG21	TSEG20	TSEG13	TSEG12	TSEG11	TSEG10
	W								
0x0004 CANRFLG	R	WUPIF	CSCIF	RSTAT1	RSTAT0	TSTAT1	TSTAT0	OVRIF	RXF
	W								
0x0005 CANRIER	R	WUPIE	CSCIE	RSTATE1	RSTATE0	TSTATE1	TSTATE0	OVRIE	RXFIE
	W								
0x0006 CANTFLG	R	0	0	0	0	0	TXE2	TXE1	TXE0
	W								
0x0007 CANTIER	R	0	0	0	0	0	TXEIE2	TXEIE1	TXEIE0
	W								
0x0008 CANTARQ	R	0	0	0	0	0	ABTRQ2	ABTRQ1	ABTRQ0
	W								
0x0009 CANTAAK	R	0	0	0	0	0	ABTAK2	ABTAK1	ABTAK0
	W								
0x000A CANTBSEL	R	0	0	0	0	0	TX2	TX1	TX0
	W								
0x000B CANIDAC	R	0	0	IDAM1	IDAM0	0	IDHIT2	IDHIT1	IDHIT0
	W								
0x000C Reserved	R	0	0	0	0	0	0	0	0
	W								
0x000D CANMISC	R	0	0	0	0	0	0	0	BOHOLD
	W								

= Unimplemented or Reserved

Figure 8-3. MSCAN Register Summary

Register Name		Bit 7	6	5	4	3	2	1	Bit 0
0x000E CANRXERR	R	RXERR7	RXERR6	RXERR5	RXERR4	RXERR3	RXERR2	RXERR1	RXERR0
	W								
0x000F CANTXERR	R	TXERR7	TXERR6	TXERR5	TXERR4	TXERR3	TXERR2	TXERR1	TXERR0
	W								
0x0010–0x0013 CANIDAR0–3	R	AC7	AC6	AC5	AC4	AC3	AC2	AC1	AC0
	W								
0x0014–0x0017 CANIDMRx	R	AM7	AM6	AM5	AM4	AM3	AM2	AM1	AM0
	W								
0x0018–0x001B CANIDAR4–7	R	AC7	AC6	AC5	AC4	AC3	AC2	AC1	AC0
	W								
0x001C–0x001F CANIDMR4–7	R	AM7	AM6	AM5	AM4	AM3	AM2	AM1	AM0
	W								
0x0020–0x002F CANRXFG	R	See Section 8.3.3, "Programmer's Model of Message Storage"							
	W								
0x0030–0x003F CANTXFG	R	See Section 8.3.3, "Programmer's Model of Message Storage"							
	W								

= Unimplemented or Reserved

Figure 8-3. MSCAN Register Summary (continued)

8.3.2 Register Descriptions

This section describes in detail all the registers and register bits in the MSCAN module. Each description includes a standard register diagram with an associated figure number. Details of register bit and field function follow the register diagrams, in bit order. All bits of all registers in this module are completely synchronous to internal clocks during a register read.

8.3.2.1 MSCAN Control Register 0 (CANCTL0)

The CANCTL0 register provides various control bits of the MSCAN module as described below.

Module Base + 0x0000 Access: User read/write(1)

	7	6	5	4	3	2	1	0
R	RXFRM	RXACT	CSWAI	SYNCH	TIME	WUPE	SLPRQ	INITRQ
W								
Reset:	0	0	0	0	0	0	0	1

= Unimplemented

Figure 8-4. MSCAN Control Register 0 (CANCTL0)

1. Read: Anytime
   Write: Anytime when out of initialization mode; exceptions are read-only RXACT and SYNCH, RXFRM (which is set by the module only), and INITRQ (which is also writable in initialization mode)

NOTE

The CANCTL0 register, except WUPE, INITRQ, and SLPRQ, is held in the reset state when the initialization mode is active (INITRQ = 1 and INITAK = 1). This register is writable again as soon as the initialization mode is exited (INITRQ = 0 and INITAK = 0).

Table 8-3. CANCTL0 Register Field Descriptions

Field	Description
7 RXFRM(1)	**Received Frame Flag** — This bit is read and clear only. It is set when a receiver has received a valid message correctly, independently of the filter configuration. After it is set, it remains set until cleared by software or reset. Clearing is done by writing a 1. Writing a 0 is ignored. This bit is not valid in loopback mode. 0 No valid message was received since last clearing this flag 1 A valid message was received since last clearing of this flag
6 RXACT	**Receiver Active Status** — This read-only flag indicates the MSCAN is receiving a message. The flag is controlled by the receiver front end. This bit is not valid in loopback mode. 0 MSCAN is transmitting or idle[2] 1 MSCAN is receiving a message (including when arbitration is lost)(2)
5 CSWAI(3)	**CAN Stops in Wait Mode** — Enabling this bit allows for lower power consumption in wait mode by disabling all the clocks at the CPU bus interface to the MSCAN module. 0 The module is not affected during wait mode 1 The module ceases to be clocked during wait mode
4 SYNCH	**Synchronized Status** — This read-only flag indicates whether the MSCAN is synchronized to the CAN bus and able to participate in the communication process. It is set and cleared by the MSCAN. 0 MSCAN is not synchronized to the CAN bus 1 MSCAN is synchronized to the CAN bus
3 TIME	**Timer Enable** — This bit activates an internal 16-bit wide free running timer which is clocked by the bit clock rate. If the timer is enabled, a 16-bit time stamp will be assigned to each transmitted/received message within the active TX/RX buffer. Right after the EOF of a valid message on the CAN bus, the time stamp is written to the highest bytes (0x000E, 0x000F) in the appropriate buffer (see Section 8.3.3, "Programmer's Model of Message Storage"). The internal timer is reset (all bits set to 0) when disabled. This bit is held low in initialization mode. 0 Disable internal MSCAN timer 1 Enable internal MSCAN timer

Table 8-3. CANCTL0 Register Field Descriptions (continued)

Field	Description
2 WUPE[4]	**Wake-Up Enable** — This configuration bit allows the MSCAN to restart from sleep mode or from power down mode (entered from sleep) when traffic on CAN is detected (see Section 8.4.5.5, "MSCAN Sleep Mode"). This bit must be configured before sleep mode entry for the selected function to take effect. 0 Wake-up disabled — The MSCAN ignores traffic on CAN 1 Wake-up enabled — The MSCAN is able to restart
1 SLPRQ[5]	**Sleep Mode Request** — This bit requests the MSCAN to enter sleep mode, which is an internal power saving mode (see Section 8.4.5.5, "MSCAN Sleep Mode"). The sleep mode request is serviced when the CAN bus is idle, i.e., the module is not receiving a message and all transmit buffers are empty. The module indicates entry to sleep mode by setting SLPAK = 1 (see Section 8.3.2.2, "MSCAN Control Register 1 (CANCTL1)"). SLPRQ cannot be set while the WUPIF flag is set (see Section 8.3.2.5, "MSCAN Receiver Flag Register (CANRFLG)"). Sleep mode will be active until SLPRQ is cleared by the CPU or, depending on the setting of WUPE, the MSCAN detects activity on the CAN bus and clears SLPRQ itself. 0 Running — The MSCAN functions normally 1 Sleep mode request — The MSCAN enters sleep mode when CAN bus idle
0 INITRQ[6],[7]	**Initialization Mode Request** — When this bit is set by the CPU, the MSCAN skips to initialization mode (see Section 8.4.4.5, "MSCAN Initialization Mode"). Any ongoing transmission or reception is aborted and synchronization to the CAN bus is lost. The module indicates entry to initialization mode by setting INITAK = 1 (Section 8.3.2.2, "MSCAN Control Register 1 (CANCTL1)"). The following registers enter their hard reset state and restore their default values: CANCTL0[8], CANRFLG[9], CANRIER[10], CANTFLG, CANTIER, CANTARQ, CANTAAK, and CANTBSEL. The registers CANCTL1, CANBTR0, CANBTR1, CANIDAC, CANIDAR0-7, and CANIDMR0-7 can only be written by the CPU when the MSCAN is in initialization mode (INITRQ = 1 and INITAK = 1). The values of the error counters are not affected by initialization mode. When this bit is cleared by the CPU, the MSCAN restarts and then tries to synchronize to the CAN bus. If the MSCAN is not in bus-off state, it synchronizes after 11 consecutive recessive bits on the CAN bus; if the MSCAN is in bus-off state, it continues to wait for 128 occurrences of 11 consecutive recessive bits. Writing to other bits in CANCTL0, CANRFLG, CANRIER, CANTFLG, or CANTIER must be done only after initialization mode is exited, which is INITRQ = 0 and INITAK = 0. 0 Normal operation 1 MSCAN in initialization mode

1. The MSCAN must be in normal mode for this bit to become set.
2. See the Bosch CAN 2.0A/B specification for a detailed definition of transmitter and receiver states.
3. In order to protect from accidentally violating the CAN protocol, TXCAN is immediately forced to a recessive state when the CPU enters wait (CSWAI = 1) or stop mode (see Section 8.4.5.2, "Operation in Wait Mode" and Section 8.4.5.3, "Operation in Stop Mode").
4. The CPU has to make sure that the WUPE register and the WUPIE wake-up interrupt enable register (see Section 8.3.2.6, "MSCAN Receiver Interrupt Enable Register (CANRIER)) is enabled, if the recovery mechanism from stop or wait is required.
5. The CPU cannot clear SLPRQ before the MSCAN has entered sleep mode (SLPRQ = 1 and SLPAK = 1).
6. The CPU cannot clear INITRQ before the MSCAN has entered initialization mode (INITRQ = 1 and INITAK = 1).
7. In order to protect from accidentally violating the CAN protocol, TXCAN is immediately forced to a recessive state when the initialization mode is requested by the CPU. Thus, the recommended procedure is to bring the MSCAN into sleep mode (SLPRQ = 1 and SLPAK = 1) before requesting initialization mode.
8. Not including WUPE, INITRQ, and SLPRQ.
9. TSTAT1 and TSTAT0 are not affected by initialization mode.
10. RSTAT1 and RSTAT0 are not affected by initialization mode.

8.3.2.2 MSCAN Control Register 1 (CANCTL1)

The CANCTL1 register provides various control bits and handshake status information of the MSCAN module as described below.

Module Base + 0x0001 Access: User read/write(1)

	7	6	5	4	3	2	1	0
R	CANE	CLKSRC	LOOPB	LISTEN	BORM	WUPM	SLPAK	INITAK
W								
Reset:	0	0	0	1	0	0	0	1

= Unimplemented

Figure 8-5. MSCAN Control Register 1 (CANCTL1)

1. Read: Anytime
   Write: Anytime in initialization mode (INITRQ = 1 and INITAK = 1); CANE is write once

Table 8-4. CANCTL1 Register Field Descriptions

Field	Description
7 CANE	**MSCAN Enable** 0 MSCAN module is disabled 1 MSCAN module is enabled
6 CLKSRC	**MSCAN Clock Source** — This bit defines the clock source for the MSCAN module (only for systems with a clock generation module; Section 8.4.3.2, "Clock System," and Section Figure 8-43., "MSCAN Clocking Scheme,"). 0 MSCAN clock source is the oscillator clock 1 MSCAN clock source is the bus clock
5 LOOPB	**Loopback Self Test Mode** — When this bit is set, the MSCAN performs an internal loopback which can be used for self test operation. The bit stream output of the transmitter is fed back to the receiver internally. The RXCAN input is ignored and the TXCAN output goes to the recessive state (logic 1). The MSCAN behaves as it does normally when transmitting and treats its own transmitted message as a message received from a remote node. In this state, the MSCAN ignores the bit sent during the ACK slot in the CAN frame acknowledge field to ensure proper reception of its own message. Both transmit and receive interrupts are generated. 0 Loopback self test disabled 1 Loopback self test enabled
4 LISTEN	**Listen Only Mode** — This bit configures the MSCAN as a CAN bus monitor. When LISTEN is set, all valid CAN messages with matching ID are received, but no acknowledgement or error frames are sent out (see Section 8.4.4.4, "Listen-Only Mode"). In addition, the error counters are frozen. Listen only mode supports applications which require "hot plugging" or throughput analysis. The MSCAN is unable to transmit any messages when listen only mode is active. 0 Normal operation 1 Listen only mode activated
3 BORM	**Bus-Off Recovery Mode** — This bits configures the bus-off state recovery mode of the MSCAN. Refer to Section 8.5.2, "Bus-Off Recovery," for details. 0 Automatic bus-off recovery (see Bosch CAN 2.0A/B protocol specification) 1 Bus-off recovery upon user request

Table 8-4. CANCTL1 Register Field Descriptions (continued)

Field	Description
2 WUPM	**Wake-Up Mode** — If WUPE in CANCTL0 is enabled, this bit defines whether the integrated low-pass filter is applied to protect the MSCAN from spurious wake-up (see Section 8.4.5.5, "MSCAN Sleep Mode"). 0 MSCAN wakes up on any dominant level on the CAN bus 1 MSCAN wakes up only in case of a dominant pulse on the CAN bus that has a length of T_{wup}
1 SLPAK	**Sleep Mode Acknowledge** — This flag indicates whether the MSCAN module has entered sleep mode (see Section 8.4.5.5, "MSCAN Sleep Mode"). It is used as a handshake flag for the SLPRQ sleep mode request. Sleep mode is active when SLPRQ = 1 and SLPAK = 1. Depending on the setting of WUPE, the MSCAN will clear the flag if it detects activity on the CAN bus while in sleep mode. 0 Running — The MSCAN operates normally 1 Sleep mode active — The MSCAN has entered sleep mode
0 INITAK	**Initialization Mode Acknowledge** — This flag indicates whether the MSCAN module is in initialization mode (see Section 8.4.4.5, "MSCAN Initialization Mode"). It is used as a handshake flag for the INITRQ initialization mode request. Initialization mode is active when INITRQ = 1 and INITAK = 1. The registers CANCTL1, CANBTR0, CANBTR1, CANIDAC, CANIDAR0–CANIDAR7, and CANIDMR0–CANIDMR7 can be written only by the CPU when the MSCAN is in initialization mode. 0 Running — The MSCAN operates normally 1 Initialization mode active — The MSCAN has entered initialization mode

8.3.2.3 MSCAN Bus Timing Register 0 (CANBTR0)

The CANBTR0 register configures various CAN bus timing parameters of the MSCAN module.

Module Base + 0x0002 — Access: User read/write(1)

	7	6	5	4	3	2	1	0
R W	SJW1	SJW0	BRP5	BRP4	BRP3	BRP2	BRP1	BRP0
Reset:	0	0	0	0	0	0	0	0

Figure 8-6. MSCAN Bus Timing Register 0 (CANBTR0)

1. Read: Anytime
   Write: Anytime in initialization mode (INITRQ = 1 and INITAK = 1)

Table 8-5. CANBTR0 Register Field Descriptions

Field	Description
7-6 SJW[1:0]	**Synchronization Jump Width** — The synchronization jump width defines the maximum number of time quanta (Tq) clock cycles a bit can be shortened or lengthened to achieve resynchronization to data transitions on the CAN bus (see Table 8-6).
5-0 BRP[5:0]	**Baud Rate Prescaler** — These bits determine the time quanta (Tq) clock which is used to build up the bit timing (see Table 8-7).

Table 8-6. Synchronization Jump Width

SJW1	SJW0	Synchronization Jump Width
0	0	1 Tq clock cycle

Table 8-6. Synchronization Jump Width (continued)

SJW1	SJW0	Synchronization Jump Width
0	1	2 Tq clock cycles
1	0	3 Tq clock cycles
1	1	4 Tq clock cycles

Table 8-7. Baud Rate Prescaler

BRP5	BRP4	BRP3	BRP2	BRP1	BRP0	Prescaler value (P)
0	0	0	0	0	0	1
0	0	0	0	0	1	2
0	0	0	0	1	0	3
0	0	0	0	1	1	4
:	:	:	:	:	:	:
1	1	1	1	1	1	64

8.3.2.4 MSCAN Bus Timing Register 1 (CANBTR1)

The CANBTR1 register configures various CAN bus timing parameters of the MSCAN module.

Module Base + 0x0003 Access: User read/write(1)

	7	6	5	4	3	2	1	0
R W	SAMP	TSEG22	TSEG21	TSEG20	TSEG13	TSEG12	TSEG11	TSEG10
Reset:	0	0	0	0	0	0	0	0

Figure 8-7. MSCAN Bus Timing Register 1 (CANBTR1)

1. Read: Anytime
   Write: Anytime in initialization mode (INITRQ = 1 and INITAK = 1)

Table 8-8. CANBTR1 Register Field Descriptions

Field	Description
7 SAMP	**Sampling** — This bit determines the number of CAN bus samples taken per bit time. 0 One sample per bit. 1 Three samples per bit(1). If SAMP = 0, the resulting bit value is equal to the value of the single bit positioned at the sample point. If SAMP = 1, the resulting bit value is determined by using majority rule on the three total samples. For higher bit rates, it is recommended that only one sample is taken per bit time (SAMP = 0).
6-4 TSEG2[2:0]	**Time Segment 2** — Time segments within the bit time fix the number of clock cycles per bit time and the location of the sample point (see Figure 8-44). Time segment 2 (TSEG2) values are programmable as shown in Table 8-9.
3-0 TSEG1[3:0]	**Time Segment 1** — Time segments within the bit time fix the number of clock cycles per bit time and the location of the sample point (see Figure 8-44). Time segment 1 (TSEG1) values are programmable as shown in Table 8-10.

1. In this case, PHASE_SEG1 must be at least 2 time quanta (Tq).

Table 8-9. Time Segment 2 Values

TSEG22	TSEG21	TSEG20	Time Segment 2
0	0	0	1 Tq clock cycle(1)
0	0	1	2 Tq clock cycles
:	:	:	:
1	1	0	7 Tq clock cycles
1	1	1	8 Tq clock cycles

1. This setting is not valid. Please refer to Table 8-37 for valid settings.

Table 8-10. Time Segment 1 Values

TSEG13	TSEG12	TSEG11	TSEG10	Time segment 1
0	0	0	0	1 Tq clock cycle(1)
0	0	0	1	2 Tq clock cycles[1]
0	0	1	0	3 Tq clock cycles[1]
0	0	1	1	4 Tq clock cycles
:	:	:	:	:
1	1	1	0	15 Tq clock cycles
1	1	1	1	16 Tq clock cycles

1. This setting is not valid. Please refer to Table 8-37 for valid settings.

The bit time is determined by the oscillator frequency, the baud rate prescaler, and the number of time quanta (Tq) clock cycles per bit (as shown in Table 8-9 and Table 8-10).

Eqn. 8-1

$$\text{Bit Time} = \frac{(\text{Prescaler value})}{f_{CANCLK}} \bullet (1 + \text{TimeSegment1} + \text{TimeSegment2})$$

8.3.2.5 MSCAN Receiver Flag Register (CANRFLG)

A flag can be cleared only by software (writing a 1 to the corresponding bit position) when the condition which caused the setting is no longer valid. Every flag has an associated interrupt enable bit in the CANRIER register.

Module Base + 0x0004 Access: User read/write(1)

	7	6	5	4	3	2	1	0
R	WUPIF	CSCIF	RSTAT1	RSTAT0	TSTAT1	TSTAT0	OVRIF	RXF
W								
Reset:	0	0	0	0	0	0	0	0

= Unimplemented

Figure 8-8. MSCAN Receiver Flag Register (CANRFLG)

1. Read: Anytime
   Write: Anytime when not in initialization mode, except RSTAT[1:0] and TSTAT[1:0] flags which are read-only; write of 1 clears flag; write of 0 is ignored

NOTE

The CANRFLG register is held in the reset state[1] when the initialization mode is active (INITRQ = 1 and INITAK = 1). This register is writable again as soon as the initialization mode is exited (INITRQ = 0 and INITAK = 0).

Table 8-11. CANRFLG Register Field Descriptions

Field	Description
7 WUPIF	**Wake-Up Interrupt Flag** — If the MSCAN detects CAN bus activity while in sleep mode (see Section 8.4.5.5, "MSCAN Sleep Mode,") and WUPE = 1 in CANTCTL0 (see Section 8.3.2.1, "MSCAN Control Register 0 (CANCTL0)"), the module will set WUPIF. If not masked, a wake-up interrupt is pending while this flag is set. 0 No wake-up activity observed while in sleep mode 1 MSCAN detected activity on the CAN bus and requested wake-up
6 CSCIF	**CAN Status Change Interrupt Flag** — This flag is set when the MSCAN changes its current CAN bus status due to the actual value of the transmit error counter (TEC) and the receive error counter (REC). An additional 4-bit (RSTAT[1:0], TSTAT[1:0]) status register, which is split into separate sections for TEC/REC, informs the system on the actual CAN bus status (see Section 8.3.2.6, "MSCAN Receiver Interrupt Enable Register (CANRIER)"). If not masked, an error interrupt is pending while this flag is set. CSCIF provides a blocking interrupt. That guarantees that the receiver/transmitter status bits (RSTAT/TSTAT) are only updated when no CAN status change interrupt is pending. If the TECs/RECs change their current value after the CSCIF is asserted, which would cause an additional state change in the RSTAT/TSTAT bits, these bits keep their status until the current CSCIF interrupt is cleared again. 0 No change in CAN bus status occurred since last interrupt 1 MSCAN changed current CAN bus status
5-4 RSTAT[1:0]	**Receiver Status Bits** — The values of the error counters control the actual CAN bus status of the MSCAN. As soon as the status change interrupt flag (CSCIF) is set, these bits indicate the appropriate receiver related CAN bus status of the MSCAN. The coding for the bits RSTAT1, RSTAT0 is: 00 RxOK: 0 ≤ receive error counter ≤ 96 01 RxWRN: 96 < receive error counter ≤ 127 10 RxERR: 127 < receive error counter 11 Bus-off(1): transmit error counter > 255

1. The RSTAT[1:0], TSTAT[1:0] bits are not affected by initialization mode.

Table 8-11. CANRFLG Register Field Descriptions (continued)

Field	Description
3-2 TSTAT[1:0]	**Transmitter Status Bits** — The values of the error counters control the actual CAN bus status of the MSCAN. As soon as the status change interrupt flag (CSCIF) is set, these bits indicate the appropriate transmitter related CAN bus status of the MSCAN. The coding for the bits TSTAT1, TSTAT0 is: 00 TxOK: 0 ≤ transmit error counter ≤ 96 01 TxWRN: 96 < transmit error counter ≤ 127 10 TxERR: 127 < transmit error counter ≤ 255 11 Bus-Off: transmit error counter > 255
1 OVRIF	**Overrun Interrupt Flag** — This flag is set when a data overrun condition occurs. If not masked, an error interrupt is pending while this flag is set. 0 No data overrun condition 1 A data overrun detected
0 RXF(2)	**Receive Buffer Full Flag** — RXF is set by the MSCAN when a new message is shifted in the receiver FIFO. This flag indicates whether the shifted buffer is loaded with a correctly received message (matching identifier, matching cyclic redundancy code (CRC) and no other errors detected). After the CPU has read that message from the RxFG buffer in the receiver FIFO, the RXF flag must be cleared to release the buffer. A set RXF flag prohibits the shifting of the next FIFO entry into the foreground buffer (RxFG). If not masked, a receive interrupt is pending while this flag is set. 0 No new message available within the RxFG 1 The receiver FIFO is not empty. A new message is available in the RxFG

1. Redundant Information for the most critical CAN bus status which is "bus-off". This only occurs if the Tx error counter exceeds a number of 255 errors. Bus-off affects the receiver state. As soon as the transmitter leaves its bus-off state the receiver state skips to RxOK too. Refer also to TSTAT[1:0] coding in this register.
2. To ensure data integrity, do not read the receive buffer registers while the RXF flag is cleared. For MCUs with dual CPUs, reading the receive buffer registers while the RXF flag is cleared may result in a CPU fault condition.

8.3.2.6 MSCAN Receiver Interrupt Enable Register (CANRIER)

This register contains the interrupt enable bits for the interrupt flags described in the CANRFLG register.

Module Base + 0x0005 Access: User read/write(1)

	7	6	5	4	3	2	1	0
R W	WUPIE	CSCIE	RSTATE1	RSTATE0	TSTATE1	TSTATE0	OVRIE	RXFIE
Reset:	0	0	0	0	0	0	0	0

Figure 8-9. MSCAN Receiver Interrupt Enable Register (CANRIER)

1. Read: Anytime
   Write: Anytime when not in initialization mode

NOTE

The CANRIER register is held in the reset state when the initialization mode is active (INITRQ=1 and INITAK=1). This register is writable when not in initialization mode (INITRQ=0 and INITAK=0).

The RSTATE[1:0], TSTATE[1:0] bits are not affected by initialization mode.

Table 8-12. CANRIER Register Field Descriptions

Field	Description
7 WUPIE[1]	**Wake-Up Interrupt Enable** 0 No interrupt request is generated from this event. 1 A wake-up event causes a Wake-Up interrupt request.
6 CSCIE	**CAN Status Change Interrupt Enable** 0 No interrupt request is generated from this event. 1 A CAN Status Change event causes an error interrupt request.
5-4 RSTATE[1:0]	**Receiver Status Change Enable** — These RSTAT enable bits control the sensitivity level in which receiver state changes are causing CSCIF interrupts. Independent of the chosen sensitivity level the RSTAT flags continue to indicate the actual receiver state and are only updated if no CSCIF interrupt is pending. 00 Do not generate any CSCIF interrupt caused by receiver state changes. 01 Generate CSCIF interrupt only if the receiver enters or leaves "bus-off" state. Discard other receiver state changes for generating CSCIF interrupt. 10 Generate CSCIF interrupt only if the receiver enters or leaves "RxErr" or "bus-off"[2] state. Discard other receiver state changes for generating CSCIF interrupt. 11 Generate CSCIF interrupt on all state changes.
3-2 TSTATE[1:0]	**Transmitter Status Change Enable** — These TSTAT enable bits control the sensitivity level in which transmitter state changes are causing CSCIF interrupts. Independent of the chosen sensitivity level, the TSTAT flags continue to indicate the actual transmitter state and are only updated if no CSCIF interrupt is pending. 00 Do not generate any CSCIF interrupt caused by transmitter state changes. 01 Generate CSCIF interrupt only if the transmitter enters or leaves "bus-off" state. Discard other transmitter state changes for generating CSCIF interrupt. 10 Generate CSCIF interrupt only if the transmitter enters or leaves "TxErr" or "bus-off" state. Discard other transmitter state changes for generating CSCIF interrupt. 11 Generate CSCIF interrupt on all state changes.
1 OVRIE	**Overrun Interrupt Enable** 0 No interrupt request is generated from this event. 1 An overrun event causes an error interrupt request.
0 RXFIE	**Receiver Full Interrupt Enable** 0 No interrupt request is generated from this event. 1 A receive buffer full (successful message reception) event causes a receiver interrupt request.

1. WUPIE and WUPE (see Section 8.3.2.1, "MSCAN Control Register 0 (CANCTL0)") must both be enabled if the recovery mechanism from stop or wait is required.
2. Bus-off state is defined by the CAN standard (see Bosch CAN 2.0A/B protocol specification: for only transmitters. Because the only possible state change for the transmitter from bus-off to TxOK also forces the receiver to skip its current state to RxOK, the coding of the RXSTAT[1:0] flags define an additional bus-off state for the receiver (see Section 8.3.2.5, "MSCAN Receiver Flag Register (CANRFLG)").

8.3.2.7 MSCAN Transmitter Flag Register (CANTFLG)

The transmit buffer empty flags each have an associated interrupt enable bit in the CANTIER register.

Module Base + 0x0006 Access: User read/write(1)

	7	6	5	4	3	2	1	0
R	0	0	0	0	0	TXE2	TXE1	TXE0
W								
Reset:	0	0	0	0	0	1	1	1

= Unimplemented

Figure 8-10. MSCAN Transmitter Flag Register (CANTFLG)

1. Read: Anytime
   Write: Anytime when not in initialization mode; write of 1 clears flag, write of 0 is ignored

NOTE

The CANTFLG register is held in the reset state when the initialization mode is active (INITRQ = 1 and INITAK = 1). This register is writable when not in initialization mode (INITRQ = 0 and INITAK = 0).

Table 8-13. CANTFLG Register Field Descriptions

Field	Description
2-0 TXE[2:0]	**Transmitter Buffer Empty** — This flag indicates that the associated transmit message buffer is empty, and thus not scheduled for transmission. The CPU must clear the flag after a message is set up in the transmit buffer and is due for transmission. The MSCAN sets the flag after the message is sent successfully. The flag is also set by the MSCAN when the transmission request is successfully aborted due to a pending abort request (see Section 8.3.2.9, "MSCAN Transmitter Message Abort Request Register (CANTARQ)"). If not masked, a transmit interrupt is pending while this flag is set. Clearing a TXEx flag also clears the corresponding ABTAKx (see Section 8.3.2.10, "MSCAN Transmitter Message Abort Acknowledge Register (CANTAAK)"). When a TXEx flag is set, the corresponding ABTRQx bit is cleared (see Section 8.3.2.9, "MSCAN Transmitter Message Abort Request Register (CANTARQ)"). When listen-mode is active (see Section 8.3.2.2, "MSCAN Control Register 1 (CANCTL1)") the TXEx flags cannot be cleared and no transmission is started. Read and write accesses to the transmit buffer will be blocked, if the corresponding TXEx bit is cleared (TXEx = 0) and the buffer is scheduled for transmission. 0 The associated message buffer is full (loaded with a message due for transmission) 1 The associated message buffer is empty (not scheduled)

8.3.2.8 MSCAN Transmitter Interrupt Enable Register (CANTIER)

This register contains the interrupt enable bits for the transmit buffer empty interrupt flags.

Module Base + 0x0007 Access: User read/write(1)

	7	6	5	4	3	2	1	0
R	0	0	0	0	0	TXEIE2	TXEIE1	TXEIE0
W								
Reset:	0	0	0	0	0	0	0	0

= Unimplemented

Figure 8-11. MSCAN Transmitter Interrupt Enable Register (CANTIER)

1. Read: Anytime
   Write: Anytime when not in initialization mode

NOTE

The CANTIER register is held in the reset state when the initialization mode is active (INITRQ = 1 and INITAK = 1). This register is writable when not in initialization mode (INITRQ = 0 and INITAK = 0).

Table 8-14. CANTIER Register Field Descriptions

Field	Description
2-0 TXEIE[2:0]	**Transmitter Empty Interrupt Enable** 0 No interrupt request is generated from this event. 1 A transmitter empty (transmit buffer available for transmission) event causes a transmitter empty interrupt request.

8.3.2.9 MSCAN Transmitter Message Abort Request Register (CANTARQ)

The CANTARQ register allows abort request of queued messages as described below.

Module Base + 0x0008 Access: User read/write(1)

	7	6	5	4	3	2	1	0
R	0	0	0	0	0	ABTRQ2	ABTRQ1	ABTRQ0
W								
Reset:	0	0	0	0	0	0	0	0

= Unimplemented

Figure 8-12. MSCAN Transmitter Message Abort Request Register (CANTARQ)

1. Read: Anytime
   Write: Anytime when not in initialization mode

NOTE

The CANTARQ register is held in the reset state when the initialization mode is active (INITRQ = 1 and INITAK = 1). This register is writable when not in initialization mode (INITRQ = 0 and INITAK = 0).

Table 8-15. CANTARQ Register Field Descriptions

Field	Description
2-0 ABTRQ[2:0]	**Abort Request** — The CPU sets the ABTRQx bit to request that a scheduled message buffer (TXEx = 0) be aborted. The MSCAN grants the request if the message has not already started transmission, or if the transmission is not successful (lost arbitration or error). When a message is aborted, the associated TXE (see Section 8.3.2.7, "MSCAN Transmitter Flag Register (CANTFLG)") and abort acknowledge flags (ABTAK, see Section 8.3.2.10, "MSCAN Transmitter Message Abort Acknowledge Register (CANTAAK)") are set and a transmit interrupt occurs if enabled. The CPU cannot reset ABTRQx. ABTRQx is reset whenever the associated TXE flag is set. 0 No abort request 1 Abort request pending

8.3.2.10 MSCAN Transmitter Message Abort Acknowledge Register (CANTAAK)

The CANTAAK register indicates the successful abort of a queued message, if requested by the appropriate bits in the CANTARQ register.

Module Base + 0x0009 Access: User read/write(1)

	7	6	5	4	3	2	1	0
R	0	0	0	0	0	ABTAK2	ABTAK1	ABTAK0
W								
Reset:	0	0	0	0	0	0	0	0

= Unimplemented

Figure 8-13. MSCAN Transmitter Message Abort Acknowledge Register (CANTAAK)

1. Read: Anytime
   Write: Unimplemented

NOTE

The CANTAAK register is held in the reset state when the initialization mode is active (INITRQ = 1 and INITAK = 1).

Table 8-16. CANTAAK Register Field Descriptions

Field	Description
2-0 ABTAK[2:0]	**Abort Acknowledge** — This flag acknowledges that a message was aborted due to a pending abort request from the CPU. After a particular message buffer is flagged empty, this flag can be used by the application software to identify whether the message was aborted successfully or was sent anyway. The ABTAKx flag is cleared whenever the corresponding TXE flag is cleared. 0 The message was not aborted. 1 The message was aborted.

8.3.2.11 MSCAN Transmit Buffer Selection Register (CANTBSEL)

The CANTBSEL register allows the selection of the actual transmit message buffer, which then will be accessible in the CANTXFG register space.

Module Base + 0x000A Access: User read/write(1)

	7	6	5	4	3	2	1	0
R	0	0	0	0	0	TX2	TX1	TX0
W								
Reset:	0	0	0	0	0	0	0	0

= Unimplemented

Figure 8-14. MSCAN Transmit Buffer Selection Register (CANTBSEL)

1. Read: Find the lowest ordered bit set to 1, all other bits will be read as 0
   Write: Anytime when not in initialization mode

NOTE

The CANTBSEL register is held in the reset state when the initialization mode is active (INITRQ = 1 and INITAK=1). This register is writable when not in initialization mode (INITRQ = 0 and INITAK = 0).

Table 8-17. CANTBSEL Register Field Descriptions

Field	Description
2-0 TX[2:0]	**Transmit Buffer Select** — The lowest numbered bit places the respective transmit buffer in the CANTXFG register space (e.g., TX1 = 1 and TX0 = 1 selects transmit buffer TX0; TX1 = 1 and TX0 = 0 selects transmit buffer TX1). Read and write accesses to the selected transmit buffer will be blocked, if the corresponding TXEx bit is cleared and the buffer is scheduled for transmission (see Section 8.3.2.7, "MSCAN Transmitter Flag Register (CANTFLG)"). 0 The associated message buffer is deselected 1 The associated message buffer is selected, if lowest numbered bit

The following gives a short programming example of the usage of the CANTBSEL register:

To get the next available transmit buffer, application software must read the CANTFLG register and write this value back into the CANTBSEL register. In this example Tx buffers TX1 and TX2 are available. The value read from CANTFLG is therefore 0b0000_0110. When writing this value back to CANTBSEL, the Tx buffer TX1 is selected in the CANTXFG because the lowest numbered bit set to 1 is at bit position 1. Reading back this value out of CANTBSEL results in 0b0000_0010, because only the lowest numbered bit position set to 1 is presented. This mechanism eases the application software the selection of the next available Tx buffer.

- LDAA CANTFLG; value read is 0b0000_0110
- STAA CANTBSEL; value written is 0b0000_0110
- LDAA CANTBSEL; value read is 0b0000_0010

If all transmit message buffers are deselected, no accesses are allowed to the CANTXFG registers.

8.3.2.12 MSCAN Identifier Acceptance Control Register (CANIDAC)

The CANIDAC register is used for identifier acceptance control as described below.

Module Base + 0x000B — Access: User read/write(1)

	7	6	5	4	3	2	1	0
R	0	0	IDAM1	IDAM0	0	IDHIT2	IDHIT1	IDHIT0
W								
Reset:	0	0	0	0	0	0	0	0

= Unimplemented

Figure 8-15. MSCAN Identifier Acceptance Control Register (CANIDAC)

1. Read: Anytime
   Write: Anytime in initialization mode (INITRQ = 1 and INITAK = 1), except bits IDHITx, which are read-only

Table 8-18. CANIDAC Register Field Descriptions

Field	Description
5-4 IDAM[1:0]	**Identifier Acceptance Mode** — The CPU sets these flags to define the identifier acceptance filter organization (see Section 8.4.3, "Identifier Acceptance Filter"). Table 8-19 summarizes the different settings. In filter closed mode, no message is accepted such that the foreground buffer is never reloaded.
2-0 IDHIT[2:0]	Identifier Acceptance Hit Indicator — The MSCAN sets these flags to indicate an identifier acceptance hit (see Section 8.4.3, "Identifier Acceptance Filter"). Table 8-20 summarizes the different settings.

Table 8-19. Identifier Acceptance Mode Settings

IDAM1	IDAM0	Identifier Acceptance Mode
0	0	Two 32-bit acceptance filters
0	1	Four 16-bit acceptance filters
1	0	Eight 8-bit acceptance filters
1	1	Filter closed

Table 8-20. Identifier Acceptance Hit Indication

IDHIT2	IDHIT1	IDHIT0	Identifier Acceptance Hit
0	0	0	Filter 0 hit
0	0	1	Filter 1 hit
0	1	0	Filter 2 hit
0	1	1	Filter 3 hit
1	0	0	Filter 4 hit
1	0	1	Filter 5 hit
1	1	0	Filter 6 hit
1	1	1	Filter 7 hit

The IDHITx indicators are always related to the message in the foreground buffer (RxFG). When a message gets shifted into the foreground buffer of the receiver FIFO the indicators are updated as well.

8.3.2.13 MSCAN Reserved Register

This register is reserved for factory testing of the MSCAN module and is not available in normal system operating modes.

Module Base + 0x000C to Module Base + 0x000D — Access: User read/write(1)

	7	6	5	4	3	2	1	0
R	0	0	0	0	0	0	0	0
W								
Reset:	0	0	0	0	0	0	0	0

= Unimplemented

Figure 8-16. MSCAN Reserved Register

1. Read: Always reads zero in normal system operation modes
   Write: Unimplemented in normal system operation modes

NOTE

Writing to this register when in special systm operating modes can alter the MSCAN functionality.

8.3.2.14 MSCAN Miscellaneous Register (CANMISC)

This register provides additional features.

Module Base + 0x000D — Access: User read/write(1)

	7	6	5	4	3	2	1	0
R	0	0	0	0	0	0	0	BOHOLD
W								
Reset:	0	0	0	0	0	0	0	0

= Unimplemented

Figure 8-17. MSCAN Miscellaneous Register (CANMISC)

1. Read: Anytime
   Write: Anytime; write of '1' clears flag; write of '0' ignored

Table 8-21. CANMISC Register Field Descriptions

Field	Description
0 BOHOLD	**Bus-off State Hold Until User Request** — If BORM is set in MSCAN Control Register 1 (CANCTL1), this bit indicates whether the module has entered the bus-off state. Clearing this bit requests the recovery from bus-off. Refer to Section 8.5.2, "Bus-Off Recovery," for details. 0 Module is not bus-off or recovery has been requested by user in bus-off state 1 Module is bus-off and holds this state until user request

8.3.2.15 MSCAN Receive Error Counter (CANRXERR)

This register reflects the status of the MSCAN receive error counter.

Module Base + 0x000E — Access: User read/write(1)

	7	6	5	4	3	2	1	0
R	RXERR7	RXERR6	RXERR5	RXERR4	RXERR3	RXERR2	RXERR1	RXERR0
W								
Reset:	0	0	0	0	0	0	0	0

= Unimplemented

Figure 8-18. MSCAN Receive Error Counter (CANRXERR)

1. Read: Only when in sleep mode (SLPRQ = 1 and SLPAK = 1) or initialization mode (INITRQ = 1 and INITAK = 1)
   Write: Unimplemented

NOTE

Reading this register when in any other mode other than sleep or initialization mode may return an incorrect value. For MCUs with dual CPUs, this may result in a CPU fault condition.

Writing to this register when in special modes can alter the MSCAN functionality.

8.3.2.16 MSCAN Transmit Error Counter (CANTXERR)

This register reflects the status of the MSCAN transmit error counter.

Module Base + 0x000F — Access: User read/write(1)

	7	6	5	4	3	2	1	0
R	TXERR7	TXERR6	TXERR5	TXERR4	TXERR3	TXERR2	TXERR1	TXERR0
W								
Reset:	0	0	0	0	0	0	0	0

= Unimplemented

Figure 8-19. MSCAN Transmit Error Counter (CANTXERR)

1. Read: Only when in sleep mode (SLPRQ = 1 and SLPAK = 1) or initialization mode (INITRQ = 1 and INITAK = 1)
   Write: Unimplemented

NOTE

Reading this register when in any other mode other than sleep or initialization mode, may return an incorrect value. For MCUs with dual CPUs, this may result in a CPU fault condition.

Writing to this register when in special modes can alter the MSCAN functionality.

8.3.2.17 MSCAN Identifier Acceptance Registers (CANIDAR0-7)

On reception, each message is written into the background receive buffer. The CPU is only signalled to read the message if it passes the criteria in the identifier acceptance and identifier mask registers (accepted); otherwise, the message is overwritten by the next message (dropped).

The acceptance registers of the MSCAN are applied on the IDR0–IDR3 registers (see Section 8.3.3.1, "Identifier Registers (IDR0–IDR3)") of incoming messages in a bit by bit manner (see Section 8.4.3, "Identifier Acceptance Filter").

For extended identifiers, all four acceptance and mask registers are applied. For standard identifiers, only the first two (CANIDAR0/1, CANIDMR0/1) are applied.

Module Base + 0x0010 to Module Base + 0x0013 — Access: User read/write(1)

	7	6	5	4	3	2	1	0
R W	AC7	AC6	AC5	AC4	AC3	AC2	AC1	AC0
Reset	0	0	0	0	0	0	0	0

Figure 8-20. MSCAN Identifier Acceptance Registers (First Bank) — CANIDAR0–CANIDAR3

1. Read: Anytime
   Write: Anytime in initialization mode (INITRQ = 1 and INITAK = 1)

Table 8-22. CANIDAR0–CANIDAR3 Register Field Descriptions

Field	Description
7-0 AC[7:0]	**Acceptance Code Bits** — AC[7:0] comprise a user-defined sequence of bits with which the corresponding bits of the related identifier register (IDRn) of the receive message buffer are compared. The result of this comparison is then masked with the corresponding identifier mask register.

Module Base + 0x0018 to Module Base + 0x001B — Access: User read/write(1)

	7	6	5	4	3	2	1	0
R W	AC7	AC6	AC5	AC4	AC3	AC2	AC1	AC0
Reset	0	0	0	0	0	0	0	0

Figure 8-21. MSCAN Identifier Acceptance Registers (Second Bank) — CANIDAR4–CANIDAR7

1. Read: Anytime
   Write: Anytime in initialization mode (INITRQ = 1 and INITAK = 1)

Table 8-23. CANIDAR4–CANIDAR7 Register Field Descriptions

Field	Description
7-0 AC[7:0]	**Acceptance Code Bits** — AC[7:0] comprise a user-defined sequence of bits with which the corresponding bits of the related identifier register (IDRn) of the receive message buffer are compared. The result of this comparison is then masked with the corresponding identifier mask register.

8.3.2.18 MSCAN Identifier Mask Registers (CANIDMR0–CANIDMR7)

The identifier mask register specifies which of the corresponding bits in the identifier acceptance register are relevant for acceptance filtering. To receive standard identifiers in 32 bit filter mode, it is required to program the last three bits (AM[2:0]) in the mask registers CANIDMR1 and CANIDMR5 to "don't care." To receive standard identifiers in 16 bit filter mode, it is required to program the last three bits (AM[2:0]) in the mask registers CANIDMR1, CANIDMR3, CANIDMR5, and CANIDMR7 to "don't care."

Module Base + 0x0014 to Module Base + 0x0017 Access: User read/write(1)

	7	6	5	4	3	2	1	0
R W	AM7	AM6	AM5	AM4	AM3	AM2	AM1	AM0
Reset	0	0	0	0	0	0	0	0

Figure 8-22. MSCAN Identifier Mask Registers (First Bank) — CANIDMR0–CANIDMR3

1. Read: Anytime
   Write: Anytime in initialization mode (INITRQ = 1 and INITAK = 1)

Table 8-24. CANIDMR0–CANIDMR3 Register Field Descriptions

Field	Description
7-0 AM[7:0]	**Acceptance Mask Bits** — If a particular bit in this register is cleared, this indicates that the corresponding bit in the identifier acceptance register must be the same as its identifier bit before a match is detected. The message is accepted if all such bits match. If a bit is set, it indicates that the state of the corresponding bit in the identifier acceptance register does not affect whether or not the message is accepted. 0 Match corresponding acceptance code register and identifier bits 1 Ignore corresponding acceptance code register bit

Module Base + 0x001C to Module Base + 0x001F Access: User read/write(1)

	7	6	5	4	3	2	1	0
R W	AM7	AM6	AM5	AM4	AM3	AM2	AM1	AM0
Reset	0	0	0	0	0	0	0	0

Figure 8-23. MSCAN Identifier Mask Registers (Second Bank) — CANIDMR4–CANIDMR7

1. Read: Anytime
   Write: Anytime in initialization mode (INITRQ = 1 and INITAK = 1)

Table 8-25. CANIDMR4–CANIDMR7 Register Field Descriptions

Field	Description
7-0 AM[7:0]	**Acceptance Mask Bits** — If a particular bit in this register is cleared, this indicates that the corresponding bit in the identifier acceptance register must be the same as its identifier bit before a match is detected. The message is accepted if all such bits match. If a bit is set, it indicates that the state of the corresponding bit in the identifier acceptance register does not affect whether or not the message is accepted. 0 Match corresponding acceptance code register and identifier bits 1 Ignore corresponding acceptance code register bit

8.3.3 Programmer's Model of Message Storage

The following section details the organization of the receive and transmit message buffers and the associated control registers.

To simplify the programmer interface, the receive and transmit message buffers have the same outline. Each message buffer allocates 16 bytes in the memory map containing a 13 byte data structure.

An additional transmit buffer priority register (TBPR) is defined for the transmit buffers. Within the last two bytes of this memory map, the MSCAN stores a special 16-bit time stamp, which is sampled from an internal timer after successful transmission or reception of a message. This feature is only available for transmit and receiver buffers, if the TIME bit is set (see Section 8.3.2.1, "MSCAN Control Register 0 (CANCTL0)").

The time stamp register is written by the MSCAN. The CPU can only read these registers.

Table 8-26. Message Buffer Organization

Offset Address	Register	Access
0x00X0	Identifier Register 0	R/W
0x00X1	Identifier Register 1	R/W
0x00X2	Identifier Register 2	R/W
0x00X3	Identifier Register 3	R/W
0x00X4	Data Segment Register 0	R/W
0x00X5	Data Segment Register 1	R/W
0x00X6	Data Segment Register 2	R/W
0x00X7	Data Segment Register 3	R/W
0x00X8	Data Segment Register 4	R/W
0x00X9	Data Segment Register 5	R/W
0x00XA	Data Segment Register 6	R/W
0x00XB	Data Segment Register 7	R/W
0x00XC	Data Length Register	R/W
0x00XD	Transmit Buffer Priority Register(1)	R/W
0x00XE	Time Stamp Register (High Byte)	R
0x00XF	Time Stamp Register (Low Byte)	R

1. Not applicable for receive buffers

Figure 8-24 shows the common 13-byte data structure of receive and transmit buffers for extended identifiers. The mapping of standard identifiers into the IDR registers is shown in Figure 8-25.

All bits of the receive and transmit buffers are 'x' out of reset because of RAM-based implementation[1]. All reserved or unused bits of the receive and transmit buffers always read 'x'.

Figure 8-24. Receive/Transmit Message Buffer — Extended Identifier Mapping

Register Name		Bit 7	6	5	4	3	2	1	Bit0
0x00X0 IDR0	R W	ID28	ID27	ID26	ID25	ID24	ID23	ID22	ID21
0x00X1 IDR1	R W	ID20	ID19	ID18	SRR (=1)	IDE (=1)	ID17	ID16	ID15
0x00X2 IDR2	R W	ID14	ID13	ID12	ID11	ID10	ID9	ID8	ID7
0x00X3 IDR3	R W	ID6	ID5	ID4	ID3	ID2	ID1	ID0	RTR

1. Exception: The transmit buffer priority registers are 0 out of reset.

Figure 8-24. Receive/Transmit Message Buffer — Extended Identifier Mapping (continued)

Register Name		Bit 7	6	5	4	3	2	1	Bit0
0x00X4 DSR0	R	DB7	DB6	DB5	DB4	DB3	DB2	DB1	DB0
	W								
0x00X5 DSR1	R	DB7	DB6	DB5	DB4	DB3	DB2	DB1	DB0
	W								
0x00X6 DSR2	R	DB7	DB6	DB5	DB4	DB3	DB2	DB1	DB0
	W								
0x00X7 DSR3	R	DB7	DB6	DB5	DB4	DB3	DB2	DB1	DB0
	W								
0x00X8 DSR4	R	DB7	DB6	DB5	DB4	DB3	DB2	DB1	DB0
	W								
0x00X9 DSR5	R	DB7	DB6	DB5	DB4	DB3	DB2	DB1	DB0
	W								
0x00XA DSR6	R	DB7	DB6	DB5	DB4	DB3	DB2	DB1	DB0
	W								
0x00XB DSR7	R	DB7	DB6	DB5	DB4	DB3	DB2	DB1	DB0
	W								
0x00XC DLR	R					DLC3	DLC2	DLC1	DLC0
	W								

= Unused, always read 'x'

Read:

- For transmit buffers, anytime when TXEx flag is set (see Section 8.3.2.7, "MSCAN Transmitter Flag Register (CANTFLG)") and the corresponding transmit buffer is selected in CANTBSEL (see Section 8.3.2.11, "MSCAN Transmit Buffer Selection Register (CANTBSEL)").
- For receive buffers, only when RXF flag is set (see Section 8.3.2.5, "MSCAN Receiver Flag Register (CANRFLG)").

Write:

- For transmit buffers, anytime when TXEx flag is set (see Section 8.3.2.7, "MSCAN Transmitter Flag Register (CANTFLG)") and the corresponding transmit buffer is selected in CANTBSEL (see Section 8.3.2.11, "MSCAN Transmit Buffer Selection Register (CANTBSEL)").
- Unimplemented for receive buffers.

Reset: Undefined because of RAM-based implementation

Figure 8-25. Receive/Transmit Message Buffer — Standard Identifier Mapping

Register Name		Bit 7	6	5	4	3	2	1	Bit 0
IDR0 0x00X0	R	ID10	ID9	ID8	ID7	ID6	ID5	ID4	ID3
	W								
IDR1 0x00X1	R	ID2	ID1	ID0	RTR	IDE (=0)			
	W								
IDR2 0x00X2	R								
	W								
IDR3 0x00X3	R								
	W								

= Unused, always read 'x'

8.3.3.1 Identifier Registers (IDR0–IDR3)

The identifier registers for an extended format identifier consist of a total of 32 bits; ID[28:0], SRR, IDE, and RTR bits. The identifier registers for a standard format identifier consist of a total of 13 bits; ID[10:0], RTR, and IDE bits.

8.3.3.1.1 IDR0–IDR3 for Extended Identifier Mapping

Module Base + 0x00X0

	7	6	5	4	3	2	1	0
R W	ID28	ID27	ID26	ID25	ID24	ID23	ID22	ID21
Reset:	x	x	x	x	x	x	x	x

Figure 8-26. Identifier Register 0 (IDR0) — Extended Identifier Mapping

Table 8-27. IDR0 Register Field Descriptions — Extended

Field	Description
7-0 ID[28:21]	**Extended Format Identifier** — The identifiers consist of 29 bits (ID[28:0]) for the extended format. ID28 is the most significant bit and is transmitted first on the CAN bus during the arbitration procedure. The priority of an identifier is defined to be highest for the smallest binary number.

Module Base + 0x00X1

	7	6	5	4	3	2	1	0
R W	ID20	ID19	ID18	SRR (=1)	IDE (=1)	ID17	ID16	ID15
Reset:	x	x	x	x	x	x	x	x

Figure 8-27. Identifier Register 1 (IDR1) — Extended Identifier Mapping

Table 8-28. IDR1 Register Field Descriptions — Extended

Field	Description
7-5 ID[20:18]	**Extended Format Identifier —** The identifiers consist of 29 bits (ID[28:0]) for the extended format. ID28 is the most significant bit and is transmitted first on the CAN bus during the arbitration procedure. The priority of an identifier is defined to be highest for the smallest binary number.
4 SRR	**Substitute Remote Request** — This fixed recessive bit is used only in extended format. It must be set to 1 by the user for transmission buffers and is stored as received on the CAN bus for receive buffers.
3 IDE	**ID Extended** — This flag indicates whether the extended or standard identifier format is applied in this buffer. In the case of a receive buffer, the flag is set as received and indicates to the CPU how to process the buffer identifier registers. In the case of a transmit buffer, the flag indicates to the MSCAN what type of identifier to send. 0 Standard format (11 bit) 1 Extended format (29 bit)
2-0 ID[17:15]	**Extended Format Identifier —** The identifiers consist of 29 bits (ID[28:0]) for the extended format. ID28 is the most significant bit and is transmitted first on the CAN bus during the arbitration procedure. The priority of an identifier is defined to be highest for the smallest binary number.

Module Base + 0x00X2

	7	6	5	4	3	2	1	0
R W	ID14	ID13	ID12	ID11	ID10	ID9	ID8	ID7
Reset:	x	x	x	x	x	x	x	x

Figure 8-28. Identifier Register 2 (IDR2) — Extended Identifier Mapping

Table 8-29. IDR2 Register Field Descriptions — Extended

Field	Description
7-0 ID[14:7]	**Extended Format Identifier —** The identifiers consist of 29 bits (ID[28:0]) for the extended format. ID28 is the most significant bit and is transmitted first on the CAN bus during the arbitration procedure. The priority of an identifier is defined to be highest for the smallest binary number.

Module Base + 0x00X3

	7	6	5	4	3	2	1	0
R W	ID6	ID5	ID4	ID3	ID2	ID1	ID0	RTR
Reset:	x	x	x	x	x	x	x	x

Figure 8-29. Identifier Register 3 (IDR3) — Extended Identifier Mapping

Table 8-30. IDR3 Register Field Descriptions — Extended

Field	Description
7-1 ID[6:0]	**Extended Format Identifier —** The identifiers consist of 29 bits (ID[28:0]) for the extended format. ID28 is the most significant bit and is transmitted first on the CAN bus during the arbitration procedure. The priority of an identifier is defined to be highest for the smallest binary number.
0 RTR	**Remote Transmission Request** — This flag reflects the status of the remote transmission request bit in the CAN frame. In the case of a receive buffer, it indicates the status of the received frame and supports the transmission of an answering frame in software. In the case of a transmit buffer, this flag defines the setting of the RTR bit to be sent. 0 Data frame 1 Remote frame

8.3.3.1.2 IDR0–IDR3 for Standard Identifier Mapping

Module Base + 0x00X0

	7	6	5	4	3	2	1	0
R W	ID10	ID9	ID8	ID7	ID6	ID5	ID4	ID3
Reset:	x	x	x	x	x	x	x	x

Figure 8-30. Identifier Register 0 — Standard Mapping

Table 8-31. IDR0 Register Field Descriptions — Standard

Field	Description
7-0 ID[10:3]	**Standard Format Identifier —** The identifiers consist of 11 bits (ID[10:0]) for the standard format. ID10 is the most significant bit and is transmitted first on the CAN bus during the arbitration procedure. The priority of an identifier is defined to be highest for the smallest binary number. See also ID bits in Table 8-32.

Module Base + 0x00X1

	7	6	5	4	3	2	1	0
R W	ID2	ID1	ID0	RTR	IDE (=0)			
Reset:	x	x	x	x	x	x	x	x

= Unused; always read 'x'

Figure 8-31. Identifier Register 1 — Standard Mapping

Table 8-32. IDR1 Register Field Descriptions

Field	Description
7-5 ID[2:0]	**Standard Format Identifier —** The identifiers consist of 11 bits (ID[10:0]) for the standard format. ID10 is the most significant bit and is transmitted first on the CAN bus during the arbitration procedure. The priority of an identifier is defined to be highest for the smallest binary number. See also ID bits in Table 8-31.
4 RTR	**Remote Transmission Request** — This flag reflects the status of the Remote Transmission Request bit in the CAN frame. In the case of a receive buffer, it indicates the status of the received frame and supports the transmission of an answering frame in software. In the case of a transmit buffer, this flag defines the setting of the RTR bit to be sent. 0 Data frame 1 Remote frame
3 IDE	**ID Extended** — This flag indicates whether the extended or standard identifier format is applied in this buffer. In the case of a receive buffer, the flag is set as received and indicates to the CPU how to process the buffer identifier registers. In the case of a transmit buffer, the flag indicates to the MSCAN what type of identifier to send. 0 Standard format (11 bit) 1 Extended format (29 bit)

Module Base + 0x00X2

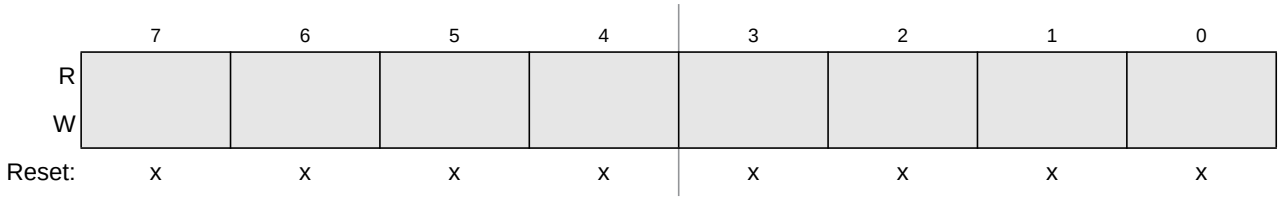

Figure 8-32. Identifier Register 2 — Standard Mapping

Module Base + 0x00X3

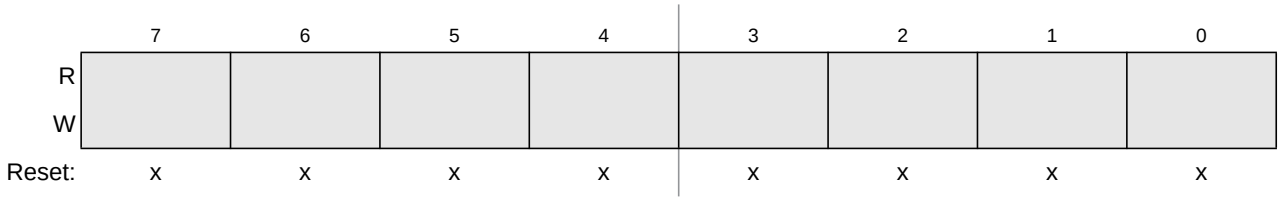

Figure 8-33. Identifier Register 3 — Standard Mapping

8.3.3.2 Data Segment Registers (DSR0-7)

The eight data segment registers, each with bits DB[7:0], contain the data to be transmitted or received. The number of bytes to be transmitted or received is determined by the data length code in the corresponding DLR register.

Module Base + 0x00X4 to Module Base + 0x00XB

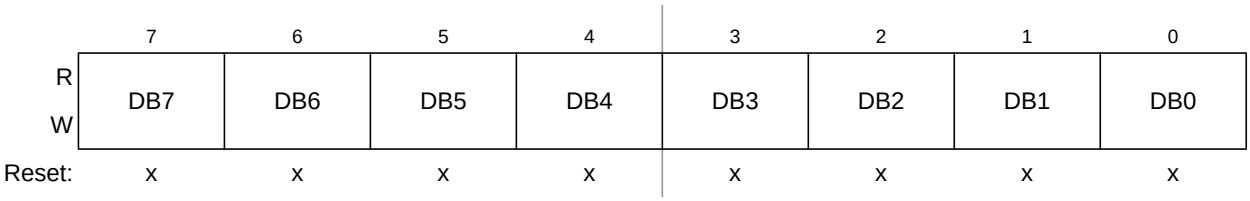

Figure 8-34. Data Segment Registers (DSR0–DSR7) — Extended Identifier Mapping

Table 8-33. DSR0–DSR7 Register Field Descriptions

Field	Description
7-0 DB[7:0]	**Data bits 7-0**

8.3.3.3 Data Length Register (DLR)

This register keeps the data length field of the CAN frame.

Module Base + 0x00XC

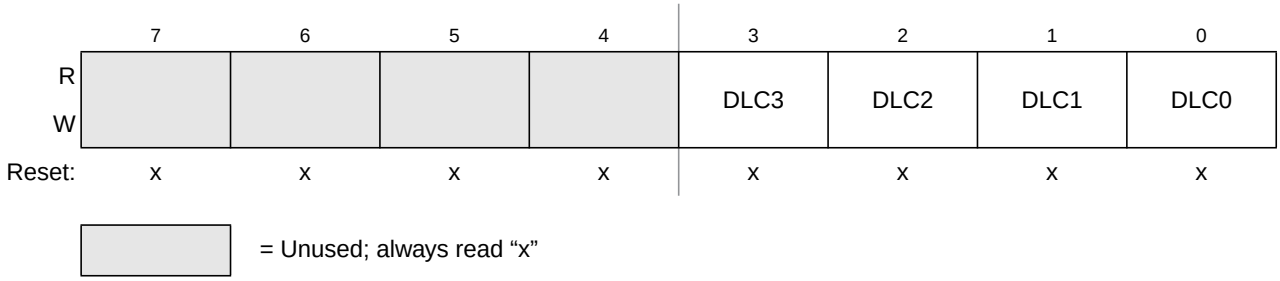

Figure 8-35. Data Length Register (DLR) — Extended Identifier Mapping

Table 8-34. DLR Register Field Descriptions

Field	Description
3-0 DLC[3:0]	**Data Length Code Bits** — The data length code contains the number of bytes (data byte count) of the respective message. During the transmission of a remote frame, the data length code is transmitted as programmed while the number of transmitted data bytes is always 0. The data byte count ranges from 0 to 8 for a data frame. Table 8-35 shows the effect of setting the DLC bits.

Table 8-35. Data Length Codes

Data Length Code				Data Byte Count
DLC3	DLC2	DLC1	DLC0	
0	0	0	0	0
0	0	0	1	1
0	0	1	0	2
0	0	1	1	3
0	1	0	0	4
0	1	0	1	5
0	1	1	0	6
0	1	1	1	7
1	0	0	0	8

8.3.3.4 Transmit Buffer Priority Register (TBPR)

This register defines the local priority of the associated message buffer. The local priority is used for the internal prioritization process of the MSCAN and is defined to be highest for the smallest binary number. The MSCAN implements the following internal prioritization mechanisms:

- All transmission buffers with a cleared TXEx flag participate in the prioritization immediately before the SOF (start of frame) is sent.
- The transmission buffer with the lowest local priority field wins the prioritization.

In cases of more than one buffer having the same lowest priority, the message buffer with the lower index number wins.

Module Base + 0x00XD — Access: User read/write(1)

	7	6	5	4	3	2	1	0
R W	PRIO7	PRIO6	PRIO5	PRIO4	PRIO3	PRIO2	PRIO1	PRIO0
Reset:	0	0	0	0	0	0	0	0

Figure 8-36. Transmit Buffer Priority Register (TBPR)

1. Read: Anytime when TXEx flag is set (see Section 8.3.2.7, "MSCAN Transmitter Flag Register (CANTFLG)") and the corresponding transmit buffer is selected in CANTBSEL (see Section 8.3.2.11, "MSCAN Transmit Buffer Selection Register (CANTBSEL)")
   Write: Anytime when TXEx flag is set (see Section 8.3.2.7, "MSCAN Transmitter Flag Register (CANTFLG)") and the corresponding transmit buffer is selected in CANTBSEL (see Section 8.3.2.11, "MSCAN Transmit Buffer Selection Register (CANTBSEL)")

8.3.3.5 Time Stamp Register (TSRH–TSRL)

If the TIME bit is enabled, the MSCAN will write a time stamp to the respective registers in the active transmit or receive buffer right after the EOF of a valid message on the CAN bus (see Section 8.3.2.1, "MSCAN Control Register 0 (CANCTL0)"). In case of a transmission, the CPU can only read the time stamp after the respective transmit buffer has been flagged empty.

The timer value, which is used for stamping, is taken from a free running internal CAN bit clock. A timer overrun is not indicated by the MSCAN. The timer is reset (all bits set to 0) during initialization mode. The CPU can only read the time stamp registers.

Module Base + 0x00XE — Access: User read/write(1)

	7	6	5	4	3	2	1	0
R	TSR15	TSR14	TSR13	TSR12	TSR11	TSR10	TSR9	TSR8
W								
Reset:	x	x	x	x	x	x	x	x

Figure 8-37. Time Stamp Register — High Byte (TSRH)

1. Read: Anytime when TXEx flag is set (see Section 8.3.2.7, "MSCAN Transmitter Flag Register (CANTFLG)") and the corresponding transmit buffer is selected in CANTBSEL (see Section 8.3.2.11, "MSCAN Transmit Buffer Selection Register (CANTBSEL)")
   Write: Unimplemented

Module Base + 0x00XF — Access: User read/write(1)

	7	6	5	4	3	2	1	0
R	TSR7	TSR6	TSR5	TSR4	TSR3	TSR2	TSR1	TSR0
W								
Reset:	x	x	x	x	x	x	x	x

Figure 8-38. Time Stamp Register — Low Byte (TSRL)

1. Read: Anytime when TXEx flag is set (see Section 8.3.2.7, "MSCAN Transmitter Flag Register (CANTFLG)") and the corresponding transmit buffer is selected in CANTBSEL (see Section 8.3.2.11, "MSCAN Transmit Buffer Selection Register (CANTBSEL)")
   Write: Unimplemented

8.4 Functional Description

8.4.1 General

This section provides a complete functional description of the MSCAN.

8.4.2 Message Storage

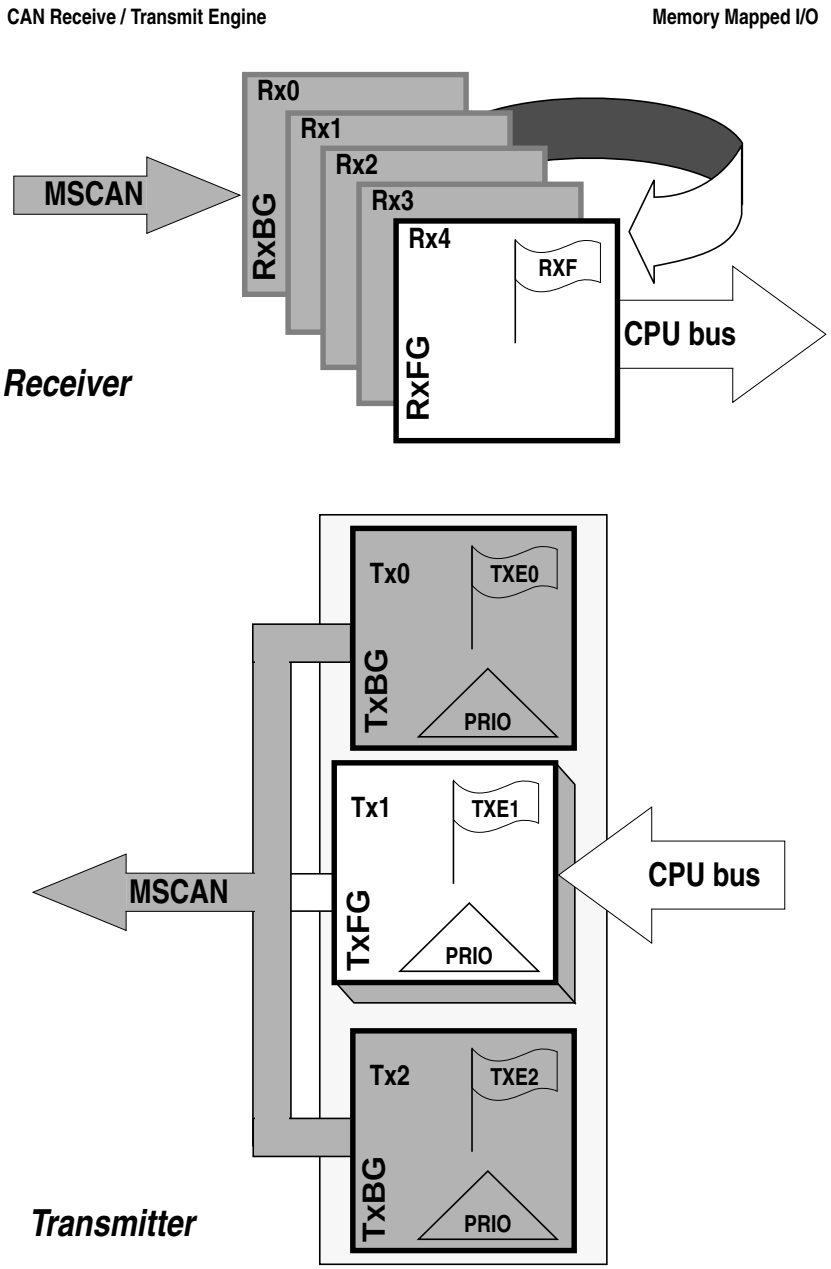

Figure 8-39. User Model for Message Buffer Organization

The MSCAN facilitates a sophisticated message storage system which addresses the requirements of a broad range of network applications.

8.4.2.1 Message Transmit Background

Modern application layer software is built upon two fundamental assumptions:

- Any CAN node is able to send out a stream of scheduled messages without releasing the CAN bus between the two messages. Such nodes arbitrate for the CAN bus immediately after sending the previous message and only release the CAN bus in case of lost arbitration.
- The internal message queue within any CAN node is organized such that the highest priority message is sent out first, if more than one message is ready to be sent.

The behavior described in the bullets above cannot be achieved with a single transmit buffer. That buffer must be reloaded immediately after the previous message is sent. This loading process lasts a finite amount of time and must be completed within the inter-frame sequence (IFS) to be able to send an uninterrupted stream of messages. Even if this is feasible for limited CAN bus speeds, it requires that the CPU reacts with short latencies to the transmit interrupt.

A double buffer scheme de-couples the reloading of the transmit buffer from the actual message sending and, therefore, reduces the reactiveness requirements of the CPU. Problems can arise if the sending of a message is finished while the CPU re-loads the second buffer. No buffer would then be ready for transmission, and the CAN bus would be released.

At least three transmit buffers are required to meet the first of the above requirements under all circumstances. The MSCAN has three transmit buffers.

The second requirement calls for some sort of internal prioritization which the MSCAN implements with the "local priority" concept described in Section 8.4.2.2, "Transmit Structures."

8.4.2.2 Transmit Structures

The MSCAN triple transmit buffer scheme optimizes real-time performance by allowing multiple messages to be set up in advance. The three buffers are arranged as shown in Figure 8-39.

All three buffers have a 13-byte data structure similar to the outline of the receive buffers (see Section 8.3.3, "Programmer's Model of Message Storage"). An additional Transmit Buffer Priority Register (TBPR) contains an 8-bit local priority field (PRIO) (see Section 8.3.3.4, "Transmit Buffer Priority Register (TBPR)"). The remaining two bytes are used for time stamping of a message, if required (see Section 8.3.3.5, "Time Stamp Register (TSRH–TSRL)").

To transmit a message, the CPU must identify an available transmit buffer, which is indicated by a set transmitter buffer empty (TXEx) flag (see Section 8.3.2.7, "MSCAN Transmitter Flag Register (CANTFLG)"). If a transmit buffer is available, the CPU must set a pointer to this buffer by writing to the CANTBSEL register (see Section 8.3.2.11, "MSCAN Transmit Buffer Selection Register (CANTBSEL)"). This makes the respective buffer accessible within the CANTXFG address space (see Section 8.3.3, "Programmer's Model of Message Storage"). The algorithmic feature associated with the CANTBSEL register simplifies the transmit buffer selection. In addition, this scheme makes the handler software simpler because only one address area is applicable for the transmit process, and the required address space is minimized.

The CPU then stores the identifier, the control bits, and the data content into one of the transmit buffers. Finally, the buffer is flagged as ready for transmission by clearing the associated TXE flag.

The MSCAN then schedules the message for transmission and signals the successful transmission of the buffer by setting the associated TXE flag. A transmit interrupt (see Section 8.4.7.2, "Transmit Interrupt") is generated[1] when TXEx is set and can be used to drive the application software to re-load the buffer.

If more than one buffer is scheduled for transmission when the CAN bus becomes available for arbitration, the MSCAN uses the local priority setting of the three buffers to determine the prioritization. For this purpose, every transmit buffer has an 8-bit local priority field (PRIO). The application software programs this field when the message is set up. The local priority reflects the priority of this particular message relative to the set of messages being transmitted from this node. The lowest binary value of the PRIO field is defined to be the highest priority. The internal scheduling process takes place whenever the MSCAN arbitrates for the CAN bus. This is also the case after the occurrence of a transmission error.

When a high priority message is scheduled by the application software, it may become necessary to abort a lower priority message in one of the three transmit buffers. Because messages that are already in transmission cannot be aborted, the user must request the abort by setting the corresponding abort request bit (ABTRQ) (see Section 8.3.2.9, "MSCAN Transmitter Message Abort Request Register (CANTARQ)".) The MSCAN then grants the request, if possible, by:

1. Setting the corresponding abort acknowledge flag (ABTAK) in the CANTAAK register.
2. Setting the associated TXE flag to release the buffer.
3. Generating a transmit interrupt. The transmit interrupt handler software can determine from the setting of the ABTAK flag whether the message was aborted (ABTAK = 1) or sent (ABTAK = 0).

8.4.2.3 Receive Structures

The received messages are stored in a five stage input FIFO. The five message buffers are alternately mapped into a single memory area (see Figure 8-39). The background receive buffer (RxBG) is exclusively associated with the MSCAN, but the foreground receive buffer (RxFG) is addressable by the CPU (see Figure 8-39). This scheme simplifies the handler software because only one address area is applicable for the receive process.

All receive buffers have a size of 15 bytes to store the CAN control bits, the identifier (standard or extended), the data contents, and a time stamp, if enabled (see Section 8.3.3, "Programmer's Model of Message Storage").

The receiver full flag (RXF) (see Section 8.3.2.5, "MSCAN Receiver Flag Register (CANRFLG)") signals the status of the foreground receive buffer. When the buffer contains a correctly received message with a matching identifier, this flag is set.

On reception, each message is checked to see whether it passes the filter (see Section 8.4.3, "Identifier Acceptance Filter") and simultaneously is written into the active RxBG. After successful reception of a valid message, the MSCAN shifts the content of RxBG into the receiver FIFO[2], sets the RXF flag, and generates a receive interrupt (see Section 8.4.7.3, "Receive Interrupt") to the CPU[3]. The user's receive handler must read the received message from the RxFG and then reset the RXF flag to acknowledge the interrupt and to release the foreground buffer. A new message, which can follow immediately after the IFS field of the CAN frame, is received into the next available RxBG. If the MSCAN receives an invalid

1. The transmit interrupt occurs only if not masked. A polling scheme can be applied on TXEx also.
2. Only if the RXF flag is not set.
3. The receive interrupt occurs only if not masked. A polling scheme can be applied on RXF also.

message in its RxBG (wrong identifier, transmission errors, etc.) the actual contents of the buffer will be over-written by the next message. The buffer will then not be shifted into the FIFO.

When the MSCAN module is transmitting, the MSCAN receives its own transmitted messages into the background receive buffer, RxBG, but does not shift it into the receiver FIFO, generate a receive interrupt, or acknowledge its own messages on the CAN bus. The exception to this rule is in loopback mode (see Section 8.3.2.2, "MSCAN Control Register 1 (CANCTL1)") where the MSCAN treats its own messages exactly like all other incoming messages. The MSCAN receives its own transmitted messages in the event that it loses arbitration. If arbitration is lost, the MSCAN must be prepared to become a receiver.

An overrun condition occurs when all receive message buffers in the FIFO are filled with correctly received messages with accepted identifiers and another message is correctly received from the CAN bus with an accepted identifier. The latter message is discarded and an error interrupt with overrun indication is generated if enabled (see Section 8.4.7.5, "Error Interrupt"). The MSCAN remains able to transmit messages while the receiver FIFO being filled, but all incoming messages are discarded. As soon as a receive buffer in the FIFO is available again, new valid messages will be accepted.

8.4.3 Identifier Acceptance Filter

The MSCAN identifier acceptance registers (see Section 8.3.2.12, "MSCAN Identifier Acceptance Control Register (CANIDAC)") define the acceptable patterns of the standard or extended identifier (ID[10:0] or ID[28:0]). Any of these bits can be marked 'don't care' in the MSCAN identifier mask registers (see Section 8.3.2.18, "MSCAN Identifier Mask Registers (CANIDMR0–CANIDMR7)").

A filter hit is indicated to the application software by a set receive buffer full flag (RXF = 1) and three bits in the CANIDAC register (see Section 8.3.2.12, "MSCAN Identifier Acceptance Control Register (CANIDAC)"). These identifier hit flags (IDHIT[2:0]) clearly identify the filter section that caused the acceptance. They simplify the application software's task to identify the cause of the receiver interrupt. If more than one hit occurs (two or more filters match), the lower hit has priority.

A very flexible programmable generic identifier acceptance filter has been introduced to reduce the CPU interrupt loading. The filter is programmable to operate in four different modes (see Bosch CAN 2.0A/B protocol specification):

- Two identifier acceptance filters, each to be applied to:
  - The full 29 bits of the extended identifier and to the following bits of the CAN 2.0B frame:
    - Remote transmission request (RTR)
    - Identifier extension (IDE)
    - Substitute remote request (SRR)
  - The 11 bits of the standard identifier plus the RTR and IDE bits of the CAN 2.0A/B messages[1]. This mode implements two filters for a full length CAN 2.0B compliant extended identifier. Figure 8-40 shows how the first 32-bit filter bank (CANIDAR0–CANIDAR3, CANIDMR0–CANIDMR3) produces a filter 0 hit. Similarly, the second filter bank (CANIDAR4–CANIDAR7, CANIDMR4–CANIDMR7) produces a filter 1 hit.
- Four identifier acceptance filters, each to be applied to

1. Although this mode can be used for standard identifiers, it is recommended to use the four or eight identifier acceptance filters for standard identifiers

— a) the 14 most significant bits of the extended identifier plus the SRR and IDE bits of CAN 2.0B messages or

— b) the 11 bits of the standard identifier, the RTR and IDE bits of CAN 2.0A/B messages. Figure 8-41 shows how the first 32-bit filter bank (CANIDAR0–CANIDA3, CANIDMR0–3CANIDMR) produces filter 0 and 1 hits. Similarly, the second filter bank (CANIDAR4–CANIDAR7, CANIDMR4–CANIDMR7) produces filter 2 and 3 hits.

- Eight identifier acceptance filters, each to be applied to the first 8 bits of the identifier. This mode implements eight independent filters for the first 8 bits of a CAN 2.0A/B compliant standard identifier or a CAN 2.0B compliant extended identifier. Figure 8-42 shows how the first 32-bit filter bank (CANIDAR0–CANIDAR3, CANIDMR0–CANIDMR3) produces filter 0 to 3 hits. Similarly, the second filter bank (CANIDAR4–CANIDAR7, CANIDMR4–CANIDMR7) produces filter 4 to 7 hits.
- Closed filter. No CAN message is copied into the foreground buffer RxFG, and the RXF flag is never set.

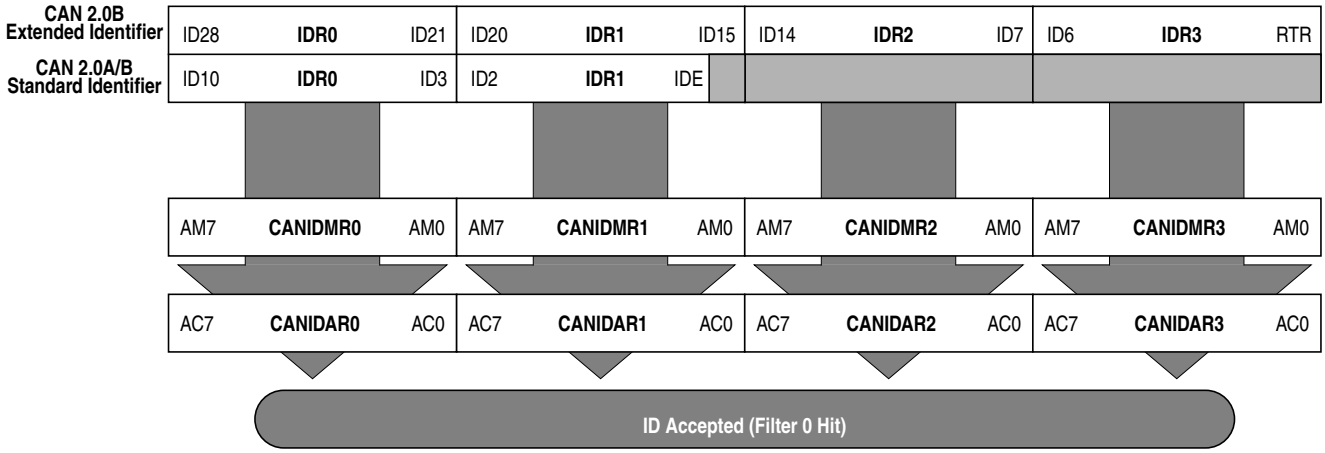

Figure 8-40. 32-bit Maskable Identifier Acceptance Filter

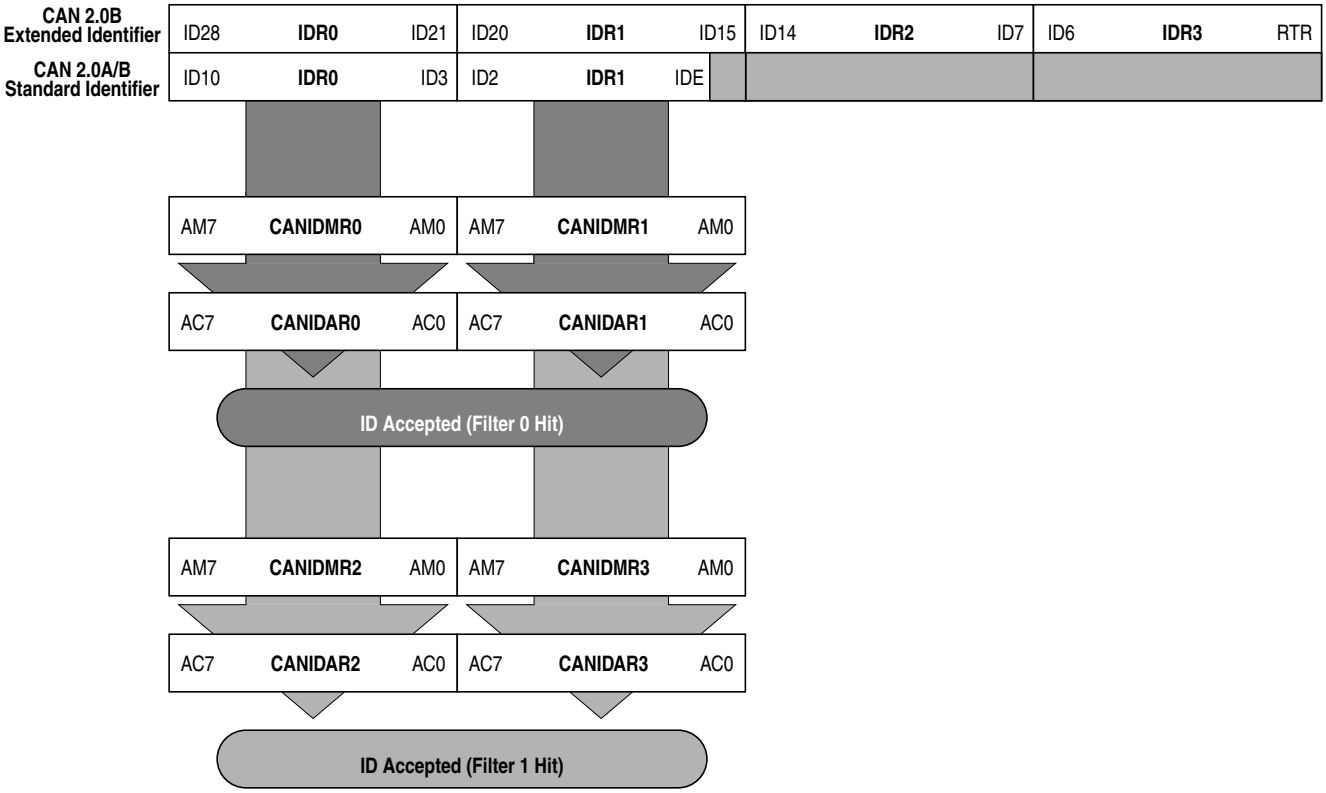

Figure 8-41. 16-bit Maskable Identifier Acceptance Filters

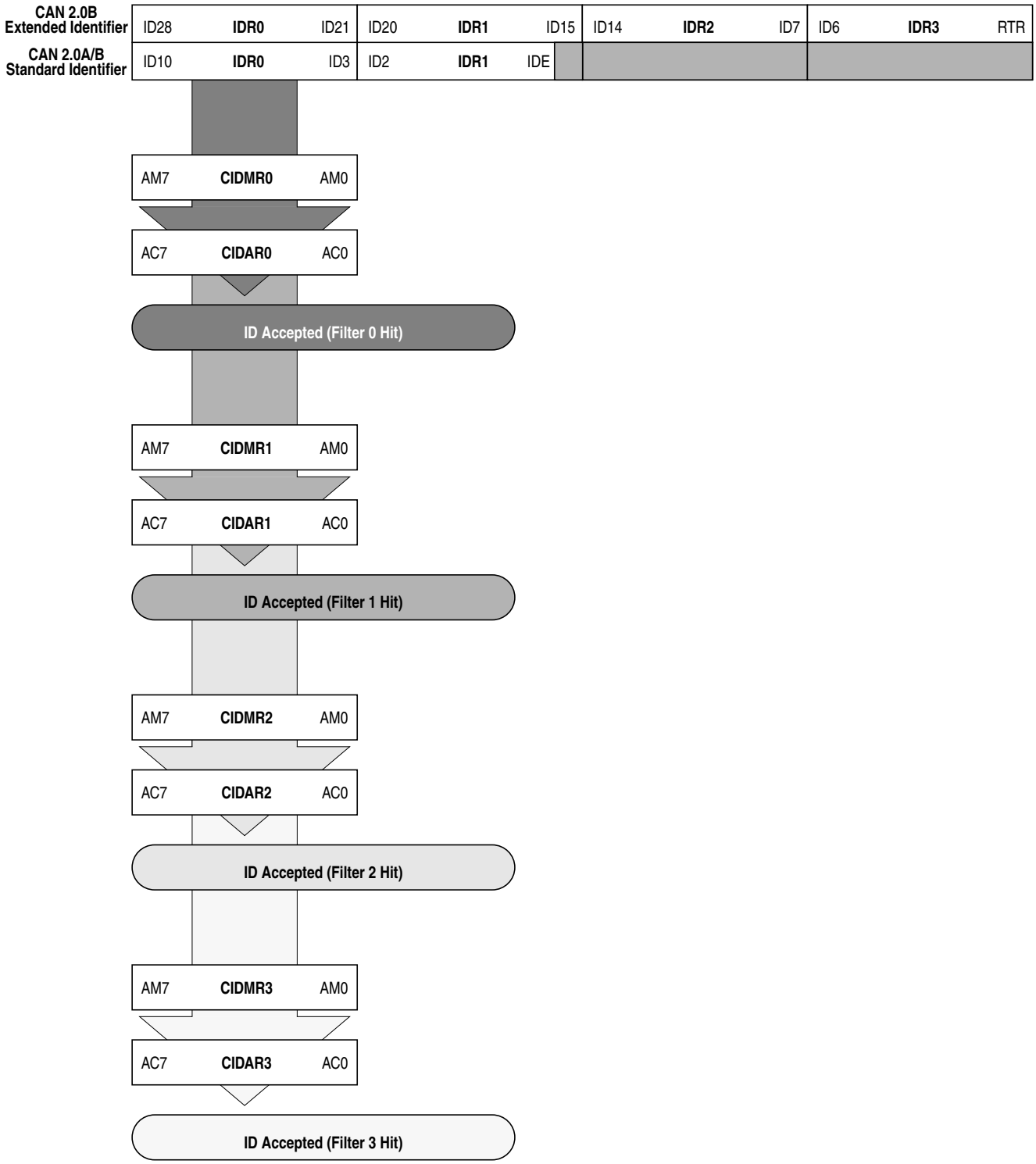

Figure 8-42. 8-bit Maskable Identifier Acceptance Filters

8.4.3.1 Protocol Violation Protection

The MSCAN protects the user from accidentally violating the CAN protocol through programming errors. The protection logic implements the following features:

- The receive and transmit error counters cannot be written or otherwise manipulated.
- All registers which control the configuration of the MSCAN cannot be modified while the MSCAN is on-line. The MSCAN has to be in Initialization Mode. The corresponding INITRQ/INITAK handshake bits in the CANCTL0/CANCTL1 registers (see Section 8.3.2.1, "MSCAN Control Register 0 (CANCTL0)") serve as a lock to protect the following registers:
  - MSCAN control 1 register (CANCTL1)
  - MSCAN bus timing registers 0 and 1 (CANBTR0, CANBTR1)
  - MSCAN identifier acceptance control register (CANIDAC)
  - MSCAN identifier acceptance registers (CANIDAR0–CANIDAR7)
  - MSCAN identifier mask registers (CANIDMR0–CANIDMR7)
- The TXCAN is immediately forced to a recessive state when the MSCAN goes into the power down mode or initialization mode (see Section 8.4.5.6, "MSCAN Power Down Mode," and Section 8.4.4.5, "MSCAN Initialization Mode").
- The MSCAN enable bit (CANE) is writable only once in normal system operation modes, which provides further protection against inadvertently disabling the MSCAN.

8.4.3.2 Clock System

Figure 8-43 shows the structure of the MSCAN clock generation circuitry.

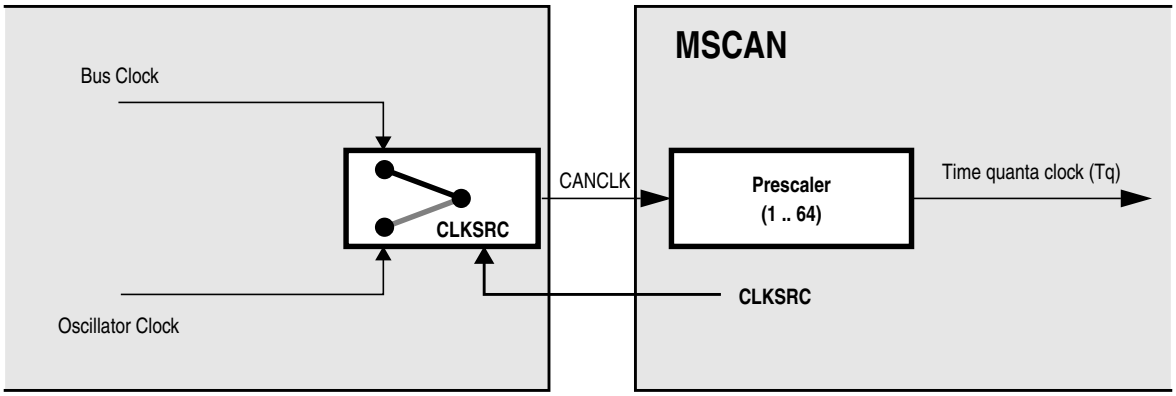

Figure 8-43. MSCAN Clocking Scheme

The clock source bit (CLKSRC) in the CANCTL1 register (8.3.2.2/8-259) defines whether the internal CANCLK is connected to the output of a crystal oscillator (oscillator clock) or to the bus clock.

The clock source has to be chosen such that the tight oscillator tolerance requirements (up to 0.4%) of the CAN protocol are met. Additionally, for high CAN bus rates (1 Mbps), a 45% to 55% duty cycle of the clock is required.

If the bus clock is generated from a PLL, it is recommended to select the oscillator clock rather than the bus clock due to jitter considerations, especially at the faster CAN bus rates.

For microcontrollers without a clock and reset generator (CRG), CANCLK is driven from the crystal oscillator (oscillator clock).

A programmable prescaler generates the time quanta (Tq) clock from CANCLK. A time quantum is the atomic unit of time handled by the MSCAN.

Eqn. 8-2

$$Tq = \frac{f_{CANCLK}}{(\text{Prescaler value})}$$

A bit time is subdivided into three segments as described in the Bosch CAN specification. (see Figure 8-44):

- SYNC_SEG: This segment has a fixed length of one time quantum. Signal edges are expected to happen within this section.
- Time Segment 1: This segment includes the PROP_SEG and the PHASE_SEG1 of the CAN standard. It can be programmed by setting the parameter TSEG1 to consist of 4 to 16 time quanta.
- Time Segment 2: This segment represents the PHASE_SEG2 of the CAN standard. It can be programmed by setting the TSEG2 parameter to be 2 to 8 time quanta long.

Eqn. 8-3

$$\text{Bit Rate} = \frac{f_{Tq}}{(\text{number of Time Quanta})}$$

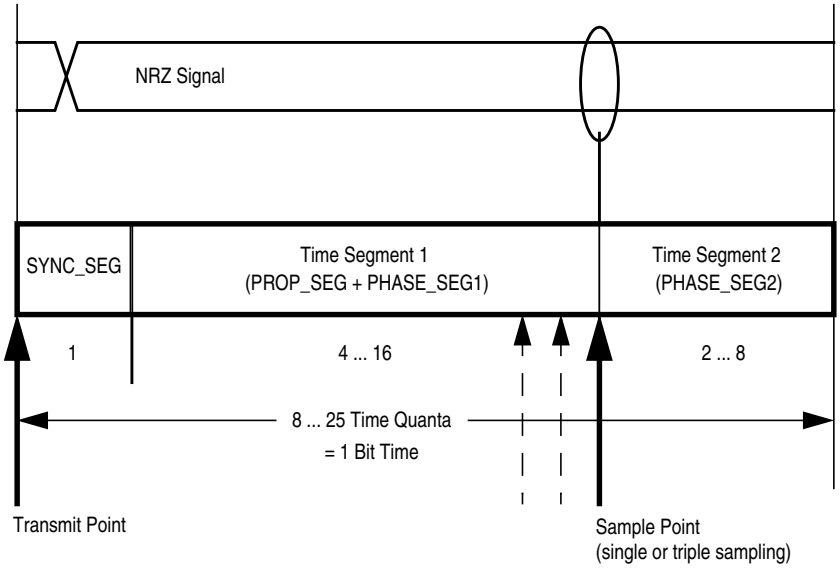

Figure 8-44. Segments within the Bit Time

Table 8-36. Time Segment Syntax

Syntax	Description
SYNC_SEG	System expects transitions to occur on the CAN bus during this period.
Transmit Point	A node in transmit mode transfers a new value to the CAN bus at this point.
Sample Point	A node in receive mode samples the CAN bus at this point. If the three samples per bit option is selected, then this point marks the position of the third sample.

The synchronization jump width (see the Bosch CAN specification for details) can be programmed in a range of 1 to 4 time quanta by setting the SJW parameter.

The SYNC_SEG, TSEG1, TSEG2, and SJW parameters are set by programming the MSCAN bus timing registers (CANBTR0, CANBTR1) (see Section 8.3.2.3, "MSCAN Bus Timing Register 0 (CANBTR0)" and Section 8.3.2.4, "MSCAN Bus Timing Register 1 (CANBTR1)").

Table 8-37 gives an overview of the CAN compliant segment settings and the related parameter values.

NOTE

It is the user's responsibility to ensure the bit time settings are in compliance with the CAN standard.

Table 8-37. CAN Standard Compliant Bit Time Segment Settings

Time Segment 1	TSEG1	Time Segment 2	TSEG2	Synchronization Jump Width	SJW
5 .. 10	4 .. 9	2	1	1 .. 2	0 .. 1
4 .. 11	3 .. 10	3	2	1 .. 3	0 .. 2
5 .. 12	4 .. 11	4	3	1 .. 4	0 .. 3
6 .. 13	5 .. 12	5	4	1 .. 4	0 .. 3
7 .. 14	6 .. 13	6	5	1 .. 4	0 .. 3
8 .. 15	7 .. 14	7	6	1 .. 4	0 .. 3
9 .. 16	8 .. 15	8	7	1 .. 4	0 .. 3

8.4.4 Modes of Operation

8.4.4.1 Normal System Operating Modes

The MSCAN module behaves as described within this specification in all normal system operating modes. Write restrictions exist for some registers.

8.4.4.2 Special System Operating Modes

The MSCAN module behaves as described within this specification in all special system operating modes. Write restrictions which exist on specific registers in normal modes are lifted for test purposes in special modes.

8.4.4.3 Emulation Modes

In all emulation modes, the MSCAN module behaves just like in normal system operating modes as described within this specification.

8.4.4.4 Listen-Only Mode

In an optional CAN bus monitoring mode (listen-only), the CAN node is able to receive valid data frames and valid remote frames, but it sends only "recessive" bits on the CAN bus. In addition, it cannot start a transmission.

If the MAC sub-layer is required to send a "dominant" bit (ACK bit, overload flag, or active error flag), the bit is rerouted internally so that the MAC sub-layer monitors this "dominant" bit, although the CAN bus may remain in recessive state externally.

8.4.4.5 MSCAN Initialization Mode

The MSCAN enters initialization mode when it is enabled (CANE=1).

When entering initialization mode during operation, any on-going transmission or reception is immediately aborted and synchronization to the CAN bus is lost, potentially causing CAN protocol violations. To protect the CAN bus system from fatal consequences of violations, the MSCAN immediately drives TXCAN into a recessive state.

NOTE

The user is responsible for ensuring that the MSCAN is not active when initialization mode is entered. The recommended procedure is to bring the MSCAN into sleep mode (SLPRQ = 1 and SLPAK = 1) before setting the INITRQ bit in the CANCTL0 register. Otherwise, the abort of an on-going message can cause an error condition and can impact other CAN bus devices.

In initialization mode, the MSCAN is stopped. However, interface registers remain accessible. This mode is used to reset the CANCTL0, CANRFLG, CANRIER, CANTFLG, CANTIER, CANTARQ, CANTAAK, and CANTBSEL registers to their default values. In addition, the MSCAN enables the configuration of the CANBTR0, CANBTR1 bit timing registers; CANIDAC; and the CANIDAR, CANIDMR message filters. See Section 8.3.2.1, "MSCAN Control Register 0 (CANCTL0)," for a detailed description of the initialization mode.

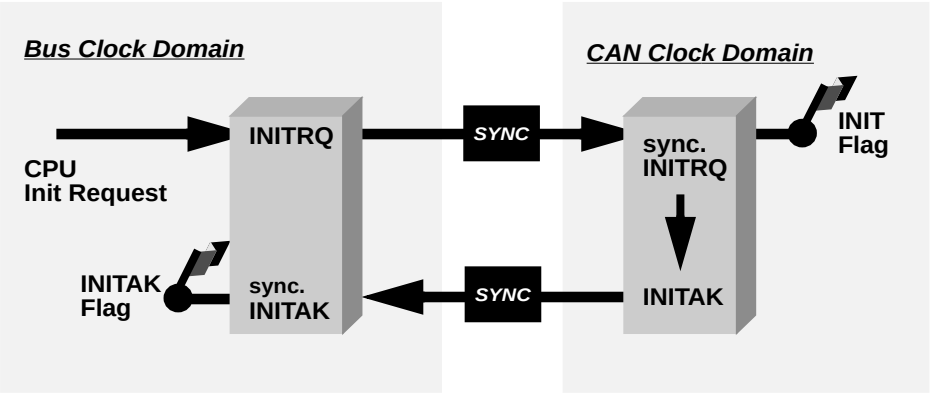

Figure 8-45. Initialization Request/Acknowledge Cycle

Due to independent clock domains within the MSCAN, INITRQ must be synchronized to all domains by using a special handshake mechanism. This handshake causes additional synchronization delay (see Section Figure 8-45., "Initialization Request/Acknowledge Cycle").

If there is no message transfer ongoing on the CAN bus, the minimum delay will be two additional bus clocks and three additional CAN clocks. When all parts of the MSCAN are in initialization mode, the INITAK flag is set. The application software must use INITAK as a handshake indication for the request (INITRQ) to go into initialization mode.

NOTE

The CPU cannot clear INITRQ before initialization mode (INITRQ = 1 and INITAK = 1) is active.

8.4.5 Low-Power Options

If the MSCAN is disabled (CANE = 0), the MSCAN clocks are stopped for power saving.

If the MSCAN is enabled (CANE = 1), the MSCAN has two additional modes with reduced power consumption, compared to normal mode: sleep and power down mode. In sleep mode, power consumption is reduced by stopping all clocks except those to access the registers from the CPU side. In power down mode, all clocks are stopped and no power is consumed.

Table 8-38 summarizes the combinations of MSCAN and CPU modes. A particular combination of modes is entered by the given settings on the CSWAI and SLPRQ/SLPAK bits.

Table 8-38. CPU vs. MSCAN Operating Modes

CPU Mode	MSCAN Mode			
	Normal	Reduced Power Consumption		
		Sleep	Power Down	Disabled (CANE=0)
RUN	CSWAI = X[1] SLPRQ = 0 SLPAK = 0	CSWAI = X SLPRQ = 1 SLPAK = 1		CSWAI = X SLPRQ = X SLPAK = X
WAIT	CSWAI = 0 SLPRQ = 0 SLPAK = 0	CSWAI = 0 SLPRQ = 1 SLPAK = 1	CSWAI = 1 SLPRQ = X SLPAK = X	CSWAI = X SLPRQ = X SLPAK = X
STOP			CSWAI = X SLPRQ = X SLPAK = X	CSWAI = X SLPRQ = X SLPAK = X

1. 'X' means don't care.

8.4.5.1 Operation in Run Mode

As shown in Table 8-38, only MSCAN sleep mode is available as low power option when the CPU is in run mode.

8.4.5.2 Operation in Wait Mode

The WAI instruction puts the MCU in a low power consumption stand-by mode. If the CSWAI bit is set, additional power can be saved in power down mode because the CPU clocks are stopped. After leaving this power down mode, the MSCAN restarts and enters normal mode again.

While the CPU is in wait mode, the MSCAN can be operated in normal mode and generate interrupts (registers can be accessed via background debug mode).

8.4.5.3 Operation in Stop Mode

The STOP instruction puts the MCU in a low power consumption stand-by mode. In stop mode, the MSCAN is set in power down mode regardless of the value of the SLPRQ/SLPAK and CSWAI bits (Table 8-38).

8.4.5.4 MSCAN Normal Mode

This is a non-power-saving mode. Enabling the MSCAN puts the module from disabled mode into normal mode. In this mode the module can either be in initialization mode or out of initialization mode. See Section 8.4.4.5, "MSCAN Initialization Mode".

8.4.5.5 MSCAN Sleep Mode

The CPU can request the MSCAN to enter this low power mode by asserting the SLPRQ bit in the CANCTL0 register. The time when the MSCAN enters sleep mode depends on a fixed synchronization delay and its current activity:

- If there are one or more message buffers scheduled for transmission (TXEx = 0), the MSCAN will continue to transmit until all transmit message buffers are empty (TXEx = 1, transmitted successfully or aborted) and then goes into sleep mode.
- If the MSCAN is receiving, it continues to receive and goes into sleep mode as soon as the CAN bus next becomes idle.
- If the MSCAN is neither transmitting nor receiving, it immediately goes into sleep mode.

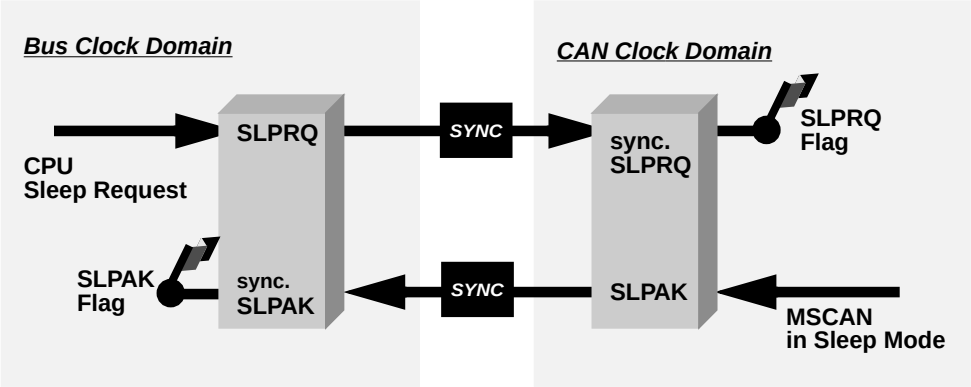

Figure 8-46. Sleep Request / Acknowledge Cycle

NOTE

The application software must avoid setting up a transmission (by clearing one or more TXEx flag(s)) and immediately request sleep mode (by setting SLPRQ). Whether the MSCAN starts transmitting or goes into sleep mode directly depends on the exact sequence of operations.

If sleep mode is active, the SLPRQ and SLPAK bits are set (Figure 8-46). The application software must use SLPAK as a handshake indication for the request (SLPRQ) to go into sleep mode.

When in sleep mode (SLPRQ = 1 and SLPAK = 1), the MSCAN stops its internal clocks. However, clocks that allow register accesses from the CPU side continue to run.

If the MSCAN is in bus-off state, it stops counting the 128 occurrences of 11 consecutive recessive bits due to the stopped clocks. TXCAN remains in a recessive state. If RXF = 1, the message can be read and RXF can be cleared. Shifting a new message into the foreground buffer of the receiver FIFO (RxFG) does not take place while in sleep mode.

It is possible to access the transmit buffers and to clear the associated TXE flags. No message abort takes place while in sleep mode.

If the WUPE bit in CANCTL0 is not asserted, the MSCAN will mask any activity it detects on CAN. RXCAN is therefore held internally in a recessive state. This locks the MSCAN in sleep mode. WUPE must be set before entering sleep mode to take effect.

The MSCAN is able to leave sleep mode (wake up) only when:

- CAN bus activity occurs and WUPE = 1

  or
- the CPU clears the SLPRQ bit

NOTE

The CPU cannot clear the SLPRQ bit before sleep mode (SLPRQ = 1 and SLPAK = 1) is active.

After wake-up, the MSCAN waits for 11 consecutive recessive bits to synchronize to the CAN bus. As a consequence, if the MSCAN is woken-up by a CAN frame, this frame is not received.

The receive message buffers (RxFG and RxBG) contain messages if they were received before sleep mode was entered. All pending actions will be executed upon wake-up; copying of RxBG into RxFG, message aborts and message transmissions. If the MSCAN remains in bus-off state after sleep mode was exited, it continues counting the 128 occurrences of 11 consecutive recessive bits.

8.4.5.6 MSCAN Power Down Mode

The MSCAN is in power down mode (Table 8-38) when

- CPU is in stop mode

  or
- CPU is in wait mode and the CSWAI bit is set

When entering the power down mode, the MSCAN immediately stops all ongoing transmissions and receptions, potentially causing CAN protocol violations. To protect the CAN bus system from fatal consequences of violations to the above rule, the MSCAN immediately drives TXCAN into a recessive state.

NOTE

The user is responsible for ensuring that the MSCAN is not active when power down mode is entered. The recommended procedure is to bring the MSCAN into Sleep mode before the STOP or WAI instruction (if CSWAI is set) is executed. Otherwise, the abort of an ongoing message can cause an error condition and impact other CAN bus devices.

In power down mode, all clocks are stopped and no registers can be accessed. If the MSCAN was not in sleep mode before power down mode became active, the module performs an internal recovery cycle after powering up. This causes some fixed delay before the module enters normal mode again.

8.4.5.7 Disabled Mode

The MSCAN is in disabled mode out of reset (CANE=0). All module clocks are stopped for power saving, however the register map can still be accessed as specified.

8.4.5.8 Programmable Wake-Up Function

The MSCAN can be programmed to wake up from sleep or power down mode as soon as CAN bus activity is detected (see control bit WUPE in MSCAN Control Register 0 (CANCTL0). The sensitivity to existing CAN bus action can be modified by applying a low-pass filter function to the RXCAN input line (see control bit WUPM in Section 8.3.2.2, "MSCAN Control Register 1 (CANCTL1)").

This feature can be used to protect the MSCAN from wake-up due to short glitches on the CAN bus lines. Such glitches can result from—for example—electromagnetic interference within noisy environments.

8.4.6 Reset Initialization

The reset state of each individual bit is listed in Section 8.3.2, "Register Descriptions," which details all the registers and their bit-fields.

8.4.7 Interrupts

This section describes all interrupts originated by the MSCAN. It documents the enable bits and generated flags. Each interrupt is listed and described separately.

8.4.7.1 Description of Interrupt Operation

The MSCAN supports four interrupt vectors (see Table 8-39), any of which can be individually masked (for details see Section 8.3.2.6, "MSCAN Receiver Interrupt Enable Register (CANRIER)" to Section 8.3.2.8, "MSCAN Transmitter Interrupt Enable Register (CANTIER)").

NOTE

The dedicated interrupt vector addresses are defined in the Resets and Interrupts chapter.

Table 8-39. Interrupt Vectors

Interrupt Source	CCR Mask	Local Enable
Wake-Up Interrupt (WUPIF)	I bit	CANRIER (WUPIE)
Error Interrupts Interrupt (CSCIF, OVRIF)	I bit	CANRIER (CSCIE, OVRIE)
Receive Interrupt (RXF)	I bit	CANRIER (RXFIE)
Transmit Interrupts (TXE[2:0])	I bit	CANTIER (TXEIE[2:0])

8.4.7.2 Transmit Interrupt

At least one of the three transmit buffers is empty (not scheduled) and can be loaded to schedule a message for transmission. The TXEx flag of the empty message buffer is set.

8.4.7.3 Receive Interrupt

A message is successfully received and shifted into the foreground buffer (RxFG) of the receiver FIFO. This interrupt is generated immediately after receiving the EOF symbol. The RXF flag is set. If there are multiple messages in the receiver FIFO, the RXF flag is set as soon as the next message is shifted to the foreground buffer.

8.4.7.4 Wake-Up Interrupt

A wake-up interrupt is generated if activity on the CAN bus occurs during MSCAN sleep or power-down mode.

NOTE

This interrupt can only occur if the MSCAN was in sleep mode (SLPRQ = 1 and SLPAK = 1) before entering power down mode, the wake-up option is enabled (WUPE = 1), and the wake-up interrupt is enabled (WUPIE = 1).

8.4.7.5 Error Interrupt

An error interrupt is generated if an overrun of the receiver FIFO, error, warning, or bus-off condition occurrs. MSCAN Receiver Flag Register (CANRFLG) indicates one of the following conditions:

- **Overrun** — An overrun condition of the receiver FIFO as described in Section 8.4.2.3, "Receive Structures," occurred.
- **CAN Status Change** — The actual value of the transmit and receive error counters control the CAN bus state of the MSCAN. As soon as the error counters skip into a critical range (Tx/Rx-warning, Tx/Rx-error, bus-off) the MSCAN flags an error condition. The status change, which caused the error condition, is indicated by the TSTAT and RSTAT flags (see Section 8.3.2.5, "MSCAN Receiver Flag Register (CANRFLG)" and Section 8.3.2.6, "MSCAN Receiver Interrupt Enable Register (CANRIER)").

8.4.7.6 Interrupt Acknowledge

Interrupts are directly associated with one or more status flags in either the MSCAN Receiver Flag Register (CANRFLG) or the MSCAN Transmitter Flag Register (CANTFLG). Interrupts are pending as long as one of the corresponding flags is set. The flags in CANRFLG and CANTFLG must be reset within the interrupt handler to handshake the interrupt. The flags are reset by writing a 1 to the corresponding bit position. A flag cannot be cleared if the respective condition prevails.

NOTE

It must be guaranteed that the CPU clears only the bit causing the current interrupt. For this reason, bit manipulation instructions (BSET) must not be used to clear interrupt flags. These instructions may cause accidental clearing of interrupt flags which are set after entering the current interrupt service routine.

8.5 Initialization/Application Information

8.5.1 MSCAN initialization

The procedure to initially start up the MSCAN module out of reset is as follows:

1. Assert CANE
2. Write to the configuration registers in initialization mode
3. Clear INITRQ to leave initialization mode

If the configuration of registers which are only writable in initialization mode shall be changed:

1. Bring the module into sleep mode by setting SLPRQ and awaiting SLPAK to assert after the CAN bus becomes idle.
2. Enter initialization mode: assert INITRQ and await INITAK
3. Write to the configuration registers in initialization mode
4. Clear INITRQ to leave initialization mode and continue

8.5.2 Bus-Off Recovery

The bus-off recovery is user configurable. The bus-off state can either be left automatically or on user request.

For reasons of backwards compatibility, the MSCAN defaults to automatic recovery after reset. In this case, the MSCAN will become error active again after counting 128 occurrences of 11 consecutive recessive bits on the CAN bus (see the Bosch CAN specification for details).

If the MSCAN is configured for user request (BORM set in MSCAN Control Register 1 (CANCTL1)), the recovery from bus-off starts after both independent events have become true:

- 128 occurrences of 11 consecutive recessive bits on the CAN bus have been monitored
- BOHOLD in MSCAN Miscellaneous Register (CANMISC) has been cleared by the user

These two events may occur in any order.

Chapter 9
Analog-to-Digital Converter (ADC12B10C)

Revision History

Version Number	Revision Date	Effective Date	Author	Description of Changes
V01.00	25 July 2007	25 July 2007		Initial version
V01.01	14 Sept 2007	14 Sept 2007		Added reserved registers at the end the memory map.
V01.02	1 Oct 2007	1 Oct 2007		Added following mention where applies: ***(n conversion number, NOT channel number!)***
V01.03	9 Oct 2007	9 Oct 2007		Modified table “Analog Input Channel Select Coding” due to new customer feature (SPECIAL17).

9.1 Introduction

The ADC12B10C is a 10-channel, 12-bit, multiplexed input successive approximation analog-to-digital converter. Refer to device electrical specifications for ATD accuracy.

9.1.1 Features

- 8-, 10-, or 12-bit resolution.
- Conversion in Stop Mode using internally generated clock
- Automatic return to low power after conversion sequence
- Automatic compare with interrupt for higher than or less/equal than programmable value
- Programmable sample time.
- Left/right justified result data.
- External trigger control.
- Sequence complete interrupt.
- Analog input multiplexer for 10 analog input channels.
- Special conversions for V_{RH}, V_{RL}, $(V_{RL}+V_{RH})/2$.
- 1-to-10 conversion sequence lengths.
- Continuous conversion mode.
- Multiple channel scans.

- Configurable external trigger functionality on any AD channel or any of four additional trigger inputs. The four additional trigger inputs can be chip external or internal. Refer to device specification for availability and connectivity.
- Configurable location for channel wrap around (when converting multiple channels in a sequence).

9.1.2 Modes of Operation

9.1.2.1 Conversion Modes

There is software programmable selection between performing **single** or **continuous conversion** on a **single channel** or **multiple channels**.

9.1.2.2 MCU Operating Modes

- **Stop Mode**
  - **ICLKSTP=0 (in ATDCTL2 register)**
    Entering Stop Mode aborts any conversion sequence in progress and if a sequence was aborted restarts it after exiting stop mode. This has the same effect/consequences as starting a conversion sequence with write to ATDCTL5. So after exiting from stop mode with a previously aborted sequence all flags are cleared etc.
  - **ICLKSTP=1 (in ATDCTL2 register)**
    A/D conversion sequence seamless continues in Stop Mode based on the internally generated clock ICLK as ATD clock. For conversions during transition from Run to Stop Mode or vice versa the result is not written to the results register, no CCF flag is set and no compare is done. When converting in Stop Mode (ICLKSTP=1) an ATD Stop Recovery time $t_{ATDSTPRCV}$ is required to switch back to bus clock based ATDCLK when leaving Stop Mode. Do not access ATD registers during this time.
- **Wait Mode**
  ADC12B10C behaves same in Run and Wait Mode. For reduced power consumption continuous conversions should be aborted before entering Wait mode.
- **Freeze Mode**
  In Freeze Mode the ADC12B10C will either continue or finish or stop converting according to the FRZ1 and FRZ0 bits. This is useful for debugging and emulation.

9.1.3 Block Diagram

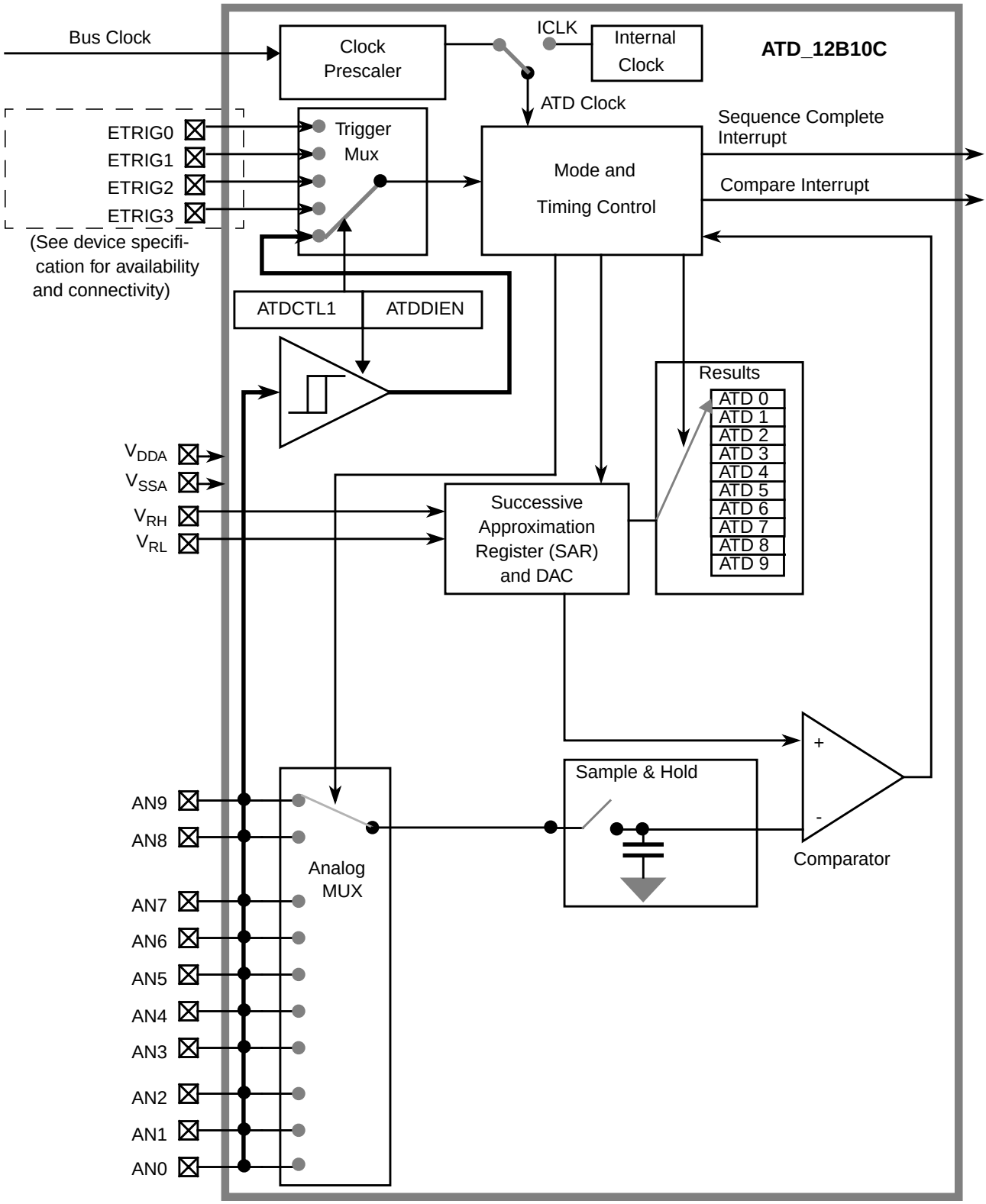

Figure 9-1. ADC12B10C Block Diagram

9.2 Signal Description

This section lists all inputs to the ADC12B10C block.

9.2.1 Detailed Signal Descriptions

9.2.1.1 AN*x* (*x* = 9, 8, 7, 6, 5, 4, 3, 2, 1, 0)

This pin serves as the analog input Channel *x*. It can also be configured as digital port or external trigger for the ATD conversion.

9.2.1.2 ETRIG3, ETRIG2, ETRIG1, ETRIG0

These inputs can be configured to serve as an external trigger for the ATD conversion.

Refer to device specification for availability and connection of these inputs!

9.2.1.3 V_{RH}, V_{RL}

V_{RH} is the high reference voltage, V_{RL} is the low reference voltage for ATD conversion.

9.2.1.4 V_{DDA}, V_{SSA}

These pins are the power supplies for the analog circuitry of the ADC12B10C block.

9.3 Memory Map and Register Definition

This section provides a detailed description of all registers accessible in the ADC12B10C.

9.3.1 Module Memory Map

Figure 9-2 gives an overview on all ADC12B10C registers.

NOTE

Register Address = Base Address + Address Offset, where the Base Address is defined at the MCU level and the Address Offset is defined at the module level.

Address	Name		Bit 7	6	5	4	3	2	1	Bit 0
0x0000	ATDCTL0	R W	Reserved	0	0	0	WRAP3	WRAP2	WRAP1	WRAP0
0x0001	ATDCTL1	R W	ETRIGSEL	SRES1	SRES0	SMP_DIS	ETRIGCH3	ETRIGCH2	ETRIGCH1	ETRIGCH0
0x0002	ATDCTL2	R W	0	AFFC	ICLKSTP	ETRIGLE	ETRIGP	ETRIGE	ASCIE	ACMPIE

= Unimplemented or Reserved

Figure 9-2. ADC12B10C Register Summary (Sheet 1 of 3)

Address	Name		Bit 7	6	5	4	3	2	1	Bit 0
0x0003	ATDCTL3	R	DJM	S8C	S4C	S2C	S1C	FIFO	FRZ1	FRZ0
		W								
0x0004	ATDCTL4	R	SMP2	SMP1	SMP0	PRS[4:0]				
		W								
0x0005	ATDCTL5	R	0	SC	SCAN	MULT	CD	CC	CB	CA
		W								
0x0006	ATDSTAT0	R	SCF	0	ETORF	FIFOR	CC3	CC2	CC1	CC0
		W								
0x0007	Unimple-mented	R	0	0	0	0	0	0	0	0
		W								
0x0008	ATDCMPEH	R	0	0	0	0	0	0	CMPE[9:8]	
		W								
0x0009	ATDCMPEL	R	CMPE[7:0]							
		W								
0x000A	ATDSTAT2H	R	0	0	0	0	0	0	CCF[9:8]	
		W								
0x000B	ATDSTAT2L	R	CCF[7:0]							
		W								
0x000C	ATDDIENH	R	0	0	0	0	0	0	IEN[9:8]	
		W								
0x000D	ATDDIENL	R	IEN[7:0]							
		W								
0x000E	ATDCMPHTH	R	0	0	0	0	0	0	CMPHT[9:8]	
		W								
0x000F	ATDCMPHTL	R	CMPHT[7:0]							
		W								
0x0010	ATDDR0	R	See Section 9.3.2.12.1, “Left Justified Result Data (DJM=0)” and Section 9.3.2.12.2, “Right Justified Result Data (DJM=1)”							
		W								
0x0012	ATDDR1	R	See Section 9.3.2.12.1, “Left Justified Result Data (DJM=0)” and Section 9.3.2.12.2, “Right Justified Result Data (DJM=1)”							
		W								
0x0014	ATDDR2	R	See Section 9.3.2.12.1, “Left Justified Result Data (DJM=0)” and Section 9.3.2.12.2, “Right Justified Result Data (DJM=1)”							
		W								
0x0016	ATDDR3	R	See Section 9.3.2.12.1, “Left Justified Result Data (DJM=0)” and Section 9.3.2.12.2, “Right Justified Result Data (DJM=1)”							
		W								
0x0018	ATDDR4	R	See Section 9.3.2.12.1, “Left Justified Result Data (DJM=0)” and Section 9.3.2.12.2, “Right Justified Result Data (DJM=1)”							
		W								
0x001A	ATDDR5	R	See Section 9.3.2.12.1, “Left Justified Result Data (DJM=0)” and Section 9.3.2.12.2, “Right Justified Result Data (DJM=1)”							
		W								
0x001C	ATDDR6	R	See Section 9.3.2.12.1, “Left Justified Result Data (DJM=0)” and Section 9.3.2.12.2, “Right Justified Result Data (DJM=1)”							
		W								
0x001E	ATDDR7	R	See Section 9.3.2.12.1, “Left Justified Result Data (DJM=0)” and Section 9.3.2.12.2, “Right Justified Result Data (DJM=1)”							
		W								

= Unimplemented or Reserved

Figure 9-2. ADC12B10C Register Summary (Sheet 2 of 3)

Address	Name		Bit 7	6	5	4	3	2	1	Bit 0
0x0020	ATDDR8	R W	See Section 9.3.2.12.1, “Left Justified Result Data (DJM=0)” and Section 9.3.2.12.2, “Right Justified Result Data (DJM=1)”							
0x0022	ATDDR9	R W	See Section 9.3.2.12.1, “Left Justified Result Data (DJM=0)” and Section 9.3.2.12.2, “Right Justified Result Data (DJM=1)”							
0x0024 - 0x002F	Unimple-mented	R	0	0	0	0	0	0	0	0
		W								

= Unimplemented or Reserved

Figure 9-2. ADC12B10C Register Summary (Sheet 3 of 3)

9.3.2 Register Descriptions

This section describes in address order all the ADC12B10C registers and their individual bits.

9.3.2.1 ATD Control Register 0 (ATDCTL0)

Writes to this register will abort current conversion sequence.

Module Base + 0x0000

	7	6	5	4	3	2	1	0
R	Reserved	0	0	0	WRAP3	WRAP2	WRAP1	WRAP0
W								
Reset	0	0	0	0	1	1	1	1

= Unimplemented or Reserved

Figure 9-3. ATD Control Register 0 (ATDCTL0)

Read: Anytime

Write: Anytime, in special modes always write 0 to Reserved Bit 7.

Table 9-1. ATDCTL0 Field Descriptions

Field	Description
3-0 WRAP[3-0]	**Wrap Around Channel Select Bits** — These bits determine the channel for wrap around when doing multi-channel conversions. The coding is summarized in Table 9-2.

Table 9-2. Multi-Channel Wrap Around Coding

WRAP3	WRAP2	WRAP1	WRAP0	Multiple Channel Conversions (MULT = 1) Wraparound to AN0 after Converting
0	0	0	0	Reserved(1)
0	0	0	1	AN1
0	0	1	0	AN2
0	0	1	1	AN3
0	1	0	0	AN4
0	1	0	1	AN5

Table 9-2. Multi-Channel Wrap Around Coding

WRAP3	WRAP2	WRAP1	WRAP0	Multiple Channel Conversions (MULT = 1) Wraparound to AN0 after Converting
0	1	1	0	AN6
0	1	1	1	AN7
1	0	0	0	AN8
1	0	0	1	AN9
1	0	1	0	AN9
1	0	1	1	AN9
1	1	0	0	AN9
1	1	0	1	AN9
1	1	1	0	AN9
1	1	1	1	AN9

1. If only AN0 should be converted use MULT=0.

9.3.2.2 ATD Control Register 1 (ATDCTL1)

Writes to this register will abort current conversion sequence.

Module Base + 0x0001

	7	6	5	4	3	2	1	0
R W	ETRIGSEL	SRES1	SRES0	SMP_DIS	ETRIGCH3	ETRIGCH2	ETRIGCH1	ETRIGCH0
Reset	0	0	1	0	1	1	1	1

Figure 9-4. ATD Control Register 1 (ATDCTL1)

Read: Anytime

Write: Anytime

Table 9-3. ATDCTL1 Field Descriptions

Field	Description
7 ETRIGSEL	**External Trigger Source Select** — This bit selects the external trigger source to be either one of the AD channels or one of the ETRIG3-0 inputs. See device specification for availability and connectivity of ETRIG3-0 inputs. If a particular ETRIG3-0 input option is not available, writing a 1 to ETRISEL only sets the bit but has not effect, this means that one of the AD channels (selected by ETRIGCH3-0) is configured as the source for external trigger. The coding is summarized in Table 9-5.
6–5 SRES[1:0]	**A/D Resolution Select** — These bits select the resolution of A/D conversion results. See Table 9-4 for coding.

Table 9-3. ATDCTL1 Field Descriptions (continued)

Field	Description
4 SMP_DIS	**Discharge Before Sampling Bit** 0 No discharge before sampling. 1 The internal sample capacitor is discharged before sampling the channel. This adds 2 ATD clock cycles to the sampling time. This can help to detect an open circuit instead of measuring the previous sampled channel.
3–0 ETRIGCH[3:0]	**External Trigger Channel Select** — These bits select one of the AD channels or one of the ETRIG3-0 inputs as source for the external trigger. The coding is summarized in Table 9-5.

Table 9-4. A/D Resolution Coding

SRES1	SRES0	A/D Resolution
0	0	8-bit data
0	1	10-bit data
1	0	12-bit data
1	1	Reserved

Table 9-5. External Trigger Channel Select Coding

ETRIGSEL	ETRIGCH3	ETRIGCH2	ETRIGCH1	ETRIGCH0	External trigger source is
0	0	0	0	0	AN0
0	0	0	0	1	AN1
0	0	0	1	0	AN2
0	0	0	1	1	AN3
0	0	1	0	0	AN4
0	0	1	0	1	AN5
0	0	1	1	0	AN6
0	0	1	1	1	AN7
0	1	0	0	0	AN8
0	1	0	0	1	AN9
0	1	0	1	0	AN9
0	1	0	1	1	AN9
0	1	1	0	0	AN9
0	1	1	0	1	AN9
0	1	1	1	0	AN9
0	1	1	1	1	AN9
1	0	0	0	0	ETRIG0[(1)]
1	0	0	0	1	ETRIG1[1]
1	0	0	1	0	ETRIG2[1]
1	0	0	1	1	ETRIG3[1]
1	0	1	X	X	Reserved
1	1	X	X	X	Reserved

1. Only if ETRIG3-0 input option is available (see device specification), else ETRISEL is ignored, that means external trigger source is still on one of the AD channels selected by ETRIGCH3-0

9.3.2.3 ATD Control Register 2 (ATDCTL2)

Writes to this register will abort current conversion sequence.

Module Base + 0x0002

	7	6	5	4	3	2	1	0
R	0	AFFC	ICLKSTP	ETRIGLE	ETRIGP	ETRIGE	ASCIE	ACMPIE
W								
Reset	0	0	0	0	0	0	0	0

= Unimplemented or Reserved

Figure 9-5. ATD Control Register 2 (ATDCTL2)

Read: Anytime

Write: Anytime

Table 9-6. ATDCTL2 Field Descriptions

Field	Description
6 AFFC	**ATD Fast Flag Clear All** 0 ATD flag clearing done by write 1 to respective CCF[*n*] flag. 1 Changes all ATD conversion complete flags to a fast clear sequence. For compare disabled (CMPE[*n*]=0) a read access to the result register will cause the associated CCF[*n*] flag to clear automatically. For compare enabled (CMPE[*n*]=1) a write access to the result register will cause the associated CCF[*n*] flag to clear automatically.
5 ICLKSTP	**Internal Clock in Stop Mode Bit** — This bit enables A/D conversions in stop mode. When going into stop mode and ICLKSTP=1 the ATD conversion clock is automatically switched to the internally generated clock ICLK. Current conversion sequence will seamless continue. Conversion speed will change from prescaled bus frequency to the ICLK frequency (see ATD Electrical Characteristics in device description). The prescaler bits PRS4-0 in ATDCTL4 have no effect on the ICLK frequency. For conversions during stop mode the automatic compare interrupt or the sequence complete interrupt can be used to inform software handler about changing A/D values. External trigger will not work while converting in stop mode. For conversions during transition from Run to Stop Mode or vice versa the result is not written to the results register, no CCF flag is set and no compare is done. When converting in Stop Mode (ICLKSTP=1) an ATD Stop Recovery time $t_{ATDSTPRCV}$ is required to switch back to bus clock based ATDCLK when leaving Stop Mode. Do not access ATD registers during this time. 0 If A/D conversion sequence is ongoing when going into stop mode, the actual conversion sequence will be aborted and automatically restarted when exiting stop mode. 1 A/D continues to convert in stop mode using internally generated clock (ICLK)
4 ETRIGLE	**External Trigger Level/Edge Control** — This bit controls the sensitivity of the external trigger signal. See Table 9-7 for details.
3 ETRIGP	**External Trigger Polarity** — This bit controls the polarity of the external trigger signal. See Table 9-7 for details.
2 ETRIGE	**External Trigger Mode Enable** — This bit enables the external trigger on one of the AD channels or one of the ETRIG3-0 inputs as described in Table 9-5. If external trigger source is one of the AD channels, the digital input buffer of this channel is enabled. The external trigger allows to synchronize the start of conversion with external events. External trigger will not work while converting in stop mode. 0 Disable external trigger 1 Enable external trigger

Table 9-6. ATDCTL2 Field Descriptions (continued)

Field	Description
1 ASCIE	**ATD Sequence Complete Interrupt Enable** 0 ATD Sequence Complete interrupt requests are disabled. 1 ATD Sequence Complete interrupt will be requested whenever SCF=1 is set.
0 ACMPIE	**ATD Compare Interrupt Enable** — If automatic compare is enabled for conversion *n* (CMPE[*n*]=1 in ATDCMPE register) this bit enables the compare interrupt. If the CCF[*n*] flag is set (showing a successful compare for conversion *n*), the compare interrupt is triggered. 0 ATD Compare interrupt requests are disabled. 1 For the conversions in a sequence for which automatic compare is enabled (CMPE[*n*]=1), ATD Compare Interrupt will be requested whenever any of the respective CCF flags is set.

Table 9-7. External Trigger Configurations

ETRIGLE	ETRIGP	External Trigger Sensitivity
0	0	Falling edge
0	1	Rising edge
1	0	Low level
1	1	High level

9.3.2.4 ATD Control Register 3 (ATDCTL3)

Writes to this register will abort current conversion sequence.

Module Base + 0x0003

	7	6	5	4	3	2	1	0
R W	DJM	S8C	S4C	S2C	S1C	FIFO	FRZ1	FRZ0
Reset	0	0	1	0	0	0	0	0

= Unimplemented or Reserved

Figure 9-6. ATD Control Register 3 (ATDCTL3)

Read: Anytime

Write: Anytime

Table 9-8. ATDCTL3 Field Descriptions

Field	Description
7 DJM	**Result Register Data Justification** — Result data format is always unsigned. This bit controls justification of conversion data in the result registers. 0 Left justified data in the result registers. 1 Right justified data in the result registers. Table 9-9 gives examples ATD results for an input signal range between 0 and 5.12 Volts.
6–3 S8C, S4C, S2C, S1C	**Conversion Sequence Length** — These bits control the number of conversions per sequence. Table 9-10 shows all combinations. At reset, S4C is set to 1 (sequence length is 4). This is to maintain software continuity to HC12 family.
2 FIFO	**Result Register FIFO Mode** — If this bit is zero (non-FIFO mode), the A/D conversion results map into the result registers based on the conversion sequence; the result of the first conversion appears in the first result register (ATDDR0), the second result in the second result register (ATDDR1), and so on. If this bit is one (FIFO mode) the conversion counter is not reset at the beginning or ending of a conversion sequence; sequential conversion results are placed in consecutive result registers. In a continuously scanning conversion sequence, the result register counter will wrap around when it reaches the end of the result register file. The conversion counter value (CC3-0 in ATDSTAT0) can be used to determine where in the result register file, the current conversion result will be placed. Aborting a conversion or starting a new conversion clears the conversion counter even if FIFO=1. So the first result of a new conversion sequence, started by writing to ATDCTL5, will always be place in the first result register (ATDDDR0). Intended usage of FIFO mode is continuos conversion (SCAN=1) or triggered conversion (ETRIG=1). Which result registers hold valid data can be tracked using the conversion complete flags. Fast flag clear mode may or may not be useful in a particular application to track valid data. If this bit is one, automatic compare of result registers is always disabled, that is ADC12B10C will behave as if ACMPIE and all CPME[*n*] were zero. 0 Conversion results are placed in the corresponding result register up to the selected sequence length. 1 Conversion results are placed in consecutive result registers (wrap around at end).
1–0 FRZ[1:0]	**Background Debug Freeze Enable** — When debugging an application, it is useful in many cases to have the ATD pause when a breakpoint (Freeze Mode) is encountered. These 2 bits determine how the ATD will respond to a breakpoint as shown in Table 9-11. Leakage onto the storage node and comparator reference capacitors may compromise the accuracy of an immediately frozen conversion depending on the length of the freeze period.

Table 9-9. Examples of ideal decimal ATD Results

Input Signal V_{RL} = 0 Volts V_{RH} = 5.12 Volts	8-Bit Codes (resolution=20mV)	10-Bit Codes (resolution=5mV)	12-Bit Codes (transfer curve has 1.25mV offset) (resolution=1.25mV)
5.120 Volts	255	1023	4095
...	...	...	...
0.022	1	4	17
0.020	1	4	16
0.018	1	4	14
0.016	1	3	12
0.014	1	3	11
0.012	1	2	9
0.010	1	2	8
0.008	0	2	6
0.006	0	1	4
0.004	0	1	3
0.003	0	0	2
0.002	0	0	1
0.000	0	0	0

Table 9-10. Conversion Sequence Length Coding

S8C	S4C	S2C	S1C	Number of Conversions per Sequence
0	0	0	0	10
0	0	0	1	1
0	0	1	0	2
0	0	1	1	3
0	1	0	0	4
0	1	0	1	5
0	1	1	0	6
0	1	1	1	7
1	0	0	0	8
1	0	0	1	9
1	0	1	0	10
1	0	1	1	10
1	1	0	0	10
1	1	0	1	10
1	1	1	0	10
1	1	1	1	10

Table 9-11. ATD Behavior in Freeze Mode (Breakpoint)

FRZ1	FRZ0	Behavior in Freeze Mode
0	0	Continue conversion

Table 9-11. ATD Behavior in Freeze Mode (Breakpoint)

FRZ1	FRZ0	Behavior in Freeze Mode
0	1	Reserved
1	0	Finish current conversion, then freeze
1	1	Freeze Immediately

9.3.2.5 ATD Control Register 4 (ATDCTL4)

Writes to this register will abort current conversion sequence.

Module Base + 0x0004

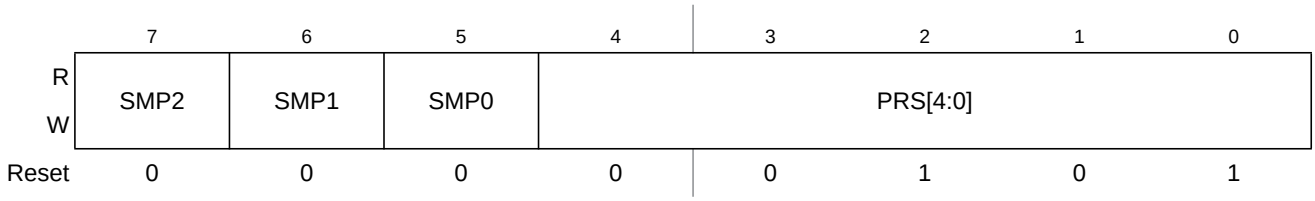

Figure 9-7. ATD Control Register 4 (ATDCTL4)

Read: Anytime

Write: Anytime

Table 9-12. ATDCTL4 Field Descriptions

Field	Description
7–5 SMP[2:0]	**Sample Time Select** — These three bits select the length of the sample time in units of ATD conversion clock cycles. Note that the ATD conversion clock period is itself a function of the prescaler value (bits PRS4-0). Table 9-13 lists the available sample time lengths.
4–0 PRS[4:0]	**ATD Clock Prescaler** — These 5 bits are the binary prescaler value PRS. The ATD conversion clock frequency is calculated as follows: $f_{ATDCLK} = \frac{f_{BUS}}{2 \times (PRS + 1)}$ Refer to Device Specification for allowed frequency range of f_{ATDCLK}.

Table 9-13. Sample Time Select

SMP2	SMP1	SMP0	Sample Time in Number of ATD Clock Cycles
0	0	0	4
0	0	1	6
0	1	0	8
0	1	1	10
1	0	0	12
1	0	1	16
1	1	0	20
1	1	1	24

9.3.2.6 ATD Control Register 5 (ATDCTL5)

Writes to this register will abort current conversion sequence and start a new conversion sequence. If external trigger is enabled (ETRIGE=1) an initial write to ATDCTL5 is required to allow starting of a conversion sequence which will then occur on each trigger event. Start of conversion means the beginning of the sampling phase.

Module Base + 0x0005

	7	6	5	4	3	2	1	0
R	0	SC	SCAN	MULT	CD	CC	CB	CA
W								
Reset	0	0	0	0	0	0	0	0

= Unimplemented or Reserved

Figure 9-8. ATD Control Register 5 (ATDCTL5)

Read: Anytime

Write: Anytime

Table 9-14. ATDCTL5 Field Descriptions

Field	Description
6 SC	**Special Channel Conversion Bit** — If this bit is set, then special channel conversion can be selected using CD, CC, CB and CA of ATDCTL5. Table 9-15 lists the coding. 0 Special channel conversions disabled 1 Special channel conversions enabled
5 SCAN	**Continuous Conversion Sequence Mode** — This bit selects whether conversion sequences are performed continuously or only once. If external trigger is enabled (ETRIGE=1) setting this bit has no effect, that means external trigger always starts a single conversion sequence. 0 Single conversion sequence 1 Continuous conversion sequences (scan mode)
4 MULT	**Multi-Channel Sample Mode** — When MULT is 0, the ATD sequence controller samples only from the specified analog input channel for an entire conversion sequence. The analog channel is selected by channel selection code (control bits CD/CC/CB/CA located in ATDCTL5). When MULT is 1, the ATD sequence controller samples across channels. The number of channels sampled is determined by the sequence length value (S8C, S4C, S2C, S1C). The first analog channel examined is determined by channel selection code (CD, CC, CB, CA control bits); subsequent channels sampled in the sequence are determined by incrementing the channel selection code or wrapping around to AN0 (channel 0). 0 Sample only one channel 1 Sample across several channels
3–0 CD, CC, CB, CA	**Analog Input Channel Select Code** — These bits select the analog input channel(s) whose signals are sampled and converted to digital codes. Table 9-15 lists the coding used to select the various analog input channels. In the case of single channel conversions (MULT=0), this selection code specifies the channel to be examined. In the case of multiple channel conversions (MULT=1), this selection code specifies the first channel to be examined in the conversion sequence. Subsequent channels are determined by incrementing the channel selection code or wrapping around to AN0 (after converting the channel defined by the Wrap Around Channel Select Bits WRAP3-0 in ATDCTL0). In case of starting with a channel number higher than the one defined by WRAP3-0 the first wrap around will be AN9 to AN0.

Table 9-15. Analog Input Channel Select Coding

SC	CD	CC	CB	CA	Analog Input Channel
0	0	0	0	0	AN0
	0	0	0	1	AN1
	0	0	1	0	AN2
	0	0	1	1	AN3
	0	1	0	0	AN4
	0	1	0	1	AN5
	0	1	1	0	AN6
	0	1	1	1	AN7
	1	0	0	0	AN8
	1	0	0	1	AN9
	1	0	1	0	AN9
	1	0	1	1	AN9
	1	1	0	0	AN9
	1	1	0	1	AN9
	1	1	1	0	AN9
	1	1	1	1	AN9
1	0	0	0	0	Reserved
	0	0	0	1	SPECIAL17
	0	0	1	X	Reserved
	0	1	0	0	V_{RH}
	0	1	0	1	V_{RL}
	0	1	1	0	$(V_{RH}+V_{RL}) / 2$
	0	1	1	1	Reserved
	1	X	X	X	Reserved

9.3.2.7 ATD Status Register 0 (ATDSTAT0)

This register contains the Sequence Complete Flag, overrun flags for external trigger and FIFO mode, and the conversion counter.

Module Base + 0x0006

	7	6	5	4	3	2	1	0
R	SCF	0	ETORF	FIFOR	CC3	CC2	CC1	CC0
W								
Reset	0	0	0	0	0	0	0	0

= Unimplemented or Reserved

Figure 9-9. ATD Status Register 0 (ATDSTAT0)

Read: Anytime

Write: Anytime (No effect on (CC3, CC2, CC1, CC0))

Table 9-16. ATDSTAT0 Field Descriptions

Field	Description
7 SCF	**Sequence Complete Flag** — This flag is set upon completion of a conversion sequence. If conversion sequences are continuously performed (SCAN=1), the flag is set after each one is completed. This flag is cleared when one of the following occurs: A) Write “1” to SCF B) Write to ATDCTL5 (a new conversion sequence is started) C) If AFFC=1 and read of a result register 0 Conversion sequence not completed 1 Conversion sequence has completed
5 ETORF	**External Trigger Overrun Flag** — While in edge trigger mode (ETRIGLE=0), if additional active edges are detected while a conversion sequence is in process the overrun flag is set. This flag is cleared when one of the following occurs: A) Write “1” to ETORF B) Write to ATDCTL0,1,2,3,4, ATDCMPE or ATDCMPHT (a conversion sequence is aborted) C) Write to ATDCTL5 (a new conversion sequence is started) 0 No External trigger over run error has occurred 1 External trigger over run error has occurred
4 FIFOR	**Result Register Over Run Flag** — This bit indicates that a result register has been written to before its associated conversion complete flag (CCF) has been cleared. This flag is most useful when using the FIFO mode because the flag potentially indicates that result registers are out of sync with the input channels. However, it is also practical for non-FIFO modes, and indicates that a result register has been over written before it has been read (i.e. the old data has been lost). This flag is cleared when one of the following occurs: A) Write “1” to FIFOR B) Write to ATDCTL0,1,2,3,4, ATDCMPE or ATDCMPHT (a conversion sequence is aborted) C) Write to ATDCTL5 (a new conversion sequence is started) 0 No over run has occurred 1 Overrun condition exists (result register has been written while associated CCFx flag was still set)
3–0 CC[3:0]	**Conversion Counter** — These 4 read-only bits are the binary value of the conversion counter. The conversion counter points to the result register that will receive the result of the current conversion. E.g. CC3=0, CC2=1, CC1=1, CC0=0 indicates that the result of the current conversion will be in ATD Result Register 6. If in non-FIFO mode (FIFO=0) the conversion counter is initialized to zero at the begin and end of the conversion sequence. If in FIFO mode (FIFO=1) the register counter is not initialized. The conversion counters wraps around when its maximum value is reached. Aborting a conversion or starting a new conversion clears the conversion counter even if FIFO=1.

9.3.2.8 ATD Compare Enable Register (ATDCMPE)

Writes to this register will abort current conversion sequence.

Read: Anytime

Write: Anytime

Module Base + 0x0008

	15	14	13	12	11	10	9	8	7	6	5	4	3	2	1	0
R	0	0	0	0	0	0	CMPE[9:0]									
W																
Reset	0	0	0	0	0	0	0	0	0	0	0	0	0	0	0	0

= Unimplemented or Reserved

Figure 9-10. ATD Compare Enable Register (ATDCMPE)

Table 9-17. ATDCMPE Field Descriptions

Field	Description
9–0 CMPE[9:0]	**Compare Enable for Conversion Number *n* (*n*= 9, 8, 7, 6, 5, 4, 3, 2, 1, 0) of a Sequence (*n conversion number, NOT channel number!)*** — These bits enable automatic compare of conversion results individually for conversions of a sequence. The sense of each comparison is determined by the CMPHT[*n*] bit in the ATDCMPHT register. For each conversion number with CMPE[*n*]=1 do the following: 1) Write compare value to ATDDR*n* result register 2) Write compare operator with CMPHT[*n*] in ATDCPMHT register CCF[*n*] in ATDSTAT2 register will flag individual success of any comparison. 0 No automatic compare 1 Automatic compare of results for conversion *n* of a sequence is enabled.

9.3.2.9 ATD Status Register 2 (ATDSTAT2)

This read-only register contains the Conversion Complete Flags CCF[9:0].

Module Base + 0x000A

	15	14	13	12	11	10	9	8	7	6	5	4	3	2	1	0
R	0	0	0	0	0	0	CCF[9:0]									
W																
Reset	0	0	0	0	0	0	0	0	0	0	0	0	0	0	0	0

= Unimplemented or Reserved

Figure 9-11. ATD Status Register 2 (ATDSTAT2)

Read: Anytime

Write: Anytime, no effect

Table 9-18. ATDSTAT2 Field Descriptions

Field	Description
9–0 CCF[9:0]	**Conversion Complete Flag *n* (*n*= 9, 8, 7, 6, 5, 4, 3, 2, 1, 0) (*n conversion number, NOT channel number!)***— A conversion complete flag is set at the end of each conversion in a sequence. The flags are associated with the conversion position in a sequence (and also the result register number). Therefore in non-fifo mode, CCF[8] is set when the ninth conversion in a sequence is complete and the result is available in result register ATDDR8; CCF[9] is set when the tenth conversion in a sequence is complete and the result is available in ATDDR9, and so forth. If automatic compare of conversion results is enabled (CMPE[*n*]=1 in ATDCMPE), the conversion complete flag is only set if comparison with ATDDR*n* is true and if ACMPIE=1 a compare interrupt will be requested. In this case, as the ATDDR*n* result register is used to hold the compare value, the result will not be stored there at the end of the conversion but is lost. A flag CCF[*n*] is cleared when one of the following occurs: A) Write to ATDCTL5 (a new conversion sequence is started) B) If AFFC=0, write “1” to CCF[*n*] C) If AFFC=1 and CMPE[*n*]=0, read of result register ATDDR*n* D) If AFFC=1 and CMPE[*n*]=1, write to result register ATDDR*n* In case of a concurrent set and clear on CCF[*n*]: The clearing by method A) will overwrite the set. The clearing by methods B) or C) or D) will be overwritten by the set. 0 Conversion number *n* not completed or successfully compared 1 If (CMPE[*n*]=0): Conversion number *n* has completed. Result is ready in ATDDR*n*. If (CMPE[*n*]=1): Compare for conversion result number *n* with compare value in ATDDR*n*, using compare operator CMPHT[*n*] is true. (No result available in ATDDR*n*)

9.3.2.10 ATD Input Enable Register (ATDDIEN)

Module Base + 0x000C

	15	14	13	12	11	10	9	8	7	6	5	4	3	2	1	0
R	0	0	0	0	0	0	IEN[9:0]									
W																
Reset	0	0	0	0	0	0	0	0	0	0	0	0	0	0	0	0

= Unimplemented or Reserved

Figure 9-12. ATD Input Enable Register (ATDDIEN)

Read: Anytime

Write: Anytime

Table 9-19. ATDDIEN Field Descriptions

Field	Description
9–0 IEN[9:0]	**ATD Digital Input Enable on channel *x* (*x*= 9, 8, 7, 6, 5, 4, 3, 2, 1, 0)** — This bit controls the digital input buffer from the analog input pin (AN*x*) to the digital data register. 0 Disable digital input buffer to AN*x* pin 1 Enable digital input buffer on AN*x* pin. **Note:** Setting this bit will enable the corresponding digital input buffer continuously. If this bit is set while simultaneously using it as an analog port, there is potentially increased power consumption because the digital input buffer maybe in the linear region.

9.3.2.11 ATD Compare Higher Than Register (ATDCMPHT)

Writes to this register will abort current conversion sequence.

Read: Anytime

Write: Anytime

Module Base + 0x000E

	15	14	13	12	11	10	9	8	7	6	5	4	3	2	1	0
R	0	0	0	0	0	0	CMPHT[9:0]									
W																
Reset	0	0	0	0	0	0	0	0	0	0	0	0	0	0	0	0

= Unimplemented or Reserved

Figure 9-13. ATD Compare Higher Than Register (ATDCMPHT)

Table 9-20. ATDCMPHT Field Descriptions

Field	Description
9–0 CMPHT[9:0]	**Compare Operation Higher Than Enable for conversion number *n* (*n*= 9, 8, 7, 6, 5, 4, 3, 2, 1, 0) of a Sequence (*n conversion number, NOT channel number!)*** — This bit selects the operator for comparison of conversion results. 0 If result of conversion *n* is **lower or same than** compare value in ATDDR*n*, this is flagged in ATDSTAT2 1 If result of conversion *n* is **higher than** compare value in ATDDR*n*, this is flagged in ATDSTAT2

9.3.2.12 ATD Conversion Result Registers (ATDDR*n*)

The A/D conversion results are stored in 10 result registers. Results are always in unsigned data representation. Left and right justification is selected using the DJM control bit in ATDCTL3.

If automatic compare of conversions results is enabled (CMPE[*n*]=1 in ATDCMPE), these registers must be written with the compare values in left or right justified format depending on the actual value of the DJM bit. In this case, as the ATDDR*n* register is used to hold the compare value, the result will not be stored there at the end of the conversion but is lost.

Attention, n is the conversion number, NOT the channel number!

Read: Anytime

Write: Anytime

NOTE

For conversions not using automatic compare, results are stored in the result registers after each conversion. In this case avoid writing to ATDDRn except for initial values, because an A/D result might be overwritten.

9.3.2.12.1 Left Justified Result Data (DJM=0)

Module Base +
0x0010 = ATDDR0, 0x0012 = ATDDR1, 0x0014 = ATDDR2, 0x0016 = ATDDR3
0x0018 = ATDDR4, 0x001A = ATDDR5, 0x001C = ATDDR6, 0x001E = ATDDR7
0x0020 = ATDDR8, 0x0022 = ATDDR9

	15	14	13	12	11	10	9	8	7	6	5	4	3	2	1	0
R	Bit 11	Bit 10	Bit 9	Bit 8	Bit 7	Bit 6	Bit 5	Bit 4	Bit 3	Bit 2	Bit 1	Bit 0	0	0	0	0
W																
Reset	0	0	0	0	0	0	0	0	0	0	0	0	0	0	0	0

= Unimplemented or Reserved

Figure 9-14. Left justified ATD conversion result register (ATDDR*n*)

9.3.2.12.2 Right Justified Result Data (DJM=1)

Module Base +
0x0010 = ATDDR0, 0x0012 = ATDDR1, 0x0014 = ATDDR2, 0x0016 = ATDDR3
0x0018 = ATDDR4, 0x001A = ATDDR5, 0x001C = ATDDR6, 0x001E = ATDDR7
0x0020 = ATDDR8, 0x0022 = ATDDR9

	15	14	13	12	11	10	9	8	7	6	5	4	3	2	1	0
R	0	0	0	0	Bit 11	Bit 10	Bit 9	Bit 8	Bit 7	Bit 6	Bit 5	Bit 4	Bit 3	Bit 2	Bi1 1	Bit 0
W																
Reset	0	0	0	0	0	0	0	0	0	0	0	0	0	0	0	0

= Unimplemented or Reserved

Figure 9-15. Right justified ATD conversion result register (ATDDR*n*)

Table 9-21 shows how depending on the A/D resolution the conversion result is transferred to the ATD result registers. Compare is always done using all 12 bits of both the conversion result and the compare value in ATDDRn.

Table 9-21. Conversion result mapping to ATDDRn

A/D resolution	DJM	conversion result mapping to ATDDR*n*
8-bit data	0	Bit[11:4] = result, Bit[3:0]=0000
8-bit data	1	Bit[7:0] = result, Bit[11:8]=0000
10-bit data	0	Bit[11:2] = result, Bit[1:0]=00
10-bit data	1	Bit[9:0] = result, Bit[11:10]=00
12-bit data	X	Bit[11:0] = result

9.4 Functional Description

The ADC12B10C is structured into an analog sub-block and a digital sub-block.

9.4.1 Analog Sub-Block

The analog sub-block contains all analog electronics required to perform a single conversion. Separate power supplies V_{DDA} and V_{SSA} allow to isolate noise of other MCU circuitry from the analog sub-block.

9.4.1.1 Sample and Hold Machine

The Sample and Hold (S/H) Machine accepts analog signals from the external world and stores them as capacitor charge on a storage node.

During the sample process the analog input connects directly to the storage node.

The input analog signals are unipolar and must fall within the potential range of V_{SSA} to V_{DDA}.

During the hold process the analog input is disconnected from the storage node.

9.4.1.2 Analog Input Multiplexer

The analog input multiplexer connects one of the 10 external analog input channels to the sample and hold machine.

9.4.1.3 Analog-to-Digital (A/D) Machine

The A/D Machine performs analog to digital conversions. The resolution is program selectable at either 8 or 10 or 12 bits. The A/D machine uses a successive approximation architecture. It functions by comparing the stored analog sample potential with a series of digitally generated analog potentials. By following a binary search algorithm, the A/D machine locates the approximating potential that is nearest to the sampled potential.

When not converting the A/D machine is automatically powered down.

Only analog input signals within the potential range of V_{RL} to V_{RH} (A/D reference potentials) will result in a non-railed digital output code.

9.4.2 Digital Sub-Block

This subsection explains some of the digital features in more detail. See Section 9.3.2, “Register Descriptions” for all details.

9.4.2.1 External Trigger Input

The external trigger feature allows the user to synchronize ATD conversions to the external environment events rather than relying on software to signal the ATD module when ATD conversions are to take place. The external trigger signal (out of reset ATD channel 9, configurable in ATDCTL1) is programmable to

be edge or level sensitive with polarity control. Table 9-22 gives a brief description of the different combinations of control bits and their effect on the external trigger function.

Table 9-22. External Trigger Control Bits

ETRIGLE	ETRIGP	ETRIGE	SCAN	Description
X	X	0	0	Ignores external trigger. Performs one conversion sequence and stops.
X	X	0	1	Ignores external trigger. Performs continuous conversion sequences.
0	0	1	X	Falling edge triggered. Performs one conversion sequence per trigger.
0	1	1	X	Rising edge triggered. Performs one conversion sequence per trigger.
1	0	1	X	Trigger active low. Performs continuous conversions while trigger is active.
1	1	1	X	Trigger active high. Performs continuous conversions while trigger is active.

During a conversion, if additional active edges are detected the overrun error flag ETORF is set.

In either level or edge triggered modes, the first conversion begins when the trigger is received.

Once ETRIGE is enabled, conversions cannot be started by a write to ATDCTL5, but rather must be triggered externally.

If the level mode is active and the external trigger both de-asserts and re-asserts itself during a conversion sequence, this does not constitute an overrun. Therefore, the flag is not set. If the trigger is left asserted in level mode while a sequence is completing, another sequence will be triggered immediately.

9.4.2.2 General-Purpose Digital Port Operation

The input channel pins can be multiplexed between analog and digital data. As analog inputs, they are multiplexed and sampled as analog channels to the A/D converter. The analog/digital multiplex operation is performed in the input pads. The input pad is always connected to the analog input channels of the ADC12B10C. The input pad signal is buffered to the digital port registers. This buffer can be turned on or off with the ATDDIEN register. This is important so that the buffer does not draw excess current when analog potentials are presented at its input.

9.5 Resets

At reset the ADC12B10C is in a power down state. The reset state of each individual bit is listed within the Register Description section (see Section 9.3.2, “Register Descriptions”) which details the registers and their bit-field.

9.6 Interrupts

The interrupts requested by the ADC12B10C are listed in Table 9-23. Refer to MCU specification for related vector address and priority.

Table 9-23. ATD Interrupt Vectors

Interrupt Source	CCR Mask	Local Enable
Sequence Complete Interrupt	I bit	ASCIE in ATDCTL2
Compare Interrupt	I bit	ACMPIE in ATDCTL2

See Section 9.3.2, “Register Descriptions” for further details.

Chapter 10
Pulse-Width Modulator (PMW8B6CV1) Block Description

10.1 Introduction

The pulse width modulation (PWM) definition is based on the HC12 PWM definitions. The PMW8B6CV1 module contains the basic features from the HC11 with some of the enhancements incorporated on the HC12, that is center aligned output mode and four available clock sources. The PMW8B6CV1 module has six channels with independent control of left and center aligned outputs on each channel.

Each of the six PWM channels has a programmable period and duty cycle as well as a dedicated counter. A flexible clock select scheme allows a total of four different clock sources to be used with the counters. Each of the modulators can create independent continuous waveforms with software-selectable duty rates from 0% to 100%. The PWM outputs can be programmed as left aligned outputs or center aligned outputs

10.1.1 Features

- Six independent PWM channels with programmable period and duty cycle
- Dedicated counter for each PWM channel
- Programmable PWM enable/disable for each channel
- Software selection of PWM duty pulse polarity for each channel
- Period and duty cycle are double buffered. Change takes effect when the end of the effective period is reached (PWM counter reaches 0) or when the channel is disabled.
- Programmable center or left aligned outputs on individual channels
- Six 8-bit channel or three 16-bit channel PWM resolution
- Four clock sources (A, B, SA, and SB) provide for a wide range of frequencies.
- Programmable clock select logic
- Emergency shutdown

10.1.2 Modes of Operation

There is a software programmable option for low power consumption in wait mode that disables the input clock to the prescaler.

In freeze mode there is a software programmable option to disable the input clock to the prescaler. This is useful for emulation.

10.1.3 Block Diagram

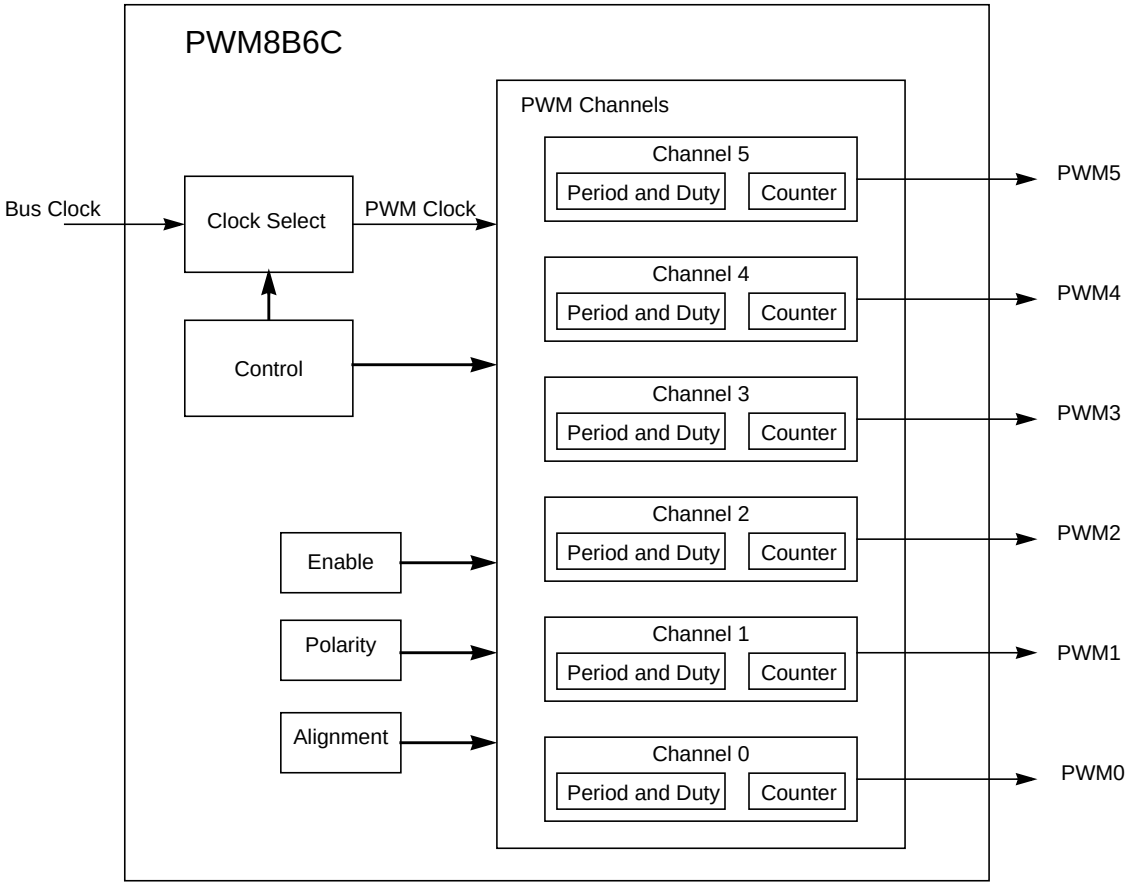

Figure 10-1. PMW8B6CV1 Block Diagram

10.2 External Signal Description

The PMW8B6CV1 module has a total of six external pins.

10.2.1 PWM5 — Pulse Width Modulator Channel 5 Pin

This pin serves as waveform output of PWM channel 5 and as an input for the emergency shutdown feature.

10.2.2 PWM4 — Pulse Width Modulator Channel 4 Pin

This pin serves as waveform output of PWM channel 4.

10.2.3 PWM3 — Pulse Width Modulator Channel 3 Pin

This pin serves as waveform output of PWM channel 3.

10.2.4 PWM2 — Pulse Width Modulator Channel 2 Pin

This pin serves as waveform output of PWM channel 2.

10.2.5 PWM1 — Pulse Width Modulator Channel 1 Pin

This pin serves as waveform output of PWM channel 1.

10.2.6 PWM0 — Pulse Width Modulator Channel 0 Pin

This pin serves as waveform output of PWM channel 0.

10.3 Memory Map and Register Definition

This subsection describes in detail all the registers and register bits in the PMW8B6CV1 module.

The special-purpose registers and register bit functions that would not normally be made available to device end users, such as factory test control registers and reserved registers are clearly identified by means of shading the appropriate portions of address maps and register diagrams. Notes explaining the reasons for restricting access to the registers and functions are also explained in the individual register descriptions.

10.3.1 Module Memory Map

The following paragraphs describe the content of the registers in the PMW8B6CV1 module. The base address of the PMW8B6CV1 module is determined at the MCU level when the MCU is defined. The register decode map is fixed and begins at the first address of the module address offset. Table 10-1 shows the registers associated with the PWM and their relative offset from the base address. The register detail description follows the order in which they appear in the register map.

Reserved bits within a register will always read as 0 and the write will be unimplemented. Unimplemented functions are indicated by shading the bit.

Table 10-1 shows the memory map for the PMW8B6CV1 module.

NOTE

Register address = base address + address offset, where the base address is defined at the MCU level and the address offset is defined at the module level.

Table 10-1. PMW8B6CV1 Memory Map

Address Offset	Register	Access
0x0000	PWM Enable Register (PWME)	R/W
0x0001	PWM Polarity Register (PWMPOL)	R/W
0x0002	PWM Clock Select Register (PWMCLK)	R/W
0x0003	PWM Prescale Clock Select Register (PWMPRCLK)	R/W
0x0004	PWM Center Align Enable Register (PWMCAE)	R/W

Table 10-1. PMW8B6CV1 Memory Map

0x0005	PWM Control Register (PWMCTL)	R/W
0x0006	PWM Test Register (PWMTST)(1)	R/W
0x0007	PWM Prescale Counter Register (PWMPRSC)(2)	R/W
0x0008	PWM Scale A Register (PWMSCLA)	R/W
0x0009	PWM Scale B Register (PWMSCLB)	R/W
0x000A	PWM Scale A Counter Register (PWMSCNTA)(3)	R/W
0x000B	PWM Scale B Counter Register (PWMSCNTB)(4)	R/W
0x000C	PWM Channel 0 Counter Register (PWMCNT0)	R/W
0x000D	PWM Channel 1 Counter Register (PWMCNT1)	R/W
0x000E	PWM Channel 2 Counter Register (PWMCNT2)	R/W
0x000F	PWM Channel 3 Counter Register (PWMCNT3)	R/W
0x0010	PWM Channel 4 Counter Register (PWMCNT4)	R/W
0x0011	PWM Channel 5 Counter Register (PWMCNT5)	R/W
0x0012	PWM Channel 0 Period Register (PWMPER0)	R/W
0x0013	PWM Channel 1 Period Register (PWMPER1)	R/W
0x0014	PWM Channel 2 Period Register (PWMPER2)	R/W
0x0015	PWM Channel 3 Period Register (PWMPER3)	R/W
0x0016	PWM Channel 4 Period Register (PWMPER4)	R/W
0x0017	PWM Channel 5 Period Register (PWMPER5)	R/W
0x0018	PWM Channel 0 Duty Register (PWMDTY0)	R/W
0x0019	PWM Channel 1 Duty Register (PWMDTY1)	R/W
0x001A	PWM Channel 2 Duty Register (PWMDTY2)	R/W
0x001B	PWM Channel 3 Duty Register (PWMDTY3)	R/W
0x001C	PWM Channel 4 Duty Register (PWMDTY4)	R/W
0x001D	PWM Channel 5 Duty Register (PWMDTY5)	R/W
0x001E	PWM Shutdown Register (PWMSDN)	R/W

1. PWMTST is intended for factory test purposes only.
2. PWMPRSC is intended for factory test purposes only.
3. PWMSCNTA is intended for factory test purposes only.
4. PWMSCNTB is intended for factory test purposes only.

10.3.2 Register Descriptions

The following paragraphs describe in detail all the registers and register bits in the PMW8B6CV1 module.

Register Name		Bit 7	6	5	4	3	2	1	Bit 0
0x0000 PWME	R	0	0	PWME5	PWME4	PWME3	PWME2	PWME1	PWME0
	W								
0x0001 PWMPOL	R	0	0	PPOL5	PPOL4	PPOL3	PPOL2	PPOL1	PPOL0
	W								
0x0002 PWMCLK	R	0	0	PCLK5	PCLK4	PCLK3	PCLK2	PCLK1	PCLK0
	W								
0x0003 PWMPRCLK	R	0	PCKB2	PCKB1	PCKB0	0	PCKA2	PCKA1	PCKA0
	W								
0x0004 PWMCAE	R	0	0	CAE5	CAE4	CAE2	CAE2	CAE1	CAE0
	W								
0x0005 PWMCTL	R	0	CON45	CON23	CON01	PSWAI	PFRZ	0	0
	W								
0x0006 PWMTST	R	0	0	0	0	0	0	0	0
	W								
0x0007 PWMPRSC	R	0	0	0	0	0	0	0	0
	W								
0x0008 PWMSCLA	R	Bit 7	6	5	4	3	2	1	Bit 0
	W								
0x0009 PWMSCLB	R	Bit 7	6	5	4	3	2	1	Bit 0
	W								
0x000A PWMSCNTA	R	0	0	0	0	0	0	0	0
	W								
0x000B PWMSCNTB	R	0	0	0	0	0	0	0	0
	W								
0x000C PWMCNT0	R	Bit 7	6	5	4	3	2	1	Bit 0
	W	0	0	0	0	0	0	0	0
0x000D PWMCNT1	R	Bit 7	6	5	4	3	2	1	Bit 0
	W	0	0	0	0	0	0	0	0
0x000E PWMCNT2	R	Bit 7	6	5	4	3	2	1	Bit 0
	W	0	0	0	0	0	0	0	0
0x000F PWMCNT3	R	Bit 7	6	5	4	3	2	1	Bit 0
	W	0	0	0	0	0	0	0	0

= Unimplemented or Reserved

Figure 10-2. PWM Register Summary

Register Name		Bit 7	6	5	4	3	2	1	Bit 0
0x0010 PWMCNT4	R	Bit 7	6	5	4	3	2	1	Bit 0
	W	0	0	0	0	0	0	0	0
0x0011 PWMCNT5	R	Bit 7	6	5	4	3	2	1	Bit 0
	W	0	0	0	0	0	0	0	0
0x0012 PWMPER0	R W	Bit 7	6	5	4	3	2	1	Bit 0
0x0013 PWMPER1	R W	Bit 7	6	5	4	3	2	1	Bit 0
0x0014 PWMPER2	R W	Bit 7	6	5	4	3	2	1	Bit 0
0x0015 PWMPER3	R W	Bit 7	6	5	4	3	2	1	Bit 0
0x0016 PWMPER4	R W	Bit 7	6	5	4	3	2	1	Bit 0
0x0017 PWMPER5	R W	Bit 7	6	5	4	3	2	1	Bit 0
0x0018 PWMDTY0	R W	Bit 7	6	5	4	3	2	1	Bit 0
0x0019 PWMPER1	R W	Bit 7	6	5	4	3	2	1	Bit 0
0x001A PWMPER2	R W	Bit 7	6	5	4	3	2	1	Bit 0
0x001B PWMPER3	R W	Bit 7	6	5	4	3	2	1	Bit 0
0x001C PWMPER4	R W	Bit 7	6	5	4	3	2	1	Bit 0
0x001D PWMPER5	R W	Bit 7	6	5	4	3	2	1	Bit 0
0x001E PWMSDB	R	PWMIF	PWMIE	0	PWMLVL	0	PWM5IN	PWM5INL	PWM5ENA
	W			PWMRSTRT					

= Unimplemented or Reserved

Figure 10-2. PWM Register Summary (continued)

10.3.2.1 PWM Enable Register (PWME)

Each PWM channel has an enable bit (PWMEx) to start its waveform output. When any of the PWMEx bits are set (PWMEx = 1), the associated PWM output is enabled immediately. However, the actual PWM waveform is not available on the associated PWM output until its clock source begins its next cycle due to the synchronization of PWMEx and the clock source.

NOTE

The first PWM cycle after enabling the channel can be irregular.

An exception to this is when channels are concatenated. After concatenated mode is enabled (CONxx bits set in PWMCTL register), enabling/disabling the corresponding 16-bit PWM channel is controlled by the low-order PWMEx bit. In this case, the high-order bytes PWMEx bits have no effect and their corresponding PWM output lines are disabled.

While in run mode, if all six PWM channels are disabled (PWME5–PWME0 = 0), the prescaler counter shuts off for power savings.

Module Base + 0x0000

	7	6	5	4	3	2	1	0
R	0	0	PWME5	PWME4	PWME3	PWME2	PWME1	PWME0
W								
Reset	0	0	0	0	0	0	0	0

= Unimplemented or Reserved

Figure 10-3. PWM Enable Register (PWME)

Read: anytime

Write: anytime

Table 10-2. PWME Field Descriptions

Field	Description
5 PWME5	**Pulse Width Channel 5 Enable** 0 Pulse width channel 5 is disabled. 1 Pulse width channel 5 is enabled. The pulse modulated signal becomes available at PWM,output bit 5 when its clock source begins its next cycle.
4 PWME4	**Pulse Width Channel 4 Enable** 0 Pulse width channel 4 is disabled. 1 Pulse width channel 4 is enabled. The pulse modulated signal becomes available at PWM, output bit 4 when its clock source begins its next cycle. If CON45 = 1, then bit has no effect and PWM output line 4 is disabled.
3 PWME3	**Pulse Width Channel 3 Enable** 0 Pulse width channel 3 is disabled. 1 Pulse width channel 3 is enabled. The pulse modulated signal becomes available at PWM, output bit 3 when its clock source begins its next cycle.
2 PWME2	**Pulse Width Channel 2 Enable** 0 Pulse width channel 2 is disabled. 1 Pulse width channel 2 is enabled. The pulse modulated signal becomes available at PWM, output bit 2 when its clock source begins its next cycle. If CON23 = 1, then bit has no effect and PWM output line 2 is disabled.

Table 10-2. PWME Field Descriptions (continued)

Field	Description
1 PWME1	**Pulse Width Channel 1 Enable** 0 Pulse width channel 1 is disabled. 1 Pulse width channel 1 is enabled. The pulse modulated signal becomes available at PWM, output bit 1 when its clock source begins its next cycle.
0 PWME0	**Pulse Width Channel 0 Enable** 0 Pulse width channel 0 is disabled. 1 Pulse width channel 0 is enabled. The pulse modulated signal becomes available at PWM, output bit 0 when its clock source begins its next cycle. If CON01 = 1, then bit has no effect and PWM output line 0 is disabled.

10.3.2.2 PWM Polarity Register (PWMPOL)

The starting polarity of each PWM channel waveform is determined by the associated PPOLx bit in the PWMPOL register. If the polarity bit is 1, the PWM channel output is high at the beginning of the cycle and then goes low when the duty count is reached. Conversely, if the polarity bit is 0 the output starts low and then goes high when the duty count is reached.

Module Base + 0x0001

	7	6	5	4	3	2	1	0
R	0	0	PPOL5	PPOL4	PPOL3	PPOL2	PPOL1	PPOL0
W								
Reset	0	0	0	0	0	0	0	0

= Unimplemented or Reserved

Figure 10-4. PWM Polarity Register (PWMPOL)

Read: anytime

Write: anytime

NOTE

PPOLx register bits can be written anytime. If the polarity is changed while a PWM signal is being generated, a truncated or stretched pulse can occur during the transition

Table 10-3. PWMPOL Field Descriptions

Field	Description
5 PPOL5	**Pulse Width Channel 5 Polarity** 0 PWM channel 5 output is low at the beginning of the period, then goes high when the duty count is reached. 1 PWM channel 5 output is high at the beginning of the period, then goes low when the duty count is reached.
4 PPOL4	**Pulse Width Channel 4 Polarity** 0 PWM channel 4 output is low at the beginning of the period, then goes high when the duty count is reached. 1 PWM channel 4 output is high at the beginning of the period, then goes low when the duty count is reached.

Table 10-3. PWMPOL Field Descriptions (continued)

Field	Description
3 PPOL3	**Pulse Width Channel 3 Polarity** 0 PWM channel 3 output is low at the beginning of the period, then goes high when the duty count is reached. 1 PWM channel 3 output is high at the beginning of the period, then goes low when the duty count is reached.
2 PPOL2	**Pulse Width Channel 2 Polarity** 0 PWM channel 2 output is low at the beginning of the period, then goes high when the duty count is reached. 1 PWM channel 2 output is high at the beginning of the period, then goes low when the duty count is reached.
1 PPOL1	**Pulse Width Channel 1 Polarity** 0 PWM channel 1 output is low at the beginning of the period, then goes high when the duty count is reached. 1 PWM channel 1 output is high at the beginning of the period, then goes low when the duty count is reached.
0 PPOL0	**Pulse Width Channel 0 Polarity** 0 PWM channel 0 output is low at the beginning of the period, then goes high when the duty count is reached 1 PWM channel 0 output is high at the beginning of the period, then goes low when the duty count is reached.

10.3.2.3 PWM Clock Select Register (PWMCLK)

Each PWM channel has a choice of two clocks to use as the clock source for that channel as described below.

Module Base + 0x0002

	7	6	5	4	3	2	1	0
R	0	0	PCLK5	PCLK4	PCLK3	PCLK2	PCLK1	PCLK0
W								
Reset	0	0	0	0	0	0	0	0

= Unimplemented or Reserved

Figure 10-5. PWM Clock Select Register (PWMCLK)

Read: anytime

Write: anytime

NOTE

Register bits PCLK0 to PCLK5 can be written anytime. If a clock select is changed while a PWM signal is being generated, a truncated or stretched pulse can occur during the transition.

Table 10-4. PWMCLK Field Descriptions

Field	Description
5 PCLK5	**Pulse Width Channel 5 Clock Select** 0 Clock A is the clock source for PWM channel 5. 1 Clock SA is the clock source for PWM channel 5.
4 PCLK4	**Pulse Width Channel 4 Clock Select** 0 Clock A is the clock source for PWM channel 4. 1 Clock SA is the clock source for PWM channel 4.
3 PCLK3	**Pulse Width Channel 3 Clock Select** 0 Clock B is the clock source for PWM channel 3. 1 Clock SB is the clock source for PWM channel 3.
2 PCLK2	**Pulse Width Channel 2 Clock Select** 0 Clock B is the clock source for PWM channel 2. 1 Clock SB is the clock source for PWM channel 2.
1 PCLK1	**Pulse Width Channel 1 Clock Select** 0 Clock A is the clock source for PWM channel 1. 1 Clock SA is the clock source for PWM channel 1.
0 PCLK0	**Pulse Width Channel 0 Clock Select** 0 Clock A is the clock source for PWM channel 0. 1 Clock SA is the clock source for PWM channel 0.

10.3.2.4 PWM Prescale Clock Select Register (PWMPRCLK)

This register selects the prescale clock source for clocks A and B independently.

Module Base + 0x0003

	7	6	5	4	3	2	1	0
R	0	PCKB2	PCKB1	PCKB0	0	PCKA2	PCKA1	PCKA0
W								
Reset	0	0	0	0	0	0	0	0

= Unimplemented or Reserved

Figure 10-6. PWM Prescaler Clock Select Register (PWMPRCLK)

Read: anytime

Write: anytime

NOTE

PCKB2–PCKB0 and PCKA2–PCKA0 register bits can be written anytime. If the clock prescale is changed while a PWM signal is being generated, a truncated or stretched pulse can occur during the transition.

Table 10-5. PWMPRCLK Field Descriptions

Field	Description
6:5 PCKB[2:0]	**Prescaler Select for Clock B** — Clock B is 1 of two clock sources which can be used for channels 2 or 3. These three bits determine the rate of clock B, as shown in Table 10-6**.**
2:0 PCKA[2:0]	**Prescaler Select for Clock A** — Clock A is 1 of two clock sources which can be used for channels 0, 1, 4, or 5. These three bits determine the rate of clock A, as shown in Table 10-7.

Table 10-6. Clock B Prescaler Selects

PCKB2	PCKB1	PCKB0	Value of Clock B
0	0	0	Bus Clock
0	0	1	Bus Clock / 2
0	1	0	Bus Clock / 4
0	1	1	Bus Clock / 8
1	0	0	Bus Clock / 16
1	0	1	Bus Clock / 32
1	1	0	Bus Clock / 64
1	1	1	Bus Clock / 128

Table 10-7. Clock A Prescaler Selects

PCKA2	PCKA1	PCKA0	Value of Clock A
0	0	0	Bus Clock
0	0	1	Bus Clock / 2
0	1	0	Bus Clock / 4
0	1	1	Bus Clock / 8
1	0	0	Bus Clock / 16
1	0	1	Bus Clock / 32
1	1	0	Bus Clock / 64
1	1	1	Bus Clock / 128

10.3.2.5 PWM Center Align Enable Register (PWMCAE)

The PWMCAE register contains six control bits for the selection of center aligned outputs or left aligned outputs for each PWM channel. If the CAEx bit is set to a 1, the corresponding PWM output will be center aligned. If the CAEx bit is cleared, the corresponding PWM output will be left aligned. Reference Section 10.4.2.5, “Left Aligned Outputs,” and Section 10.4.2.6, “Center Aligned Outputs,” for a more detailed description of the PWM output modes.

Module Base + 0x0004

	7	6	5	4	3	2	1	0
R	0	0	CAE5	CAE4	CAE3	CAE2	CAE1	CAE0
W								
Reset	0	0	0	0	0	0	0	0

= Unimplemented or Reserved

Figure 10-7. PWM Center Align Enable Register (PWMCAE)

Read: anytime

Write: anytime

NOTE

Write these bits only when the corresponding channel is disabled.

Table 10-8. PWMCAE Field Descriptions

Field	Description
5 CAE5	**Center Aligned Output Mode on Channel 5** 0 Channel 5 operates in left aligned output mode. 1 Channel 5 operates in center aligned output mode.
4 CAE4	**Center Aligned Output Mode on Channel 4** 0 Channel 4 operates in left aligned output mode. 1 Channel 4 operates in center aligned output mode.
3 CAE3	**Center Aligned Output Mode on Channel 3** 1 Channel 3 operates in left aligned output mode. 1 Channel 3 operates in center aligned output mode.
2 CAE2	**Center Aligned Output Mode on Channel 2** 0 Channel 2 operates in left aligned output mode. 1 Channel 2 operates in center aligned output mode.
1 CAE1	**Center Aligned Output Mode on Channel 1** 0 Channel 1 operates in left aligned output mode. 1 Channel 1 operates in center aligned output mode.
0 CAE0	**Center Aligned Output Mode on Channel 0** 0 Channel 0 operates in left aligned output mode. 1 Channel 0 operates in center aligned output mode.

10.3.2.6 PWM Control Register (PWMCTL)

The PWMCTL register provides for various control of the PWM module.

Module Base + 0x0005

	7	6	5	4	3	2	1	0
R	0	CON45	CON23	CON01	PSWAI	PFRZ	0	0
W								
Reset	0	0	0	0	0	0	0	0

= Unimplemented or Reserved

Figure 10-8. PWM Control Register (PWMCTL)

Read: anytime

Write: anytime

There are three control bits for concatenation, each of which is used to concatenate a pair of PWM channels into one 16-bit channel. When channels 4 and 5 are concatenated, channel 4 registers become the high-order bytes of the double-byte channel. When channels 2 and 3 are concatenated, channel 2 registers become the high-order bytes of the double-byte channel. When channels 0 and 1 are concatenated, channel 0 registers become the high-order bytes of the double-byte channel.

Reference Section 10.4.2.7, “PWM 16-Bit Functions,” for a more detailed description of the concatenation PWM function.

NOTE

Change these bits only when both corresponding channels are disabled.

Table 10-9. PWMCTL Field Descriptions

Field	Description
6 CON45	**Concatenate Channels 4 and 5** 0 Channels 4 and 5 are separate 8-bit PWMs. 1 Channels 4 and 5 are concatenated to create one 16-bit PWM channel. Channel 4 becomes the high-order byte and channel 5 becomes the low-order byte. Channel 5 output pin is used as the output for this 16-bit PWM (bit 5 of port PWMP). Channel 5 clock select control bit determines the clock source, channel 5 polarity bit determines the polarity, channel 5 enable bit enables the output and channel 5 center aligned enable bit determines the output mode.
5 CON23	**Concatenate Channels 2 and 3** 0 Channels 2 and 3 are separate 8-bit PWMs. 1 Channels 2 and 3 are concatenated to create one 16-bit PWM channel. Channel 2 becomes the high-order byte and channel 3 becomes the low-order byte. Channel 3 output pin is used as the output for this 16-bit PWM (bit 3 of port PWMP). Channel 3 clock select control bit determines the clock source, channel 3 polarity bit determines the polarity, channel 3 enable bit enables the output and channel 3 center aligned enable bit determines the output mode.
4 CON01	**Concatenate Channels 0 and 1** 0 Channels 0 and 1 are separate 8-bit PWMs. 1 Channels 0 and 1 are concatenated to create one 16-bit PWM channel. Channel 0 becomes the high-order byte and channel 1 becomes the low-order byte. Channel 1 output pin is used as the output for this 16-bit PWM (bit 1 of port PWMP). Channel 1 clock select control bit determines the clock source, channel 1 polarity bit determines the polarity, channel 1 enable bit enables the output and channel 1 center aligned enable bit determines the output mode.
3 PSWAI	**PWM Stops in Wait Mode** — Enabling this bit allows for lower power consumption in wait mode by disabling the input clock to the prescaler. 0 Allow the clock to the prescaler to continue while in wait mode. 1 Stop the input clock to the prescaler whenever the MCU is in wait mode.
2 PFRZ	**PWM Counters Stop in Freeze Mode** — In freeze mode, there is an option to disable the input clock to the prescaler by setting the PFRZ bit in the PWMCTL register. If this bit is set, whenever the MCU is in freeze mode the input clock to the prescaler is disabled. This feature is useful during emulation as it allows the PWM function to be suspended. In this way, the counters of the PWM can be stopped while in freeze mode so that after normal program flow is continued, the counters are re-enabled to simulate real-time operations. Because the registers remain accessible in this mode, to re-enable the prescaler clock, either disable the PFRZ bit or exit freeze mode. 0 Allow PWM to continue while in freeze mode. 1 Disable PWM input clock to the prescaler whenever the part is in freeze mode. This is useful for emulation.

10.3.2.7 Reserved Register (PWMTST)

This register is reserved for factory testing of the PWM module and is not available in normal modes.

Module Base + 0x0006

	7	6	5	4	3	2	1	0
R	0	0	0	0	0	0	0	0
W								
Reset	0	0	0	0	0	0	0	0

= Unimplemented or Reserved

Figure 10-9. Reserved Register (PWMTST)

Read: always read 0x0000 in normal modes

Write: unimplemented in normal modes

NOTE

Writing to this register when in special modes can alter the PWM functionality.

10.3.2.8 Reserved Register (PWMPRSC)

This register is reserved for factory testing of the PWM module and is not available in normal modes.

Module Base + 0x0007

	7	6	5	4	3	2	1	0
R	0	0	0	0	0	0	0	0
W								
Reset	0	0	0	0	0	0	0	0

= Unimplemented or Reserved

Figure 10-10. Reserved Register (PWMPRSC)

Read: always read 0x0000 in normal modes

Write: unimplemented in normal modes

NOTE

Writing to this register when in special modes can alter the PWM functionality.

10.3.2.9 PWM Scale A Register (PWMSCLA)

PWMSCLA is the programmable scale value used in scaling clock A to generate clock SA. Clock SA is generated by taking clock A, dividing it by the value in the PWMSCLA register and dividing that by two.

Clock SA = Clock A / (2 * PWMSCLA)

NOTE

When PWMSCLA = 0x0000, PWMSCLA value is considered a full scale value of 256. Clock A is thus divided by 512.

Any value written to this register will cause the scale counter to load the new scale value (PWMSCLA).

Module Base + 0x0008

	7	6	5	4	3	2	1	0
R	Bit 7	6	5	4	3	2	1	Bit 0
W								
Reset	0	0	0	0	0	0	0	0

Figure 10-11. PWM Scale A Register (PWMSCLA)

Read: anytime

Write: anytime (causes the scale counter to load the PWMSCLA value)

10.3.2.10 PWM Scale B Register (PWMSCLB)

PWMSCLB is the programmable scale value used in scaling clock B to generate clock SB. Clock SB is generated by taking clock B, dividing it by the value in the PWMSCLB register and dividing that by two.

Clock SB = Clock B / (2 * PWMSCLB)

NOTE

When PWMSCLB = 0x0000, PWMSCLB value is considered a full scale value of 256. Clock B is thus divided by 512.

Any value written to this register will cause the scale counter to load the new scale value (PWMSCLB).

Module Base + 0x0009

	7	6	5	4	3	2	1	0
R W	Bit 7	6	5	4	3	2	1	Bit 0
Reset	0	0	0	0	0	0	0	0

Figure 10-12. PWM Scale B Register (PWMSCLB)

Read: anytime

Write: anytime (causes the scale counter to load the PWMSCLB value).

10.3.2.11 Reserved Registers (PWMSCNTx)

The registers PWMSCNTA and PWMSCNTB are reserved for factory testing of the PWM module and are not available in normal modes.

Module Base + 0x000A

	7	6	5	4	3	2	1	0
R	0	0	0	0	0	0	0	0
W								
Reset	0	0	0	0	0	0	0	0

= Unimplemented or Reserved

Figure 10-13. Reserved Register (PWMSCNTA)

Module Base + 0x000B

	7	6	5	4	3	2	1	0
R	0	0	0	0	0	0	0	0
W								
Reset	0	0	0	0	0	0	0	0

= Unimplemented or Reserved

Figure 10-14. Reserved Register (PWMSCNTB)

Read: always read 0x0000 in normal modes

Write: unimplemented in normal modes

NOTE

Writing to these registers when in special modes can alter the PWM functionality.

10.3.2.12 PWM Channel Counter Registers (PWMCNTx)

Each channel has a dedicated 8-bit up/down counter which runs at the rate of the selected clock source. The counter can be read at any time without affecting the count or the operation of the PWM channel. In left aligned output mode, the counter counts from 0 to the value in the period register – 1. In center aligned output mode, the counter counts from 0 up to the value in the period register and then back down to 0.

Any value written to the counter causes the counter to reset to 0x0000, the counter direction to be set to up, the immediate load of both duty and period registers with values from the buffers, and the output to change according to the polarity bit. The counter is also cleared at the end of the effective period (see Section 10.4.2.5, “Left Aligned Outputs,” and Section 10.4.2.6, “Center Aligned Outputs,” for more details). When the channel is disabled (PWMEx = 0), the PWMCNTx register does not count. When a channel becomes enabled (PWMEx = 1), the associated PWM counter starts at the count in the PWMCNTx register. For more detailed information on the operation of the counters, reference Section 10.4.2.4, “PWM Timer Counters.”

In concatenated mode, writes to the 16-bit counter by using a 16-bit access or writes to either the low- or high-order byte of the counter will reset the 16-bit counter. Reads of the 16-bit counter must be made by 16-bit access to maintain data coherency.

NOTE

Writing to the counter while the channel is enabled can cause an irregular PWM cycle to occur.

Module Base + 0x000C

	7	6	5	4	3	2	1	0
R	Bit 7	6	5	4	3	2	1	Bit 0
W	0	0	0	0	0	0	0	0
Reset	0	0	0	0	0	0	0	0

Figure 10-15. PWM Channel Counter Registers (PWMCNT0)

Module Base + 0x000D

	7	6	5	4	3	2	1	0
R	Bit 7	6	5	4	3	2	1	Bit 0
W	0	0	0	0	0	0	0	0
Reset	0	0	0	0	0	0	0	0

Figure 10-16. PWM Channel Counter Registers (PWMCNT1)

Module Base + 0x000E

	7	6	5	4	3	2	1	0
R	Bit 7	6	5	4	3	2	1	Bit 0
W	0	0	0	0	0	0	0	0
Reset	0	0	0	0	0	0	0	0

Figure 10-17. PWM Channel Counter Registers (PWMCNT2)

Module Base + 0x000F

	7	6	5	4	3	2	1	0
R	Bit 7	6	5	4	3	2	1	Bit 0
W	0	0	0	0	0	0	0	0
Reset	0	0	0	0	0	0	0	0

Figure 10-18. PWM Channel Counter Registers (PWMCNT3)

Module Base + 0x00010

	7	6	5	4	3	2	1	0
R	Bit 7	6	5	4	3	2	1	Bit 0
W	0	0	0	0	0	0	0	0
Reset	0	0	0	0	0	0	0	0

Figure 10-19. PWM Channel Counter Registers (PWMCNT4)

Module Base + 0x00011

	7	6	5	4	3	2	1	0
R	Bit 7	6	5	4	3	2	1	Bit 0
W	0	0	0	0	0	0	0	0
Reset	0	0	0	0	0	0	0	0

Figure 10-20. PWM Channel Counter Registers (PWMCNT5)

Read: anytime

Write: anytime (any value written causes PWM counter to be reset to 0x0000).

10.3.2.13 PWM Channel Period Registers (PWMPERx)

There is a dedicated period register for each channel. The value in this register determines the period of the associated PWM channel.

The period registers for each channel are double buffered so that if they change while the channel is enabled, the change will NOT take effect until one of the following occurs:

- The effective period ends
- The counter is written (counter resets to 0x0000)
- The channel is disabled

In this way, the output of the PWM will always be either the old waveform or the new waveform, not some variation in between. If the channel is not enabled, then writes to the period register will go directly to the latches as well as the buffer.

NOTE

Reads of this register return the most recent value written. Reads do not necessarily return the value of the currently active period due to the double buffering scheme.

Reference Section 10.4.2.3, “PWM Period and Duty,” for more information.

To calculate the output period, take the selected clock source period for the channel of interest (A, B, SA, or SB) and multiply it by the value in the period register for that channel:

- Left aligned output (CAEx = 0)
- PWMx period = channel clock period * PWMPERx center aligned output (CAEx = 1)
- PWMx period = channel clock period * (2 * PWMPERx)

For boundary case programming values, please refer to Section 10.4.2.8, “PWM Boundary Cases.”

Module Base + 0x0012

	7	6	5	4	3	2	1	0
R W	Bit 7	6	5	4	3	2	1	Bit 0
Reset	0	0	0	0	0	0	0	0

Figure 10-21. PWM Channel Period Registers (PWMPER0)

Module Base + 0x0013

	7	6	5	4	3	2	1	0
R W	Bit 7	6	5	4	3	2	1	Bit 0
Reset	0	0	0	0	0	0	0	0

Figure 10-22. PWM Channel Period Registers (PWMPER1)

Module Base + 0x0014

	7	6	5	4	3	2	1	0
R W	Bit 7	6	5	4	3	2	1	Bit 0
Reset	0	0	0	0	0	0	0	0

Figure 10-23. PWM Channel Period Registers (PWMPER2)

Module Base + 0x0015

	7	6	5	4	3	2	1	0
R W	Bit 7	6	5	4	3	2	1	Bit 0
Reset	0	0	0	0	0	0	0	0

Figure 10-24. PWM Channel Period Registers (PWMPER3)

Module Base + 0x0016

	7	6	5	4	3	2	1	0
R W	Bit 7	6	5	4	3	2	1	Bit 0
Reset	0	0	0	0	0	0	0	0

Figure 10-25. PWM Channel Period Registers (PWMPER4)

Module Base + 0x0017

	7	6	5	4	3	2	1	0
R W	Bit 7	6	5	4	3	2	1	Bit 0
Reset	0	0	0	0	0	0	0	0

Figure 10-26. PWM Channel Period Registers (PWMPER5)

Read: anytime

Write: anytime

10.3.2.14 PWM Channel Duty Registers (PWMDTYx)

There is a dedicated duty register for each channel. The value in this register determines the duty of the associated PWM channel. The duty value is compared to the counter and if it is equal to the counter value a match occurs and the output changes state.

The duty registers for each channel are double buffered so that if they change while the channel is enabled, the change will NOT take effect until one of the following occurs:

- The effective period ends
- The counter is written (counter resets to 0x0000)
- The channel is disabled

In this way, the output of the PWM will always be either the old duty waveform or the new duty waveform, not some variation in between. If the channel is not enabled, then writes to the duty register will go directly to the latches as well as the buffer.

NOTE

Reads of this register return the most recent value written. Reads do not necessarily return the value of the currently active duty due to the double buffering scheme.

Reference Section 10.4.2.3, “PWM Period and Duty,” for more information.

NOTE

Depending on the polarity bit, the duty registers will contain the count of either the high time or the low time. If the polarity bit is 1, the output starts high and then goes low when the duty count is reached, so the duty registers contain a count of the high time. If the polarity bit is 0, the output starts low and then goes high when the duty count is reached, so the duty registers contain a count of the low time.

To calculate the output duty cycle (high time as a % of period) for a particular channel:

- Polarity = 0 (PPOLx = 0)
  Duty cycle = [(PWMPERx PWMDTYx)/PWMPERx] * 100%
- Polarity = 1 (PPOLx = 1)
  Duty cycle = [PWMDTYx / PWMPERx] * 100%

- For boundary case programming values, please refer to Section 10.4.2.8, “PWM Boundary Cases.”

Module Base + 0x0018

	7	6	5	4	3	2	1	0
R W	Bit 7	6	5	4	3	2	1	Bit 0
Reset	1	1	1	1	1	1	1	1

Figure 10-27. PWM Channel Duty Registers (PWMDTY0)

Module Base + 0x0019

	7	6	5	4	3	2	1	0
R W	Bit 7	6	5	4	3	2	1	Bit 0
Reset	1	1	1	1	1	1	1	1

Figure 10-28. PWM Channel Duty Registers (PWMDTY1)

Module Base + 0x001A

	7	6	5	4	3	2	1	0
R W	Bit 7	6	5	4	3	2	1	Bit 0
Reset	1	1	1	1	1	1	1	1

Figure 10-29. PWM Channel Duty Registers (PWMDTY2)

Module Base + 0x001B

	7	6	5	4	3	2	1	0
R W	Bit 7	6	5	4	3	2	1	Bit 0
Reset	1	1	1	1	1	1	1	1

Figure 10-30. PWM Channel Duty Registers (PWMDTY3)

Module Base + 0x001C

	7	6	5	4	3	2	1	0
R W	Bit 7	6	5	4	3	2	1	Bit 0
Reset	1	1	1	1	1	1	1	1

Figure 10-31. PWM Channel Duty Registers (PWMDTY4)

Module Base + 0x001D

	7	6	5	4	3	2	1	0
R W	Bit 7	6	5	4	3	2	1	Bit 0
Reset	1	1	1	1	1	1	1	1

Figure 10-32. PWM Channel Duty Registers (PWMDTY5)

Read: anytime

Write: anytime

10.3.2.15 PWM Shutdown Register (PWMSDN)

The PWMSDN register provides for the shutdown functionality of the PWM module in the emergency cases.

Module Base + 0x00E

	7	6	5	4	3	2	1	0
R	PWMIF	PWMIE	0	PWMLVL	0	PWM5IN	PWM5INL	PWM5ENA
W			PWMRSTRT					
Reset	0	0	0	0	0	0	0	0

= Unimplemented or Reserved

Figure 10-33. PWM Shutdown Register (PWMSDN)

Read: anytime

Write: anytime

Table 10-10. PWMSDN Field Descriptions

Field	Description
7 PWMIF	**PWM Interrupt Flag** — Any change from passive to asserted (active) state or from active to passive state will be flagged by setting the PWMIF flag = 1. The flag is cleared by writing a logic 1 to it. Writing a 0 has no effect. 0 No change on PWM5IN input. 1 Change on PWM5IN input
6 PWMIE	**PWM Interrupt Enable** — If interrupt is enabled an interrupt to the CPU is asserted. 0 PWM interrupt is disabled. 1 PWM interrupt is enabled.
5 PWMRSTRT	**PWM Restart** — The PWM can only be restarted if the PWM channel input 5 is deasserted. After writing a logic 1 to the PWMRSTRT bit (trigger event) the PWM channels start running after the corresponding counter passes next “counter = 0” phase. Also, if the PWM5ENA bit is reset to 0, the PWM do not start before the counter passes 0x0000. The bit is always read as 0.
4 PWMLVL	**PWM Shutdown Output Level** — If active level as defined by the PWM5IN input, gets asserted all enabled PWM channels are immediately driven to the level defined by PWMLVL. 0 PWM outputs are forced to 0 1 PWM outputs are forced to 1.

Table 10-10. PWMSDN Field Descriptions (continued)

Field	Description
2 PWM5IN	**PWM Channel 5 Input Status** — This reflects the current status of the PWM5 pin.
1 PWM5INL	**PWM Shutdown Active Input Level for Channel 5** — If the emergency shutdown feature is enabled (PWM5ENA = 1), this bit determines the active level of the PWM5 channel. 0 Active level is low 1 Active level is high
0 PWM5ENA	**PWM Emergency Shutdown Enable** — If this bit is logic 1 the pin associated with channel 5 is forced to input and the emergency shutdown feature is enabled. All the other bits in this register are meaningful only if PWM5ENA = 1. 0 PWM emergency feature disabled. 1 PWM emergency feature is enabled.

10.4 Functional Description

10.4.1 PWM Clock Select

There are four available clocks called clock A, clock B, clock SA (scaled A), and clock SB (scaled B). These four clocks are based on the bus clock**.**

Clock A and B can be software selected to be 1, 1/2, 1/4, 1/8,..., 1/64, 1/128 times the bus clock. Clock SA uses clock A as an input and divides it further with a reloadable counter. Similarly, clock SB uses clock B as an input and divides it further with a reloadable counter. The rates available for clock SA are software selectable to be clock A divided by 2, 4, 6, 8, ..., or 512 in increments of divide by 2. Similar rates are available for clock SB. Each PWM channel has the capability of selecting one of two clocks, either the pre-scaled clock (clock A or B) or the scaled clock (clock SA or SB).

The block diagram in Figure 10-34 shows the four different clocks and how the scaled clocks are created.

10.4.1.1 Prescale

The input clock to the PWM prescaler is the bus clock. It can be disabled whenever the part is in freeze mode by setting the PFRZ bit in the PWMCTL register. If this bit is set, whenever the MCU is in freeze mode the input clock to the prescaler is disabled. This is useful for emulation in order to freeze the PWM. The input clock can also be disabled when all six PWM channels are disabled (PWME5–PWME0 = 0) This is useful for reducing power by disabling the prescale counter.

Clock A and clock B are scaled values of the input clock. The value is software selectable for both clock A and clock B and has options of 1, 1/2, 1/4, 1/8, 1/16, 1/32, 1/64, or 1/128 times the bus clock. The value selected for clock A is determined by the PCKA2, PCKA1, and PCKA0 bits in the PWMPRCLK register. The value selected for clock B is determined by the PCKB2, PCKB1, and PCKB0 bits also in the PWMPRCLK register.

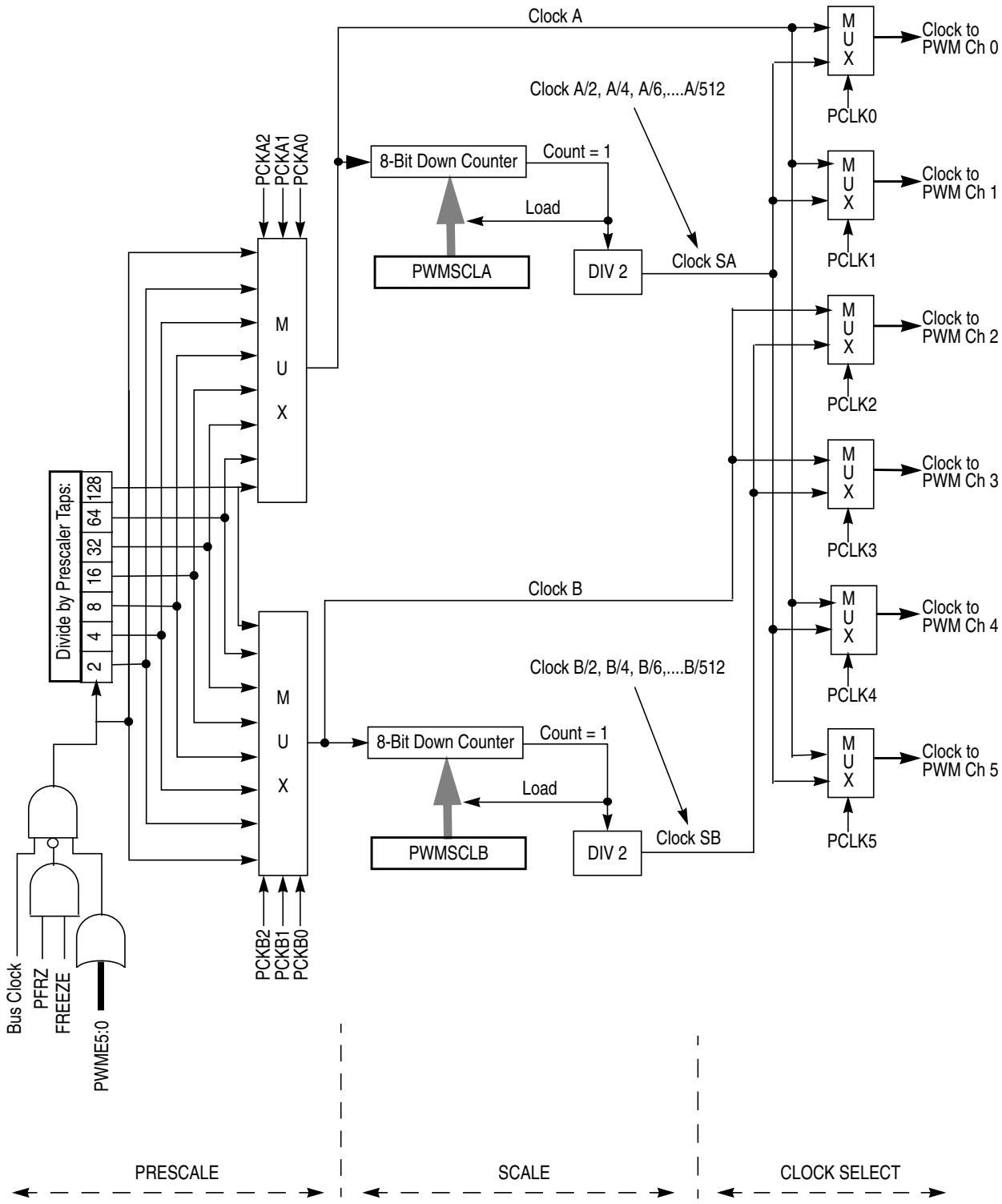

Figure 10-34. PWM Clock Select Block Diagram

10.4.1.2 Clock Scale

The scaled A clock uses clock A as an input and divides it further with a user programmable value and then divides this by 2. The scaled B clock uses clock B as an input and divides it further with a user programmable value and then divides this by 2. The rates available for clock SA are software selectable to be clock A divided by 2, 4, 6, 8, ..., or 512 in increments of divide by 2. Similar rates are available for clock SB.

Clock A is used as an input to an 8-bit down counter. This down counter loads a user programmable scale value from the scale register (PWMSCLA). When the down counter reaches 1, two things happen; a pulse is output and the 8-bit counter is re-loaded. The output signal from this circuit is further divided by two.

This gives a greater range with only a slight reduction in granularity. Clock SA equals clock A divided by two times the value in the PWMSCLA register.

NOTE

Clock SA = Clock A / (2 * PWMSCLA)

When PWMSCLA = 0x0000, PWMSCLA value is considered a full scale value of 256. Clock A is thus divided by 512.

Similarly, clock B is used as an input to an 8-bit down counter followed by a divide by two producing clock SB. Thus, clock SB equals clock B divided by two times the value in the PWMSCLB register.

NOTE

Clock SB = Clock B / (2 * PWMSCLB)

When PWMSCLB = 0x0000, PWMSCLB value is considered a full scale value of 256. Clock B is thus divided by 512.

As an example, consider the case in which the user writes 0x00FF into the PWMSCLA register. Clock A for this case will be bus clock divided by 4. A pulse will occur at a rate of once every 255 x 4 bus cycles. Passing this through the divide by two circuit produces a clock signal at a bus clock divided by 2040 rate. Similarly, a value of 0x0001 in the PWMSCLA register when clock A is bus clock divided by 4 will produce a bus clock divided by 8 rate.

Writing to PWMSCLA or PWMSCLB causes the associated 8-bit down counter to be re-loaded. Otherwise, when changing rates the counter would have to count down to 0x0001 before counting at the proper rate. Forcing the associated counter to re-load the scale register value every time PWMSCLA or PWMSCLB is written prevents this.

NOTE

Writing to the scale registers while channels are operating can cause irregularities in the PWM outputs.

10.4.1.3 Clock Select

Each PWM channel has the capability of selecting one of two clocks. For channels 0, 1, 4, and 5 the clock choices are clock A or clock SA. For channels 2 and 3 the choices are clock B or clock SB. The clock selection is done with the PCLKx control bits in the PWMCLK register.

NOTE

Changing clock control bits while channels are operating can cause irregularities in the PWM outputs.

10.4.2 PWM Channel Timers

The main part of the PWM module are the actual timers. Each of the timer channels has a counter, a period register and a duty register (each are 8 bit). The waveform output period is controlled by a match between the period register and the value in the counter. The duty is controlled by a match between the duty register and the counter value and causes the state of the output to change during the period. The starting polarity of the output is also selectable on a per channel basis. Figure 10-35 shows a block diagram for PWM timer.

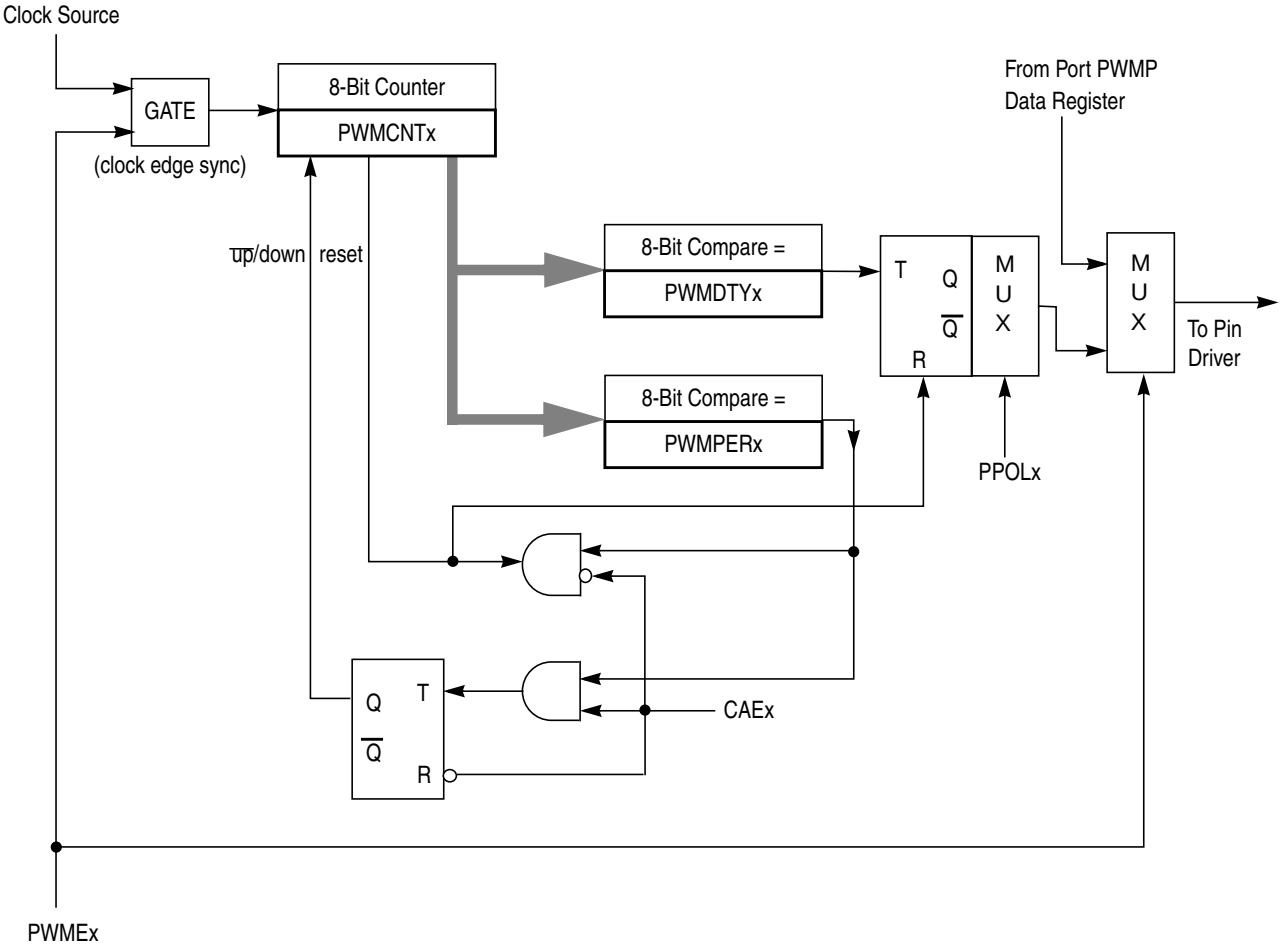

Figure 10-35. PWM Timer Channel Block Diagram

10.4.2.1 PWM Enable

Each PWM channel has an enable bit (PWMEx) to start its waveform output. When any of the PWMEx bits are set (PWMEx = 1), the associated PWM output signal is enabled immediately. However, the actual PWM waveform is not available on the associated PWM output until its clock source begins its next cycle

due to the synchronization of PWMEx and the clock source. An exception to this is when channels are concatenated. Refer to Section 10.4.2.7, “PWM 16-Bit Functions,” for more detail.

NOTE

The first PWM cycle after enabling the channel can be irregular.

On the front end of the PWM timer, the clock is enabled to the PWM circuit by the PWMEx bit being high. There is an edge-synchronizing circuit to guarantee that the clock will only be enabled or disabled at an edge. When the channel is disabled (PWMEx = 0), the counter for the channel does not count.

10.4.2.2 PWM Polarity

Each channel has a polarity bit to allow starting a waveform cycle with a high or low signal. This is shown on the block diagram as a mux select of either the Q output or the $\overline{Q}$ output of the PWM output flip-flop. When one of the bits in the PWMPOL register is set, the associated PWM channel output is high at the beginning of the waveform, then goes low when the duty count is reached. Conversely, if the polarity bit is 0, the output starts low and then goes high when the duty count is reached.

10.4.2.3 PWM Period and Duty

Dedicated period and duty registers exist for each channel and are double buffered so that if they change while the channel is enabled, the change will NOT take effect until one of the following occurs:

- The effective period ends
- The counter is written (counter resets to 0x0000)
- The channel is disabled

In this way, the output of the PWM will always be either the old waveform or the new waveform, not some variation in between. If the channel is not enabled, then writes to the period and duty registers will go directly to the latches as well as the buffer.

A change in duty or period can be forced into effect “immediately” by writing the new value to the duty and/or period registers and then writing to the counter. This forces the counter to reset and the new duty and/or period values to be latched. In addition, because the counter is readable it is possible to know where the count is with respect to the duty value and software can be used to make adjustments.

NOTE

When forcing a new period or duty into effect immediately, an irregular PWM cycle can occur.

Depending on the polarity bit, the duty registers will contain the count of either the high time or the low time.

10.4.2.4 PWM Timer Counters

Each channel has a dedicated 8-bit up/down counter which runs at the rate of the selected clock source (reference Figure 10-34 for the available clock sources and rates). The counter compares to two registers, a duty register and a period register as shown in Figure 10-35. When the PWM counter matches the duty register the output flip-flop changes state causing the PWM waveform to also change state. A match

between the PWM counter and the period register behaves differently depending on what output mode is selected as shown in Figure 10-35 and described in Section 10.4.2.5, “Left Aligned Outputs,” and Section 10.4.2.6, “Center Aligned Outputs.”

Each channel counter can be read at anytime without affecting the count or the operation of the PWM channel.

Any value written to the counter causes the counter to reset to 0x0000, the counter direction to be set to up, the immediate load of both duty and period registers with values from the buffers, and the output to change according to the polarity bit. When the channel is disabled (PWMEx = 0), the counter stops. When a channel becomes enabled (PWMEx = 1), the associated PWM counter continues from the count in the PWMCNTx register. This allows the waveform to resume when the channel is re-enabled. When the channel is disabled, writing 0 to the period register will cause the counter to reset on the next selected clock.

NOTE

If the user wants to start a new “clean” PWM waveform without any “history” from the old waveform, the user must write to channel counter (PWMCNTx) prior to enabling the PWM channel (PWMEx = 1).

Generally, writes to the counter are done prior to enabling a channel to start from a known state. However, writing a counter can also be done while the PWM channel is enabled (counting). The effect is similar to writing the counter when the channel is disabled except that the new period is started immediately with the output set according to the polarity bit.

NOTE

Writing to the counter while the channel is enabled can cause an irregular PWM cycle to occur.

The counter is cleared at the end of the effective period (see Section 10.4.2.5, “Left Aligned Outputs,” and Section 10.4.2.6, “Center Aligned Outputs,” for more details).

Table 10-11. PWM Timer Counter Conditions

Counter Clears (0x0000)	Counter Counts	Counter Stops
When PWMCNTx register written to any value	When PWM channel is enabled (PWMEx = 1). Counts from last value in PWMCNTx.	When PWM channel is disabled (PWMEx = 0)
Effective period ends		

10.4.2.5 Left Aligned Outputs

The PWM timer provides the choice of two types of outputs, left aligned or center aligned outputs. They are selected with the CAEx bits in the PWMCAE register. If the CAEx bit is cleared (CAEx = 0), the corresponding PWM output will be left aligned.

In left aligned output mode, the 8-bit counter is configured as an up counter only. It compares to two registers, a duty register and a period register as shown in the block diagram in Figure 10-35. When the

PWM counter matches the duty register the output flip-flop changes state causing the PWM waveform to also change state. A match between the PWM counter and the period register resets the counter and the output flip-flop as shown in Figure 10-35 as well as performing a load from the double buffer period and duty register to the associated registers as described in Section 10.4.2.3, "PWM Period and Duty." The counter counts from 0 to the value in the period register – 1.

NOTE

Changing the PWM output mode from left aligned output to center aligned output (or vice versa) while channels are operating can cause irregularities in the PWM output. It is recommended to program the output mode before enabling the PWM channel.

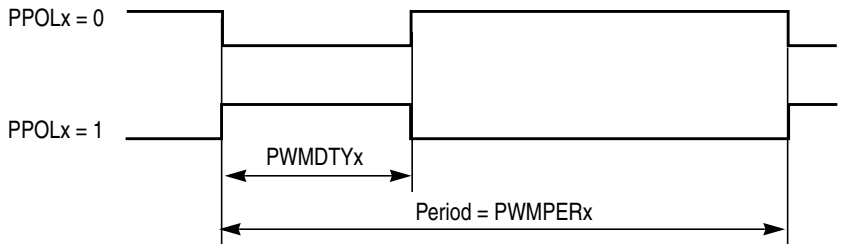

Figure 10-36. PWM Left Aligned Output Waveform

To calculate the output frequency in left aligned output mode for a particular channel, take the selected clock source frequency for the channel (A, B, SA, or SB) and divide it by the value in the period register for that channel.

- PWMx frequency = clock (A, B, SA, or SB) / PWMPERx
- PWMx duty cycle (high time as a% of period):
  - Polarity = 0 (PPOLx = 0)
    Duty cycle = [(PWMPERx-PWMDTYx)/PWMPERx] * 100%
  - Polarity = 1 (PPOLx = 1)
    Duty cycle = [PWMDTYx / PWMPERx] * 100%

As an example of a left aligned output, consider the following case:

Clock source = bus clock, where bus clock = 10 MHz (100 ns period)
PPOLx = 0
PWMPERx = 4
PWMDTYx = 1
PWMx frequency = 10 MHz/4 = 2.5 MHz
PWMx period = 400 ns
PWMx duty cycle = 3/4 *100% = 75%

Shown below is the output waveform generated.

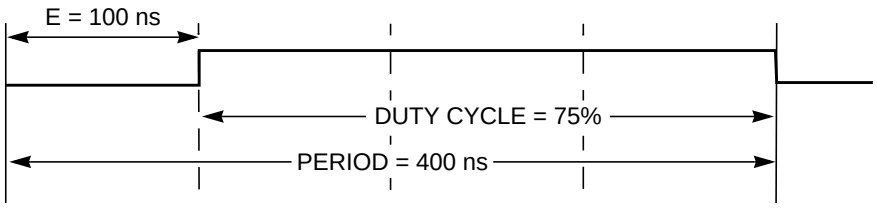

Figure 10-37. PWM Left Aligned Output Example Waveform

10.4.2.6 Center Aligned Outputs

For center aligned output mode selection, set the CAEx bit (CAEx = 1) in the PWMCAE register and the corresponding PWM output will be center aligned.

The 8-bit counter operates as an up/down counter in this mode and is set to up whenever the counter is equal to 0x0000. The counter compares to two registers, a duty register and a period register as shown in the block diagram in Figure 10-35. When the PWM counter matches the duty register the output flip-flop changes state causing the PWM waveform to also change state. A match between the PWM counter and the period register changes the counter direction from an up-count to a down-count. When the PWM counter decrements and matches the duty register again, the output flip-flop changes state causing the PWM output to also change state. When the PWM counter decrements and reaches 0, the counter direction changes from a down-count back to an up-count and a load from the double buffer period and duty registers to the associated registers is performed as described in Section 10.4.2.3, “PWM Period and Duty.” The counter counts from 0 up to the value in the period register and then back down to 0. Thus the effective period is PWMPERx*2.

NOTE

Changing the PWM output mode from left aligned output to center aligned output (or vice versa) while channels are operating can cause irregularities in the PWM output. It is recommended to program the output mode before enabling the PWM channel.

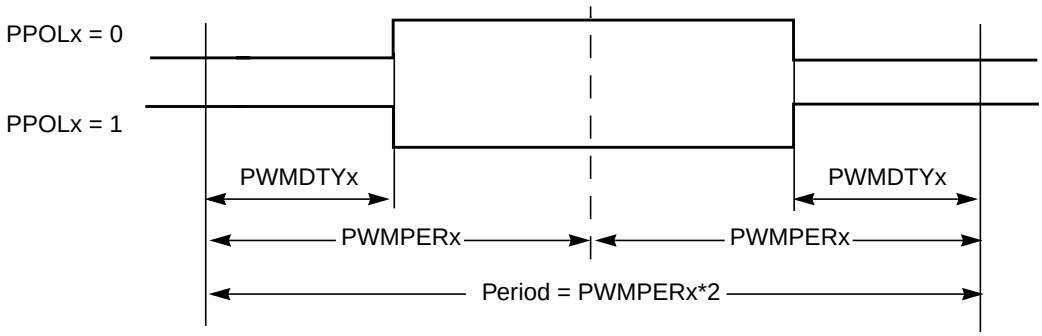

Figure 10-38. PWM Center Aligned Output Waveform

To calculate the output frequency in center aligned output mode for a particular channel, take the selected clock source frequency for the channel (A, B, SA, or SB) and divide it by twice the value in the period register for that channel.

- PWMx frequency = clock (A, B, SA, or SB) / (2*PWMPERx)

- PWMx duty cycle (high time as a% of period):
  - Polarity = 0 (PPOLx = 0)
    Duty cycle = [(PWMPERx-PWMDTYx)/PWMPERx] * 100%
  - Polarity = 1 (PPOLx = 1)
    Duty cycle = [PWMDTYx / PWMPERx] * 100%

As an example of a center aligned output, consider the following case:

Clock source = bus clock, where bus clock = 10 MHz (100 ns period)

PPOLx = 0

PWMPERx = 4

PWMDTYx = 1

PWMx frequency = 10 MHz/8 = 1.25 MHz

PWMx period = 800 ns

PWMx duty cycle = 3/4 *100% = 75%

Shown below is the output waveform generated.

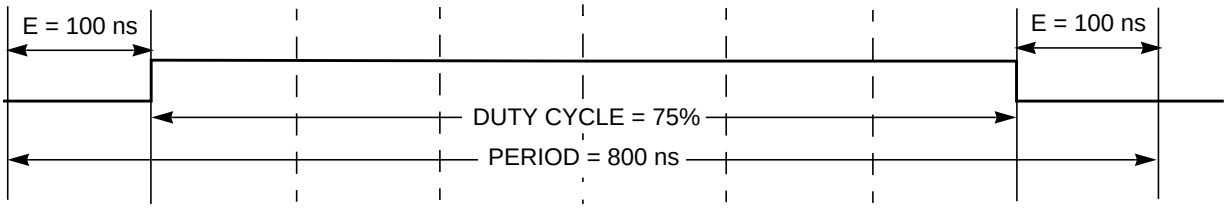

Figure 10-39. PWM Center Aligned Output Example Waveform

10.4.2.7 PWM 16-Bit Functions

The PWM timer also has the option of generating 6-channels of 8-bits or 3-channels of 16-bits for greater PWM resolution}. This 16-bit channel option is achieved through the concatenation of two 8-bit channels.

The PWMCTL register contains three control bits, each of which is used to concatenate a pair of PWM channels into one 16-bit channel. Channels 4 and 5 are concatenated with the CON45 bit, channels 2 and 3 are concatenated with the CON23 bit, and channels 0 and 1 are concatenated with the CON01 bit.

NOTE

Change these bits only when both corresponding channels are disabled.

When channels 4 and 5 are concatenated, channel 4 registers become the high-order bytes of the double byte channel as shown in Figure 10-40. Similarly, when channels 2 and 3 are concatenated, channel 2 registers become the high-order bytes of the double byte channel. When channels 0 and 1 are concatenated, channel 0 registers become the high-order bytes of the double byte channel.

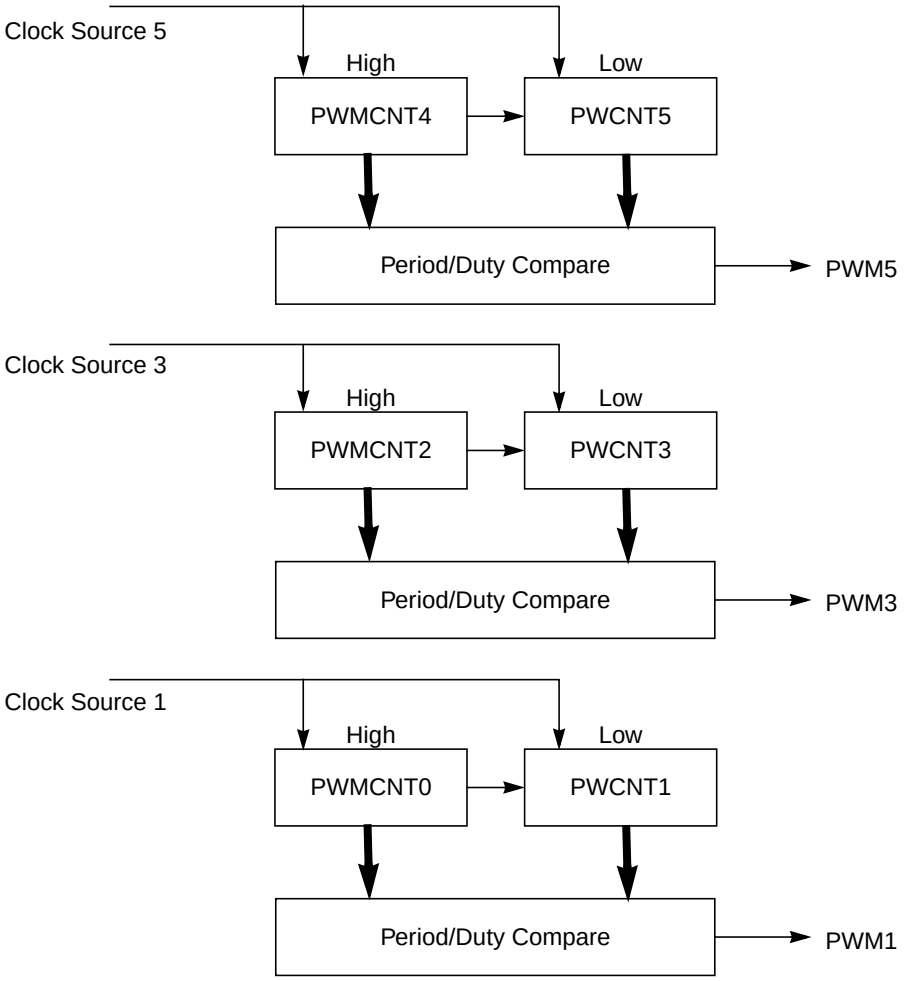

Figure 10-40. PWM 16-Bit Mode

When using the 16-bit concatenated mode, the clock source is determined by the low-order 8-bit channel clock select control bits. That is channel 5 when channels 4 and 5 are concatenated, channel 3 when channels 2 and 3 are concatenated, and channel 1 when channels 0 and 1 are concatenated. The resulting PWM is output to the pins of the corresponding low-order 8-bit channel as also shown in Figure 10-40. The polarity of the resulting PWM output is controlled by the PPOLx bit of the corresponding low-order 8-bit channel as well.

After concatenated mode is enabled (CONxx bits set in PWMCTL register), enabling/disabling the corresponding 16-bit PWM channel is controlled by the low-order PWMEx bit. In this case, the high-order bytes PWMEx bits have no effect and their corresponding PWM output is disabled.

In concatenated mode, writes to the 16-bit counter by using a 16-bit access or writes to either the low or high-order byte of the counter will reset the 16-bit counter. Reads of the 16-bit counter must be made by 16-bit access to maintain data coherency.

Either left aligned or center aligned output mode can be used in concatenated mode and is controlled by the low-order CAEx bit. The high-order CAEx bit has no effect.

Table 10-12 is used to summarize which channels are used to set the various control bits when in 16-bit mode.

Table 10-12. 16-bit Concatenation Mode Summary

CONxx	PWMEx	PPOLx	PCLKx	CAEx	PWMx Output
CON45	PWME5	PPOL5	PCLK5	CAE5	PWM5
CON23	PWME3	PPOL3	PCLK3	CAE3	PWM3
CON01	PWME1	PPOL1	PCLK1	CAE1	PWM1

10.4.2.8 PWM Boundary Cases

Table 10-13 summarizes the boundary conditions for the PWM regardless of the output mode (left aligned or center aligned) and 8-bit (normal) or 16-bit (concatenation):

Table 10-13. PWM Boundary Cases

PWMDTYx	PWMPERx	PPOLx	PWMx Output
0x0000 (indicates no duty)	>0x0000	1	Always Low
0x0000 (indicates no duty)	>0x0000	0	Always High
XX	0x0000(1) (indicates no period)	1	Always High
XX	0x0000[1] (indicates no period)	0	Always Low
>= PWMPERx	XX	1	Always High
>= PWMPERx	XX	0	Always Low

1. Counter = 0x0000 and does not count.

10.5 Resets

The reset state of each individual bit is listed within the register description section (see Section 10.3, “Memory Map and Register Definition,” which details the registers and their bit-fields. All special functions or modes which are initialized during or just following reset are described within this section.

- The 8-bit up/down counter is configured as an up counter out of reset.
- All the channels are disabled and all the counters don’t count.

10.6 Interrupts

The PMW8B6CV1 module has only one interrupt which is generated at the time of emergency shutdown, if the corresponding enable bit (PWMIE) is set. This bit is the enable for the interrupt. The interrupt flag PWMIF is set whenever the input level of the PWM5 channel changes while PWM5ENA=1 or when PWMENA is being asserted while the level at PWM5 is active.

A description of the registers involved and affected due to this interrupt is explained in Section 10.3.2.15, “PWM Shutdown Register (PWMSDN).”

Chapter 11
Serial Communication Interface (S12SCIV5)

Table 11-1. Revision History

Version Number	Revision Date	Effective Date	Author	Description of Changes
05.01	04/16/2004			Update OR and PF flag description; Correct baud rate tolerance in 4.7.5.1 and 4.7.5.2; Clean up classification and NDA message banners
05.02	10/14/2005			Correct alternative registers address; Remove unavailable baud rate in Table1-16
05.03	12/25/2008			remove redundancy comments in Figure1-2
05.04	08/05/2009			fix typo, SCIBDL reset value be 0x04, not 0x00

11.1 Introduction

This block guide provides an overview of the serial communication interface (SCI) module.

The SCI allows asynchronous serial communications with peripheral devices and other CPUs.

11.1.1 Glossary

IR: InfraRed

IrDA: Infrared Design Associate

IRQ: Interrupt Request

LIN: Local Interconnect Network

LSB: Least Significant Bit

MSB: Most Significant Bit

NRZ: Non-Return-to-Zero

RZI: Return-to-Zero-Inverted

RXD: Receive Pin

SCI : Serial Communication Interface

TXD: Transmit Pin

11.1.2 Features

The SCI includes these distinctive features:

- Full-duplex or single-wire operation
- Standard mark/space non-return-to-zero (NRZ) format
- Selectable IrDA 1.4 return-to-zero-inverted (RZI) format with programmable pulse widths
- 13-bit baud rate selection
- Programmable 8-bit or 9-bit data format
- Separately enabled transmitter and receiver
- Programmable polarity for transmitter and receiver
- Programmable transmitter output parity
- Two receiver wakeup methods:
  - Idle line wakeup
  - Address mark wakeup
- Interrupt-driven operation with eight flags:
  - Transmitter empty
  - Transmission complete
  - Receiver full
  - Idle receiver input
  - Receiver overrun
  - Noise error
  - Framing error
  - Parity error
  - Receive wakeup on active edge
  - Transmit collision detect supporting LIN
  - Break Detect supporting LIN
- Receiver framing error detection
- Hardware parity checking
- 1/16 bit-time noise detection

11.1.3 Modes of Operation

The SCI functions the same in normal, special, and emulation modes. It has two low power modes, wait and stop modes.

- Run mode
- Wait mode
- Stop mode

11.1.4 Block Diagram

Figure 11-1 is a high level block diagram of the SCI module, showing the interaction of various function blocks.

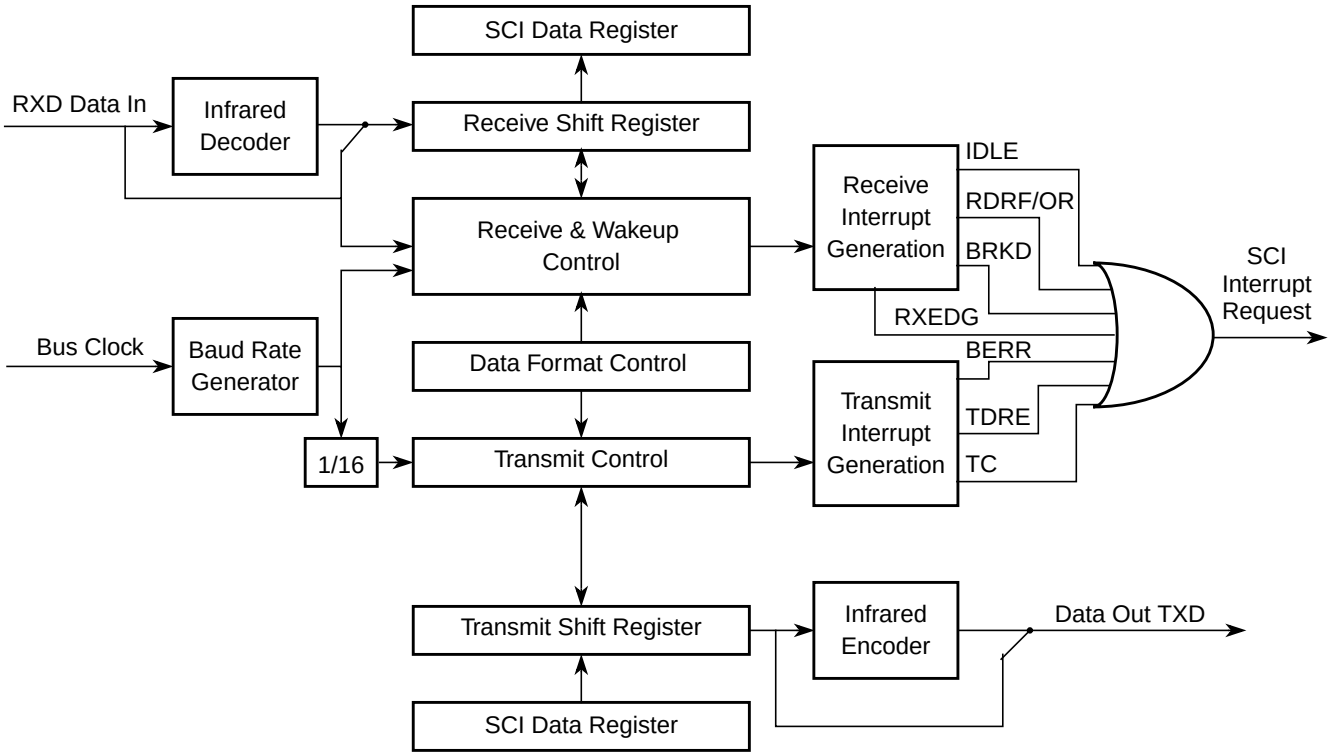

Figure 11-1. SCI Block Diagram

11.2 External Signal Description

The SCI module has a total of two external pins.

11.2.1 TXD — Transmit Pin

The TXD pin transmits SCI (standard or infrared) data. It will idle high in either mode and is high impedance anytime the transmitter is disabled.

11.2.2 RXD — Receive Pin

The RXD pin receives SCI (standard or infrared) data. An idle line is detected as a line high. This input is ignored when the receiver is disabled and should be terminated to a known voltage.

11.3 Memory Map and Register Definition

This section provides a detailed description of all the SCI registers.

11.3.1 Module Memory Map and Register Definition

The memory map for the SCI module is given below in Figure 11-2. The address listed for each register is the address offset. The total address for each register is the sum of the base address for the SCI module and the address offset for each register.

11.3.2 Register Descriptions

This section consists of register descriptions in address order. Each description includes a standard register diagram with an associated figure number. Writes to a reserved register locations do not have any effect and reads of these locations return a zero. Details of register bit and field function follow the register diagrams, in bit order.

Register Name		Bit 7	6	5	4	3	2	1	Bit 0
0x0000 SCIBDH[1]	R	IREN	TNP1	TNP0	SBR12	SBR11	SBR10	SBR9	SBR8
	W								
0x0001 SCIBDL[1]	R	SBR7	SBR6	SBR5	SBR4	SBR3	SBR2	SBR1	SBR0
	W								
0x0002 SCICR1[1]	R	LOOPS	SCISWAI	RSRC	M	WAKE	ILT	PE	PT
	W								
0x0000 SCIASR1[2]	R	RXEDGIF	0	0	0	0	BERRV	BERRIF	BKDIF
	W								
0x0001 SCIACR1[2]	R	RXEDGIE	0	0	0	0	0	BERRIE	BKDIE
	W								
0x0002 SCIACR2[2]	R	0	0	0	0	0	BERRM1	BERRM0	BKDFE
	W								
0x0003 SCICR2	R	TIE	TCIE	RIE	ILIE	TE	RE	RWU	SBK
	W								
0x0004 SCISR1	R	TDRE	TC	RDRF	IDLE	OR	NF	FE	PF
	W								
0x0005 SCISR2	R	AMAP	0	0	TXPOL	RXPOL	BRK13	TXDIR	RAF
	W								

= Unimplemented or Reserved

Figure 11-2. SCI Register Summary (Sheet 1 of 2)

Register Name		Bit 7	6	5	4	3	2	1	Bit 0
0x0006 SCIDRH	R	R8	T8	0	0	0	0	0	0
	W								
0x0007 SCIDRL	R	R7	R6	R5	R4	R3	R2	R1	R0
	W	T7	T6	T5	T4	T3	T2	T1	T0

1.These registers are accessible if the AMAP bit in the SCISR2 register is set to zero.
2,These registers are accessible if the AMAP bit in the SCISR2 register is set to one.

= Unimplemented or Reserved

Figure 11-2. SCI Register Summary (Sheet 2 of 2)

11.3.2.1 SCI Baud Rate Registers (SCIBDH, SCIBDL)

Module Base + 0x0000

	7	6	5	4	3	2	1	0
R W	IREN	TNP1	TNP0	SBR12	SBR11	SBR10	SBR9	SBR8
Reset	0	0	0	0	0	0	0	0

Figure 11-3. SCI Baud Rate Register (SCIBDH)

Module Base + 0x0001

	7	6	5	4	3	2	1	0
R W	SBR7	SBR6	SBR5	SBR4	SBR3	SBR2	SBR1	SBR0
Reset	0	0	0	0	0	1	0	0

Figure 11-4. SCI Baud Rate Register (SCIBDL)

Read: Anytime, if AMAP = 0. If only SCIBDH is written to, a read will not return the correct data until SCIBDL is written to as well, following a write to SCIBDH.

Write: Anytime, if AMAP = 0.

NOTE

Those two registers are only visible in the memory map if AMAP = 0 (reset condition).

The SCI baud rate register is used by to determine the baud rate of the SCI, and to control the infrared modulation/demodulation submodule.

Table 11-2. SCIBDH and SCIBDL Field Descriptions

Field	Description
7 IREN	**Infrared Enable Bit** — This bit enables/disables the infrared modulation/demodulation submodule. 0 IR disabled 1 IR enabled
6:5 TNP[1:0]	**Transmitter Narrow Pulse Bits** — These bits enable whether the SCI transmits a 1/16, 3/16, 1/32 or 1/4 narrow pulse. See Table 11-3.
4:0 7:0 SBR[12:0]	**SCI Baud Rate Bits** — The baud rate for the SCI is determined by the bits in this register. The baud rate is calculated two different ways depending on the state of the IREN bit. The formulas for calculating the baud rate are: When IREN = 0 then, SCI baud rate = SCI bus clock / (16 x SBR[12:0]) When IREN = 1 then, SCI baud rate = SCI bus clock / (32 x SBR[12:1]) **Note:** The baud rate generator is disabled after reset and not started until the TE bit or the RE bit is set for the first time. The baud rate generator is disabled when (SBR[12:0] = 0 and IREN = 0) or (SBR[12:1] = 0 and IREN = 1). **Note:** Writing to SCIBDH has no effect without writing to SCIBDL, because writing to SCIBDH puts the data in a temporary location until SCIBDL is written to.

Table 11-3. IRSCI Transmit Pulse Width

TNP[1:0]	Narrow Pulse Width
11	1/4
10	1/32
01	1/16
00	3/16

11.3.2.2 SCI Control Register 1 (SCICR1)

Module Base + 0x0002

	7	6	5	4	3	2	1	0
R W	LOOPS	SCISWAI	RSRC	M	WAKE	ILT	PE	PT
Reset	0	0	0	0	0	0	0	0

Figure 11-5. SCI Control Register 1 (SCICR1)

Read: Anytime, if AMAP = 0.

Write: Anytime, if AMAP = 0.

NOTE

This register is only visible in the memory map if AMAP = 0 (reset condition).

Table 11-4. SCICR1 Field Descriptions

Field	Description
7 LOOPS	**Loop Select Bit** — LOOPS enables loop operation. In loop operation, the RXD pin is disconnected from the SCI and the transmitter output is internally connected to the receiver input. Both the transmitter and the receiver must be enabled to use the loop function. 0 Normal operation enabled 1 Loop operation enabled The receiver input is determined by the RSRC bit.
6 SCISWAI	**SCI Stop in Wait Mode Bit** — SCISWAI disables the SCI in wait mode. 0 SCI enabled in wait mode 1 SCI disabled in wait mode
5 RSRC	**Receiver Source Bit** — When LOOPS = 1, the RSRC bit determines the source for the receiver shift register input. See Table 11-5. 0 Receiver input internally connected to transmitter output 1 Receiver input connected externally to transmitter
4 M	**Data Format Mode Bit** — MODE determines whether data characters are eight or nine bits long. 0 One start bit, eight data bits, one stop bit 1 One start bit, nine data bits, one stop bit
3 WAKE	**Wakeup Condition Bit** — WAKE determines which condition wakes up the SCI: a logic 1 (address mark) in the most significant bit position of a received data character or an idle condition on the RXD pin. 0 Idle line wakeup 1 Address mark wakeup
2 ILT	**Idle Line Type Bit** — ILT determines when the receiver starts counting logic 1s as idle character bits. The counting begins either after the start bit or after the stop bit. If the count begins after the start bit, then a string of logic 1s preceding the stop bit may cause false recognition of an idle character. Beginning the count after the stop bit avoids false idle character recognition, but requires properly synchronized transmissions. 0 Idle character bit count begins after start bit 1 Idle character bit count begins after stop bit
1 PE	**Parity Enable Bit** — PE enables the parity function. When enabled, the parity function inserts a parity bit in the most significant bit position. 0 Parity function disabled 1 Parity function enabled
0 PT	**Parity Type Bit** — PT determines whether the SCI generates and checks for even parity or odd parity. With even parity, an even number of 1s clears the parity bit and an odd number of 1s sets the parity bit. With odd parity, an odd number of 1s clears the parity bit and an even number of 1s sets the parity bit. 1 Even parity 1 Odd parity

Table 11-5. Loop Functions

LOOPS	RSRC	Function
0	x	Normal operation
1	0	Loop mode with transmitter output internally connected to receiver input
1	1	Single-wire mode with TXD pin connected to receiver input

11.3.2.3 SCI Alternative Status Register 1 (SCIASR1)

Module Base + 0x0000

	7	6	5	4	3	2	1	0
R	RXEDGIF	0	0	0	0	BERRV	BERRIF	BKDIF
W								
Reset	0	0	0	0	0	0	0	0

= Unimplemented or Reserved

Figure 11-6. SCI Alternative Status Register 1 (SCIASR1)

Read: Anytime, if AMAP = 1

Write: Anytime, if AMAP = 1

Table 11-6. SCIASR1 Field Descriptions

Field	Description
7 RXEDGIF	**Receive Input Active Edge Interrupt Flag** — RXEDGIF is asserted, if an active edge (falling if RXPOL = 0, rising if RXPOL = 1) on the RXD input occurs. RXEDGIF bit is cleared by writing a “1” to it. 0 No active receive on the receive input has occurred 1 An active edge on the receive input has occurred
2 BERRV	**Bit Error Value** — BERRV reflects the state of the RXD input when the bit error detect circuitry is enabled and a mismatch to the expected value happened. The value is only meaningful, if BERRIF = 1. 0 A low input was sampled, when a high was expected 1 A high input reassembled, when a low was expected
1 BERRIF	**Bit Error Interrupt Flag** — BERRIF is asserted, when the bit error detect circuitry is enabled and if the value sampled at the RXD input does not match the transmitted value. If the BERRIE interrupt enable bit is set an interrupt will be generated. The BERRIF bit is cleared by writing a “1” to it. 0 No mismatch detected 1 A mismatch has occurred
0 BKDIF	**Break Detect Interrupt Flag** — BKDIF is asserted, if the break detect circuitry is enabled and a break signal is received. If the BKDIE interrupt enable bit is set an interrupt will be generated. The BKDIF bit is cleared by writing a “1” to it. 0 No break signal was received 1 A break signal was received

11.3.2.4 SCI Alternative Control Register 1 (SCIACR1)

Module Base + 0x0001

	7	6	5	4	3	2	1	0
R	RXEDGIE	0	0	0	0	0	BERRIE	BKDIE
W								
Reset	0	0	0	0	0	0	0	0

= Unimplemented or Reserved

Figure 11-7. SCI Alternative Control Register 1 (SCIACR1)

Read: Anytime, if AMAP = 1

Write: Anytime, if AMAP = 1

Table 11-7. SCIACR1 Field Descriptions

Field	Description
7 RSEDGIE	**Receive Input Active Edge Interrupt Enable** — RXEDGIE enables the receive input active edge interrupt flag, RXEDGIF, to generate interrupt requests. 0 RXEDGIF interrupt requests disabled 1 RXEDGIF interrupt requests enabled
1 BERRIE	**Bit Error Interrupt Enable** — BERRIE enables the bit error interrupt flag, BERRIF, to generate interrupt requests. 0 BERRIF interrupt requests disabled 1 BERRIF interrupt requests enabled
0 BKDIE	**Break Detect Interrupt Enable** — BKDIE enables the break detect interrupt flag, BKDIF, to generate interrupt requests. 0 BKDIF interrupt requests disabled 1 BKDIF interrupt requests enabled

11.3.2.5 SCI Alternative Control Register 2 (SCIACR2)

Module Base + 0x0002

	7	6	5	4	3	2	1	0
R	0	0	0	0	0	BERRM1	BERRM0	BKDFE
W								
Reset	0	0	0	0	0	0	0	0

= Unimplemented or Reserved

Figure 11-8. SCI Alternative Control Register 2 (SCIACR2)

Read: Anytime, if AMAP = 1

Write: Anytime, if AMAP = 1

Table 11-8. SCIACR2 Field Descriptions

Field	Description
2:1 BERRM[1:0]	**Bit Error Mode** — Those two bits determines the functionality of the bit error detect feature. See Table 11-9.
0 BKDFE	**Break Detect Feature Enable** — BKDFE enables the break detect circuitry. 0 Break detect circuit disabled 1 Break detect circuit enabled

Table 11-9. Bit Error Mode Coding

BERRM1	BERRM0	Function
0	0	Bit error detect circuit is disabled
0	1	Receive input sampling occurs during the 9th time tick of a transmitted bit (refer to Figure 11-19)
1	0	Receive input sampling occurs during the 13th time tick of a transmitted bit (refer to Figure 11-19)
1	1	Reserved

11.3.2.6 SCI Control Register 2 (SCICR2)

Module Base + 0x0003

	7	6	5	4	3	2	1	0
R W	TIE	TCIE	RIE	ILIE	TE	RE	RWU	SBK
Reset	0	0	0	0	0	0	0	0

Figure 11-9. SCI Control Register 2 (SCICR2)

Read: Anytime

Write: Anytime

Table 11-10. SCICR2 Field Descriptions

Field	Description
7 TIE	**Transmitter Interrupt Enable Bit** — TIE enables the transmit data register empty flag, TDRE, to generate interrupt requests. 0 TDRE interrupt requests disabled 1 TDRE interrupt requests enabled
6 TCIE	**Transmission Complete Interrupt Enable Bit** — TCIE enables the transmission complete flag, TC, to generate interrupt requests. 0 TC interrupt requests disabled 1 TC interrupt requests enabled
5 RIE	**Receiver Full Interrupt Enable Bit** — RIE enables the receive data register full flag, RDRF, or the overrun flag, OR, to generate interrupt requests. 0 RDRF and OR interrupt requests disabled 1 RDRF and OR interrupt requests enabled
4 ILIE	**Idle Line Interrupt Enable Bit** — ILIE enables the idle line flag, IDLE, to generate interrupt requests. 0 IDLE interrupt requests disabled 1 IDLE interrupt requests enabled
3 TE	**Transmitter Enable Bit** — TE enables the SCI transmitter and configures the TXD pin as being controlled by the SCI. The TE bit can be used to queue an idle preamble. 0 Transmitter disabled 1 Transmitter enabled
2 RE	**Receiver Enable Bit** — RE enables the SCI receiver. 0 Receiver disabled 1 Receiver enabled
1 RWU	**Receiver Wakeup Bit** — Standby state 0 Normal operation. 1 RWU enables the wakeup function and inhibits further receiver interrupt requests. Normally, hardware wakes the receiver by automatically clearing RWU.
0 SBK	**Send Break Bit** — Toggling SBK sends one break character (10 or 11 logic 0s, respectively 13 or 14 logics 0s if BRK13 is set). Toggling implies clearing the SBK bit before the break character has finished transmitting. As long as SBK is set, the transmitter continues to send complete break characters (10 or 11 bits, respectively 13 or 14 bits). 0 No break characters 1 Transmit break characters

11.3.2.7 SCI Status Register 1 (SCISR1)

The SCISR1 and SCISR2 registers provides inputs to the MCU for generation of SCI interrupts. Also, these registers can be polled by the MCU to check the status of these bits. The flag-clearing procedures require that the status register be read followed by a read or write to the SCI data register.It is permissible to execute other instructions between the two steps as long as it does not compromise the handling of I/O, but the order of operations is important for flag clearing.

Module Base + 0x0004

	7	6	5	4	3	2	1	0
R	TDRE	TC	RDRF	IDLE	OR	NF	FE	PF
W								
Reset	1	1	0	0	0	0	0	0

= Unimplemented or Reserved

Figure 11-10. SCI Status Register 1 (SCISR1)

Read: Anytime

Write: Has no meaning or effect

Table 11-11. SCISR1 Field Descriptions

Field	Description
7 TDRE	**Transmit Data Register Empty Flag** — TDRE is set when the transmit shift register receives a byte from the SCI data register. When TDRE is 1, the transmit data register (SCIDRH/L) is empty and can receive a new value to transmit.Clear TDRE by reading SCI status register 1 (SCISR1), with TDRE set and then writing to SCI data register low (SCIDRL). 0 No byte transferred to transmit shift register 1 Byte transferred to transmit shift register; transmit data register empty
6 TC	**Transmit Complete Flag** — TC is set low when there is a transmission in progress or when a preamble or break character is loaded. TC is set high when the TDRE flag is set and no data, preamble, or break character is being transmitted.When TC is set, the TXD pin becomes idle (logic 1). Clear TC by reading SCI status register 1 (SCISR1) with TC set and then writing to SCI data register low (SCIDRL). TC is cleared automatically when data, preamble, or break is queued and ready to be sent. TC is cleared in the event of a simultaneous set and clear of the TC flag (transmission not complete). 0 Transmission in progress 1 No transmission in progress
5 RDRF	**Receive Data Register Full Flag** — RDRF is set when the data in the receive shift register transfers to the SCI data register. Clear RDRF by reading SCI status register 1 (SCISR1) with RDRF set and then reading SCI data register low (SCIDRL). 0 Data not available in SCI data register 1 Received data available in SCI data register
4 IDLE	**Idle Line Flag** — IDLE is set when 10 consecutive logic 1s (if M = 0) or 11 consecutive logic 1s (if M =1) appear on the receiver input. Once the IDLE flag is cleared, a valid frame must again set the RDRF flag before an idle condition can set the IDLE flag.Clear IDLE by reading SCI status register 1 (SCISR1) with IDLE set and then reading SCI data register low (SCIDRL). 0 Receiver input is either active now or has never become active since the IDLE flag was last cleared 1 Receiver input has become idle **Note:** When the receiver wakeup bit (RWU) is set, an idle line condition does not set the IDLE flag.

Table 11-11. SCISR1 Field Descriptions (continued)

Field	Description
3 OR	**Overrun Flag** — OR is set when software fails to read the SCI data register before the receive shift register receives the next frame. The OR bit is set immediately after the stop bit has been completely received for the second frame. The data in the shift register is lost, but the data already in the SCI data registers is not affected. Clear OR by reading SCI status register 1 (SCISR1) with OR set and then reading SCI data register low (SCIDRL). 0 No overrun 1 Overrun **Note:** OR flag may read back as set when RDRF flag is clear. This may happen if the following sequence of events occurs: 1. After the first frame is received, read status register SCISR1 (returns RDRF set and OR flag clear); 2. Receive second frame without reading the first frame in the data register (the second frame is not received and OR flag is set); 3. Read data register SCIDRL (returns first frame and clears RDRF flag in the status register); 4. Read status register SCISR1 (returns RDRF clear and OR set). Event 3 may be at exactly the same time as event 2 or any time after. When this happens, a dummy SCIDRL read following event 4 will be required to clear the OR flag if further frames are to be received.
2 NF	**Noise Flag** — NF is set when the SCI detects noise on the receiver input. NF bit is set during the same cycle as the RDRF flag but does not get set in the case of an overrun. Clear NF by reading SCI status register 1(SCISR1), and then reading SCI data register low (SCIDRL). 0 No noise 1 Noise
1 FE	**Framing Error Flag** — FE is set when a logic 0 is accepted as the stop bit. FE bit is set during the same cycle as the RDRF flag but does not get set in the case of an overrun. FE inhibits further data reception until it is cleared. Clear FE by reading SCI status register 1 (SCISR1) with FE set and then reading the SCI data register low (SCIDRL). 0 No framing error 1 Framing error
0 PF	**Parity Error Flag** — PF is set when the parity enable bit (PE) is set and the parity of the received data does not match the parity type bit (PT). PF bit is set during the same cycle as the RDRF flag but does not get set in the case of an overrun. Clear PF by reading SCI status register 1 (SCISR1), and then reading SCI data register low (SCIDRL). 0 No parity error 1 Parity error

11.3.2.8 SCI Status Register 2 (SCISR2)

Module Base + 0x0005

	7	6	5	4	3	2	1	0
R	AMAP	0	0	TXPOL	RXPOL	BRK13	TXDIR	RAF
W								
Reset	0	0	0	0	0	0	0	0

= Unimplemented or Reserved

Figure 11-11. SCI Status Register 2 (SCISR2)

Read: Anytime

Write: Anytime

Table 11-12. SCISR2 Field Descriptions

Field	Description
7 AMAP	**Alternative Map** — This bit controls which registers sharing the same address space are accessible. In the reset condition the SCI behaves as previous versions. Setting AMAP=1 allows the access to another set of control and status registers and hides the baud rate and SCI control Register 1. 0 The registers labelled SCIBDH (0x0000),SCIBDL (0x0001), SCICR1 (0x0002) are accessible 1 The registers labelled SCIASR1 (0x0000),SCIACR1 (0x0001), SCIACR2 (0x00002) are accessible
4 TXPOL	**Transmit Polarity** — This bit control the polarity of the transmitted data. In NRZ format, a one is represented by a mark and a zero is represented by a space for normal polarity, and the opposite for inverted polarity. In IrDA format, a zero is represented by short high pulse in the middle of a bit time remaining idle low for a one for normal polarity, and a zero is represented by short low pulse in the middle of a bit time remaining idle high for a one for inverted polarity. 0 Normal polarity 1 Inverted polarity
3 RXPOL	**Receive Polarity** — This bit control the polarity of the received data. In NRZ format, a one is represented by a mark and a zero is represented by a space for normal polarity, and the opposite for inverted polarity. In IrDA format, a zero is represented by short high pulse in the middle of a bit time remaining idle low for a one for normal polarity, and a zero is represented by short low pulse in the middle of a bit time remaining idle high for a one for inverted polarity. 0 Normal polarity 1 Inverted polarity
2 BRK13	**Break Transmit Character Length** — This bit determines whether the transmit break character is 10 or 11 bit respectively 13 or 14 bits long. The detection of a framing error is not affected by this bit. 0 Break character is 10 or 11 bit long 1 Break character is 13 or 14 bit long
1 TXDIR	**Transmitter Pin Data Direction in Single-Wire Mode** — This bit determines whether the TXD pin is going to be used as an input or output, in the single-wire mode of operation. This bit is only relevant in the single-wire mode of operation. 0 TXD pin to be used as an input in single-wire mode 1 TXD pin to be used as an output in single-wire mode
0 RAF	**Receiver Active Flag** — RAF is set when the receiver detects a logic 0 during the RT1 time period of the start bit search. RAF is cleared when the receiver detects an idle character. 0 No reception in progress 1 Reception in progress

11.3.2.9 SCI Data Registers (SCIDRH, SCIDRL)

Module Base + 0x0006

	7	6	5	4	3	2	1	0
R	R8	T8	0	0	0	0	0	0
W								
Reset	0	0	0	0	0	0	0	0

= Unimplemented or Reserved

Figure 11-12. SCI Data Registers (SCIDRH)

Module Base + 0x0007

	7	6	5	4	3	2	1	0
R	R7	R6	R5	R4	R3	R2	R1	R0
W	T7	T6	T5	T4	T3	T2	T1	T0
Reset	0	0	0	0	0	0	0	0

Figure 11-13. SCI Data Registers (SCIDRL)

Read: Anytime; reading accesses SCI receive data register

Write: Anytime; writing accesses SCI transmit data register; writing to R8 has no effect

Table 11-13. SCIDRH and SCIDRL Field Descriptions

Field	Description
SCIDRH 7 R8	**Received Bit 8** — R8 is the ninth data bit received when the SCI is configured for 9-bit data format (M = 1).
SCIDRH 6 T8	**Transmit Bit 8** — T8 is the ninth data bit transmitted when the SCI is configured for 9-bit data format (M = 1).
SCIDRL 7:0 R[7:0] T[7:0]	**R7:R0** — Received bits seven through zero for 9-bit or 8-bit data formats **T7:T0** — Transmit bits seven through zero for 9-bit or 8-bit formats

NOTE

If the value of T8 is the same as in the previous transmission, T8 does not have to be rewritten.The same value is transmitted until T8 is rewritten

In 8-bit data format, only SCI data register low (SCIDRL) needs to be accessed.

When transmitting in 9-bit data format and using 8-bit write instructions, write first to SCI data register high (SCIDRH), then SCIDRL.

11.4 Functional Description

This section provides a complete functional description of the SCI block, detailing the operation of the design from the end user perspective in a number of subsections.

Figure 11-14 shows the structure of the SCI module. The SCI allows full duplex, asynchronous, serial communication between the CPU and remote devices, including other CPUs. The SCI transmitter and receiver operate independently, although they use the same baud rate generator. The CPU monitors the status of the SCI, writes the data to be transmitted, and processes received data.

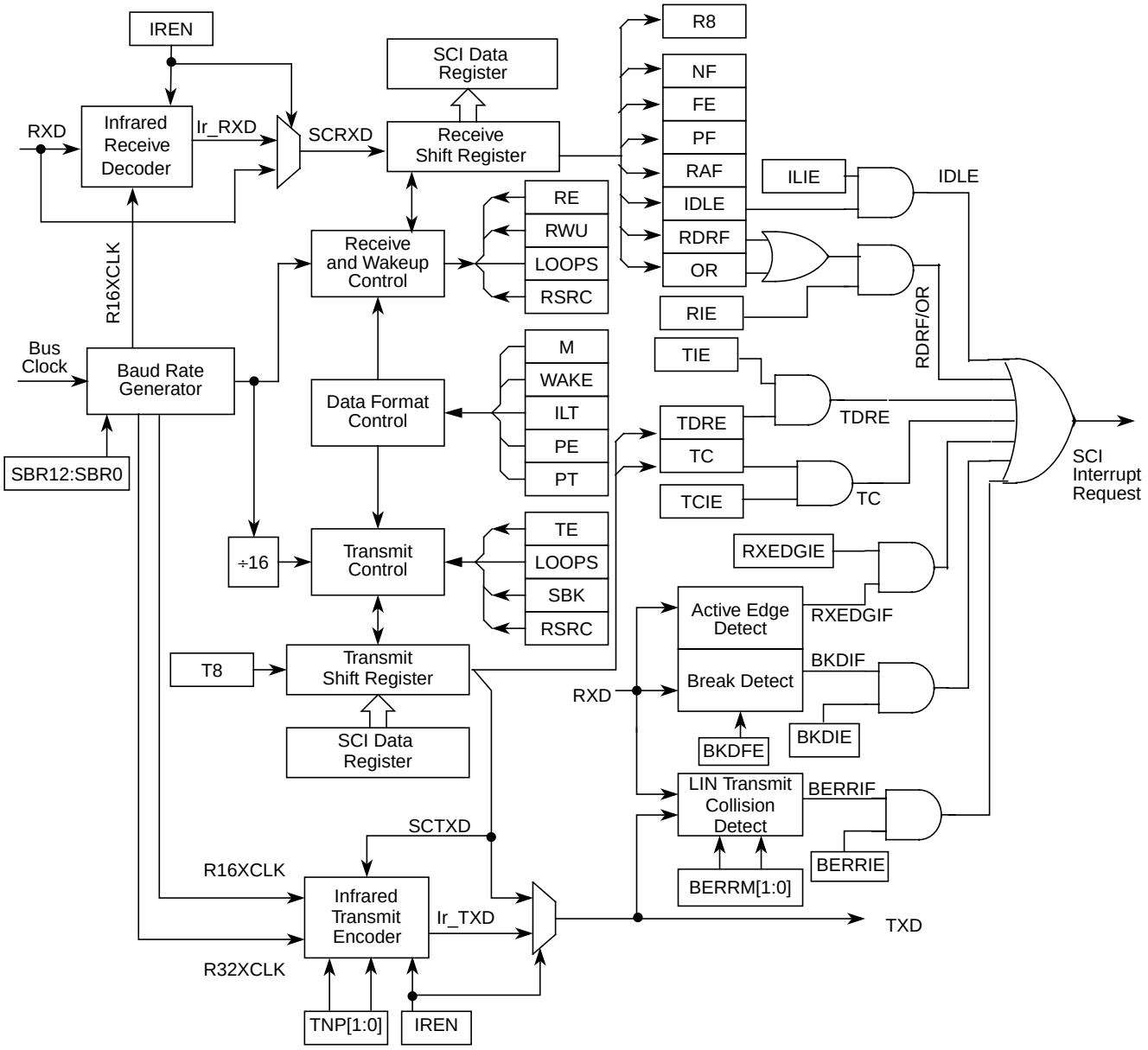

Figure 11-14. Detailed SCI Block Diagram

11.4.1 Infrared Interface Submodule

This module provides the capability of transmitting narrow pulses to an IR LED and receiving narrow pulses and transforming them to serial bits, which are sent to the SCI. The IrDA physical layer specification defines a half-duplex infrared communication link for exchange data. The full standard includes data rates up to 16 Mbits/s. This design covers only data rates between 2.4 Kbits/s and 115.2 Kbits/s.

The infrared submodule consists of two major blocks: the transmit encoder and the receive decoder. The SCI transmits serial bits of data which are encoded by the infrared submodule to transmit a narrow pulse

for every zero bit. No pulse is transmitted for every one bit. When receiving data, the IR pulses should be detected using an IR photo diode and transformed to CMOS levels by the IR receive decoder (external from the MCU). The narrow pulses are then stretched by the infrared submodule to get back to a serial bit stream to be received by the SCI.The polarity of transmitted pulses and expected receive pulses can be inverted so that a direct connection can be made to external IrDA transceiver modules that uses active low pulses.

The infrared submodule receives its clock sources from the SCI. One of these two clocks are selected in the infrared submodule in order to generate either 3/16, 1/16, 1/32 or 1/4 narrow pulses during transmission. The infrared block receives two clock sources from the SCI, R16XCLK and R32XCLK, which are configured to generate the narrow pulse width during transmission. The R16XCLK and R32XCLK are internal clocks with frequencies 16 and 32 times the baud rate respectively. Both R16XCLK and R32XCLK clocks are used for transmitting data. The receive decoder uses only the R16XCLK clock.

11.4.1.1 Infrared Transmit Encoder

The infrared transmit encoder converts serial bits of data from transmit shift register to the TXD pin. A narrow pulse is transmitted for a zero bit and no pulse for a one bit. The narrow pulse is sent in the middle of the bit with a duration of 1/32, 1/16, 3/16 or 1/4 of a bit time. A narrow high pulse is transmitted for a zero bit when TXPOL is cleared, while a narrow low pulse is transmitted for a zero bit when TXPOL is set.

11.4.1.2 Infrared Receive Decoder

The infrared receive block converts data from the RXD pin to the receive shift register. A narrow pulse is expected for each zero received and no pulse is expected for each one received. A narrow high pulse is expected for a zero bit when RXPOL is cleared, while a narrow low pulse is expected for a zero bit when RXPOL is set. This receive decoder meets the edge jitter requirement as defined by the IrDA serial infrared physical layer specification.

11.4.2 LIN Support

This module provides some basic support for the LIN protocol. At first this is a break detect circuitry making it easier for the LIN software to distinguish a break character from an incoming data stream. As a further addition is supports a collision detection at the bit level as well as cancelling pending transmissions.

11.4.3 Data Format

The SCI uses the standard NRZ mark/space data format. When Infrared is enabled, the SCI uses RZI data format where zeroes are represented by light pulses and ones remain low. See Figure 11-15 below.

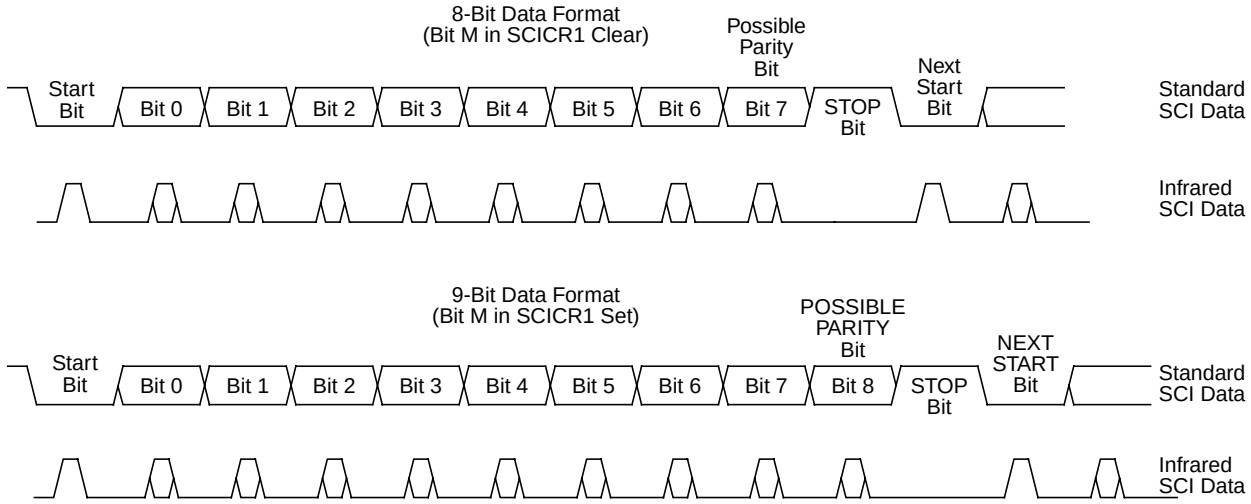

Figure 11-15. SCI Data Formats

Each data character is contained in a frame that includes a start bit, eight or nine data bits, and a stop bit. Clearing the M bit in SCI control register 1 configures the SCI for 8-bit data characters. A frame with eight data bits has a total of 10 bits. Setting the M bit configures the SCI for nine-bit data characters. A frame with nine data bits has a total of 11 bits.

Table 11-14. Example of 8-Bit Data Formats

Start Bit	Data Bits	Address Bits	Parity Bits	Stop Bit
1	8	0	0	1
1	7	0	1	1
1	7	1[1]	0	1

1. The address bit identifies the frame as an address character. See Section 11.4.6.6, “Receiver Wakeup”.

When the SCI is configured for 9-bit data characters, the ninth data bit is the T8 bit in SCI data register high (SCIDRH). It remains unchanged after transmission and can be used repeatedly without rewriting it. A frame with nine data bits has a total of 11 bits.

Table 11-15. Example of 9-Bit Data Formats

Start Bit	Data Bits	Address Bits	Parity Bits	Stop Bit
1	9	0	0	1
1	8	0	1	1
1	8	1[1]	0	1

1. The address bit identifies the frame as an address character. See Section 11.4.6.6, “Receiver Wakeup”.

11.4.4 Baud Rate Generation

A 13-bit modulus counter in the baud rate generator derives the baud rate for both the receiver and the transmitter. The value from 0 to 8191 written to the SBR12:SBR0 bits determines the bus clock divisor. The SBR bits are in the SCI baud rate registers (SCIBDH and SCIBDL). The baud rate clock is synchronized with the bus clock and drives the receiver. The baud rate clock divided by 16 drives the transmitter. The receiver has an acquisition rate of 16 samples per bit time.

Baud rate generation is subject to one source of error:

- Integer division of the bus clock may not give the exact target frequency.

Table 11-16 lists some examples of achieving target baud rates with a bus clock frequency of 25 MHz.

When IREN = 0 then,

SCI baud rate = SCI bus clock / (16 * SCIBR[12:0])

Table 11-16. Baud Rates (Example: Bus Clock = 25 MHz)

Bits SBR[12:0]	Receiver Clock (Hz)	Transmitter Clock (Hz)	Target Baud Rate	Error (%)
41	609,756.1	38,109.8	38,400	.76
81	308,642.0	19,290.1	19,200	.47
163	153,374.2	9585.9	9,600	.16
326	76,687.1	4792.9	4,800	.15
651	38,402.5	2400.2	2,400	.01
1302	19,201.2	1200.1	1,200	.01
2604	9600.6	600.0	600	.00
5208	4800.0	300.0	300	.00

11.4.5 Transmitter

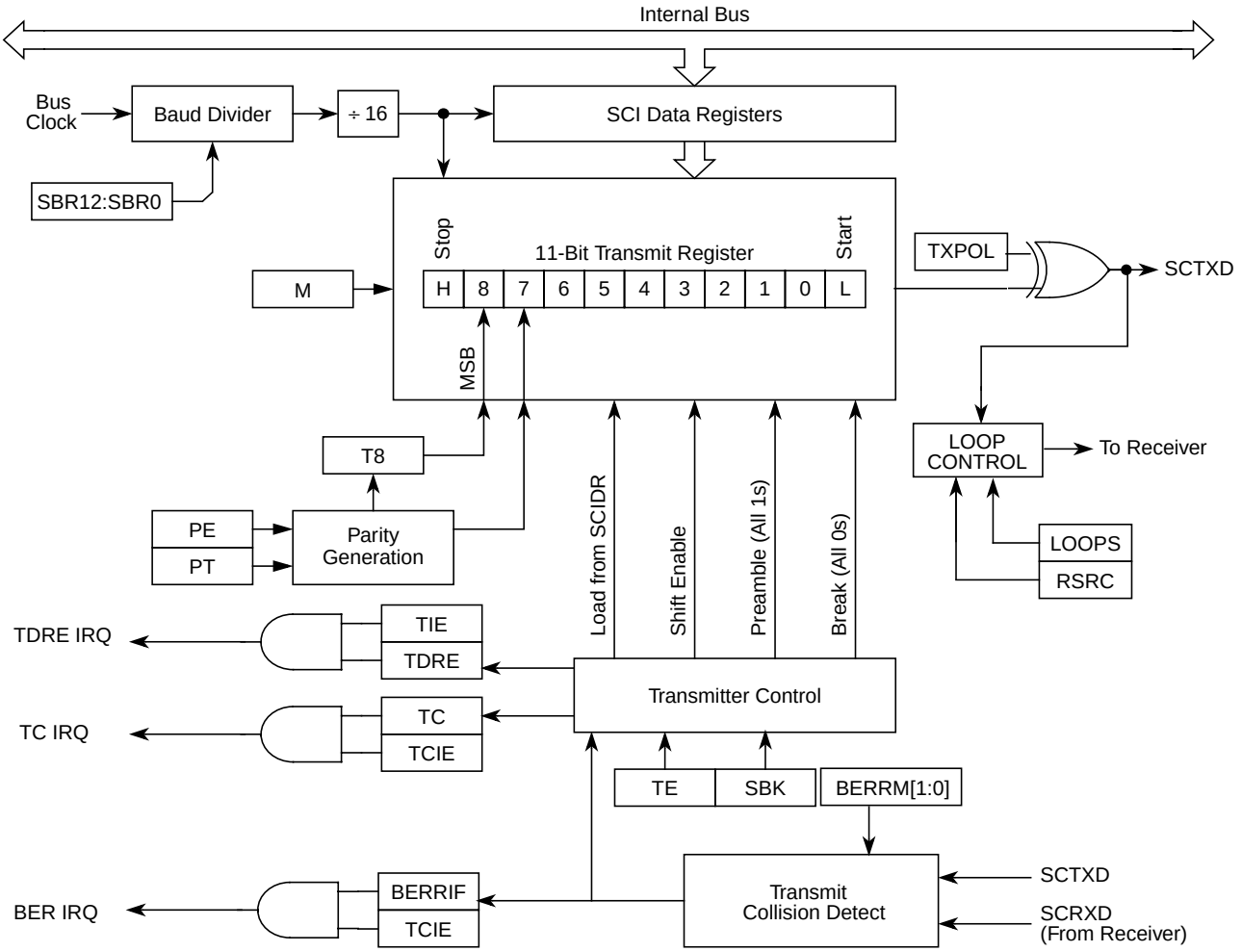

Figure 11-16. Transmitter Block Diagram

11.4.5.1 Transmitter Character Length

The SCI transmitter can accommodate either 8-bit or 9-bit data characters. The state of the M bit in SCI control register 1 (SCICR1) determines the length of data characters. When transmitting 9-bit data, bit T8 in SCI data register high (SCIDRH) is the ninth bit (bit 8).

11.4.5.2 Character Transmission

To transmit data, the MCU writes the data bits to the SCI data registers (SCIDRH/SCIDRL), which in turn are transferred to the transmitter shift register. The transmit shift register then shifts a frame out through the TXD pin, after it has prefaced them with a start bit and appended them with a stop bit. The SCI data registers (SCIDRH and SCIDRL) are the write-only buffers between the internal data bus and the transmit shift register.

The SCI also sets a flag, the transmit data register empty flag (TDRE), every time it transfers data from the buffer (SCIDRH/L) to the transmitter shift register.The transmit driver routine may respond to this flag by writing another byte to the Transmitter buffer (SCIDRH/SCIDRL), while the shift register is still shifting out the first byte.

To initiate an SCI transmission:

1. Configure the SCI:
   a) Select a baud rate. Write this value to the SCI baud registers (SCIBDH/L) to begin the baud rate generator. Remember that the baud rate generator is disabled when the baud rate is zero. Writing to the SCIBDH has no effect without also writing to SCIBDL.
   b) Write to SCICR1 to configure word length, parity, and other configuration bits (LOOPS,RSRC,M,WAKE,ILT,PE,PT).
   c) Enable the transmitter, interrupts, receive, and wake up as required, by writing to the SCICR2 register bits (TIE,TCIE,RIE,ILIE,TE,RE,RWU,SBK). A preamble or idle character will now be shifted out of the transmitter shift register.
2. Transmit Procedure for each byte:
   a) Poll the TDRE flag by reading the SCISR1 or responding to the TDRE interrupt. Keep in mind that the TDRE bit resets to one.
   b) If the TDRE flag is set, write the data to be transmitted to SCIDRH/L, where the ninth bit is written to the T8 bit in SCIDRH if the SCI is in 9-bit data format. A new transmission will not result until the TDRE flag has been cleared.
3. Repeat step 2 for each subsequent transmission.

NOTE

The TDRE flag is set when the shift register is loaded with the next data to be transmitted from SCIDRH/L, which happens, generally speaking, a little over half-way through the stop bit of the previous frame. Specifically, this transfer occurs 9/16ths of a bit time AFTER the start of the stop bit of the previous frame.

Writing the TE bit from 0 to a 1 automatically loads the transmit shift register with a preamble of 10 logic 1s (if M = 0) or 11 logic 1s (if M = 1). After the preamble shifts out, control logic transfers the data from the SCI data register into the transmit shift register. A logic 0 start bit automatically goes into the least significant bit position of the transmit shift register. A logic 1 stop bit goes into the most significant bit position.

Hardware supports odd or even parity. When parity is enabled, the most significant bit (MSB) of the data character is the parity bit.

The transmit data register empty flag, TDRE, in SCI status register 1 (SCISR1) becomes set when the SCI data register transfers a byte to the transmit shift register. The TDRE flag indicates that the SCI data register can accept new data from the internal data bus. If the transmit interrupt enable bit, TIE, in SCI control register 2 (SCICR2) is also set, the TDRE flag generates a transmitter interrupt request.

When the transmit shift register is not transmitting a frame, the TXD pin goes to the idle condition, logic 1. If at any time software clears the TE bit in SCI control register 2 (SCICR2), the transmitter enable signal goes low and the transmit signal goes idle.

If software clears TE while a transmission is in progress (TC = 0), the frame in the transmit shift register continues to shift out. To avoid accidentally cutting off the last frame in a message, always wait for TDRE to go high after the last frame before clearing TE.

To separate messages with preambles with minimum idle line time, use this sequence between messages:

1. Write the last byte of the first message to SCIDRH/L.
2. Wait for the TDRE flag to go high, indicating the transfer of the last frame to the transmit shift register.
3. Queue a preamble by clearing and then setting the TE bit.
4. Write the first byte of the second message to SCIDRH/L.

11.4.5.3 Break Characters

Writing a logic 1 to the send break bit, SBK, in SCI control register 2 (SCICR2) loads the transmit shift register with a break character. A break character contains all logic 0s and has no start, stop, or parity bit. Break character length depends on the M bit in SCI control register 1 (SCICR1). As long as SBK is at logic 1, transmitter logic continuously loads break characters into the transmit shift register. After software clears the SBK bit, the shift register finishes transmitting the last break character and then transmits at least one logic 1. The automatic logic 1 at the end of a break character guarantees the recognition of the start bit of the next frame.

The SCI recognizes a break character when there are 10 or 11(M = 0 or M = 1) consecutive zero received. Depending if the break detect feature is enabled or not receiving a break character has these effects on SCI registers.

If the break detect feature is disabled (BKDFE = 0):

- Sets the framing error flag, FE
- Sets the receive data register full flag, RDRF
- Clears the SCI data registers (SCIDRH/L)
- May set the overrun flag, OR, noise flag, NF, parity error flag, PE, or the receiver active flag, RAF (see 3.4.4 and 3.4.5 SCI Status Register 1 and 2)

If the break detect feature is enabled (BKDFE = 1) there are two scenarios[1]

The break is detected right from a start bit or is detected during a byte reception.

- Sets the break detect interrupt flag, BLDIF
- Does not change the data register full flag, RDRF or overrun flag OR
- Does not change the framing error flag FE, parity error flag PE.
- Does not clear the SCI data registers (SCIDRH/L)
- May set noise flag NF, or receiver active flag RAF.

1. A Break character in this context are either 10 or 11 consecutive zero received bits

Figure 11-17 shows two cases of break detect. In trace RXD_1 the break symbol starts with the start bit, while in RXD_2 the break starts in the middle of a transmission. If BRKDFE = 1, in RXD_1 case there will be no byte transferred to the receive buffer and the RDRF flag will not be modified. Also no framing error or parity error will be flagged from this transfer. In RXD_2 case, however the break signal starts later during the transmission. At the expected stop bit position the byte received so far will be transferred to the receive buffer, the receive data register full flag will be set, a framing error and if enabled and appropriate a parity error will be set. Once the break is detected the BRKDIF flag will be set.

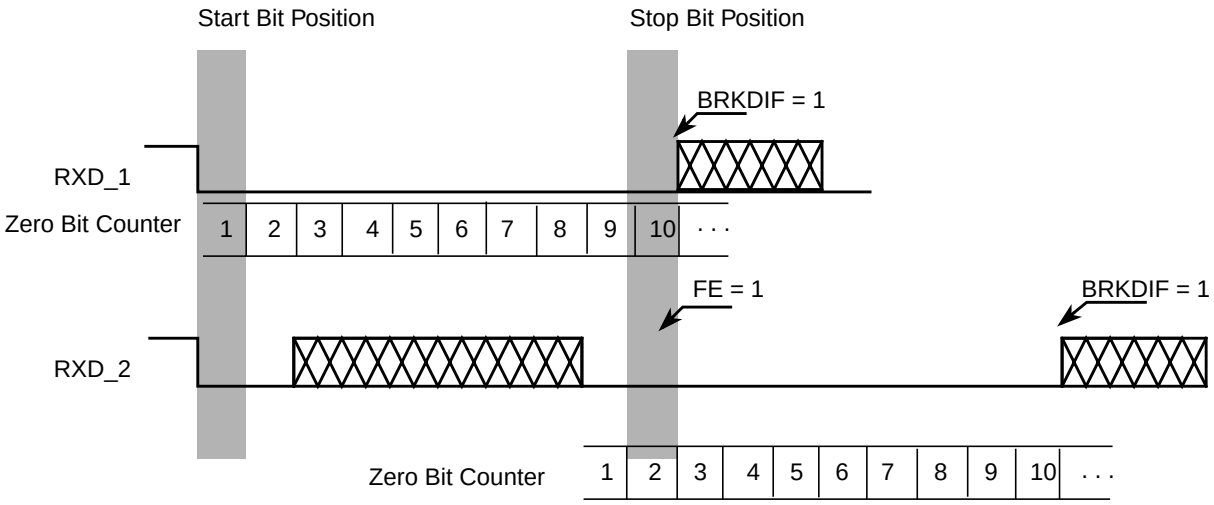

Figure 11-17. Break Detection if BRKDFE = 1 (M = 0)

11.4.5.4 Idle Characters

An idle character (or preamble) contains all logic 1s and has no start, stop, or parity bit. Idle character length depends on the M bit in SCI control register 1 (SCICR1). The preamble is a synchronizing idle character that begins the first transmission initiated after writing the TE bit from 0 to 1.

If the TE bit is cleared during a transmission, the TXD pin becomes idle after completion of the transmission in progress. Clearing and then setting the TE bit during a transmission queues an idle character to be sent after the frame currently being transmitted.

NOTE

When queueing an idle character, return the TE bit to logic 1 before the stop bit of the current frame shifts out through the TXD pin. Setting TE after the stop bit appears on TXD causes data previously written to the SCI data register to be lost. Toggle the TE bit for a queued idle character while the TDRE flag is set and immediately before writing the next byte to the SCI data register.

If the TE bit is clear and the transmission is complete, the SCI is not the master of the TXD pin

11.4.5.5 LIN Transmit Collision Detection

This module allows to check for collisions on the LIN bus.

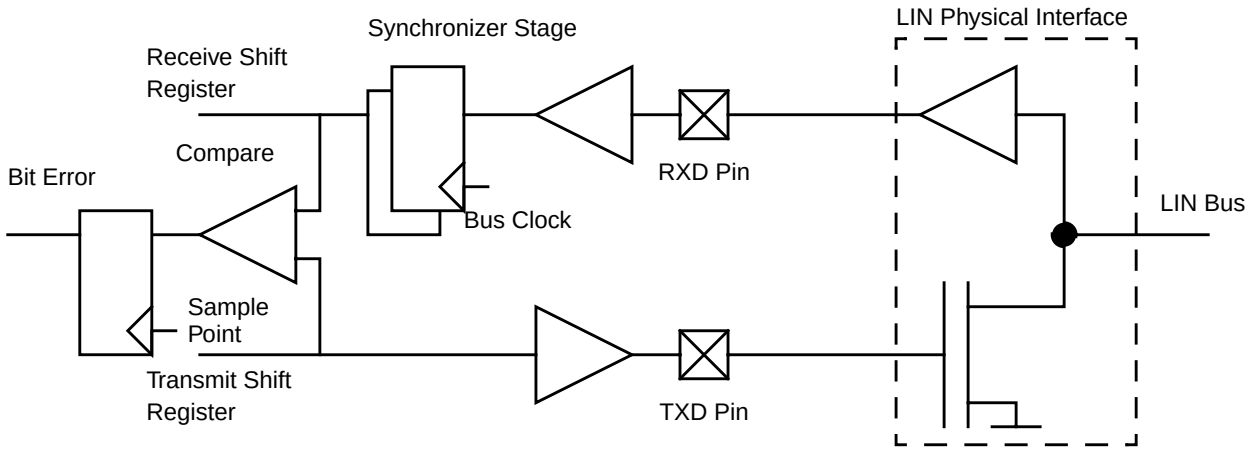

Figure 11-18. Collision Detect Principle

If the bit error circuit is enabled (BERRM[1:0] = 0:1 or = 1:0]), the error detect circuit will compare the transmitted and the received data stream at a point in time and flag any mismatch. The timing checks run when transmitter is active (not idle). As soon as a mismatch between the transmitted data and the received data is detected the following happens:

- The next bit transmitted will have a high level (TXPOL = 0) or low level (TXPOL = 1)
- The transmission is aborted and the byte in transmit buffer is discarded.
- the transmit data register empty and the transmission complete flag will be set
- The bit error interrupt flag, BERRIF, will be set.
- No further transmissions will take place until the BERRIF is cleared.

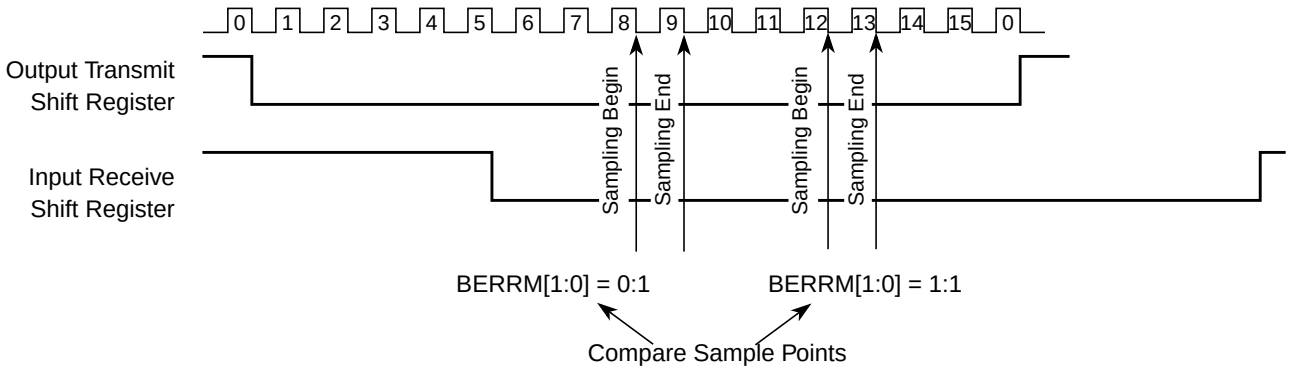

Figure 11-19. Timing Diagram Bit Error Detection

If the bit error detect feature is disabled, the bit error interrupt flag is cleared.

NOTE

The RXPOL and TXPOL bit should be set the same when transmission collision detect feature is enabled, otherwise the bit error interrupt flag may be set incorrectly.

11.4.6 Receiver

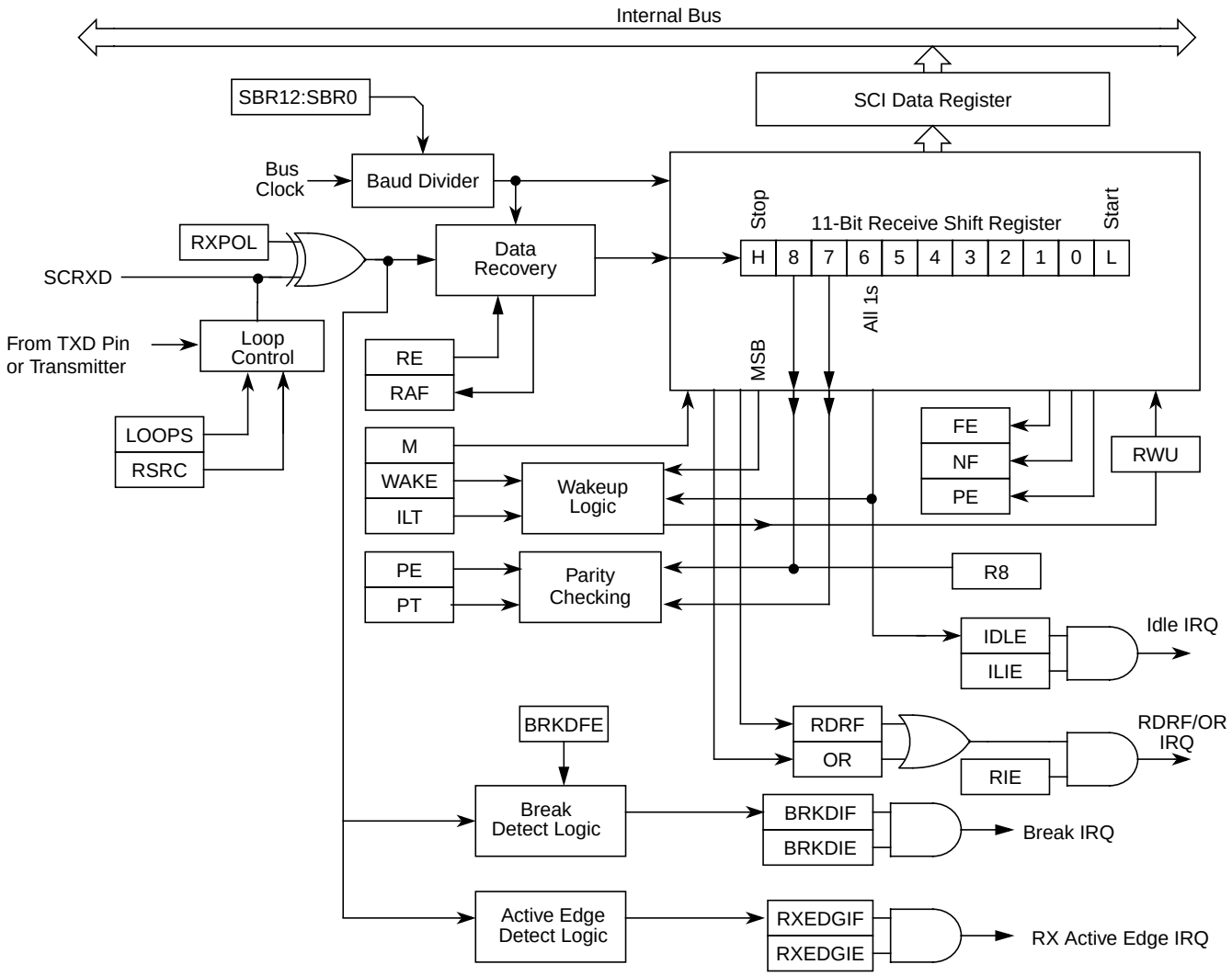

Figure 11-20. SCI Receiver Block Diagram

11.4.6.1 Receiver Character Length

The SCI receiver can accommodate either 8-bit or 9-bit data characters. The state of the M bit in SCI control register 1 (SCICR1) determines the length of data characters. When receiving 9-bit data, bit R8 in SCI data register high (SCIDRH) is the ninth bit (bit 8).

11.4.6.2 Character Reception

During an SCI reception, the receive shift register shifts a frame in from the RXD pin. The SCI data register is the read-only buffer between the internal data bus and the receive shift register.

After a complete frame shifts into the receive shift register, the data portion of the frame transfers to the SCI data register. The receive data register full flag, RDRF, in SCI status register 1 (SCISR1) becomes set,

indicating that the received byte can be read. If the receive interrupt enable bit, RIE, in SCI control register 2 (SCICR2) is also set, the RDRF flag generates an RDRF interrupt request.

11.4.6.3 Data Sampling

The RT clock rate. The RT clock is an internal signal with a frequency 16 times the baud rate. To adjust for baud rate mismatch, the RT clock (see Figure 11-21) is re-synchronized:

- After every start bit
- After the receiver detects a data bit change from logic 1 to logic 0 (after the majority of data bit samples at RT8, RT9, and RT10 returns a valid logic 1 and the majority of the next RT8, RT9, and RT10 samples returns a valid logic 0)

To locate the start bit, data recovery logic does an asynchronous search for a logic 0 preceded by three logic 1s.When the falling edge of a possible start bit occurs, the RT clock begins to count to 16.

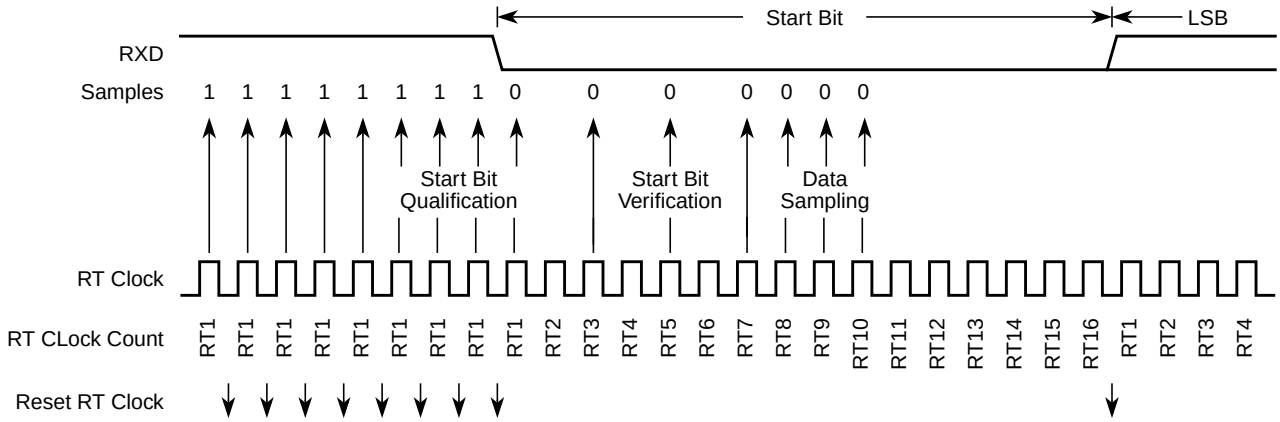

Figure 11-21. Receiver Data Sampling

To verify the start bit and to detect noise, data recovery logic takes samples at RT3, RT5, and RT7. Figure 11-17 summarizes the results of the start bit verification samples.

Table 11-17. Start Bit Verification

RT3, RT5, and RT7 Samples	Start Bit Verification	Noise Flag
000	Yes	0
001	Yes	1
010	Yes	1
011	No	0
100	Yes	1
101	No	0
110	No	0
111	No	0

If start bit verification is not successful, the RT clock is reset and a new search for a start bit begins.

To determine the value of a data bit and to detect noise, recovery logic takes samples at RT8, RT9, and RT10. Table 11-18 summarizes the results of the data bit samples.

Table 11-18. Data Bit Recovery

RT8, RT9, and RT10 Samples	Data Bit Determination	Noise Flag
000	0	0
001	0	1
010	0	1
011	1	1
100	0	1
101	1	1
110	1	1
111	1	0

NOTE

The RT8, RT9, and RT10 samples do not affect start bit verification. If any or all of the RT8, RT9, and RT10 start bit samples are logic 1s following a successful start bit verification, the noise flag (NF) is set and the receiver assumes that the bit is a start bit (logic 0).

To verify a stop bit and to detect noise, recovery logic takes samples at RT8, RT9, and RT10. Table 11-19 summarizes the results of the stop bit samples.

Table 11-19. Stop Bit Recovery

RT8, RT9, and RT10 Samples	Framing Error Flag	Noise Flag
000	1	0
001	1	1
010	1	1
011	0	1
100	1	1
101	0	1
110	0	1
111	0	0

In Figure 11-22 the verification samples RT3 and RT5 determine that the first low detected was noise and not the beginning of a start bit. The RT clock is reset and the start bit search begins again. The noise flag is not set because the noise occurred before the start bit was found.

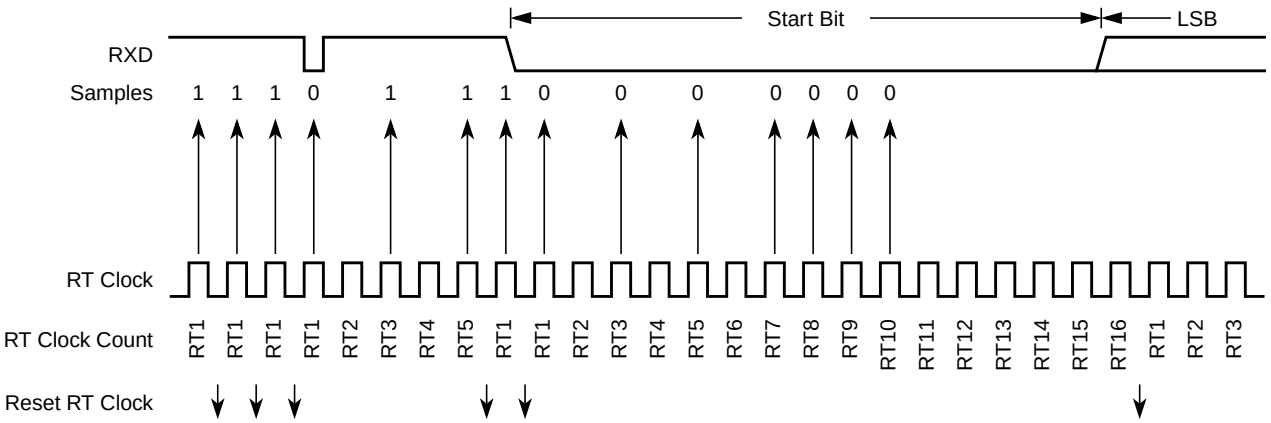

Figure 11-22. Start Bit Search Example 1

In Figure 11-23, verification sample at RT3 is high. The RT3 sample sets the noise flag. Although the perceived bit time is misaligned, the data samples RT8, RT9, and RT10 are within the bit time and data recovery is successful.

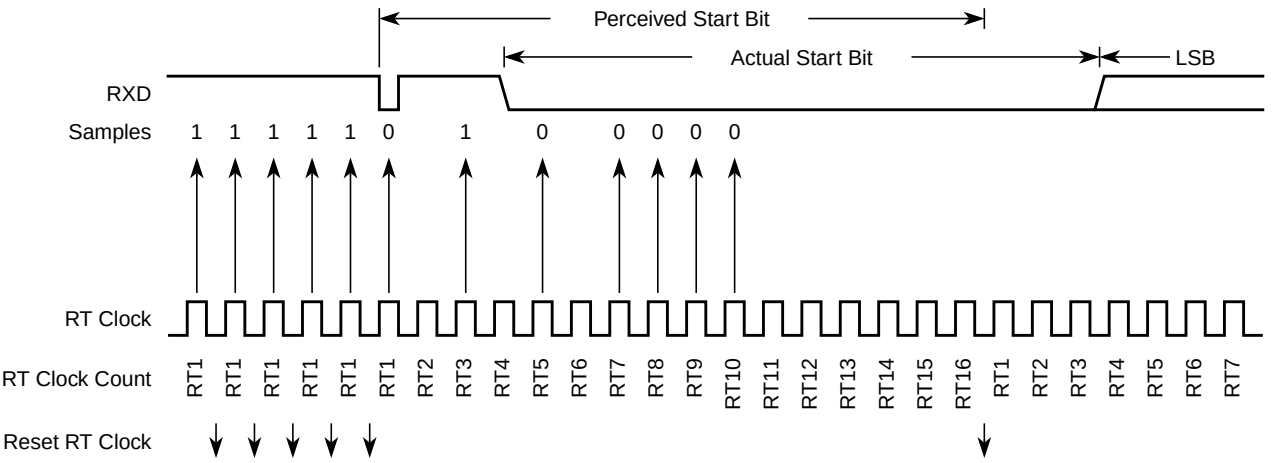

Figure 11-23. Start Bit Search Example 2

In Figure 11-24, a large burst of noise is perceived as the beginning of a start bit, although the test sample at RT5 is high. The RT5 sample sets the noise flag. Although this is a worst-case misalignment of perceived bit time, the data samples RT8, RT9, and RT10 are within the bit time and data recovery is successful.

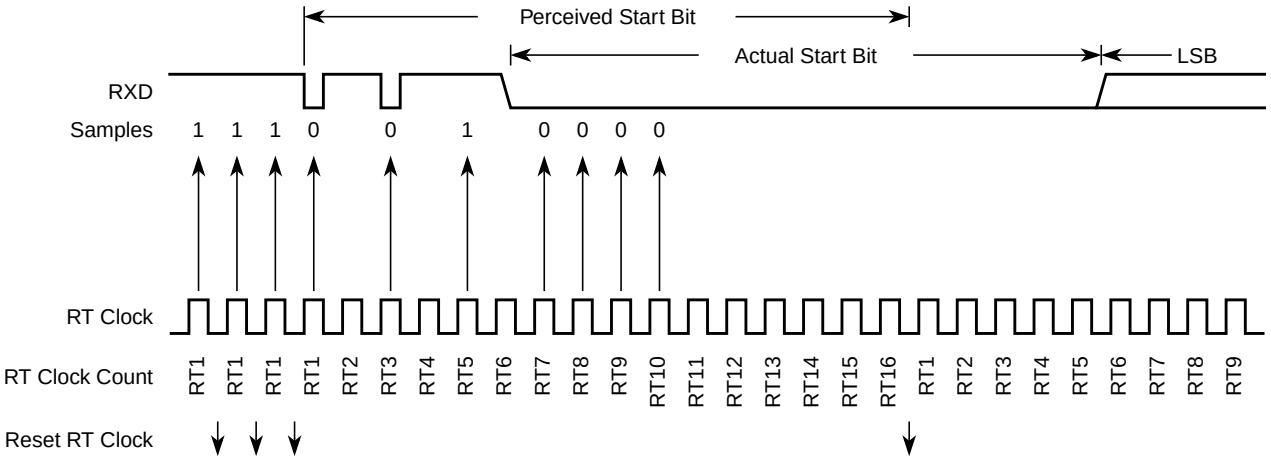

Figure 11-24. Start Bit Search Example 3

Figure 11-25 shows the effect of noise early in the start bit time. Although this noise does not affect proper synchronization with the start bit time, it does set the noise flag.

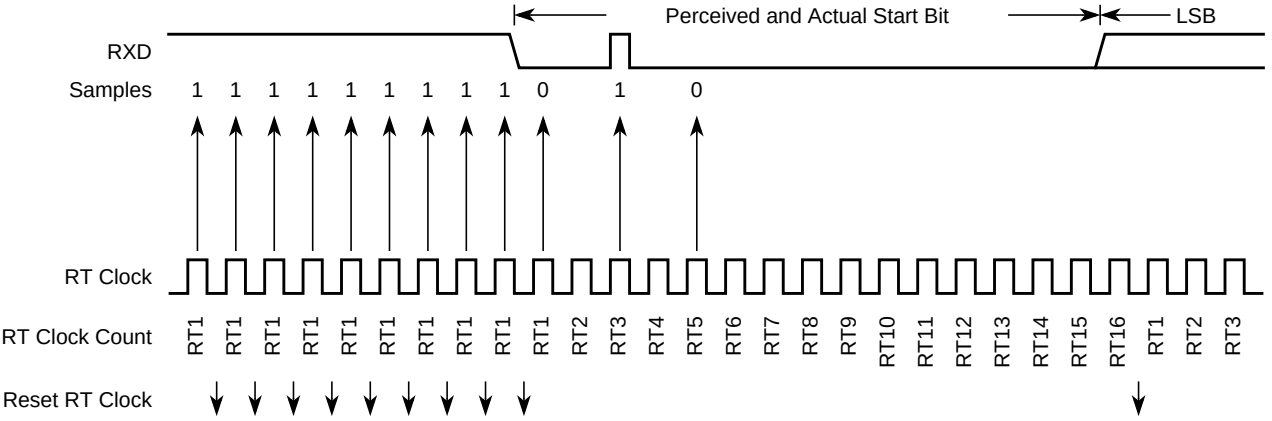

Figure 11-25. Start Bit Search Example 4

Figure 11-26 shows a burst of noise near the beginning of the start bit that resets the RT clock. The sample after the reset is low but is not preceded by three high samples that would qualify as a falling edge. Depending on the timing of the start bit search and on the data, the frame may be missed entirely or it may set the framing error flag.

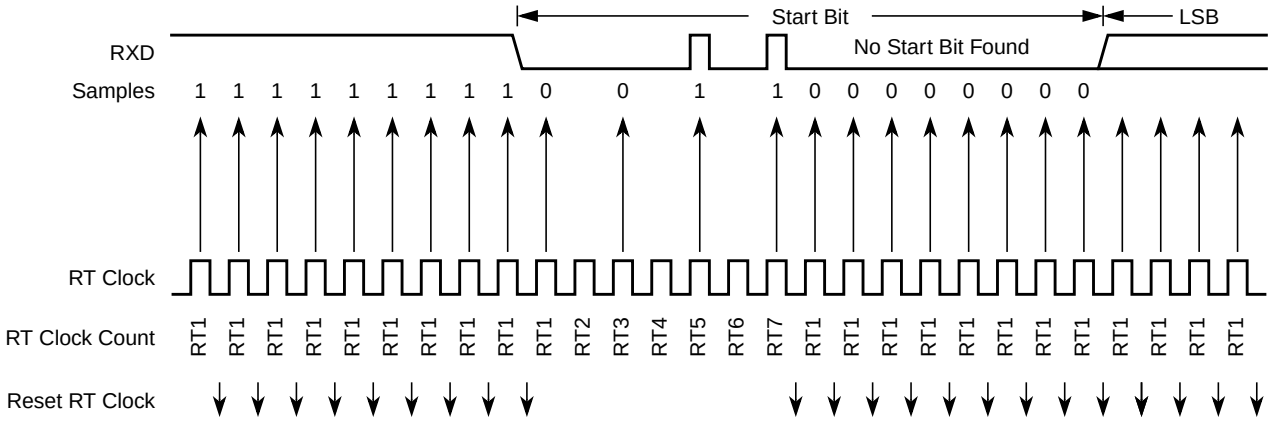

Figure 11-26. Start Bit Search Example 5

In Figure 11-27, a noise burst makes the majority of data samples RT8, RT9, and RT10 high. This sets the noise flag but does not reset the RT clock. In start bits only, the RT8, RT9, and RT10 data samples are ignored.

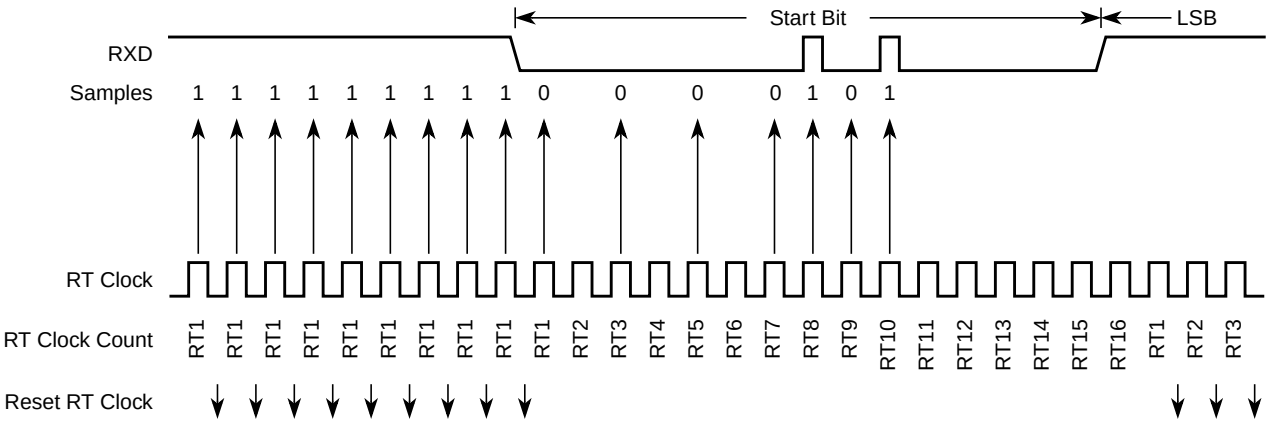

Figure 11-27. Start Bit Search Example 6

11.4.6.4 Framing Errors

If the data recovery logic does not detect a logic 1 where the stop bit should be in an incoming frame, it sets the framing error flag, FE, in SCI status register 1 (SCISR1). A break character also sets the FE flag because a break character has no stop bit. The FE flag is set at the same time that the RDRF flag is set.

11.4.6.5 Baud Rate Tolerance

A transmitting device may be operating at a baud rate below or above the receiver baud rate. Accumulated bit time misalignment can cause one of the three stop bit data samples (RT8, RT9, and RT10) to fall outside the actual stop bit. A noise error will occur if the RT8, RT9, and RT10 samples are not all the same logical values. A framing error will occur if the receiver clock is misaligned in such a way that the majority of the RT8, RT9, and RT10 stop bit samples are a logic zero.

As the receiver samples an incoming frame, it re-synchronizes the RT clock on any valid falling edge within the frame. Re synchronization within frames will correct a misalignment between transmitter bit times and receiver bit times.

11.4.6.5.1 Slow Data Tolerance

Figure 11-28 shows how much a slow received frame can be misaligned without causing a noise error or a framing error. The slow stop bit begins at RT8 instead of RT1 but arrives in time for the stop bit data samples at RT8, RT9, and RT10.

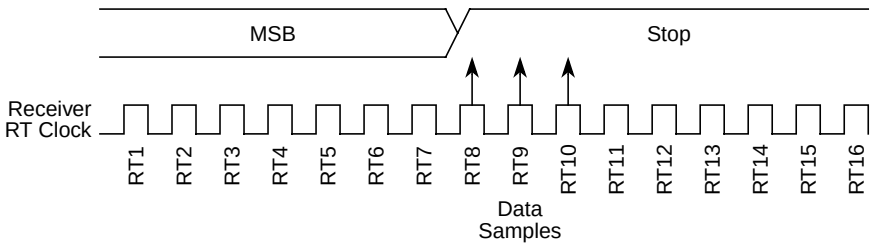

Figure 11-28. Slow Data

Let’s take RTr as receiver RT clock and RTt as transmitter RT clock.

For an 8-bit data character, it takes the receiver 9 bit times x 16 RTr cycles +7 RTr cycles = 151 RTr cycles to start data sampling of the stop bit.

With the misaligned character shown in Figure 11-28, the receiver counts 151 RTr cycles at the point when the count of the transmitting device is 9 bit times x 16 RTt cycles = 144 RTt cycles.

The maximum percent difference between the receiver count and the transmitter count of a slow 8-bit data character with no errors is:

((151 – 144) / 151) x 100 = 4.63%

For a 9-bit data character, it takes the receiver 10 bit times x 16 RTr cycles + 7 RTr cycles = 167 RTr cycles to start data sampling of the stop bit.

With the misaligned character shown in Figure 11-28, the receiver counts 167 RTr cycles at the point when the count of the transmitting device is 10 bit times x 16 RTt cycles = 160 RTt cycles.

The maximum percent difference between the receiver count and the transmitter count of a slow 9-bit character with no errors is:

((167 – 160) / 167) X 100 = 4.19%

11.4.6.5.2 Fast Data Tolerance

Figure 11-29 shows how much a fast received frame can be misaligned. The fast stop bit ends at RT10 instead of RT16 but is still sampled at RT8, RT9, and RT10.

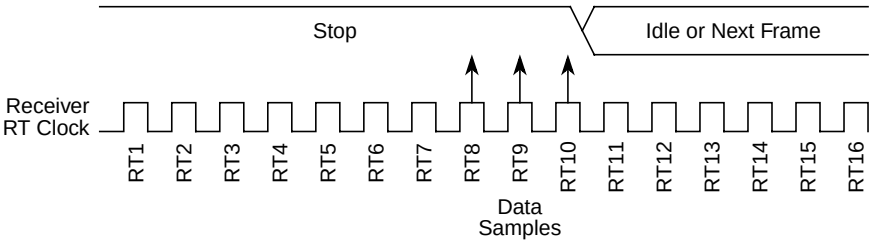

Figure 11-29. Fast Data

For an 8-bit data character, it takes the receiver 9 bit times x 16 RTr cycles + 10 RTr cycles = 154 RTr cycles to finish data sampling of the stop bit.

With the misaligned character shown in Figure 11-29, the receiver counts 154 RTr cycles at the point when the count of the transmitting device is 10 bit times x 16 RTt cycles = 160 RTt cycles.

The maximum percent difference between the receiver count and the transmitter count of a fast 8-bit character with no errors is:

((160 – 154) / 160) x 100 = 3.75%

For a 9-bit data character, it takes the receiver 10 bit times x 16 RTr cycles + 10 RTr cycles = 170 RTr cycles to finish data sampling of the stop bit.

With the misaligned character shown in Figure 11-29, the receiver counts 170 RTr cycles at the point when the count of the transmitting device is 11 bit times x 16 RTt cycles = 176 RTt cycles.

The maximum percent difference between the receiver count and the transmitter count of a fast 9-bit character with no errors is:

((176 – 170) /176) x 100 = 3.40%

11.4.6.6 Receiver Wakeup

To enable the SCI to ignore transmissions intended only for other receivers in multiple-receiver systems, the receiver can be put into a standby state. Setting the receiver wakeup bit, RWU, in SCI control register 2 (SCICR2) puts the receiver into standby state during which receiver interrupts are disabled.The SCI will still load the receive data into the SCIDRH/L registers, but it will not set the RDRF flag.

The transmitting device can address messages to selected receivers by including addressing information in the initial frame or frames of each message.

The WAKE bit in SCI control register 1 (SCICR1) determines how the SCI is brought out of the standby state to process an incoming message. The WAKE bit enables either idle line wakeup or address mark wakeup.

11.4.6.6.1 Idle Input line Wakeup (WAKE = 0)

In this wakeup method, an idle condition on the RXD pin clears the RWU bit and wakes up the SCI. The initial frame or frames of every message contain addressing information. All receivers evaluate the addressing information, and receivers for which the message is addressed process the frames that follow. Any receiver for which a message is not addressed can set its RWU bit and return to the standby state. The

RWU bit remains set and the receiver remains on standby until another idle character appears on the RXD pin.

Idle line wakeup requires that messages be separated by at least one idle character and that no message contains idle characters.

The idle character that wakes a receiver does not set the receiver idle bit, IDLE, or the receive data register full flag, RDRF.

The idle line type bit, ILT, determines whether the receiver begins counting logic 1s as idle character bits after the start bit or after the stop bit. ILT is in SCI control register 1 (SCICR1).

11.4.6.6.2 Address Mark Wakeup (WAKE = 1)

In this wakeup method, a logic 1 in the most significant bit (MSB) position of a frame clears the RWU bit and wakes up the SCI. The logic 1 in the MSB position marks a frame as an address frame that contains addressing information. All receivers evaluate the addressing information, and the receivers for which the message is addressed process the frames that follow.Any receiver for which a message is not addressed can set its RWU bit and return to the standby state. The RWU bit remains set and the receiver remains on standby until another address frame appears on the RXD pin.

The logic 1 MSB of an address frame clears the receiver's RWU bit before the stop bit is received and sets the RDRF flag.

Address mark wakeup allows messages to contain idle characters but requires that the MSB be reserved for use in address frames.

NOTE

With the WAKE bit clear, setting the RWU bit after the RXD pin has been idle can cause the receiver to wake up immediately.

11.4.7 Single-Wire Operation

Normally, the SCI uses two pins for transmitting and receiving. In single-wire operation, the RXD pin is disconnected from the SCI. The SCI uses the TXD pin for both receiving and transmitting.

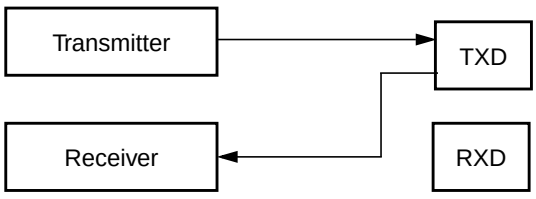

Figure 11-30. Single-Wire Operation (LOOPS = 1, RSRC = 1)

Enable single-wire operation by setting the LOOPS bit and the receiver source bit, RSRC, in SCI control register 1 (SCICR1). Setting the LOOPS bit disables the path from the RXD pin to the receiver. Setting the RSRC bit connects the TXD pin to the receiver. Both the transmitter and receiver must be enabled (TE = 1 and RE = 1).The TXDIR bit (SCISR2[1]) determines whether the TXD pin is going to be used as an input (TXDIR = 0) or an output (TXDIR = 1) in this mode of operation.

NOTE

In single-wire operation data from the TXD pin is inverted if RXPOL is set.

11.4.8 Loop Operation

In loop operation the transmitter output goes to the receiver input. The RXD pin is disconnected from the SCI.

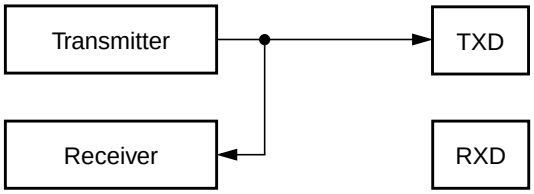

Figure 11-31. Loop Operation (LOOPS = 1, RSRC = 0)

Enable loop operation by setting the LOOPS bit and clearing the RSRC bit in SCI control register 1 (SCICR1). Setting the LOOPS bit disables the path from the RXD pin to the receiver. Clearing the RSRC bit connects the transmitter output to the receiver input. Both the transmitter and receiver must be enabled (TE = 1 and RE = 1).

NOTE

In loop operation data from the transmitter is not recognized by the receiver if RXPOL and TXPOL are not the same.

11.5 Initialization/Application Information

11.5.1 Reset Initialization

See Section 11.3.2, “Register Descriptions”.

11.5.2 Modes of Operation

11.5.2.1 Run Mode

Normal mode of operation.

To initialize a SCI transmission, see Section 11.4.5.2, “Character Transmission”.

11.5.2.2 Wait Mode

SCI operation in wait mode depends on the state of the SCISWAI bit in the SCI control register 1 (SCICR1).

- If SCISWAI is clear, the SCI operates normally when the CPU is in wait mode.
- If SCISWAI is set, SCI clock generation ceases and the SCI module enters a power-conservation state when the CPU is in wait mode. Setting SCISWAI does not affect the state of the receiver enable bit, RE, or the transmitter enable bit, TE.

If SCISWAI is set, any transmission or reception in progress stops at wait mode entry. The transmission or reception resumes when either an internal or external interrupt brings the CPU out of wait mode. Exiting wait mode by reset aborts any transmission or reception in progress and resets the SCI.

11.5.2.3 Stop Mode

The SCI is inactive during stop mode for reduced power consumption. The STOP instruction does not affect the SCI register states, but the SCI bus clock will be disabled. The SCI operation resumes from where it left off after an external interrupt brings the CPU out of stop mode. Exiting stop mode by reset aborts any transmission or reception in progress and resets the SCI.

The receive input active edge detect circuit is still active in stop mode. An active edge on the receive input can be used to bring the CPU out of stop mode.

11.5.3 Interrupt Operation

This section describes the interrupt originated by the SCI block.The MCU must service the interrupt requests. Table 11-20 lists the eight interrupt sources of the SCI.

Table 11-20. SCI Interrupt Sources

Interrupt	Source	Local Enable	Description
TDRE	SCISR1[7]	TIE	Active high level. Indicates that a byte was transferred from SCIDRH/L to the transmit shift register.
TC	SCISR1[6]	TCIE	Active high level. Indicates that a transmit is complete.
RDRF	SCISR1[5]	RIE	Active high level. The RDRF interrupt indicates that received data is available in the SCI data register.
OR	SCISR1[3]		Active high level. This interrupt indicates that an overrun condition has occurred.
IDLE	SCISR1[4]	ILIE	Active high level. Indicates that receiver input has become idle.
RXEDGIF	SCIASR1[7]	RXEDGIE	Active high level. Indicates that an active edge (falling for RXPOL = 0, rising for RXPOL = 1) was detected.
BERRIF	SCIASR1[1]	BERRIE	Active high level. Indicates that a mismatch between transmitted and received data in a single wire application has happened.
BKDIF	SCIASR1[0]	BRKDIE	Active high level. Indicates that a break character has been received.

11.5.3.1 Description of Interrupt Operation

The SCI only originates interrupt requests. The following is a description of how the SCI makes a request and how the MCU should acknowledge that request. The interrupt vector offset and interrupt number are chip dependent. The SCI only has a single interrupt line (SCI Interrupt Signal, active high operation) and all the following interrupts, when generated, are ORed together and issued through that port.

11.5.3.1.1 TDRE Description

The TDRE interrupt is set high by the SCI when the transmit shift register receives a byte from the SCI data register. A TDRE interrupt indicates that the transmit data register (SCIDRH/L) is empty and that a

new byte can be written to the SCIDRH/L for transmission.Clear TDRE by reading SCI status register 1 with TDRE set and then writing to SCI data register low (SCIDRL).

11.5.3.1.2 TC Description

The TC interrupt is set by the SCI when a transmission has been completed. Transmission is completed when all bits including the stop bit (if transmitted) have been shifted out and no data is queued to be transmitted. No stop bit is transmitted when sending a break character and the TC flag is set (providing there is no more data queued for transmission) when the break character has been shifted out. A TC interrupt indicates that there is no transmission in progress. TC is set high when the TDRE flag is set and no data, preamble, or break character is being transmitted. When TC is set, the TXD pin becomes idle (logic 1). Clear TC by reading SCI status register 1 (SCISR1) with TC set and then writing to SCI data register low (SCIDRL).TC is cleared automatically when data, preamble, or break is queued and ready to be sent.

11.5.3.1.3 RDRF Description

The RDRF interrupt is set when the data in the receive shift register transfers to the SCI data register. A RDRF interrupt indicates that the received data has been transferred to the SCI data register and that the byte can now be read by the MCU. The RDRF interrupt is cleared by reading the SCI status register one (SCISR1) and then reading SCI data register low (SCIDRL).

11.5.3.1.4 OR Description

The OR interrupt is set when software fails to read the SCI data register before the receive shift register receives the next frame. The newly acquired data in the shift register will be lost in this case, but the data already in the SCI data registers is not affected. The OR interrupt is cleared by reading the SCI status register one (SCISR1) and then reading SCI data register low (SCIDRL).

11.5.3.1.5 IDLE Description

The IDLE interrupt is set when 10 consecutive logic 1s (if M = 0) or 11 consecutive logic 1s (if M = 1) appear on the receiver input. Once the IDLE is cleared, a valid frame must again set the RDRF flag before an idle condition can set the IDLE flag. Clear IDLE by reading SCI status register 1 (SCISR1) with IDLE set and then reading SCI data register low (SCIDRL).

11.5.3.1.6 RXEDGIF Description

The RXEDGIF interrupt is set when an active edge (falling if RXPOL = 0, rising if RXPOL = 1) on the RXD pin is detected. Clear RXEDGIF by writing a “1” to the SCIASR1 SCI alternative status register 1.

11.5.3.1.7 BERRIF Description

The BERRIF interrupt is set when a mismatch between the transmitted and the received data in a single wire application like LIN was detected. Clear BERRIF by writing a “1” to the SCIASR1 SCI alternative status register 1. This flag is also cleared if the bit error detect feature is disabled.

11.5.3.1.8 BKDIF Description

The BKDIF interrupt is set when a break signal was received. Clear BKDIF by writing a “1” to the SCIASR1 SCI alternative status register 1. This flag is also cleared if break detect feature is disabled.

11.5.4 Recovery from Wait Mode

The SCI interrupt request can be used to bring the CPU out of wait mode.

11.5.5 Recovery from Stop Mode

An active edge on the receive input can be used to bring the CPU out of stop mode.

Chapter 12
Serial Peripheral Interface (S12SPIV5)

Table 12-1. Revision History

Revision Number	Revision Date	Sections Affected	Description of Changes
V05.00	24 Mar 2005	12.3.2/12-403	- Added 16-bit transfer width feature.

12.1 Introduction

The SPI module allows a duplex, synchronous, serial communication between the MCU and peripheral devices. Software can poll the SPI status flags or the SPI operation can be interrupt driven.

12.1.1 Glossary of Terms

SPI	Serial Peripheral Interface
$\overline{SS}$	Slave Select
SCK	Serial Clock
MOSI	Master Output, Slave Input
MISO	Master Input, Slave Output
MOMI	Master Output, Master Input
SISO	Slave Input, Slave Output

12.1.2 Features

The SPI includes these distinctive features:

- Master mode and slave mode
- Selectable 8 or 16-bit transfer width
- Bidirectional mode
- Slave select output
- Mode fault error flag with CPU interrupt capability
- Double-buffered data register
- Serial clock with programmable polarity and phase
- Control of SPI operation during wait mode

12.1.3 Modes of Operation

The SPI functions in three modes: run, wait, and stop.

- Run mode

  This is the basic mode of operation.
- Wait mode

  SPI operation in wait mode is a configurable low power mode, controlled by the SPISWAI bit located in the SPICR2 register. In wait mode, if the SPISWAI bit is clear, the SPI operates like in run mode. If the SPISWAI bit is set, the SPI goes into a power conservative state, with the SPI clock generation turned off. If the SPI is configured as a master, any transmission in progress stops, but is resumed after CPU goes into run mode. If the SPI is configured as a slave, reception and transmission of data continues, so that the slave stays synchronized to the master.
- Stop mode

  The SPI is inactive in stop mode for reduced power consumption. If the SPI is configured as a master, any transmission in progress stops, but is resumed after CPU goes into run mode. If the SPI is configured as a slave, reception and transmission of data continues, so that the slave stays synchronized to the master.

For a detailed description of operating modes, please refer to Section 12.4.7, “Low Power Mode Options”.

12.1.4 Block Diagram

Figure 12-1 gives an overview on the SPI architecture. The main parts of the SPI are status, control and data registers, shifter logic, baud rate generator, master/slave control logic, and port control logic.

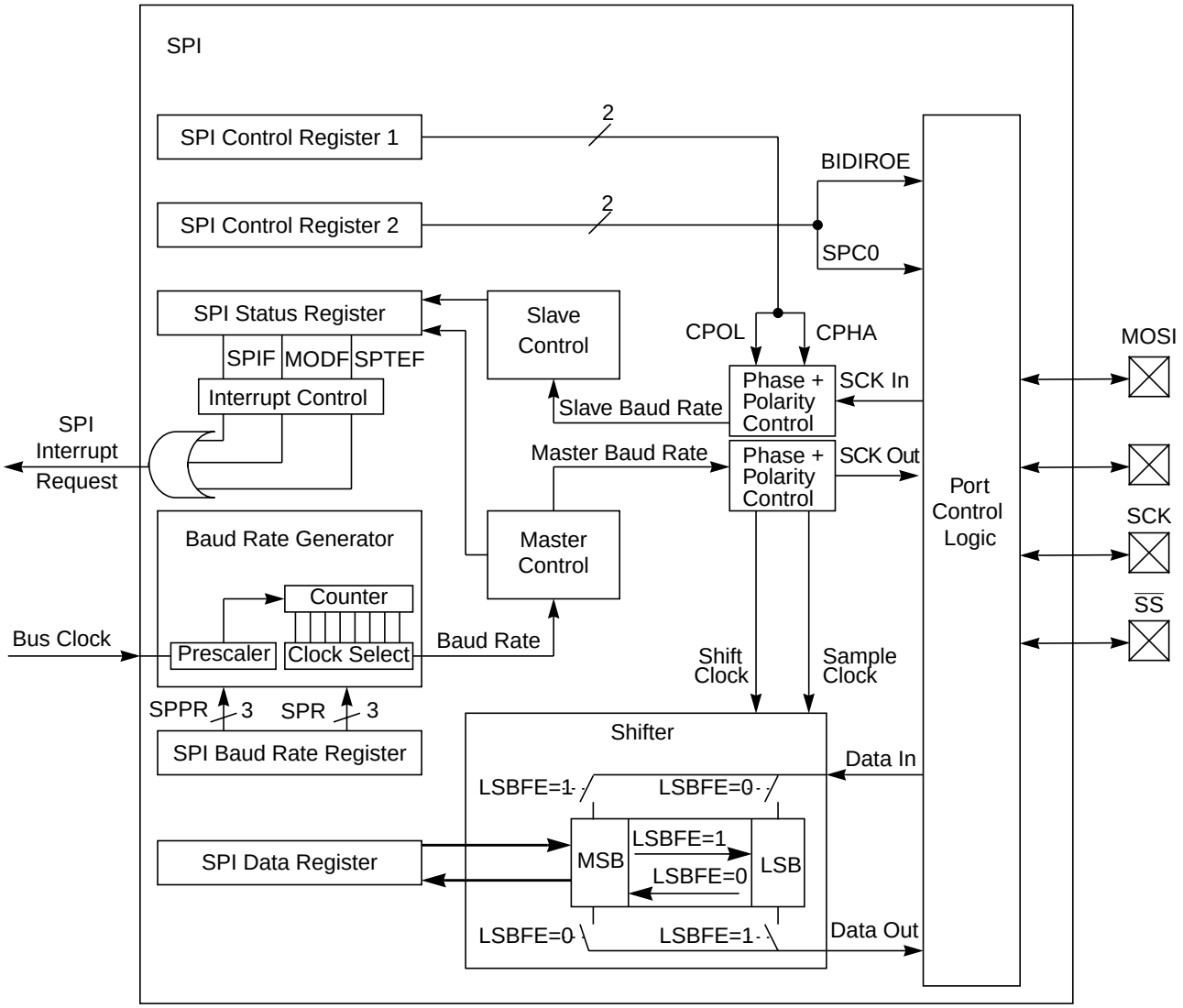

Figure 12-1. SPI Block Diagram

12.2 External Signal Description

This section lists the name and description of all ports including inputs and outputs that do, or may, connect off chip. The SPI module has a total of four external pins.

12.2.1 MOSI — Master Out/Slave In Pin

This pin is used to transmit data out of the SPI module when it is configured as a master and receive data when it is configured as slave.

12.2.2 MISO — Master In/Slave Out Pin

This pin is used to transmit data out of the SPI module when it is configured as a slave and receive data when it is configured as master.

12.2.3 $\overline{SS}$ — Slave Select Pin

This pin is used to output the select signal from the SPI module to another peripheral with which a data transfer is to take place when it is configured as a master and it is used as an input to receive the slave select signal when the SPI is configured as slave.

12.2.4 SCK — Serial Clock Pin

In master mode, this is the synchronous output clock. In slave mode, this is the synchronous input clock.

12.3 Memory Map and Register Definition

This section provides a detailed description of address space and registers used by the SPI.

12.3.1 Module Memory Map

The memory map for the SPI is given in Figure 12-2. The address listed for each register is the sum of a base address and an address offset. The base address is defined at the SoC level and the address offset is defined at the module level. Reads from the reserved bits return zeros and writes to the reserved bits have no effect.

Register Name		Bit 7	6	5	4	3	2	1	Bit 0
0x0000 SPICR1	R	SPIE	SPE	SPTIE	MSTR	CPOL	CPHA	SSOE	LSBFE
	W								
0x0001 SPICR2	R	0	XFRW	0	MODFEN	BIDIROE	0	SPISWAI	SPC0
	W								
0x0002 SPIBR	R	0	SPPR2	SPPR1	SPPR0	0	SPR2	SPR1	SPR0
	W								
0x0003 SPISR	R	SPIF	0	SPTEF	MODF	0	0	0	0
	W								
0x0004 SPIDRH	R	R15	R14	R13	R12	R11	R10	R9	R8
	W	T15	T14	T13	T12	T11	T10	T9	T8
0x0005 SPIDRL	R	R7	R6	R5	R4	R3	R2	R1	R0
	W	T7	T6	T5	T4	T3	T2	T1	T0
0x0006 Reserved	R								
	W								
0x0007 Reserved	R								
	W								

= Unimplemented or Reserved

Figure 12-2. SPI Register Summary

12.3.2 Register Descriptions

This section consists of register descriptions in address order. Each description includes a standard register diagram with an associated figure number. Details of register bit and field function follow the register diagrams, in bit order.

12.3.2.1 SPI Control Register 1 (SPICR1)

Module Base +0x0000

	7	6	5	4	3	2	1	0
R W	SPIE	SPE	SPTIE	MSTR	CPOL	CPHA	SSOE	LSBFE
Reset	0	0	0	0	0	1	0	0

Figure 12-3. SPI Control Register 1 (SPICR1)

Read: Anytime

Write: Anytime

Table 12-2. SPICR1 Field Descriptions

Field	Description
7 SPIE	**SPI Interrupt Enable Bit** — This bit enables SPI interrupt requests, if SPIF or MODF status flag is set. 0 SPI interrupts disabled. 1 SPI interrupts enabled.
6 SPE	**SPI System Enable Bit** — This bit enables the SPI system and dedicates the SPI port pins to SPI system functions. If SPE is cleared, SPI is disabled and forced into idle state, status bits in SPISR register are reset. 0 SPI disabled (lower power consumption). 1 SPI enabled, port pins are dedicated to SPI functions.
5 SPTIE	**SPI Transmit Interrupt Enable** — This bit enables SPI interrupt requests, if SPTEF flag is set. 0 SPTEF interrupt disabled. 1 SPTEF interrupt enabled.
4 MSTR	**SPI Master/Slave Mode Select Bit** — This bit selects whether the SPI operates in master or slave mode. Switching the SPI from master to slave or vice versa forces the SPI system into idle state. 0 SPI is in slave mode. 1 SPI is in master mode.
3 CPOL	**SPI Clock Polarity Bit** — This bit selects an inverted or non-inverted SPI clock. To transmit data between SPI modules, the SPI modules must have identical CPOL values. In master mode, a change of this bit will abort a transmission in progress and force the SPI system into idle state. 0 Active-high clocks selected. In idle state SCK is low. 1 Active-low clocks selected. In idle state SCK is high.
2 CPHA	**SPI Clock Phase Bit** — This bit is used to select the SPI clock format. In master mode, a change of this bit will abort a transmission in progress and force the SPI system into idle state. 0 Sampling of data occurs at odd edges (1,3,5,...) of the SCK clock. 1 Sampling of data occurs at even edges (2,4,6,...) of the SCK clock.

Table 12-2. SPICR1 Field Descriptions (continued)

Field	Description
1 SSOE	**Slave Select Output Enable** — The $\overline{SS}$ output feature is enabled only in master mode, if MODFEN is set, by asserting the SSOE as shown in Table 12-3. In master mode, a change of this bit will abort a transmission in progress and force the SPI system into idle state.
0 LSBFE	**LSB-First Enable** — This bit does not affect the position of the MSB and LSB in the data register. Reads and writes of the data register always have the MSB in the highest bit position. In master mode, a change of this bit will abort a transmission in progress and force the SPI system into idle state. 0 Data is transferred most significant bit first. 1 Data is transferred least significant bit first.

Table 12-3. $\overline{SS}$ Input / Output Selection

MODFEN	SSOE	Master Mode	Slave Mode
0	0	$\overline{SS}$ not used by SPI	$\overline{SS}$ input
0	1	$\overline{SS}$ not used by SPI	$\overline{SS}$ input
1	0	$\overline{SS}$ input with MODF feature	$\overline{SS}$ input
1	1	$\overline{SS}$ is slave select output	$\overline{SS}$ input

12.3.2.2 SPI Control Register 2 (SPICR2)

Module Base +0x0001

	7	6	5	4	3	2	1	0
R	0	XFRW	0	MODFEN	BIDIROE	0	SPISWAI	SPC0
W								
Reset	0	0	0	0	0	0	0	0

= Unimplemented or Reserved

Figure 12-4. SPI Control Register 2 (SPICR2)

Read: Anytime

Write: Anytime; writes to the reserved bits have no effect

Table 12-4. SPICR2 Field Descriptions

Field	Description
6 XFRW	**Transfer Width —** This bit is used for selecting the data transfer width. If 8-bit transfer width is selected, SPIDRL becomes the dedicated data register and SPIDRH is unused. If 16-bit transfer width is selected, SPIDRH and SPIDRL form a 16-bit data register. Please refer to Section 12.3.2.4, “SPI Status Register (SPISR) for information about transmit/receive data handling and the interrupt flag clearing mechanism. In master mode, a change of this bit will abort a transmission in progress and force the SPI system into idle state. 0 8-bit Transfer Width (n = 8)(1) 1 16-bit Transfer Width (n = 16)1
4 MODFEN	**Mode Fault Enable Bit** — This bit allows the MODF failure to be detected. If the SPI is in master mode and MODFEN is cleared, then the $\overline{SS}$ port pin is not used by the SPI. In slave mode, the $\overline{SS}$ is available only as an input regardless of the value of MODFEN. For an overview on the impact of the MODFEN bit on the $\overline{SS}$ port pin configuration, refer to Table 12-3. In master mode, a change of this bit will abort a transmission in progress and force the SPI system into idle state. 0 $\overline{SS}$ port pin is not used by the SPI. 1 $\overline{SS}$ port pin with MODF feature.
3 BIDIROE	**Output Enable in the Bidirectional Mode of Operation** — This bit controls the MOSI and MISO output buffer of the SPI, when in bidirectional mode of operation (SPC0 is set). In master mode, this bit controls the output buffer of the MOSI port, in slave mode it controls the output buffer of the MISO port. In master mode, with SPC0 set, a change of this bit will abort a transmission in progress and force the SPI into idle state. 0 Output buffer disabled. 1 Output buffer enabled.
1 SPISWAI	**SPI Stop in Wait Mode Bit** — This bit is used for power conservation while in wait mode. 0 SPI clock operates normally in wait mode. 1 Stop SPI clock generation when in wait mode.
0 SPC0	**Serial Pin Control Bit 0** — This bit enables bidirectional pin configurations as shown in Table 12-5. In master mode, a change of this bit will abort a transmission in progress and force the SPI system into idle state.

1. n is used later in this document as a placeholder for the selected transfer width.

Table 12-5. Bidirectional Pin Configurations

Pin Mode	SPC0	BIDIROE	MISO	MOSI
Master Mode of Operation				
Normal	0	X	Master In	Master Out
Bidirectional	1	0	MISO not used by SPI	Master In
		1		Master I/O
Slave Mode of Operation				
Normal	0	X	Slave Out	Slave In
Bidirectional	1	0	Slave In	MOSI not used by SPI
		1	Slave I/O	

12.3.2.3 SPI Baud Rate Register (SPIBR)

Module Base +0x0002

	7	6	5	4	3	2	1	0
R	0	SPPR2	SPPR1	SPPR0	0	SPR2	SPR1	SPR0
W								
Reset	0	0	0	0	0	0	0	0

= Unimplemented or Reserved

Figure 12-5. SPI Baud Rate Register (SPIBR)

Read: Anytime

Write: Anytime; writes to the reserved bits have no effect

Table 12-6. SPIBR Field Descriptions

Field	Description
6–4 SPPR[2:0]	**SPI Baud Rate Preselection Bits** — These bits specify the SPI baud rates as shown in Table 12-7. In master mode, a change of these bits will abort a transmission in progress and force the SPI system into idle state.
2–0 SPR[2:0]	**SPI Baud Rate Selection Bits** — These bits specify the SPI baud rates as shown in Table 12-7. In master mode, a change of these bits will abort a transmission in progress and force the SPI system into idle state.

The baud rate divisor equation is as follows:

$$\text{BaudRateDivisor} = (\text{SPPR} + 1) \bullet 2^{(\text{SPR} + 1)} \qquad \textit{Eqn. 12-1}$$

The baud rate can be calculated with the following equation:

$$\text{Baud Rate} = \text{BusClock} / \text{BaudRateDivisor} \qquad \textit{Eqn. 12-2}$$

NOTE

For maximum allowed baud rates, please refer to the SPI Electrical Specification in the Electricals chapter of this data sheet.

Table 12-7. Example SPI Baud Rate Selection (25 MHz Bus Clock) (Sheet 1 of 3)

SPPR2	SPPR1	SPPR0	SPR2	SPR1	SPR0	Baud Rate Divisor	Baud Rate
0	0	0	0	0	0	2	12.5 Mbit/s
0	0	0	0	0	1	4	6.25 Mbit/s
0	0	0	0	1	0	8	3.125 Mbit/s
0	0	0	0	1	1	16	1.5625 Mbit/s
0	0	0	1	0	0	32	781.25 kbit/s
0	0	0	1	0	1	64	390.63 kbit/s
0	0	0	1	1	0	128	195.31 kbit/s
0	0	0	1	1	1	256	97.66 kbit/s
0	0	1	0	0	0	4	6.25 Mbit/s
0	0	1	0	0	1	8	3.125 Mbit/s
0	0	1	0	1	0	16	1.5625 Mbit/s
0	0	1	0	1	1	32	781.25 kbit/s

Table 12-7. Example SPI Baud Rate Selection (25 MHz Bus Clock) (Sheet 2 of 3)

SPPR2	SPPR1	SPPR0	SPR2	SPR1	SPR0	Baud Rate Divisor	Baud Rate
0	0	1	1	0	0	64	390.63 kbit/s
0	0	1	1	0	1	128	195.31 kbit/s
0	0	1	1	1	0	256	97.66 kbit/s
0	0	1	1	1	1	512	48.83 kbit/s
0	1	0	0	0	0	6	4.16667 Mbit/s
0	1	0	0	0	1	12	2.08333 Mbit/s
0	1	0	0	1	0	24	1.04167 Mbit/s
0	1	0	0	1	1	48	520.83 kbit/s
0	1	0	1	0	0	96	260.42 kbit/s
0	1	0	1	0	1	192	130.21 kbit/s
0	1	0	1	1	0	384	65.10 kbit/s
0	1	0	1	1	1	768	32.55 kbit/s
0	1	1	0	0	0	8	3.125 Mbit/s
0	1	1	0	0	1	16	1.5625 Mbit/s
0	1	1	0	1	0	32	781.25 kbit/s
0	1	1	0	1	1	64	390.63 kbit/s
0	1	1	1	0	0	128	195.31 kbit/s
0	1	1	1	0	1	256	97.66 kbit/s
0	1	1	1	1	0	512	48.83 kbit/s
0	1	1	1	1	1	1024	24.41 kbit/s
1	0	0	0	0	0	10	2.5 Mbit/s
1	0	0	0	0	1	20	1.25 Mbit/s
1	0	0	0	1	0	40	625 kbit/s
1	0	0	0	1	1	80	312.5 kbit/s
1	0	0	1	0	0	160	156.25 kbit/s
1	0	0	1	0	1	320	78.13 kbit/s
1	0	0	1	1	0	640	39.06 kbit/s
1	0	0	1	1	1	1280	19.53 kbit/s
1	0	1	0	0	0	12	2.08333 Mbit/s
1	0	1	0	0	1	24	1.04167 Mbit/s
1	0	1	0	1	0	48	520.83 kbit/s
1	0	1	0	1	1	96	260.42 kbit/s
1	0	1	1	0	0	192	130.21 kbit/s
1	0	1	1	0	1	384	65.10 kbit/s
1	0	1	1	1	0	768	32.55 kbit/s
1	0	1	1	1	1	1536	16.28 kbit/s
1	1	0	0	0	0	14	1.78571 Mbit/s
1	1	0	0	0	1	28	892.86 kbit/s
1	1	0	0	1	0	56	446.43 kbit/s
1	1	0	0	1	1	112	223.21 kbit/s
1	1	0	1	0	0	224	111.61 kbit/s
1	1	0	1	0	1	448	55.80 kbit/s

Table 12-7. Example SPI Baud Rate Selection (25 MHz Bus Clock) (Sheet 3 of 3)

SPPR2	SPPR1	SPPR0	SPR2	SPR1	SPR0	Baud Rate Divisor	Baud Rate
1	1	0	1	1	0	896	27.90 kbit/s
1	1	0	1	1	1	1792	13.95 kbit/s
1	1	1	0	0	0	16	1.5625 Mbit/s
1	1	1	0	0	1	32	781.25 kbit/s
1	1	1	0	1	0	64	390.63 kbit/s
1	1	1	0	1	1	128	195.31 kbit/s
1	1	1	1	0	0	256	97.66 kbit/s
1	1	1	1	0	1	512	48.83 kbit/s
1	1	1	1	1	0	1024	24.41 kbit/s
1	1	1	1	1	1	2048	12.21 kbit/s

12.3.2.4 SPI Status Register (SPISR)

Module Base +0x0003

	7	6	5	4	3	2	1	0
R	SPIF	0	SPTEF	MODF	0	0	0	0
W								
Reset	0	0	1	0	0	0	0	0

= Unimplemented or Reserved

Figure 12-6. SPI Status Register (SPISR)

Read: Anytime

Write: Has no effect

Table 12-8. SPISR Field Descriptions

Field	Description
7 SPIF	**SPIF Interrupt Flag** — This bit is set after received data has been transferred into the SPI data register. For information about clearing SPIF Flag, please refer to Table 12-9. 0 Transfer not yet complete. 1 New data copied to SPIDR.
5 SPTEF	**SPI Transmit Empty Interrupt Flag** — If set, this bit indicates that the transmit data register is empty. For information about clearing this bit and placing data into the transmit data register, please refer to Table 12-10. 0 SPI data register not empty. 1 SPI data register empty.
4 MODF	**Mode Fault Flag** — This bit is set if the $\overline{SS}$ input becomes low while the SPI is configured as a master and mode fault detection is enabled, MODFEN bit of SPICR2 register is set. Refer to MODFEN bit description in Section 12.3.2.2, “SPI Control Register 2 (SPICR2)”. The flag is cleared automatically by a read of the SPI status register (with MODF set) followed by a write to the SPI control register 1. 0 Mode fault has not occurred. 1 Mode fault has occurred.

Table 12-9. SPIF Interrupt Flag Clearing Sequence

XFRW Bit	SPIF Interrupt Flag Clearing Sequence		
0	Read SPISR with SPIF == 1	**then**	Read SPIDRL
1	Read SPISR with SPIF == 1	**then**	Byte Read SPIDRL (1)
			or
			Byte Read SPIDRH (2) | Byte Read SPIDRL
			or
			Word Read (SPIDRH:SPIDRL)

1. Data in SPIDRH is lost in this case.
2. SPIDRH can be read repeatedly without any effect on SPIF. SPIF Flag is cleared only by the read of SPIDRL after reading SPISR with SPIF == 1.

Table 12-10. SPTEF Interrupt Flag Clearing Sequence

XFRW Bit	SPTEF Interrupt Flag Clearing Sequence		
0	Read SPISR with SPTEF == 1	**then**	Write to SPIDRL (1)
1	Read SPISR with SPTEF == 1	**then**	Byte Write to SPIDRL 1(2)
			or
			Byte Write to SPIDRH 1(3) | Byte Write to SPIDRL 1
			or
			Word Write to (SPIDRH:SPIDRL) 1

1. Any write to SPIDRH or SPIDRL with SPTEF == 0 is effectively ignored.
2. Data in SPIDRH is undefined in this case.
3. SPIDRH can be written repeatedly without any effect on SPTEF. SPTEF Flag is cleared only by writing to SPIDRL after reading SPISR with SPTEF == 1.

12.3.2.5 SPI Data Register (SPIDR = SPIDRH:SPIDRL)

Module Base +0x0004

	7	6	5	4	3	2	1	0
R	R15	R14	R13	R12	R11	R10	R9	R8
W	T15	T14	T13	T12	T11	T10	T9	T8
Reset	0	0	0	0	0	0	0	0

Figure 12-7. SPI Data Register High (SPIDRH)

Module Base +0x0005

	7	6	5	4	3	2	1	0
R	R7	R6	R5	R4	R3	R2	R1	R0
W	T7	T6	T5	T4	T3	T2	T1	T0
Reset	0	0	0	0	0	0	0	0

Figure 12-8. SPI Data Register Low (SPIDRL)

Read: Anytime; read data only valid when SPIF is set

Write: Anytime

The SPI data register is both the input and output register for SPI data. A write to this register allows data to be queued and transmitted. For an SPI configured as a master, queued data is transmitted immediately after the previous transmission has completed. The SPI transmitter empty flag SPTEF in the SPISR register indicates when the SPI data register is ready to accept new data.

Received data in the SPIDR is valid when SPIF is set.

If SPIF is cleared and data has been received, the received data is transferred from the receive shift register to the SPIDR and SPIF is set.

If SPIF is set and not serviced, and a second data value has been received, the second received data is kept as valid data in the receive shift register until the start of another transmission. The data in the SPIDR does not change.

If SPIF is set and valid data is in the receive shift register, and SPIF is serviced before the start of a third transmission, the data in the receive shift register is transferred into the SPIDR and SPIF remains set (see Figure 12-9).

If SPIF is set and valid data is in the receive shift register, and SPIF is serviced after the start of a third transmission, the data in the receive shift register has become invalid and is not transferred into the SPIDR (see Figure 12-10).

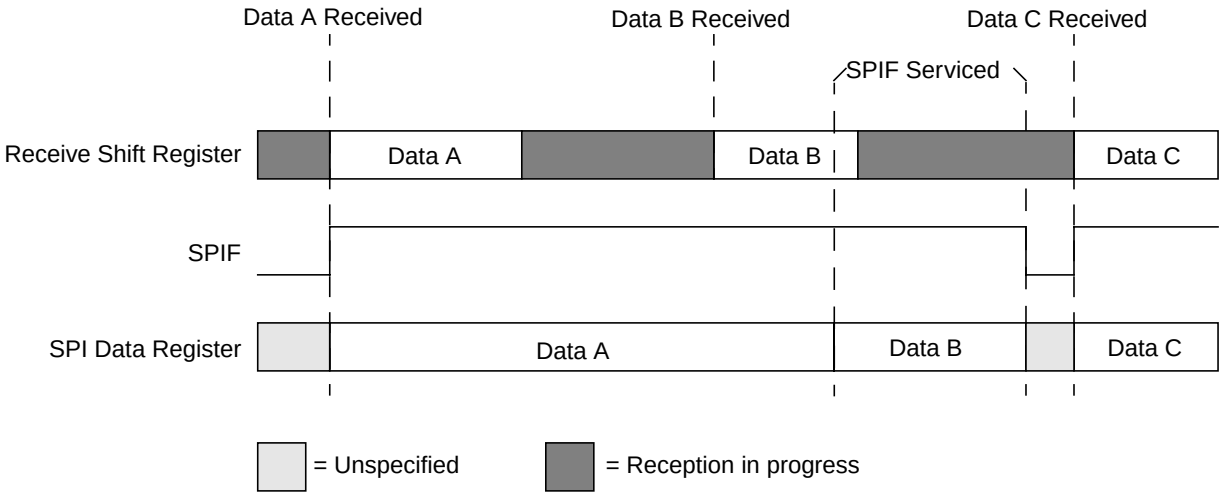

Figure 12-9. Reception with SPIF serviced in Time

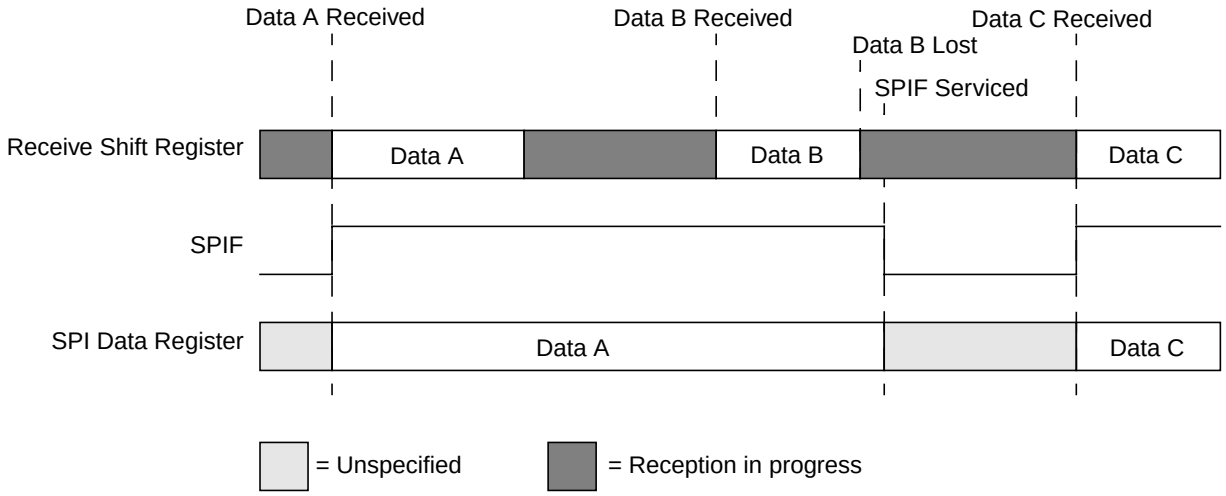

Figure 12-10. Reception with SPIF serviced too late

12.4 Functional Description

The SPI module allows a duplex, synchronous, serial communication between the MCU and peripheral devices. Software can poll the SPI status flags or SPI operation can be interrupt driven.

The SPI system is enabled by setting the SPI enable (SPE) bit in SPI control register 1. While SPE is set, the four associated SPI port pins are dedicated to the SPI function as:

- Slave select ($\overline{SS}$)
- Serial clock (SCK)
- Master out/slave in (MOSI)
- Master in/slave out (MISO)

The main element of the SPI system is the SPI data register. The n-bit[1] data register in the master and the n-bit[1] data register in the slave are linked by the MOSI and MISO pins to form a distributed 2n-bit[1] register. When a data transfer operation is performed, this 2n-bit[1] register is serially shifted n[1] bit positions by the S-clock from the master, so data is exchanged between the master and the slave. Data written to the master SPI data register becomes the output data for the slave, and data read from the master SPI data register after a transfer operation is the input data from the slave.

A read of SPISR with SPTEF = 1 followed by a write to SPIDR puts data into the transmit data register. When a transfer is complete and SPIF is cleared, received data is moved into the receive data register. This data register acts as the SPI receive data register for reads and as the SPI transmit data register for writes. A common SPI data register address is shared for reading data from the read data buffer and for writing data to the transmit data register.

The clock phase control bit (CPHA) and a clock polarity control bit (CPOL) in the SPI control register 1 (SPICR1) select one of four possible clock formats to be used by the SPI system. The CPOL bit simply selects a non-inverted or inverted clock. The CPHA bit is used to accommodate two fundamentally different protocols by sampling data on odd numbered SCK edges or on even numbered SCK edges (see Section 12.4.3, “Transmission Formats”).

The SPI can be configured to operate as a master or as a slave. When the MSTR bit in SPI control register1 is set, master mode is selected, when the MSTR bit is clear, slave mode is selected.

NOTE

A change of CPOL or MSTR bit while there is a received byte pending in the receive shift register will destroy the received byte and must be avoided.

12.4.1 Master Mode

The SPI operates in master mode when the MSTR bit is set. Only a master SPI module can initiate transmissions. A transmission begins by writing to the master SPI data register. If the shift register is empty, data immediately transfers to the shift register. Data begins shifting out on the MOSI pin under the control of the serial clock.

- Serial clock

  The SPR2, SPR1, and SPR0 baud rate selection bits, in conjunction with the SPPR2, SPPR1, and SPPR0 baud rate preselection bits in the SPI baud rate register, control the baud rate generator and determine the speed of the transmission. The SCK pin is the SPI clock output. Through the SCK pin, the baud rate generator of the master controls the shift register of the slave peripheral.
- MOSI, MISO pin

  In master mode, the function of the serial data output pin (MOSI) and the serial data input pin (MISO) is determined by the SPC0 and BIDIROE control bits.
- $\overline{SS}$ pin

  If MODFEN and SSOE are set, the $\overline{SS}$ pin is configured as slave select output. The $\overline{SS}$ output becomes low during each transmission and is high when the SPI is in idle state.

  If MODFEN is set and SSOE is cleared, the $\overline{SS}$ pin is configured as input for detecting mode fault error. If the $\overline{SS}$ input becomes low this indicates a mode fault error where another master tries to

1. n depends on the selected transfer width, please refer to Section 12.3.2.2, “SPI Control Register 2 (SPICR2)

drive the MOSI and SCK lines. In this case, the SPI immediately switches to slave mode, by clearing the MSTR bit and also disables the slave output buffer MISO (or SISO in bidirectional mode). So the result is that all outputs are disabled and SCK, MOSI, and MISO are inputs. If a transmission is in progress when the mode fault occurs, the transmission is aborted and the SPI is forced into idle state.

This mode fault error also sets the mode fault (MODF) flag in the SPI status register (SPISR). If the SPI interrupt enable bit (SPIE) is set when the MODF flag becomes set, then an SPI interrupt sequence is also requested.

When a write to the SPI data register in the master occurs, there is a half SCK-cycle delay. After the delay, SCK is started within the master. The rest of the transfer operation differs slightly, depending on the clock format specified by the SPI clock phase bit, CPHA, in SPI control register 1 (see Section 12.4.3, “Transmission Formats”).

NOTE

A change of the bits CPOL, CPHA, SSOE, LSBFE, XFRW, MODFEN, SPC0, or BIDIROE with SPC0 set, SPPR2-SPPR0 and SPR2-SPR0 in master mode will abort a transmission in progress and force the SPI into idle state. The remote slave cannot detect this, therefore the master must ensure that the remote slave is returned to idle state.

12.4.2 Slave Mode

The SPI operates in slave mode when the MSTR bit in SPI control register 1 is clear.

- Serial clock

  In slave mode, SCK is the SPI clock input from the master.

- MISO, MOSI pin

  In slave mode, the function of the serial data output pin (MISO) and serial data input pin (MOSI) is determined by the SPC0 bit and BIDIROE bit in SPI control register 2.

- $\overline{SS}$ pin

  The $\overline{SS}$ pin is the slave select input. Before a data transmission occurs, the $\overline{SS}$ pin of the slave SPI must be low. $\overline{SS}$ must remain low until the transmission is complete. If $\overline{SS}$ goes high, the SPI is forced into idle state.

  The $\overline{SS}$ input also controls the serial data output pin, if $\overline{SS}$ is high (not selected), the serial data output pin is high impedance, and, if $\overline{SS}$ is low, the first bit in the SPI data register is driven out of the serial data output pin. Also, if the slave is not selected ($\overline{SS}$ is high), then the SCK input is ignored and no internal shifting of the SPI shift register occurs.

  Although the SPI is capable of duplex operation, some SPI peripherals are capable of only receiving SPI data in a slave mode. For these simpler devices, there is no serial data out pin.

NOTE

When peripherals with duplex capability are used, take care not to simultaneously enable two receivers whose serial outputs drive the same system slave’s serial data output line.

As long as no more than one slave device drives the system slave's serial data output line, it is possible for several slaves to receive the same transmission from a master, although the master would not receive return information from all of the receiving slaves.

If the CPHA bit in SPI control register 1 is clear, odd numbered edges on the SCK input cause the data at the serial data input pin to be latched. Even numbered edges cause the value previously latched from the serial data input pin to shift into the LSB or MSB of the SPI shift register, depending on the LSBFE bit.

If the CPHA bit is set, even numbered edges on the SCK input cause the data at the serial data input pin to be latched. Odd numbered edges cause the value previously latched from the serial data input pin to shift into the LSB or MSB of the SPI shift register, depending on the LSBFE bit.

When CPHA is set, the first edge is used to get the first data bit onto the serial data output pin. When CPHA is clear and the $\overline{SS}$ input is low (slave selected), the first bit of the SPI data is driven out of the serial data output pin. After the nth[1] shift, the transfer is considered complete and the received data is transferred into the SPI data register. To indicate transfer is complete, the SPIF flag in the SPI status register is set.

NOTE

A change of the bits CPOL, CPHA, SSOE, LSBFE, MODFEN, SPC0, or BIDIROE with SPC0 set in slave mode will corrupt a transmission in progress and must be avoided.

12.4.3 Transmission Formats

During an SPI transmission, data is transmitted (shifted out serially) and received (shifted in serially) simultaneously. The serial clock (SCK) synchronizes shifting and sampling of the information on the two serial data lines. A slave select line allows selection of an individual slave SPI device; slave devices that are not selected do not interfere with SPI bus activities. Optionally, on a master SPI device, the slave select line can be used to indicate multiple-master bus contention.

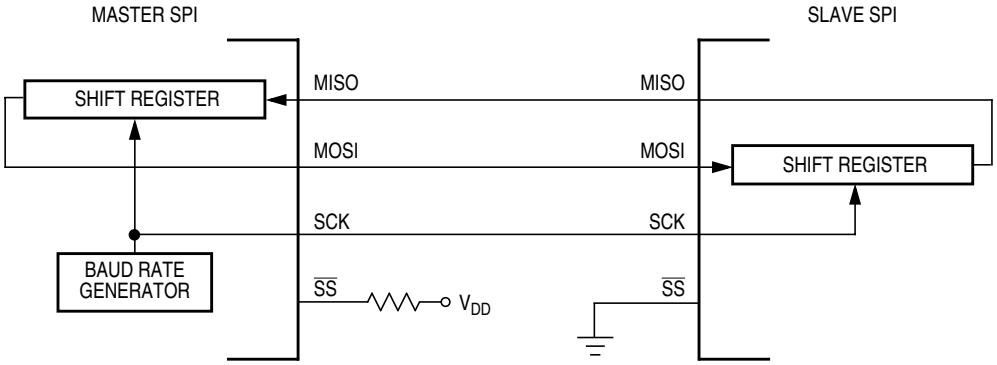

Figure 12-11. Master/Slave Transfer Block Diagram

12.4.3.1 Clock Phase and Polarity Controls

Using two bits in the SPI control register 1, software selects one of four combinations of serial clock phase and polarity.

1. n depends on the selected transfer width, please refer to Section 12.3.2.2, "SPI Control Register 2 (SPICR2)

The CPOL clock polarity control bit specifies an active high or low clock and has no significant effect on the transmission format.

The CPHA clock phase control bit selects one of two fundamentally different transmission formats.

Clock phase and polarity should be identical for the master SPI device and the communicating slave device. In some cases, the phase and polarity are changed between transmissions to allow a master device to communicate with peripheral slaves having different requirements.

12.4.3.2 CPHA = 0 Transfer Format

The first edge on the SCK line is used to clock the first data bit of the slave into the master and the first data bit of the master into the slave. In some peripherals, the first bit of the slave's data is available at the slave's data out pin as soon as the slave is selected. In this format, the first SCK edge is issued a half cycle after $\overline{SS}$ has become low.

A half SCK cycle later, the second edge appears on the SCK line. When this second edge occurs, the value previously latched from the serial data input pin is shifted into the LSB or MSB of the shift register, depending on LSBFE bit.

After this second edge, the next bit of the SPI master data is transmitted out of the serial data output pin of the master to the serial input pin on the slave. This process continues for a total of 16 edges on the SCK line, with data being latched on odd numbered edges and shifted on even numbered edges.

Data reception is double buffered. Data is shifted serially into the SPI shift register during the transfer and is transferred to the parallel SPI data register after the last bit is shifted in.

After $2n^1$ (last) SCK edges:

- Data that was previously in the master SPI data register should now be in the slave data register and the data that was in the slave data register should be in the master.
- The SPIF flag in the SPI status register is set, indicating that the transfer is complete.

Figure 12-12 is a timing diagram of an SPI transfer where CPHA = 0. SCK waveforms are shown for CPOL = 0 and CPOL = 1. The diagram may be interpreted as a master or slave timing diagram because the SCK, MISO, and MOSI pins are connected directly between the master and the slave. The MISO signal is the output from the slave and the MOSI signal is the output from the master. The $\overline{SS}$ pin of the master must be either high or reconfigured as a general-purpose output not affecting the SPI.

1. n depends on the selected transfer width, please refer to Section 12.3.2.2, "SPI Control Register 2 (SPICR2)

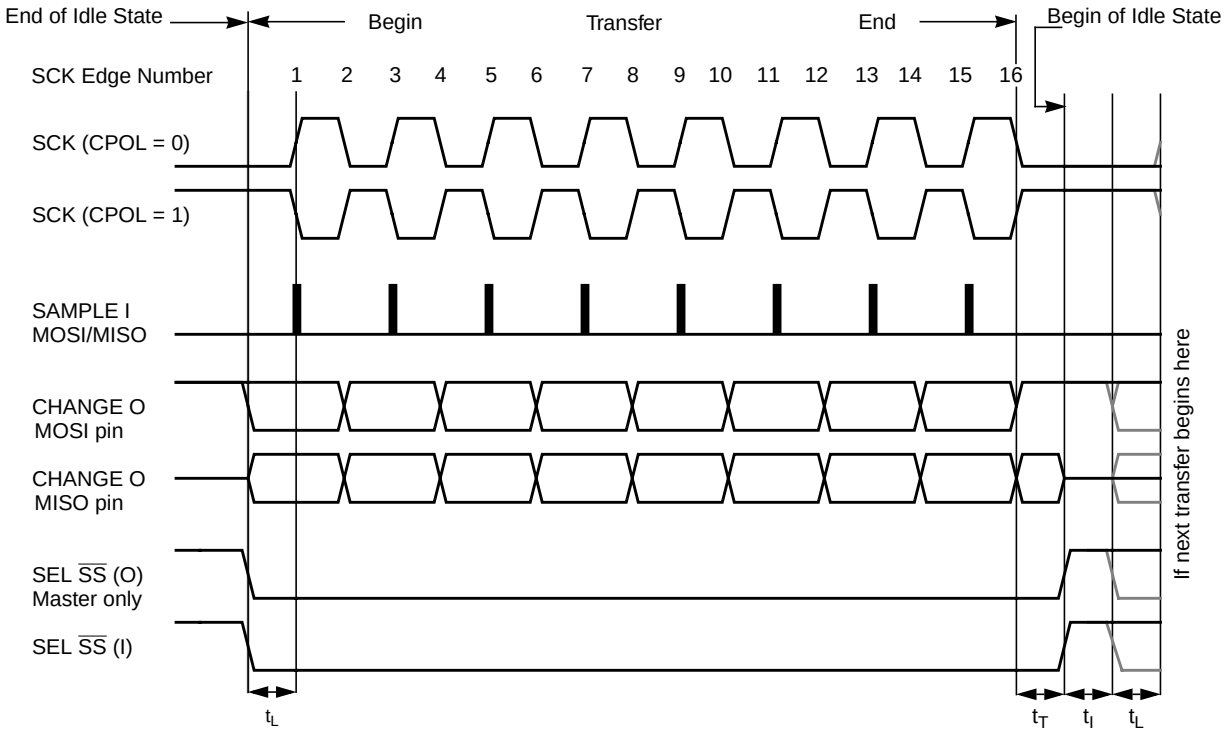

t_L = Minimum leading time before the first SCK edge

t_T = Minimum trailing time after the last SCK edge

t_I = Minimum idling time between transfers (minimum $\overline{SS}$ high time)

t_L, t_T, and t_I are guaranteed for the master mode and required for the slave mode.

Figure 12-12. SPI Clock Format 0 (CPHA = 0), with 8-bit Transfer Width selected (XFRW = 0)

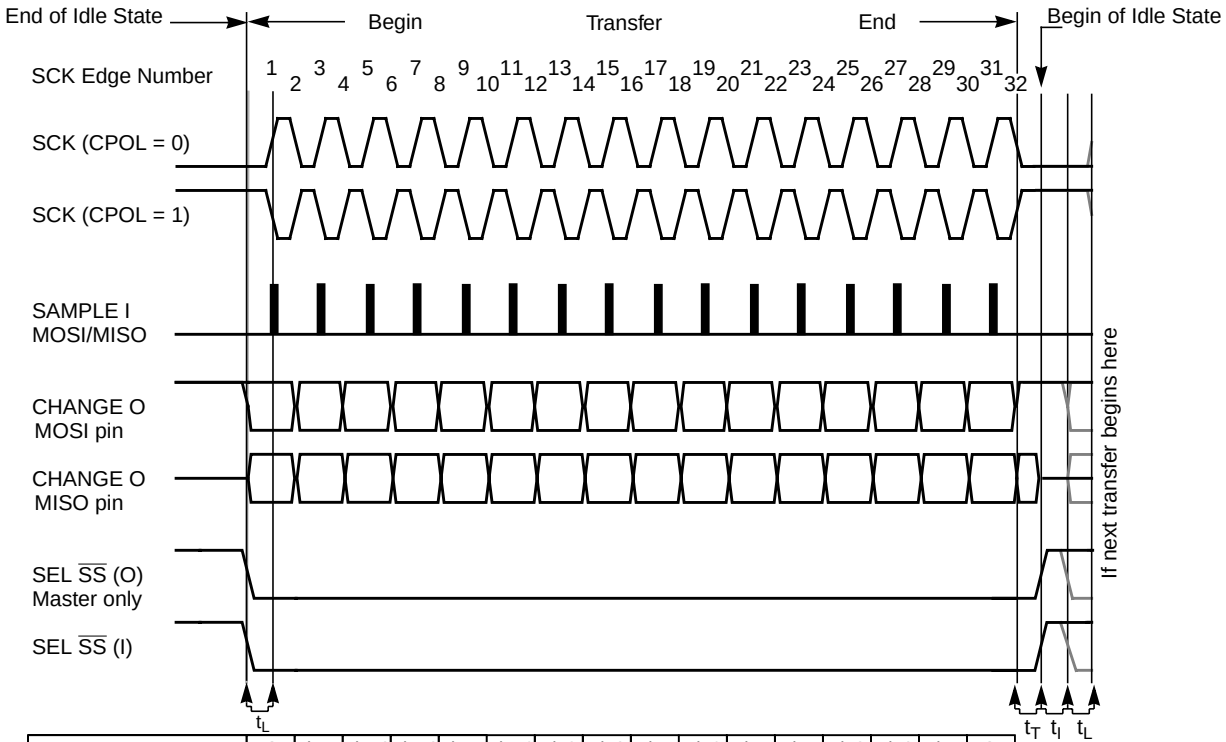

t_L = Minimum leading time before the first SCK edge
t_T = Minimum trailing time after the last SCK edge
t_l = Minimum idling time between transfers (minimum $\overline{SS}$ high time)
t_L, t_T, and t_l are guaranteed for the master mode and required for the slave mode.

Figure 12-13. SPI Clock Format 0 (CPHA = 0), with 16-Bit Transfer Width selected (XFRW = 1)

In slave mode, if the $\overline{SS}$ line is not deasserted between the successive transmissions then the content of the SPI data register is not transmitted; instead the last received data is transmitted. If the $\overline{SS}$ line is deasserted for at least minimum idle time (half SCK cycle) between successive transmissions, then the content of the SPI data register is transmitted.

In master mode, with slave select output enabled the $\overline{SS}$ line is always deasserted and reasserted between successive transfers for at least minimum idle time.

12.4.3.3 CPHA = 1 Transfer Format

Some peripherals require the first SCK edge before the first data bit becomes available at the data out pin, the second edge clocks data into the system. In this format, the first SCK edge is issued by setting the CPHA bit at the beginning of the n[1]-cycle transfer operation.

The first edge of SCK occurs immediately after the half SCK clock cycle synchronization delay. This first edge commands the slave to transfer its first data bit to the serial data input pin of the master.

A half SCK cycle later, the second edge appears on the SCK pin. This is the latching edge for both the master and slave.

1. n depends on the selected transfer width, please refer to Section 12.3.2.2, “SPI Control Register 2 (SPICR2)

When the third edge occurs, the value previously latched from the serial data input pin is shifted into the LSB or MSB of the SPI shift register, depending on LSBFE bit. After this edge, the next bit of the master data is coupled out of the serial data output pin of the master to the serial input pin on the slave.

This process continues for a total of n^1 edges on the SCK line with data being latched on even numbered edges and shifting taking place on odd numbered edges.

Data reception is double buffered, data is serially shifted into the SPI shift register during the transfer and is transferred to the parallel SPI data register after the last bit is shifted in.

After $2n^1$ SCK edges:

- Data that was previously in the SPI data register of the master is now in the data register of the slave, and data that was in the data register of the slave is in the master.
- The SPIF flag bit in SPISR is set indicating that the transfer is complete.

Figure 12-14 shows two clocking variations for CPHA = 1. The diagram may be interpreted as a master or slave timing diagram because the SCK, MISO, and MOSI pins are connected directly between the master and the slave. The MISO signal is the output from the slave, and the MOSI signal is the output from the master. The $\overline{SS}$ line is the slave select input to the slave. The $\overline{SS}$ pin of the master must be either high or reconfigured as a general-purpose output not affecting the SPI.

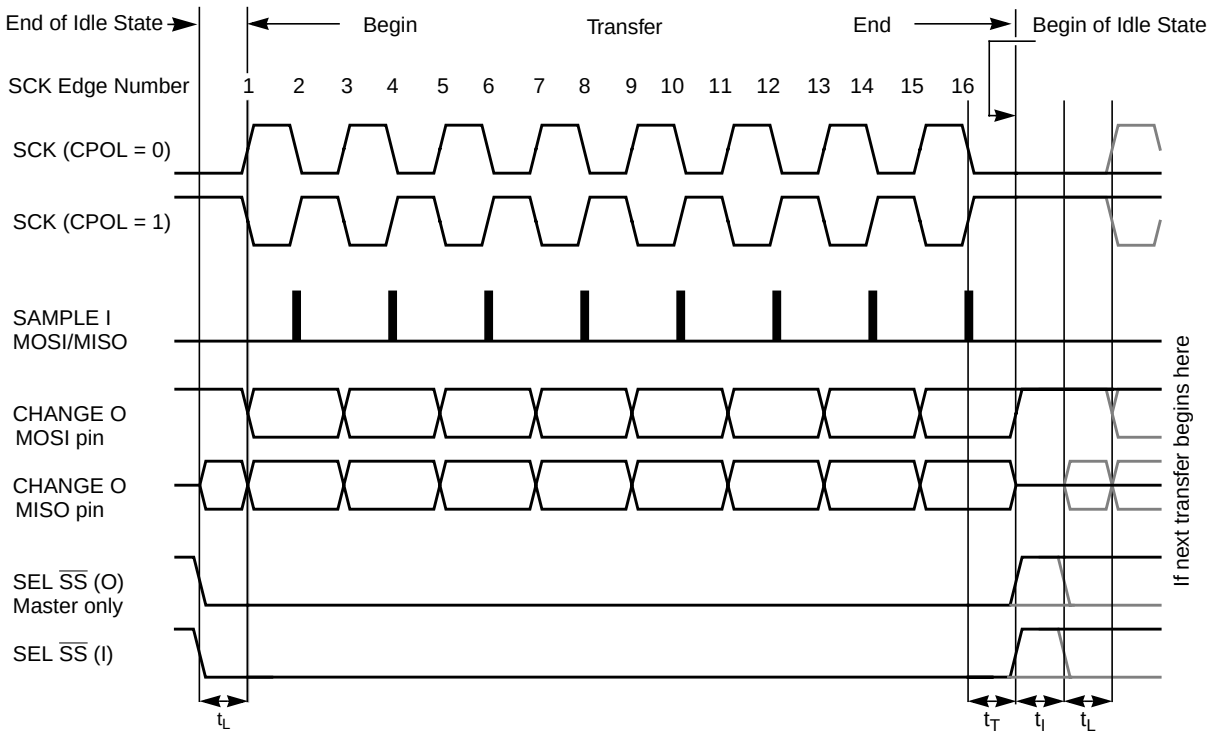

t_L = Minimum leading time before the first SCK edge, not required for back-to-back transfers
t_T = Minimum trailing time after the last SCK edge
t_I = Minimum idling time between transfers (minimum $\overline{SS}$ high time), not required for back-to-back transfers

Figure 12-14. SPI Clock Format 1 (CPHA = 1), with 8-Bit Transfer Width selected (XFRW = 0)

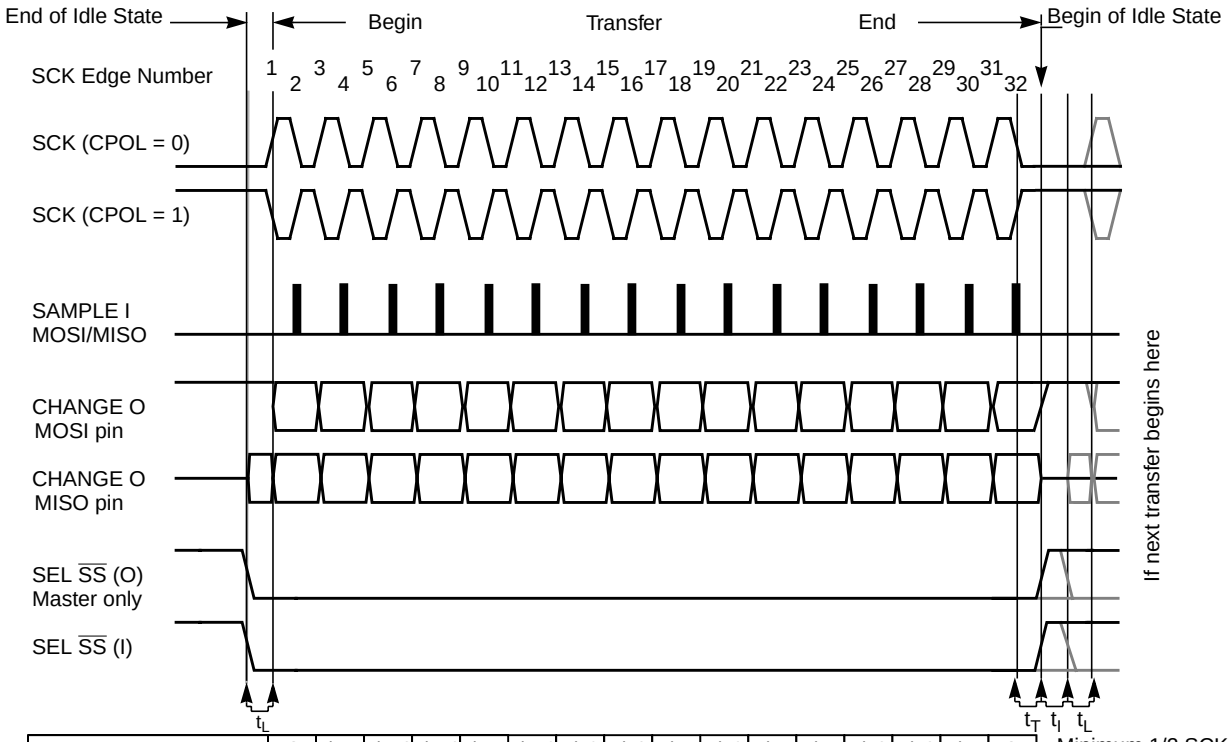

t_L = Minimum leading time before the first SCK edge, not required for back-to-back transfers
t_T = Minimum trailing time after the last SCK edge
t_I = Minimum idling time between transfers (minimum $\overline{SS}$ high time), not required for back-to-back transfers

Figure 12-15. SPI Clock Format 1 (CPHA = 1), with 16-Bit Transfer Width selected (XFRW = 1)

The $\overline{SS}$ line can remain active low between successive transfers (can be tied low at all times). This format is sometimes preferred in systems having a single fixed master and a single slave that drive the MISO data line.

- Back-to-back transfers in master mode

  In master mode, if a transmission has completed and new data is available in the SPI data register, this data is sent out immediately without a trailing and minimum idle time.

The SPI interrupt request flag (SPIF) is common to both the master and slave modes. SPIF gets set one half SCK cycle after the last SCK edge.

12.4.4 SPI Baud Rate Generation

Baud rate generation consists of a series of divider stages. Six bits in the SPI baud rate register (SPPR2, SPPR1, SPPR0, SPR2, SPR1, and SPR0) determine the divisor to the SPI module clock which results in the SPI baud rate.

The SPI clock rate is determined by the product of the value in the baud rate preselection bits (SPPR2–SPPR0) and the value in the baud rate selection bits (SPR2–SPR0). The module clock divisor equation is shown in Equation 12-3.

$$\text{BaudRateDivisor} = (\text{SPPR} + 1) \bullet 2^{(\text{SPR} + 1)} \qquad \textit{Eqn. 12-3}$$

When all bits are clear (the default condition), the SPI module clock is divided by 2. When the selection bits (SPR2–SPR0) are 001 and the preselection bits (SPPR2–SPPR0) are 000, the module clock divisor becomes 4. When the selection bits are 010, the module clock divisor becomes 8, etc.

When the preselection bits are 001, the divisor determined by the selection bits is multiplied by 2. When the preselection bits are 010, the divisor is multiplied by 3, etc. See Table 12-7 for baud rate calculations for all bit conditions, based on a 25 MHz bus clock. The two sets of selects allows the clock to be divided by a non-power of two to achieve other baud rates such as divide by 6, divide by 10, etc.

The baud rate generator is activated only when the SPI is in master mode and a serial transfer is taking place. In the other cases, the divider is disabled to decrease I_{DD} current.

NOTE

For maximum allowed baud rates, please refer to the SPI Electrical Specification in the Electricals chapter of this data sheet.

12.4.5 Special Features

12.4.5.1 $\overline{SS}$ Output

The $\overline{SS}$ output feature automatically drives the $\overline{SS}$ pin low during transmission to select external devices and drives it high during idle to deselect external devices. When $\overline{SS}$ output is selected, the $\overline{SS}$ output pin is connected to the $\overline{SS}$ input pin of the external device.

The $\overline{SS}$ output is available only in master mode during normal SPI operation by asserting SSOE and MODFEN bit as shown in Table 12-3.

The mode fault feature is disabled while $\overline{SS}$ output is enabled.

NOTE

Care must be taken when using the $\overline{SS}$ output feature in a multimaster system because the mode fault feature is not available for detecting system errors between masters.

12.4.5.2 Bidirectional Mode (MOMI or SISO)

The bidirectional mode is selected when the SPC0 bit is set in SPI control register 2 (see Table 12-11). In this mode, the SPI uses only one serial data pin for the interface with external device(s). The MSTR bit decides which pin to use. The MOSI pin becomes the serial data I/O (MOMI) pin for the master mode, and the MISO pin becomes serial data I/O (SISO) pin for the slave mode. The MISO pin in master mode and MOSI pin in slave mode are not used by the SPI.

Table 12-11. Normal Mode and Bidirectional Mode

When SPE = 1	Master Mode MSTR = 1	Slave Mode MSTR = 0
Normal Mode SPC0 = 0	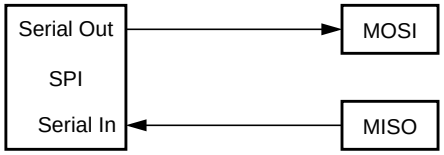	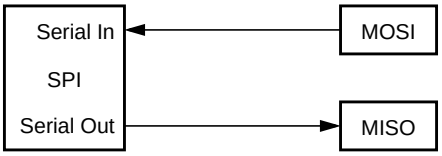
Bidirectional Mode SPC0 = 1	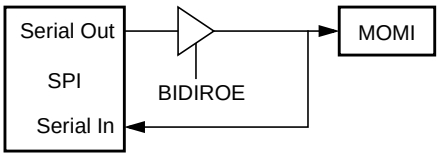	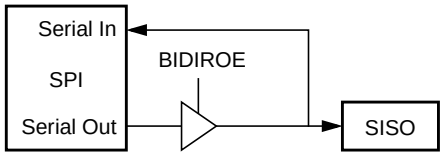

The direction of each serial I/O pin depends on the BIDIROE bit. If the pin is configured as an output, serial data from the shift register is driven out on the pin. The same pin is also the serial input to the shift register.

- The SCK is output for the master mode and input for the slave mode.
- The $\overline{SS}$ is the input or output for the master mode, and it is always the input for the slave mode.
- The bidirectional mode does not affect SCK and $\overline{SS}$ functions.

NOTE

In bidirectional master mode, with mode fault enabled, both data pins MISO and MOSI can be occupied by the SPI, though MOSI is normally used for transmissions in bidirectional mode and MISO is not used by the SPI. If a mode fault occurs, the SPI is automatically switched to slave mode. In this case MISO becomes occupied by the SPI and MOSI is not used. This must be considered, if the MISO pin is used for another purpose.

12.4.6 Error Conditions

The SPI has one error condition:

- Mode fault error

12.4.6.1 Mode Fault Error

If the $\overline{SS}$ input becomes low while the SPI is configured as a master, it indicates a system error where more than one master may be trying to drive the MOSI and SCK lines simultaneously. This condition is not permitted in normal operation, the MODF bit in the SPI status register is set automatically, provided the MODFEN bit is set.

In the special case where the SPI is in master mode and MODFEN bit is cleared, the $\overline{SS}$ pin is not used by the SPI. In this special case, the mode fault error function is inhibited and MODF remains cleared. In case

the SPI system is configured as a slave, the $\overline{SS}$ pin is a dedicated input pin. Mode fault error doesn't occur in slave mode.

If a mode fault error occurs, the SPI is switched to slave mode, with the exception that the slave output buffer is disabled. So SCK, MISO, and MOSI pins are forced to be high impedance inputs to avoid any possibility of conflict with another output driver. A transmission in progress is aborted and the SPI is forced into idle state.

If the mode fault error occurs in the bidirectional mode for a SPI system configured in master mode, output enable of the MOMI (MOSI in bidirectional mode) is cleared if it was set. No mode fault error occurs in the bidirectional mode for SPI system configured in slave mode.

The mode fault flag is cleared automatically by a read of the SPI status register (with MODF set) followed by a write to SPI control register 1. If the mode fault flag is cleared, the SPI becomes a normal master or slave again.

NOTE

If a mode fault error occurs and a received data byte is pending in the receive shift register, this data byte will be lost.

12.4.7 Low Power Mode Options

12.4.7.1 SPI in Run Mode

In run mode with the SPI system enable (SPE) bit in the SPI control register clear, the SPI system is in a low-power, disabled state. SPI registers remain accessible, but clocks to the core of this module are disabled.

12.4.7.2 SPI in Wait Mode

SPI operation in wait mode depends upon the state of the SPISWAI bit in SPI control register 2.

- If SPISWAI is clear, the SPI operates normally when the CPU is in wait mode
- If SPISWAI is set, SPI clock generation ceases and the SPI module enters a power conservation state when the CPU is in wait mode.
  - If SPISWAI is set and the SPI is configured for master, any transmission and reception in progress stops at wait mode entry. The transmission and reception resumes when the SPI exits wait mode.
  - If SPISWAI is set and the SPI is configured as a slave, any transmission and reception in progress continues if the SCK continues to be driven from the master. This keeps the slave synchronized to the master and the SCK.

    If the master transmits several bytes while the slave is in wait mode, the slave will continue to send out bytes consistent with the operation mode at the start of wait mode (i.e., if the slave is currently sending its SPIDR to the master, it will continue to send the same byte. Else if the slave is currently sending the last received byte from the master, it will continue to send each previous master byte).

NOTE

Care must be taken when expecting data from a master while the slave is in wait or stop mode. Even though the shift register will continue to operate, the rest of the SPI is shut down (i.e., a SPIF interrupt will **not** be generated until exiting stop or wait mode). Also, the byte from the shift register will not be copied into the SPIDR register until after the slave SPI has exited wait or stop mode. In slave mode, a received byte pending in the receive shift register will be lost when entering wait or stop mode. An SPIF flag and SPIDR copy is generated only if wait mode is entered or exited during a tranmission. If the slave enters wait mode in idle mode and exits wait mode in idle mode, neither a SPIF nor a SPIDR copy will occur.

12.4.7.3 SPI in Stop Mode

Stop mode is dependent on the system. The SPI enters stop mode when the module clock is disabled (held high or low). If the SPI is in master mode and exchanging data when the CPU enters stop mode, the transmission is frozen until the CPU exits stop mode. After stop, data to and from the external SPI is exchanged correctly. In slave mode, the SPI will stay synchronized with the master.

The stop mode is not dependent on the SPISWAI bit.

12.4.7.4 Reset

The reset values of registers and signals are described in Section 12.3, “Memory Map and Register Definition”, which details the registers and their bit fields.

- If a data transmission occurs in slave mode after reset without a write to SPIDR, it will transmit garbage, or the data last received from the master before the reset.
- Reading from the SPIDR after reset will always read zeros.

12.4.7.5 Interrupts

The SPI only originates interrupt requests when SPI is enabled (SPE bit in SPICR1 set). The following is a description of how the SPI makes a request and how the MCU should acknowledge that request. The interrupt vector offset and interrupt priority are chip dependent.

The interrupt flags MODF, SPIF, and SPTEF are logically ORed to generate an interrupt request.

12.4.7.5.1 MODF

MODF occurs when the master detects an error on the $\overline{SS}$ pin. The master SPI must be configured for the MODF feature (see Table 12-3). After MODF is set, the current transfer is aborted and the following bit is changed:

- MSTR = 0, The master bit in SPICR1 resets.

The MODF interrupt is reflected in the status register MODF flag. Clearing the flag will also clear the interrupt. This interrupt will stay active while the MODF flag is set. MODF has an automatic clearing process which is described in Section 12.3.2.4, “SPI Status Register (SPISR)”.

12.4.7.5.2 SPIF

SPIF occurs when new data has been received and copied to the SPI data register. After SPIF is set, it does not clear until it is serviced. SPIF has an automatic clearing process, which is described in Section 12.3.2.4, “SPI Status Register (SPISR)”.

12.4.7.5.3 SPTEF

SPTEF occurs when the SPI data register is ready to accept new data. After SPTEF is set, it does not clear until it is serviced. SPTEF has an automatic clearing process, which is described in Section 12.3.2.4, “SPI Status Register (SPISR)”.

Chapter 13
128 KByte Flash Module (S12FTMRC128K1V1)

Table 13-1. Revision History

Revision Number	Revision Date	Sections Affected	Description of Changes
V01.09	28 Jul 2008	13.1.1/13-426 13.3.1/13-429	- Remove reference to IFRON in Program IFR definition - Remove reference to IFRON in Table 13-4 and Figure 13-3
V01.10	19 Dec 2008	13.1/13-425 13.4.5.4/13-457 13.4.5.6/13-459 13.4.5.11/13-463 13.4.5.11/13-463 13.4.5.11/13-463 13.5.2/13-471	- Clarify single bit fault correction for P-Flash phrase - Add statement concerning code runaway when executing Read Once, Program Once, and Verify Backdoor Access Key commands from Flash block containing associated fields - Relate Key 0 to associated Backdoor Comparison Key address - Change “power down reset” to “reset” - Reformat section on unsecuring MCU using BDM
V01.11	25 Sep 2009	13.3.2/13-432 13.3.2.1/13-433 13.4.3.2/13-451 13.6/13-472	-The following changes were made to clarify module behavior related to Flash register access during reset sequence and while Flash commands are active: - Add caution concerning register writes while command is active - Writes to FCLKDIV are allowed during reset sequence while CCIF is clear - Add caution concerning register writes while command is active - Writes to FCCOBIX, FCCOBHI, FCCOBLO registers are ignored during reset sequence

13.1 Introduction

The FTMRC128K1 module implements the following:

- 128 Kbytes of P-Flash (Program Flash) memory
- 4 Kbytes of D-Flash (Data Flash) memory

The Flash memory is ideal for single-supply applications allowing for field reprogramming without requiring external high voltage sources for program or erase operations. The Flash module includes a memory controller that executes commands to modify Flash memory contents. The user interface to the memory controller consists of the indexed Flash Common Command Object (FCCOB) register which is written to with the command, global address, data, and any required command parameters. The memory controller must complete the execution of a command before the FCCOB register can be written to with a new command.

CAUTION

A Flash word or phrase must be in the erased state before being programmed. Cumulative programming of bits within a Flash word or phrase is not allowed.

The Flash memory may be read as bytes, aligned words, or misaligned words. Read access time is one bus cycle for bytes and aligned words, and two bus cycles for misaligned words. For Flash memory, an erased bit reads 1 and a programmed bit reads 0.

It is possible to read from P-Flash memory while some commands are executing on D-Flash memory. It is not possible to read from D-Flash memory while a command is executing on P-Flash memory. Simultaneous P-Flash and D-Flash operations are discussed in Section 13.4.4.

Both P-Flash and D-Flash memories are implemented with Error Correction Codes (ECC) that can resolve single bit faults and detect double bit faults. For P-Flash memory, the ECC implementation requires that programming be done on an aligned 8 byte basis (a Flash phrase). Since P-Flash memory is always read by half-phrase, only one single bit fault in an aligned 4 byte half-phrase containing the byte or word accessed will be corrected.

13.1.1 Glossary

Command Write Sequence — An MCU instruction sequence to execute built-in algorithms (including program and erase) on the Flash memory.

D-Flash Memory — The D-Flash memory constitutes the nonvolatile memory store for data.

D-Flash Sector — The D-Flash sector is the smallest portion of the D-Flash memory that can be erased. The D-Flash sector consists of four 64 byte rows for a total of 256 bytes.

NVM Command Mode — An NVM mode using the CPU to setup the FCCOB register to pass parameters required for Flash command execution.

Phrase — An aligned group of four 16-bit words within the P-Flash memory. Each phrase includes two sets of aligned double words with each set including 7 ECC bits for single bit fault correction and double bit fault detection within each double word.

P-Flash Memory — The P-Flash memory constitutes the main nonvolatile memory store for applications.

P-Flash Sector — The P-Flash sector is the smallest portion of the P-Flash memory that can be erased. Each P-Flash sector contains 512 bytes.

Program IFR — Nonvolatile information register located in the P-Flash block that contains the Device ID, Version ID, and the Program Once field.

13.1.2 Features

13.1.2.1 P-Flash Features

- 128 Kbytes of P-Flash memory composed of one 128 Kbyte Flash block divided into 256 sectors of 512 bytes
- Single bit fault correction and double bit fault detection within a 32-bit double word during read operations
- Automated program and erase algorithm with verify and generation of ECC parity bits
- Fast sector erase and phrase program operation
- Ability to read the P-Flash memory while programming a word in the D-Flash memory
- Flexible protection scheme to prevent accidental program or erase of P-Flash memory

13.1.2.2 D-Flash Features

- 4 Kbytes of D-Flash memory composed of one 4 Kbyte Flash block divided into 16 sectors of 256 bytes
- Single bit fault correction and double bit fault detection within a word during read operations
- Automated program and erase algorithm with verify and generation of ECC parity bits
- Fast sector erase and word program operation
- Protection scheme to prevent accidental program or erase of D-Flash memory
- Ability to program up to four words in a burst sequence

13.1.2.3 Other Flash Module Features

- No external high-voltage power supply required for Flash memory program and erase operations
- Interrupt generation on Flash command completion and Flash error detection
- Security mechanism to prevent unauthorized access to the Flash memory

13.1.3 Block Diagram

The block diagram of the Flash module is shown in Figure 13-1.

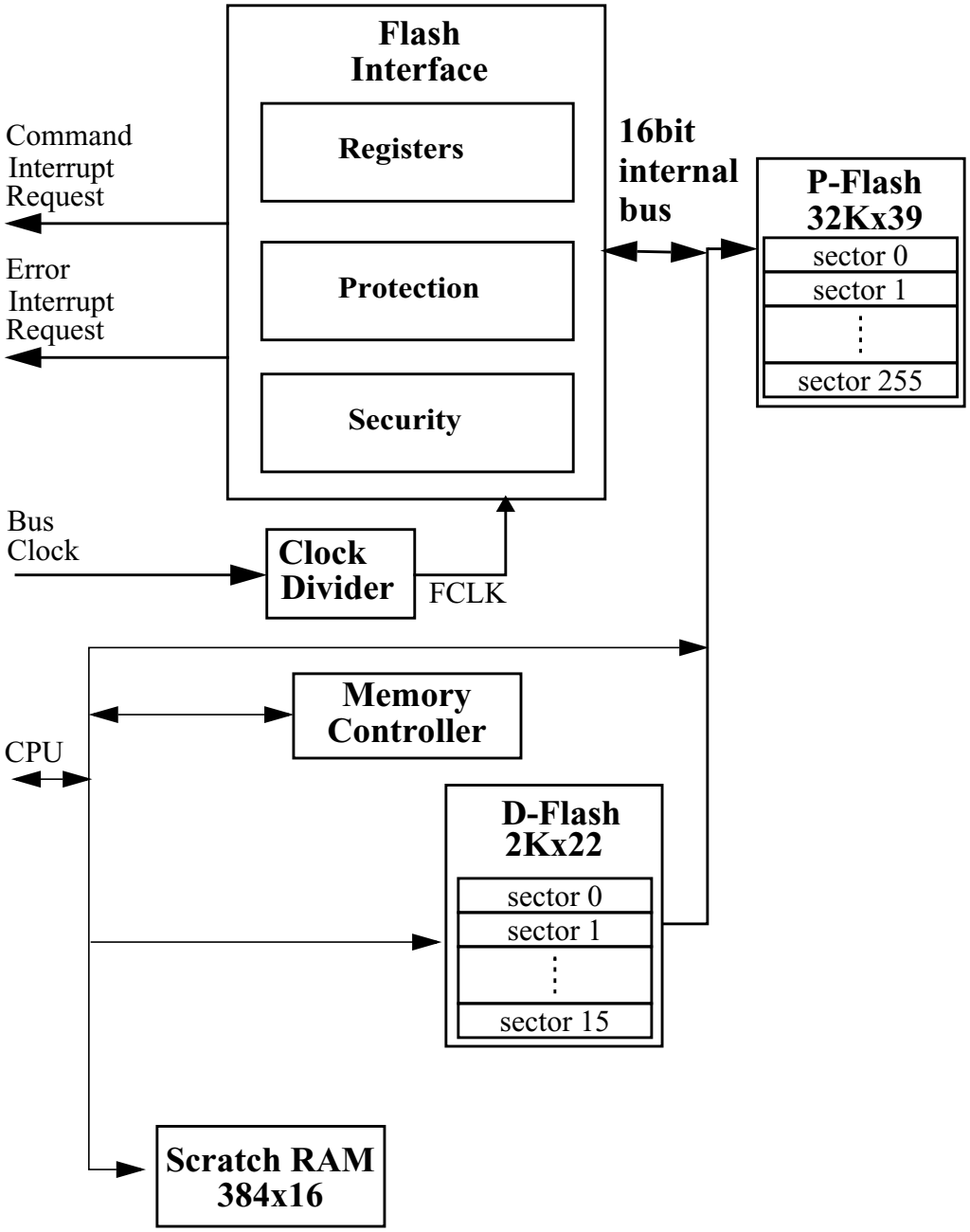

Figure 13-1. FTMRC128K1 Block Diagram

13.2 External Signal Description

The Flash module contains no signals that connect off-chip.

13.3 Memory Map and Registers

This section describes the memory map and registers for the Flash module. Read data from unimplemented memory space in the Flash module is undefined. Write access to unimplemented or reserved memory space in the Flash module will be ignored by the Flash module.

13.3.1 Module Memory Map

The S12 architecture places the P-Flash memory between global addresses 0x2_0000 and 0x3_FFFF as shown in Table 13-2.The P-Flash memory map is shown in Figure 13-2.

Table 13-2. P-Flash Memory Addressing

Global Address	Size (Bytes)	Description
0x2_0000 – 0x3_FFFF	128 K	P-Flash Block Contains Flash Configuration Field (see Table 13-3)

The FPROT register, described in Section 13.3.2.9, can be set to protect regions in the Flash memory from accidental program or erase. Three separate memory regions, one growing upward from global address 0x3_8000 in the Flash memory (called the lower region), one growing downward from global address 0x3_FFFF in the Flash memory (called the higher region), and the remaining addresses in the Flash memory, can be activated for protection. The Flash memory addresses covered by these protectable regions are shown in the P-Flash memory map. The higher address region is mainly targeted to hold the boot loader code since it covers the vector space. Default protection settings as well as security information that allows the MCU to restrict access to the Flash module are stored in the Flash configuration field as described in Table 13-3.

Table 13-3. Flash Configuration Field

Global Address	Size (Bytes)	Description
0x3_FF00-0x3_FF07	8	Backdoor Comparison Key Refer to Section 13.4.5.11, “Verify Backdoor Access Key Command,” and Section 13.5.1, “Unsecuring the MCU using Backdoor Key Access”
0x3_FF08-0x3_FF0B(1)	4	Reserved
0x3_FF0C[1]	1	P-Flash Protection byte. Refer to Section 13.3.2.9, “P-Flash Protection Register (FPROT)”
0x3_FF0D[1]	1	D-Flash Protection byte. Refer to Section 13.3.2.10, “D-Flash Protection Register (DFPROT)”
0x3_FF0E[1]	1	Flash Nonvolatile byte Refer to Section 13.3.2.16, “Flash Option Register (FOPT)”
0x3_FF0F[1]	1	Flash Security byte Refer to Section 13.3.2.2, “Flash Security Register (FSEC)”

1. 0x3FF08-0x3_FF0F form a Flash phrase and must be programmed in a single command write sequence. Each byte in the 0x3_FF08 - 0x3_FF0B reserved field should be programmed to 0xFF.

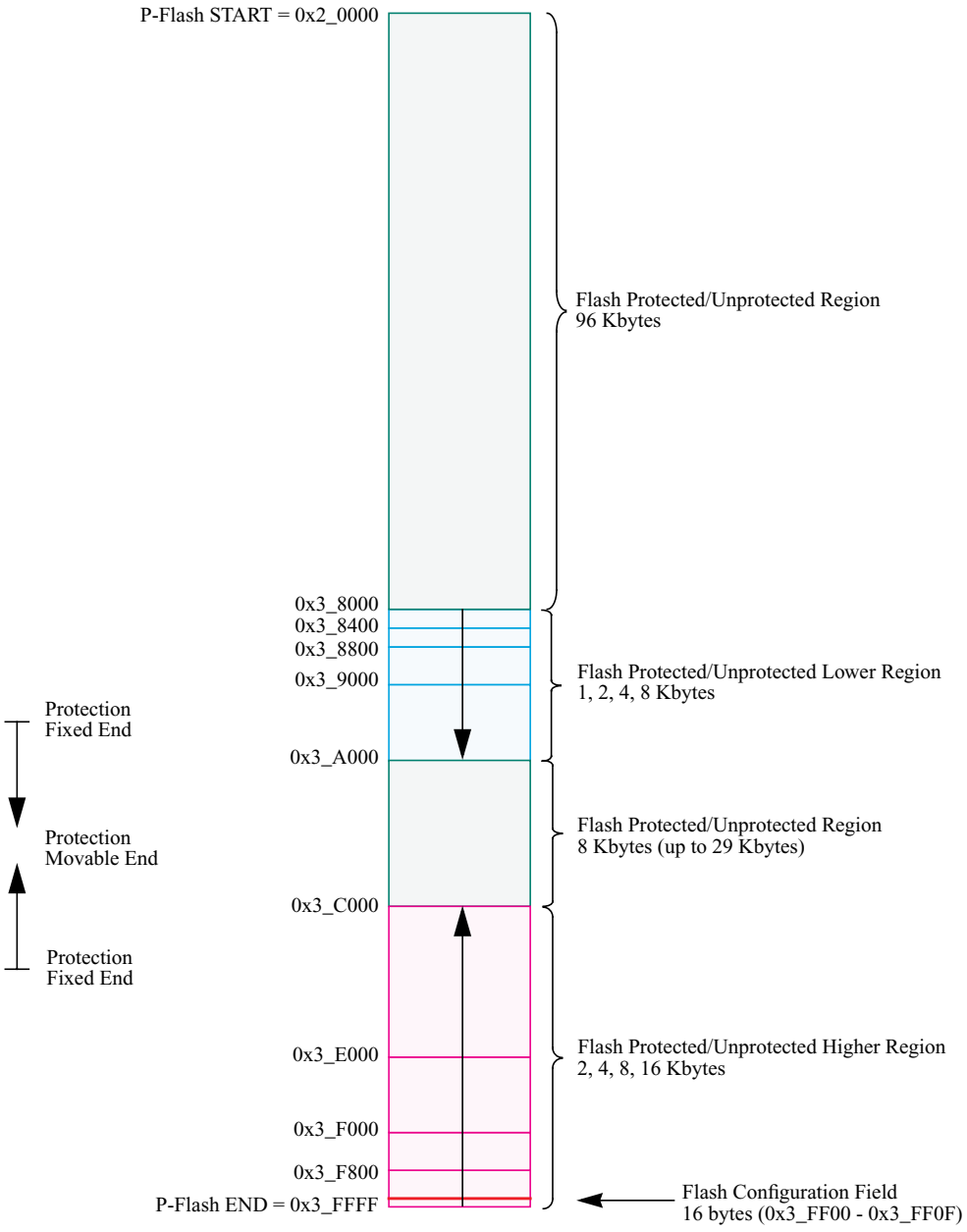

Figure 13-2. P-Flash Memory Map

Table 13-4. Program IFR Fields

Global Address	Size (Bytes)	Field Description
0x0_4000 – 0x0_4007	8	Reserved
0x0_4008 – 0x0_40B5	174	Reserved
0x0_40B6 – 0x0_40B7	2	Version ID[1]

Table 13-4. Program IFR Fields

Global Address	Size (Bytes)	Field Description
0x0_40B8 – 0x0_40BF	8	Reserved
0x0_40C0 – 0x0_40FF	64	Program Once Field Refer to Section 13.4.5.6, “Program Once Command”

1. Used to track firmware patch versions, see Section 13.4.2

Table 13-5. D-Flash and Memory Controller Resource Fields

Global Address	Size (Bytes)	Description
0x0_4000 – 0x0_43FF	1,024	Reserved
0x0_4400 – 0x0_53FF	4,096	D-Flash Memory
0x0_5400 – 0x0_57FF	1,024	Reserved
0x0_5800 – 0x0_5AFF	768	Memory Controller Scratch RAM (RAMON(1) = 1)
0x0_5B00 – 0x0_5FFF	1,280	Reserved
0x0_6000 – 0x0_67FF	2,048	Reserved
0x0_6800 – 0x0_7FFF	6,144	Reserved

1. MMCCTL1 register bit

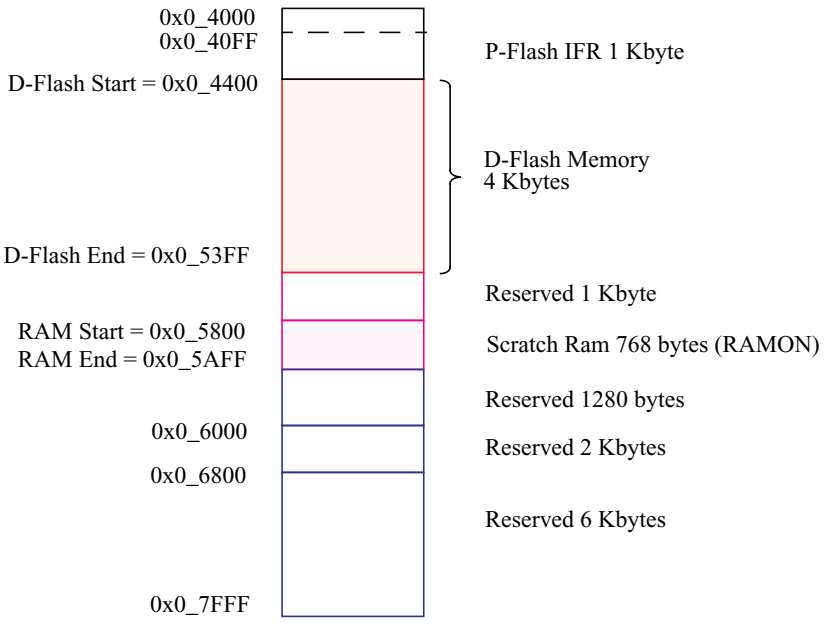

Figure 13-3. D-Flash and Memory Controller Resource Memory Map

13.3.2 Register Descriptions

The Flash module contains a set of 20 control and status registers located between Flash module base + 0x0000 and 0x0013. A summary of the Flash module registers is given in Figure 13-4 with detailed descriptions in the following subsections.

CAUTION

Writes to any Flash register must be avoided while a Flash command is active (CCIF=0) to prevent corruption of Flash register contents and adversely affect Memory Controller behavior.

Address & Name		7	6	5	4	3	2	1	0
0x0000 FCLKDIV	R	FDIVLD	FDIVLCK	FDIV5	FDIV4	FDIV3	FDIV2	FDIV1	FDIV0
	W								
0x0001 FSEC	R	KEYEN1	KEYEN0	RNV5	RNV4	RNV3	RNV2	SEC1	SEC0
	W								
0x0002 FCCOBIX	R	0	0	0	0	0	CCOBIX2	CCOBIX1	CCOBIX0
	W								
0x0003 FRSV0	R	0	0	0	0	0	0	0	0
	W								
0x0004 FCNFG	R	CCIE	0	0	IGNSF	0	0	FDFD	FSFD
	W								
0x0005 FERCNFG	R	0	0	0	0	0	0	DFDIE	SFDIE
	W								
0x0006 FSTAT	R	CCIF	0	ACCERR	FPVIOL	MGBUSY	RSVD	MGSTAT1	MGSTAT0
	W								
0x0007 FERSTAT	R	0	0	0	0	0	0	DFDIF	SFDIF
	W								
0x0008 FPROT	R	FPOPEN	RNV6	FPHDIS	FPHS1	FPHS0	FPLDIS	FPLS1	FPLS0
	W								
0x0009 DFPROT	R	DPOPEN	0	0	0	DPS3	DPS2	DPS1	DPS0
	W								

Figure 13-4. FTMRC128K1 Register Summary

Address & Name		7	6	5	4	3	2	1	0
0x000A FCCOBHI	R	CCOB15	CCOB14	CCOB13	CCOB12	CCOB11	CCOB10	CCOB9	CCOB8
	W								
0x000B FCCOBLO	R	CCOB7	CCOB6	CCOB5	CCOB4	CCOB3	CCOB2	CCOB1	CCOB0
	W								
0x000C FRSV1	R	0	0	0	0	0	0	0	0
	W								
0x000D FRSV2	R	0	0	0	0	0	0	0	0
	W								
0x000E FRSV3	R	0	0	0	0	0	0	0	0
	W								
0x000F FRSV4	R	0	0	0	0	0	0	0	0
	W								
0x0010 FOPT	R	NV7	NV6	NV5	NV4	NV3	NV2	NV1	NV0
	W								
0x0011 FRSV5	R	0	0	0	0	0	0	0	0
	W								
0x0012 FRSV6	R	0	0	0	0	0	0	0	0
	W								
0x0013 FRSV7	R	0	0	0	0	0	0	0	0
	W								

= Unimplemented or Reserved

Figure 13-4. FTMRC128K1 Register Summary (continued)

13.3.2.1 Flash Clock Divider Register (FCLKDIV)

The FCLKDIV register is used to control timed events in program and erase algorithms.

Offset Module Base + 0x0000

	7	6	5	4	3	2	1	0
R	FDIVLD	FDIVLCK	FDIV[5:0]					
W								
Reset	0	0	0	0	0	0	0	0

= Unimplemented or Reserved

Figure 13-5. Flash Clock Divider Register (FCLKDIV)

All bits in the FCLKDIV register are readable, bit 7 is not writable, bit 6 is write-once-hi and controls the writability of the FDIV field.

CAUTION

The FCLKDIV register must never be written to while a Flash command is executing (CCIF=0). The FCLKDIV register is writable during the Flash reset sequence even though CCIF is clear.

Table 13-6. FCLKDIV Field Descriptions

Field	Description
7 FDIVLD	**Clock Divider Loaded** 0 FCLKDIV register has not been written since the last reset 1 FCLKDIV register has been written since the last reset
6 FDIVLCK	**Clock Divider Locked** 0 FDIV field is open for writing 1 FDIV value is locked and cannot be changed. Once the lock bit is set high, only reset can clear this bit and restore writability to the FDIV field.
5–0 FDIV[5:0]	**Clock Divider Bits** — FDIV[5:0] must be set to effectively divide BUSCLK down to 1 MHz to control timed events during Flash program and erase algorithms. Table 13-7 shows recommended values for FDIV[5:0] based on the BUSCLK frequency. Please refer to Section 13.4.3, “Flash Command Operations,” for more information.

Table 13-7. FDIV values for various BUSCLK Frequencies

BUSCLK Frequency (MHz)		FDIV[5:0]	BUSCLK Frequency (MHz)		FDIV[5:0]
MIN(1)	MAX(2)		MIN[1]	MAX[2]	
1.0	1.6	0x00	16.6	17.6	0x10
1.6	2.6	0x01	17.6	18.6	0x11
2.6	3.6	0x02	18.6	19.6	0x12
3.6	4.6	0x03	19.6	20.6	0x13
4.6	5.6	0x04	20.6	21.6	0x14
5.6	6.6	0x05	21.6	22.6	0x15
6.6	7.6	0x06	22.6	23.6	0x16
7.6	8.6	0x07	23.6	24.6	0x17
8.6	9.6	0x08	24.6	25.6	0x18
9.6	10.6	0x09	25.6	26.6	0x19
10.6	11.6	0x0A	26.6	27.6	0x1A
11.6	12.6	0x0B	27.6	28.6	0x1B
12.6	13.6	0x0C	28.6	29.6	0x1C
13.6	14.6	0x0D	29.6	30.6	0x1D
14.6	15.6	0x0E	30.6	31.6	0x1E
15.6	16.6	0x0F	31.6	32.6	0x1F

1. BUSCLK is Greater Than this value.
2. BUSCLK is Less Than or Equal to this value.

13.3.2.2 Flash Security Register (FSEC)

The FSEC register holds all bits associated with the security of the MCU and Flash module.

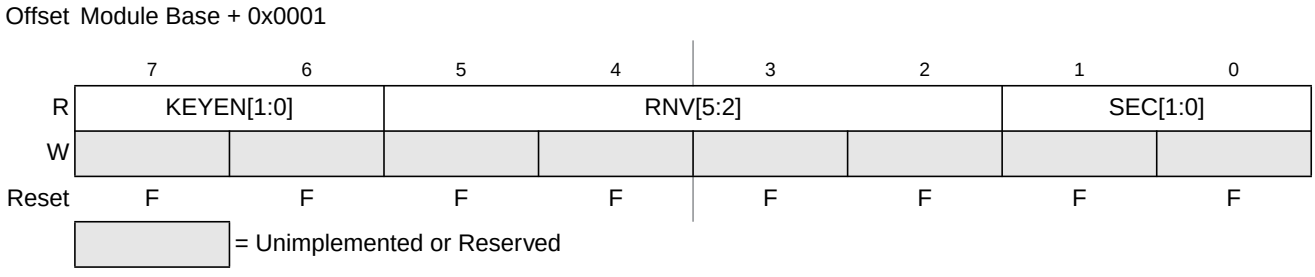

Figure 13-6. Flash Security Register (FSEC)

All bits in the FSEC register are readable but not writable.

During the reset sequence, the FSEC register is loaded with the contents of the Flash security byte in the Flash configuration field at global address 0x3_FF0F located in P-Flash memory (see Table 13-3) as indicated by reset condition F in Figure 13-6. If a double bit fault is detected while reading the P-Flash

phrase containing the Flash security byte during the reset sequence, all bits in the FSEC register will be set to leave the Flash module in a secured state with backdoor key access disabled.

Table 13-8. FSEC Field Descriptions

Field	Description
7–6 KEYEN[1:0]	**Backdoor Key Security Enable Bits** — The KEYEN[1:0] bits define the enabling of backdoor key access to the Flash module as shown in Table 13-9.
5–2 RNV[5:2}	**Reserved Nonvolatile Bits** — The RNV bits should remain in the erased state for future enhancements.
1–0 SEC[1:0]	**Flash Security Bits** — The SEC[1:0] bits define the security state of the MCU as shown in Table 13-10. If the Flash module is unsecured using backdoor key access, the SEC bits are forced to 10.

Table 13-9. Flash KEYEN States

KEYEN[1:0]	Status of Backdoor Key Access
00	DISABLED
01	DISABLED(1)
10	ENABLED
11	DISABLED

1. Preferred KEYEN state to disable backdoor key access.

Table 13-10. Flash Security States

SEC[1:0]	Status of Security
00	SECURED
01	SECURED(1)
10	UNSECURED
11	SECURED

1. Preferred SEC state to set MCU to secured state.

The security function in the Flash module is described in Section 13.5.

13.3.2.3 Flash CCOB Index Register (FCCOBIX)

The FCCOBIX register is used to index the FCCOB register for Flash memory operations.

Offset Module Base + 0x0002

	7	6	5	4	3	2	1	0
R	0	0	0	0	0	CCOBIX[2:0]		
W								
Reset	0	0	0	0	0	0	0	0

= Unimplemented or Reserved

Figure 13-7. FCCOB Index Register (FCCOBIX)

CCOBIX bits are readable and writable while remaining bits read 0 and are not writable.

Table 13-11. FCCOBIX Field Descriptions

Field	Description
2–0 CCOBIX[1:0]	**Common Command Register Index**— The CCOBIX bits are used to select which word of the FCCOB register array is being read or written to. See Section 13.3.2.11, “Flash Common Command Object Register (FCCOB),” for more details.

13.3.2.4 Flash Reserved0 Register (FRSV0)

This Flash register is reserved for factory testing.

Offset Module Base + 0x000C

	7	6	5	4	3	2	1	0
R	0	0	0	0	0	0	0	0
W								
Reset	0	0	0	0	0	0	0	0

= Unimplemented or Reserved

Figure 13-8. Flash Reserved0 Register (FRSV0)

All bits in the FRSV0 register read 0 and are not writable.

13.3.2.5 Flash Configuration Register (FCNFG)

The FCNFG register enables the Flash command complete interrupt and forces ECC faults on Flash array read access from the CPU.

Offset Module Base + 0x0004

	7	6	5	4	3	2	1	0
R	CCIE	0	0	IGNSF	0	0	FDFD	FSFD
W								
Reset	0	0	0	0	0	0	0	0

= Unimplemented or Reserved

Figure 13-9. Flash Configuration Register (FCNFG)

CCIE, IGNSF, FDFD, and FSFD bits are readable and writable while remaining bits read 0 and are not writable.

Table 13-12. FCNFG Field Descriptions

Field	Description
7 CCIE	**Command Complete Interrupt Enable** — The CCIE bit controls interrupt generation when a Flash command has completed. 0 Command complete interrupt disabled 1 An interrupt will be requested whenever the CCIF flag in the FSTAT register is set (see Section 13.3.2.7)
4 IGNSF	**Ignore Single Bit Fault** — The IGNSF controls single bit fault reporting in the FERSTAT register (see Section 13.3.2.8). 0 All single bit faults detected during array reads are reported 1 Single bit faults detected during array reads are not reported and the single bit fault interrupt will not be generated
1 FDFD	**Force Double Bit Fault Detect** — The FDFD bit allows the user to simulate a double bit fault during Flash array read operations and check the associated interrupt routine. The FDFD bit is cleared by writing a 0 to FDFD. The FECCR registers will not be updated during the Flash array read operation with FDFD set unless an actual double bit fault is detected. 0 Flash array read operations will set the DFDIF flag in the FERSTAT register only if a double bit fault is detected 1 Any Flash array read operation will force the DFDIF flag in the FERSTAT register to be set (see Section 13.3.2.7) and an interrupt will be generated as long as the DFDIE interrupt enable in the FERCNFG register is set (see Section 13.3.2.6)
0 FSFD	**Force Single Bit Fault Detect** — The FSFD bit allows the user to simulate a single bit fault during Flash array read operations and check the associated interrupt routine. The FSFD bit is cleared by writing a 0 to FSFD. The FECCR registers will not be updated during the Flash array read operation with FSFD set unless an actual single bit fault is detected. 0 Flash array read operations will set the SFDIF flag in the FERSTAT register only if a single bit fault is detected 1 Flash array read operation will force the SFDIF flag in the FERSTAT register to be set (see Section 13.3.2.7) and an interrupt will be generated as long as the SFDIE interrupt enable in the FERCNFG register is set (see Section 13.3.2.6)

13.3.2.6 Flash Error Configuration Register (FERCNFG)

The FERCNFG register enables the Flash error interrupts for the FERSTAT flags.

Offset Module Base + 0x0005

	7	6	5	4	3	2	1	0
R	0	0	0	0	0	0	DFDIE	SFDIE
W								
Reset	0	0	0	0	0	0	0	0

= Unimplemented or Reserved

Figure 13-10. Flash Error Configuration Register (FERCNFG)

All assigned bits in the FERCNFG register are readable and writable.

Table 13-13. FERCNFG Field Descriptions

Field	Description
1 DFDIE	**Double Bit Fault Detect Interrupt Enable** — The DFDIE bit controls interrupt generation when a double bit fault is detected during a Flash block read operation. 0 DFDIF interrupt disabled 1 An interrupt will be requested whenever the DFDIF flag is set (see Section 13.3.2.8)
0 SFDIE	**Single Bit Fault Detect Interrupt Enable** — The SFDIE bit controls interrupt generation when a single bit fault is detected during a Flash block read operation. 0 SFDIF interrupt disabled whenever the SFDIF flag is set (see Section 13.3.2.8) 1 An interrupt will be requested whenever the SFDIF flag is set (see Section 13.3.2.8)

13.3.2.7 Flash Status Register (FSTAT)

The FSTAT register reports the operational status of the Flash module.

Offset Module Base + 0x0006

	7	6	5	4	3	2	1	0
R	CCIF	0	ACCERR	FPVIOL	MGBUSY	RSVD	MGSTAT[1:0]	
W								
Reset	1	0	0	0	0	0	0(1)	01

= Unimplemented or Reserved

Figure 13-11. Flash Status Register (FSTAT)

1. Reset value can deviate from the value shown if a double bit fault is detected during the reset sequence (see Section 13.6).

CCIF, ACCERR, and FPVIOL bits are readable and writable, MGBUSY and MGSTAT bits are readable but not writable, while remaining bits read 0 and are not writable.

Table 13-14. FSTAT Field Descriptions

Field	Description
7 CCIF	**Command Complete Interrupt Flag** — The CCIF flag indicates that a Flash command has completed. The CCIF flag is cleared by writing a 1 to CCIF to launch a command and CCIF will stay low until command completion or command violation. 0 Flash command in progress 1 Flash command has completed
5 ACCERR	**Flash Access Error Flag** — The ACCERR bit indicates an illegal access has occurred to the Flash memory caused by either a violation of the command write sequence (see Section 13.4.3.2) or issuing an illegal Flash command. While ACCERR is set, the CCIF flag cannot be cleared to launch a command. The ACCERR bit is cleared by writing a 1 to ACCERR. Writing a 0 to the ACCERR bit has no effect on ACCERR. 0 No access error detected 1 Access error detected
4 FPVIOL	**Flash Protection Violation Flag** —The FPVIOL bit indicates an attempt was made to program or erase an address in a protected area of P-Flash or D-Flash memory during a command write sequence. The FPVIOL bit is cleared by writing a 1 to FPVIOL. Writing a 0 to the FPVIOL bit has no effect on FPVIOL. While FPVIOL is set, it is not possible to launch a command or start a command write sequence. 0 No protection violation detected 1 Protection violation detected

Table 13-14. FSTAT Field Descriptions (continued)

Field	Description
3 MGBUSY	**Memory Controller Busy Flag** — The MGBUSY flag reflects the active state of the Memory Controller. 0 Memory Controller is idle 1 Memory Controller is busy executing a Flash command (CCIF = 0)
2 RSVD	**Reserved Bit** — This bit is reserved and always reads 0.
1–0 MGSTAT[1:0]	**Memory Controller Command Completion Status Flag** — One or more MGSTAT flag bits are set if an error is detected during execution of a Flash command or during the Flash reset sequence. See Section 13.4.5, “Flash Command Description,” and Section 13.6, “Initialization” for details.

13.3.2.8 Flash Error Status Register (FERSTAT)

The FERSTAT register reflects the error status of internal Flash operations.

Offset Module Base + 0x0007

	7	6	5	4	3	2	1	0
R	0	0	0	0	0	0	DFDIF	SFDIF
W								
Reset	0	0	0	0	0	0	0	0

= Unimplemented or Reserved

Figure 13-12. Flash Error Status Register (FERSTAT)

All flags in the FERSTAT register are readable and only writable to clear the flag.

Table 13-15. FERSTAT Field Descriptions

Field	Description
1 DFDIF	**Double Bit Fault Detect Interrupt Flag** — The setting of the DFDIF flag indicates that a double bit fault was detected in the stored parity and data bits during a Flash array read operation or that a Flash array read operation was attempted on a Flash block that was under a Flash command operation.(1) The DFDIF flag is cleared by writing a 1 to DFDIF. Writing a 0 to DFDIF has no effect on DFDIF. 0 No double bit fault detected 1 Double bit fault detected or an invalid Flash array read operation attempted
0 SFDIF	**Single Bit Fault Detect Interrupt Flag** — With the IGNSF bit in the FCNFG register clear, the SFDIF flag indicates that a single bit fault was detected in the stored parity and data bits during a Flash array read operation or that a Flash array read operation was attempted on a Flash block that was under a Flash command operation.[1] The SFDIF flag is cleared by writing a 1 to SFDIF. Writing a 0 to SFDIF has no effect on SFDIF. 0 No single bit fault detected 1 Single bit fault detected and corrected or an invalid Flash array read operation attempted

1. The single bit fault and double bit fault flags are mutually exclusive for parity errors (an ECC fault occurrence can be either single fault or double fault but never both). A simultaneous access collision (read attempted while command running) is indicated when both SFDIF and DFDIF flags are high.

13.3.2.9 P-Flash Protection Register (FPROT)

The FPROT register defines which P-Flash sectors are protected against program and erase operations.

Offset Module Base + 0x0008

	7	6	5	4	3	2	1	0
R	FPOPEN	RNV6	FPHDIS	FPHS[1:0]		FPLDIS	FPLS[1:0]	
W								
Reset	F	F	F	F	F	F	F	F

= Unimplemented or Reserved

Figure 13-13. Flash Protection Register (FPROT)

The (unreserved) bits of the FPROT register are writable with the restriction that the size of the protected region can only be increased (see Section 13.3.2.9.1, “P-Flash Protection Restrictions,” and Table 13-20).

During the reset sequence, the FPROT register is loaded with the contents of the P-Flash protection byte in the Flash configuration field at global address 0x3_FF0C located in P-Flash memory (see Table 13-3) as indicated by reset condition ‘F’ in Figure 13-13. To change the P-Flash protection that will be loaded during the reset sequence, the upper sector of the P-Flash memory must be unprotected, then the P-Flash protection byte must be reprogrammed. If a double bit fault is detected while reading the P-Flash phrase containing the P-Flash protection byte during the reset sequence, the FPOPEN bit will be cleared and remaining bits in the FPROT register will be set to leave the P-Flash memory fully protected.

Trying to alter data in any protected area in the P-Flash memory will result in a protection violation error and the FPVIOL bit will be set in the FSTAT register. The block erase of a P-Flash block is not possible if any of the P-Flash sectors contained in the same P-Flash block are protected.

Table 13-16. FPROT Field Descriptions

Field	Description
7 FPOPEN	**Flash Protection Operation Enable** — The FPOPEN bit determines the protection function for program or erase operations as shown in Table 13-17 for the P-Flash block. 0 When FPOPEN is clear, the FPHDIS and FPLDIS bits define unprotected address ranges as specified by the corresponding FPHS and FPLS bits 1 When FPOPEN is set, the FPHDIS and FPLDIS bits enable protection for the address range specified by the corresponding FPHS and FPLS bits
6 RNV[6]	**Reserved Nonvolatile Bit** — The RNV bit should remain in the erased state for future enhancements.
5 FPHDIS	**Flash Protection Higher Address Range Disable** — The FPHDIS bit determines whether there is a protected/unprotected area in a specific region of the P-Flash memory ending with global address 0x3_FFFF. 0 Protection/Unprotection enabled 1 Protection/Unprotection disabled
4–3 FPHS[1:0]	**Flash Protection Higher Address Size** — The FPHS bits determine the size of the protected/unprotected area in P-Flash memory as shown inTable 13-18. The FPHS bits can only be written to while the FPHDIS bit is set.
2 FPLDIS	**Flash Protection Lower Address Range Disable** — The FPLDIS bit determines whether there is a protected/unprotected area in a specific region of the P-Flash memory beginning with global address 0x3_8000. 0 Protection/Unprotection enabled 1 Protection/Unprotection disabled
1–0 FPLS[1:0]	**Flash Protection Lower Address Size** — The FPLS bits determine the size of the protected/unprotected area in P-Flash memory as shown in Table 13-19. The FPLS bits can only be written to while the FPLDIS bit is set.

Table 13-17. P-Flash Protection Function

FPOPEN	FPHDIS	FPLDIS	Function(1)
1	1	1	No P-Flash Protection
1	1	0	Protected Low Range
1	0	1	Protected High Range
1	0	0	Protected High and Low Ranges
0	1	1	Full P-Flash Memory Protected
0	1	0	Unprotected Low Range
0	0	1	Unprotected High Range
0	0	0	Unprotected High and Low Ranges

1. For range sizes, refer to Table 13-18 and Table 13-19.

Table 13-18. P-Flash Protection Higher Address Range

FPHS[1:0]	Global Address Range	Protected Size
00	0x3_F800–0x3_FFFF	2 Kbytes
01	0x3_F000–0x3_FFFF	4 Kbytes
10	0x3_E000–0x3_FFFF	8 Kbytes
11	0x3_C000–0x3_FFFF	16 Kbytes

Table 13-19. P-Flash Protection Lower Address Range

FPLS[1:0]	Global Address Range	Protected Size
00	0x3_8000–0x3_83FF	1 Kbyte
01	0x3_8000–0x3_87FF	2 Kbytes
10	0x3_8000–0x3_8FFF	4 Kbytes
11	0x3_8000–0x3_9FFF	8 Kbytes

All possible P-Flash protection scenarios are shown in Figure 13-14. Although the protection scheme is loaded from the Flash memory at global address 0x3_FF0C during the reset sequence, it can be changed by the user. The P-Flash protection scheme can be used by applications requiring reprogramming in single chip mode while providing as much protection as possible if reprogramming is not required.

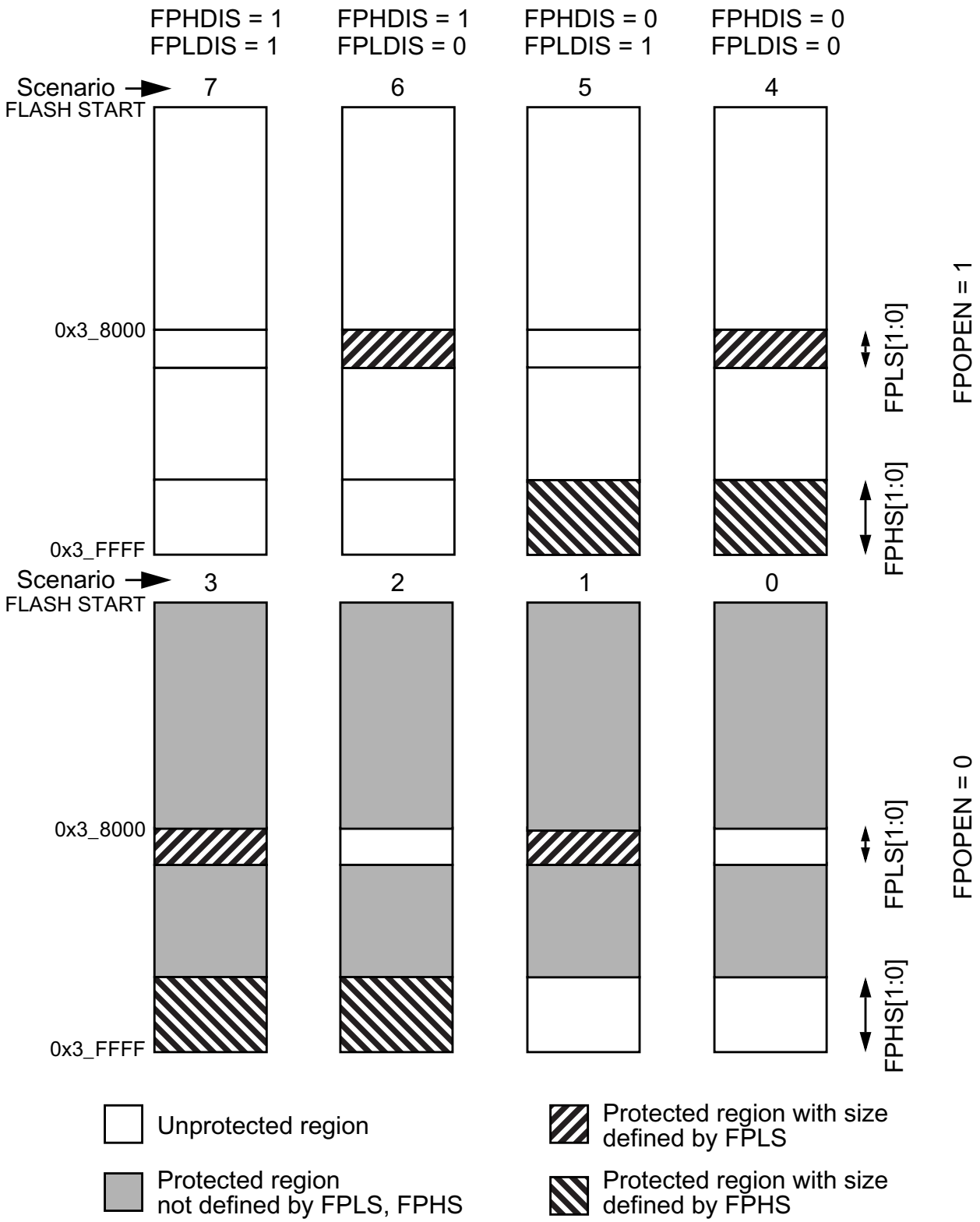

Figure 13-14. P-Flash Protection Scenarios

13.3.2.9.1 P-Flash Protection Restrictions

The general guideline is that P-Flash protection can only be added and not removed. Table 13-20 specifies all valid transitions between P-Flash protection scenarios. Any attempt to write an invalid scenario to the FPROT register will be ignored. The contents of the FPROT register reflect the active protection scenario. See the FPHS and FPLS bit descriptions for additional restrictions.

Table 13-20. P-Flash Protection Scenario Transitions

From Protection Scenario	To Protection Scenario[1]							
	0	1	2	3	4	5	6	7
0	X	X	X	X				
1		X		X				
2			X	X				
3				X				
4				X	X			
5			X	X	X	X		
6		X		X	X		X	
7	X	X	X	X	X	X	X	X

1. Allowed transitions marked with X, see Figure 13-14 for a definition of the scenarios.

13.3.2.10 D-Flash Protection Register (DFPROT)

The DFPROT register defines which D-Flash sectors are protected against program and erase operations.

Offset Module Base + 0x0009

	7	6	5	4	3	2	1	0
R	DPOPEN	0	0	0	DPS[3:0]			
W								
Reset	F	0	0	0	F	F	F	F

= Unimplemented or Reserved

Figure 13-15. D-Flash Protection Register (DFPROT)

The (unreserved) bits of the DFPROT register are writable with the restriction that protection can be added but not removed. Writes must increase the DPS value and the DPOPEN bit can only be written from 1 (protection disabled) to 0 (protection enabled). If the DPOPEN bit is set, the state of the DPS bits is irrelevant.

During the reset sequence, the DFPROT register is loaded with the contents of the D-Flash protection byte in the Flash configuration field at global address 0x3_FF0D located in P-Flash memory (see Table 13-3) as indicated by reset condition F in Figure 13-15. To change the D-Flash protection that will be loaded during the reset sequence, the P-Flash sector containing the D-Flash protection byte must be unprotected, then the D-Flash protection byte must be programmed. If a double bit fault is detected while reading the

P-Flash phrase containing the D-Flash protection byte during the reset sequence, the DPOPEN bit will be cleared and DPS bits will be set to leave the D-Flash memory fully protected.

Trying to alter data in any protected area in the D-Flash memory will result in a protection violation error and the FPVIOL bit will be set in the FSTAT register. Block erase of the D-Flash memory is not possible if any of the D-Flash sectors are protected.

Table 13-21. DFPROT Field Descriptions

Field	Description
7 DPOPEN	**D-Flash Protection Control** 0 Enables D-Flash memory protection from program and erase with protected address range defined by DPS bits 1 Disables D-Flash memory protection from program and erase
3–0 DPS[3:0]	**D-Flash Protection Size** — The DPS[3:0] bits determine the size of the protected area in the D-Flash memory as shown in Table 13-22.

Table 13-22. D-Flash Protection Address Range

DPS[3:0]	Global Address Range	Protected Size
0000	0x0_4400 – 0x0_44FF	256 bytes
0001	0x0_4400 – 0x0_45FF	512 bytes
0010	0x0_4400 – 0x0_46FF	768 bytes
0011	0x0_4400 – 0x0_47FF	1024 bytes
0100	0x0_4400 – 0x0_48FF	1280 bytes
0101	0x0_4400 – 0x0_49FF	1536 bytes
0110	0x0_4400 – 0x0_4AFF	1792 bytes
0111	0x0_4400 – 0x0_4BFF	2048 bytes
1000	0x0_4400 – 0x0_4CFF	2304 bytes
1001	0x0_4400 – 0x0_4DFF	2560 bytes
1010	0x0_4400 – 0x0_4EFF	2816 bytes
1011	0x0_4400 – 0x0_4FFF	3072 bytes
1100	0x0_4400 – 0x0_50FF	3328 bytes
1101	0x0_4400 – 0x0_51FF	3584 bytes
1110	0x0_4400 – 0x0_52FF	3840 bytes
1111	0x0_4400 – 0x0_53FF	4096 bytes

13.3.2.11 Flash Common Command Object Register (FCCOB)

The FCCOB is an array of six words addressed via the CCOBIX index found in the FCCOBIX register. Byte wide reads and writes are allowed to the FCCOB register.

Offset Module Base + 0x000A

	7	6	5	4	3	2	1	0
R W	CCOB[15:8]							
Reset	0	0	0	0	0	0	0	0

Figure 13-16. Flash Common Command Object High Register (FCCOBHI)

Offset Module Base + 0x000B

	7	6	5	4	3	2	1	0
R W	CCOB[7:0]							
Reset	0	0	0	0	0	0	0	0

Figure 13-17. Flash Common Command Object Low Register (FCCOBLO)

13.3.2.11.1 FCCOB - NVM Command Mode

NVM command mode uses the indexed FCCOB register to provide a command code and its relevant parameters to the Memory Controller. The user first sets up all required FCCOB fields and then initiates the command's execution by writing a 1 to the CCIF bit in the FSTAT register (a 1 written by the user clears the CCIF command completion flag to 0). When the user clears the CCIF bit in the FSTAT register all FCCOB parameter fields are locked and cannot be changed by the user until the command completes (as evidenced by the Memory Controller returning CCIF to 1). Some commands return information to the FCCOB register array.

The generic format for the FCCOB parameter fields in NVM command mode is shown in Table 13-23. The return values are available for reading after the CCIF flag in the FSTAT register has been returned to 1 by the Memory Controller. Writes to the unimplemented parameter fields (CCOBIX = 110 and CCOBIX = 111) are ignored with reads from these fields returning 0x0000.

Table 13-23 shows the generic Flash command format. The high byte of the first word in the CCOB array contains the command code, followed by the parameters for this specific Flash command. For details on the FCCOB settings required by each command, see the Flash command descriptions in Section 13.4.5.

Table 13-23. FCCOB - NVM Command Mode (Typical Usage)

CCOBIX[2:0]	Byte	FCCOB Parameter Fields (NVM Command Mode)
000	HI	FCMD[7:0] defining Flash command
	LO	6'h0, Global address [17:16]
001	HI	Global address [15:8]
	LO	Global address [7:0]
010	HI	Data 0 [15:8]
	LO	Data 0 [7:0]

Table 13-23. FCCOB - NVM Command Mode (Typical Usage)

CCOBIX[2:0]	Byte	FCCOB Parameter Fields (NVM Command Mode)
011	HI	Data 1 [15:8]
	LO	Data 1 [7:0]
100	HI	Data 2 [15:8]
	LO	Data 2 [7:0]
101	HI	Data 3 [15:8]
	LO	Data 3 [7:0]

13.3.2.12 Flash Reserved1 Register (FRSV1)

This Flash register is reserved for factory testing.

Offset Module Base + 0x000C

	7	6	5	4	3	2	1	0
R	0	0	0	0	0	0	0	0
W								
Reset	0	0	0	0	0	0	0	0

= Unimplemented or Reserved

Figure 13-18. Flash Reserved1 Register (FRSV1)

All bits in the FRSV1 register read 0 and are not writable.

13.3.2.13 Flash Reserved2 Register (FRSV2)

This Flash register is reserved for factory testing.

Offset Module Base + 0x000D

	7	6	5	4	3	2	1	0
R	0	0	0	0	0	0	0	0
W								
Reset	0	0	0	0	0	0	0	0

= Unimplemented or Reserved

Figure 13-19. Flash Reserved2 Register (FRSV2)

All bits in the FRSV2 register read 0 and are not writable.

13.3.2.14 Flash Reserved3 Register (FRSV3)

This Flash register is reserved for factory testing.

Offset Module Base + 0x000E

	7	6	5	4	3	2	1	0
R	0	0	0	0	0	0	0	0
W								
Reset	0	0	0	0	0	0	0	0

= Unimplemented or Reserved

Figure 13-20. Flash Reserved3 Register (FRSV3)

All bits in the FRSV3 register read 0 and are not writable.

13.3.2.15 Flash Reserved4 Register (FRSV4)

This Flash register is reserved for factory testing.

Offset Module Base + 0x000F

	7	6	5	4	3	2	1	0
R	0	0	0	0	0	0	0	0
W								
Reset	0	0	0	0	0	0	0	0

= Unimplemented or Reserved

Figure 13-21. Flash Reserved4 Register (FRSV4)

All bits in the FRSV4 register read 0 and are not writable.

13.3.2.16 Flash Option Register (FOPT)

The FOPT register is the Flash option register.

Offset Module Base + 0x0010

	7	6	5	4	3	2	1	0
R	NV[7:0]							
W								
Reset	F	F	F	F	F	F	F	F

= Unimplemented or Reserved

Figure 13-22. Flash Option Register (FOPT)

All bits in the FOPT register are readable but are not writable.

During the reset sequence, the FOPT register is loaded from the Flash nonvolatile byte in the Flash configuration field at global address 0x3_FF0E located in P-Flash memory (see Table 13-3) as indicated by reset condition F in Figure 13-22. If a double bit fault is detected while reading the P-Flash phrase containing the Flash nonvolatile byte during the reset sequence, all bits in the FOPT register will be set.

Table 13-24. FOPT Field Descriptions

Field	Description
7–0 NV[7:0]	**Nonvolatile Bits** — The NV[7:0] bits are available as nonvolatile bits. Refer to the device user guide for proper use of the NV bits.

13.3.2.17 Flash Reserved5 Register (FRSV5)

This Flash register is reserved for factory testing.

Offset Module Base + 0x0011

	7	6	5	4	3	2	1	0
R	0	0	0	0	0	0	0	0
W								
Reset	0	0	0	0	0	0	0	0

= Unimplemented or Reserved

Figure 13-23. Flash Reserved5 Register (FRSV5)

All bits in the FRSV5 register read 0 and are not writable.

13.3.2.18 Flash Reserved6 Register (FRSV6)

This Flash register is reserved for factory testing.

Offset Module Base + 0x0012

	7	6	5	4	3	2	1	0
R	0	0	0	0	0	0	0	0
W								
Reset	0	0	0	0	0	0	0	0

= Unimplemented or Reserved

Figure 13-24. Flash Reserved6 Register (FRSV6)

All bits in the FRSV6 register read 0 and are not writable.

13.3.2.19 Flash Reserved7 Register (FRSV7)

This Flash register is reserved for factory testing.

Offset Module Base + 0x0013

	7	6	5	4	3	2	1	0
R	0	0	0	0	0	0	0	0
W								
Reset	0	0	0	0	0	0	0	0

= Unimplemented or Reserved

Figure 13-25. Flash Reserved7 Register (FRSV7)

All bits in the FRSV7 register read 0 and are not writable.

13.4 Functional Description

13.4.1 Modes of Operation

The FTMRC128K1 module provides the modes of operation shown in Table 13-25. The operating mode is determined by module-level inputs and affects the FCLKDIV, FCNFG, and DFPROT registers, Scratch RAM writes, and the command set availability (see Table 13-27).

Table 13-25. Modes and Mode Control Inputs

Operating Mode	FTMRC Input
	mmc_mode_ss_t2
Normal:	0
Special:	1

13.4.2 IFR Version ID Word

The version ID word is stored in the IFR at address 0x0_40B6. The contents of the word are defined in Table 13-26.

Table 13-26. IFR Version ID Fields

[15:4]	[3:0]
Reserved	VERNUM

- VERNUM: Version number. The first version is number 0b_0001 with both 0b_0000 and 0b_1111 meaning ‘none’.

13.4.3 Flash Command Operations

Flash command operations are used to modify Flash memory contents.

The next sections describe:

- How to write the FCLKDIV register that is used to generate a time base (FCLK) derived from BUSCLK for Flash program and erase command operations
- The command write sequence used to set Flash command parameters and launch execution
- Valid Flash commands available for execution

13.4.3.1 Writing the FCLKDIV Register

Prior to issuing any Flash program or erase command after a reset, the user is required to write the FCLKDIV register to divide BUSCLK down to a target FCLK of 1 MHz. Table 13-7 shows recommended values for the FDIV field based on BUSCLK frequency.

NOTE

Programming or erasing the Flash memory cannot be performed if the bus clock runs at less than 0.8 MHz. Setting FDIV too high can destroy the Flash memory due to overstress. Setting FDIV too low can result in incomplete programming or erasure of the Flash memory cells.

When the FCLKDIV register is written, the FDIVLD bit is set automatically. If the FDIVLD bit is 0, the FCLKDIV register has not been written since the last reset. If the FCLKDIV register has not been written, any Flash program or erase command loaded during a command write sequence will not execute and the ACCERR bit in the FSTAT register will set.

13.4.3.2 Command Write Sequence

The Memory Controller will launch all valid Flash commands entered using a command write sequence.

Before launching a command, the ACCERR and FPVIOL bits in the FSTAT register must be clear (see Section 13.3.2.7) and the CCIF flag should be tested to determine the status of the current command write sequence. If CCIF is 0, the previous command write sequence is still active, a new command write sequence cannot be started, and all writes to the FCCOB register are ignored.

CAUTION

Writes to any Flash register must be avoided while a Flash command is active (CCIF=0) to prevent corruption of Flash register contents and Memory Controller behavior.

13.4.3.2.1 Define FCCOB Contents

The FCCOB parameter fields must be loaded with all required parameters for the Flash command being executed. Access to the FCCOB parameter fields is controlled via the CCOBIX bits in the FCCOBIX register (see Section 13.3.2.3).

The contents of the FCCOB parameter fields are transferred to the Memory Controller when the user clears the CCIF command completion flag in the FSTAT register (writing 1 clears the CCIF to 0). The CCIF flag will remain clear until the Flash command has completed. Upon completion, the Memory Controller will return CCIF to 1 and the FCCOB register will be used to communicate any results. The flow for a generic command write sequence is shown in Figure 13-26.

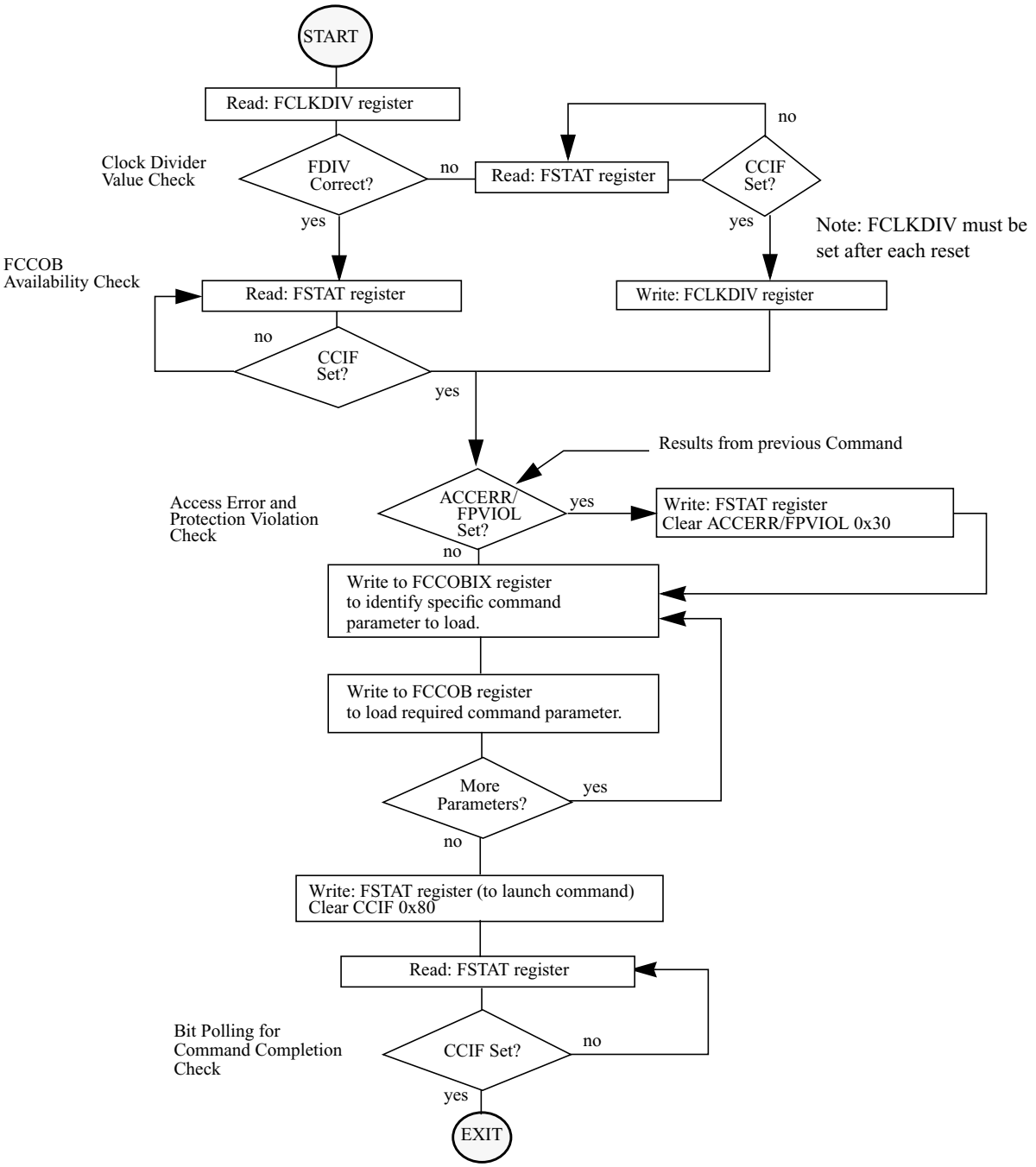

Figure 13-26. Generic Flash Command Write Sequence Flowchart

13.4.3.3 Valid Flash Module Commands

Table 13-27. Flash Commands by Mode

FCMD	Command	Unsecured		Secured	
		NS (1)	SS(2)	NS (3)	SS(4)
0x01	Erase Verify All Blocks	*	*	*	*
0x02	Erase Verify Block	*	*	*	*
0x03	Erase Verify P-Flash Section	*	*	*	
0x04	Read Once	*	*	*	
0x06	Program P-Flash	*	*	*	
0x07	Program Once	*	*	*	
0x08	Erase All Blocks		*		*
0x09	Erase Flash Block	*	*	*	
0x0A	Erase P-Flash Sector	*	*	*	
0x0B	Unsecure Flash		*		*
0x0C	Verify Backdoor Access Key	*		*	
0x0D	Set User Margin Level	*	*	*	
0x0E	Set Field Margin Level		*		
0x10	Erase Verify D-Flash Section	*	*	*	
0x11	Program D-Flash	*	*	*	
0x12	Erase D-Flash Sector	*	*	*	

1. Unsecured Normal Single Chip mode.
2. Unsecured Special Single Chip mode.
3. Secured Normal Single Chip mode.
4. Secured Special Single Chip mode.

13.4.3.4 P-Flash Commands

Table 13-28 summarizes the valid P-Flash commands along with the effects of the commands on the P-Flash block and other resources within the Flash module.

Table 13-28. P-Flash Commands

FCMD	Command	Function on P-Flash Memory
0x01	Erase Verify All Blocks	Verify that all P-Flash (and D-Flash) blocks are erased.
0x02	Erase Verify Block	Verify that a P-Flash block is erased.
0x03	Erase Verify P-Flash Section	Verify that a given number of words starting at the address provided are erased.

Table 13-28. P-Flash Commands

FCMD	Command	Function on P-Flash Memory
0x04	Read Once	Read a dedicated 64 byte field in the nonvolatile information register in P-Flash block that was previously programmed using the Program Once command.
0x06	Program P-Flash	Program a phrase in a P-Flash block.
0x07	Program Once	Program a dedicated 64 byte field in the nonvolatile information register in P-Flash block that is allowed to be programmed only once.
0x08	Erase All Blocks	Erase all P-Flash (and D-Flash) blocks. An erase of all Flash blocks is only possible when the FPLDIS, FPHDIS, and FPOPEN bits in the FPROT register and the DPOPEN bit in the DFPROT register are set prior to launching the command.
0x09	Erase Flash Block	Erase a P-Flash (or D-Flash) block. An erase of the full P-Flash block is only possible when FPLDIS, FPHDIS and FPOPEN bits in the FPROT register are set prior to launching the command.
0x0A	Erase P-Flash Sector	Erase all bytes in a P-Flash sector.
0x0B	Unsecure Flash	Supports a method of releasing MCU security by erasing all P-Flash (and D-Flash) blocks and verifying that all P-Flash (and D-Flash) blocks are erased.
0x0C	Verify Backdoor Access Key	Supports a method of releasing MCU security by verifying a set of security keys.
0x0D	Set User Margin Level	Specifies a user margin read level for all P-Flash blocks.
0x0E	Set Field Margin Level	Specifies a field margin read level for all P-Flash blocks (special modes only).

13.4.3.5 D-Flash Commands

Table 13-29 summarizes the valid D-Flash commands along with the effects of the commands on the D-Flash block.

Table 13-29. D-Flash Commands

FCMD	Command	Function on D-Flash Memory
0x01	Erase Verify All Blocks	Verify that all D-Flash (and P-Flash) blocks are erased.
0x02	Erase Verify Block	Verify that the D-Flash block is erased.
0x08	Erase All Blocks	Erase all D-Flash (and P-Flash) blocks. An erase of all Flash blocks is only possible when the FPLDIS, FPHDIS, and FPOPEN bits in the FPROT register and the DPOPEN bit in the DFPROT register are set prior to launching the command.
0x09	Erase Flash Block	Erase a D-Flash (or P-Flash) block. An erase of the full D-Flash block is only possible when DPOPEN bit in the DFPROT register is set prior to launching the command.
0x0B	Unsecure Flash	Supports a method of releasing MCU security by erasing all D-Flash (and P-Flash) blocks and verifying that all D-Flash (and P-Flash) blocks are erased.
0x0D	Set User Margin Level	Specifies a user margin read level for the D-Flash block.
0x0E	Set Field Margin Level	Specifies a field margin read level for the D-Flash block (special modes only).

Table 13-29. D-Flash Commands

FCMD	Command	Function on D-Flash Memory
0x10	Erase Verify D-Flash Section	Verify that a given number of words starting at the address provided are erased.
0x11	Program D-Flash	Program up to four words in the D-Flash block.
0x12	Erase D-Flash Sector	Erase all bytes in a sector of the D-Flash block.

13.4.4 Allowed Simultaneous P-Flash and D-Flash Operations

Only the operations marked ‘OK’ in Table 13-30 are permitted to be run simultaneously on the Program Flash and Data Flash blocks. Some operations cannot be executed simultaneously because certain hardware resources are shared by the two memories. The priority has been placed on permitting Program Flash reads while program and erase operations execute on the Data Flash, providing read (P-Flash) while write (D-Flash) functionality.

Table 13-30. Allowed P-Flash and D-Flash Simultaneous Operations

	Data Flash				
Program Flash	**Read**	**Margin Read[1]**	**Program**	**Sector Erase**	**Mass Erase[3]**
Read		OK	OK	OK	
Margin Read(1)		OK(2)			
Program					
Sector Erase				OK	
Mass Erase(3)					OK

1. A ‘Margin Read’ is any read after executing the margin setting commands ‘Set User Margin Level’ or ‘Set Field Margin Level’ with anything but the ‘normal’ level specified.
2. See the Note on margin settings in Section 13.4.5.12 and Section 13.4.5.13.
3. The ‘Mass Erase’ operations are commands ‘Erase All Blocks’ and ‘Erase Flash Block’

13.4.5 Flash Command Description

This section provides details of all available Flash commands launched by a command write sequence. The ACCERR bit in the FSTAT register will be set during the command write sequence if any of the following illegal steps are performed, causing the command not to be processed by the Memory Controller:

- Starting any command write sequence that programs or erases Flash memory before initializing the FCLKDIV register
- Writing an invalid command as part of the command write sequence
- For additional possible errors, refer to the error handling table provided for each command

If a Flash block is read during execution of an algorithm (CCIF = 0) on that same block, the read operation will return invalid data. If the SFDIF or DFDIF flags were not previously set when the invalid read operation occurred, both the SFDIF and DFDIF flags will be set.

If the ACCERR or FPVIOL bits are set in the FSTAT register, the user must clear these bits before starting any command write sequence (see Section 13.3.2.7).

CAUTION

A Flash word or phrase must be in the erased state before being programmed. Cumulative programming of bits within a Flash word or phrase is not allowed.

13.4.5.1 Erase Verify All Blocks Command

The Erase Verify All Blocks command will verify that all P-Flash and D-Flash blocks have been erased.

Table 13-31. Erase Verify All Blocks Command FCCOB Requirements

CCOBIX[2:0]	FCCOB Parameters	
000	0x01	Not required

Upon clearing CCIF to launch the Erase Verify All Blocks command, the Memory Controller will verify that the entire Flash memory space is erased. The CCIF flag will set after the Erase Verify All Blocks operation has completed.

Table 13-32. Erase Verify All Blocks Command Error Handling

Register	Error Bit	Error Condition
FSTAT	ACCERR	Set if CCOBIX[2:0] != 000 at command launch
	FPVIOL	None
	MGSTAT1	Set if any errors have been encountered during the read
	MGSTAT0	Set if any non-correctable errors have been encountered during the read

13.4.5.2 Erase Verify Block Command

The Erase Verify Block command allows the user to verify that an entire P-Flash or D-Flash block has been erased. The FCCOB upper global address bits determine which block must be verified.

Table 13-33. Erase Verify Block Command FCCOB Requirements

CCOBIX[2:0]	FCCOB Parameters	
000	0x02	Global address [17:16] of the Flash block to be verified.

Upon clearing CCIF to launch the Erase Verify Block command, the Memory Controller will verify that the selected P-Flash or D-Flash block is erased. The CCIF flag will set after the Erase Verify Block operation has completed.

Table 13-34. Erase Verify Block Command Error Handling

Register	Error Bit	Error Condition
FSTAT	ACCERR	Set if CCOBIX[2:0] != 000 at command launch
		Set if an invalid global address [17:16] is supplied
	FPVIOL	None
	MGSTAT1	Set if any errors have been encountered during the read
	MGSTAT0	Set if any non-correctable errors have been encountered during the read

13.4.5.3 Erase Verify P-Flash Section Command

The Erase Verify P-Flash Section command will verify that a section of code in the P-Flash memory is erased. The Erase Verify P-Flash Section command defines the starting point of the code to be verified and the number of phrases.

Table 13-35. Erase Verify P-Flash Section Command FCCOB Requirements

CCOBIX[2:0]	FCCOB Parameters	
000	0x03	Global address [17:16] of a P-Flash block
001	Global address [15:0] of the first phrase to be verified	
010	Number of phrases to be verified	

Upon clearing CCIF to launch the Erase Verify P-Flash Section command, the Memory Controller will verify the selected section of Flash memory is erased. The CCIF flag will set after the Erase Verify P-Flash Section operation has completed.

Table 13-36. Erase Verify P-Flash Section Command Error Handling

Register	Error Bit	Error Condition
FSTAT	ACCERR	Set if CCOBIX[2:0] != 010 at command launch
		Set if command not available in current mode (see Table 13-27)
		Set if an invalid global address [17:0] is supplied
		Set if a misaligned phrase address is supplied (global address [2:0] != 000)
		Set if the requested section crosses a 128 Kbyte boundary
	FPVIOL	None
	MGSTAT1	Set if any errors have been encountered during the read
	MGSTAT0	Set if any non-correctable errors have been encountered during the read

13.4.5.4 Read Once Command

The Read Once command provides read access to a reserved 64 byte field (8 phrases) located in the nonvolatile information register of P-Flash. The Read Once field is programmed using the Program Once

command described in Section 13.4.5.6. The Read Once command must not be executed from the Flash block containing the Program Once reserved field to avoid code runaway.

Table 13-37. Read Once Command FCCOB Requirements

CCOBIX[2:0]	FCCOB Parameters	
000	0x04	Not Required
001	Read Once phrase index (0x0000 - 0x0007)	
010	Read Once word 0 value	
011	Read Once word 1 value	
100	Read Once word 2 value	
101	Read Once word 3 value	

Upon clearing CCIF to launch the Read Once command, a Read Once phrase is fetched and stored in the FCCOB indexed register. The CCIF flag will set after the Read Once operation has completed. Valid phrase index values for the Read Once command range from 0x0000 to 0x0007. During execution of the Read Once command, any attempt to read addresses within P-Flash block will return invalid data.

Table 13-38. Read Once Command Error Handling

Register	Error Bit	Error Condition
FSTAT	ACCERR	Set if CCOBIX[2:0] != 001 at command launch
		Set if command not available in current mode (see Table 13-27)
		Set if an invalid phrase index is supplied
	FPVIOL	None
	MGSTAT1	Set if any errors have been encountered during the read
	MGSTAT0	Set if any non-correctable errors have been encountered during the read

13.4.5.5 Program P-Flash Command

The Program P-Flash operation will program a previously erased phrase in the P-Flash memory using an embedded algorithm.

CAUTION

A P-Flash phrase must be in the erased state before being programmed. Cumulative programming of bits within a Flash phrase is not allowed.

Table 13-39. Program P-Flash Command FCCOB Requirements

CCOBIX[2:0]	FCCOB Parameters	
000	0x06	Global address [17:16] to identify P-Flash block
001	Global address [15:0] of phrase location to be programmed(1)	
010	Word 0 program value	

Table 13-39. Program P-Flash Command FCCOB Requirements

CCOBIX[2:0]	FCCOB Parameters
011	Word 1 program value
100	Word 2 program value
101	Word 3 program value

1. Global address [2:0] must be 000

Upon clearing CCIF to launch the Program P-Flash command, the Memory Controller will program the data words to the supplied global address and will then proceed to verify the data words read back as expected. The CCIF flag will set after the Program P-Flash operation has completed.

Table 13-40. Program P-Flash Command Error Handling

Register	Error Bit	Error Condition
FSTAT	ACCERR	Set if CCOBIX[2:0] != 101 at command launch
		Set if command not available in current mode (see Table 13-27)
		Set if an invalid global address [17:0] is supplied
		Set if a misaligned phrase address is supplied (global address [2:0] != 000)
	FPVIOL	Set if the global address [17:0] points to a protected area
	MGSTAT1	Set if any errors have been encountered during the verify operation
	MGSTAT0	Set if any non-correctable errors have been encountered during the verify operation

13.4.5.6 Program Once Command

The Program Once command restricts programming to a reserved 64 byte field (8 phrases) in the nonvolatile information register located in P-Flash. The Program Once reserved field can be read using the Read Once command as described in Section 13.4.5.4. The Program Once command must only be issued once since the nonvolatile information register in P-Flash cannot be erased. The Program Once command must not be executed from the Flash block containing the Program Once reserved field to avoid code runaway.

Table 13-41. Program Once Command FCCOB Requirements

CCOBIX[2:0]	FCCOB Parameters	
000	0x07	Not Required
001	Program Once phrase index (0x0000 - 0x0007)	
010	Program Once word 0 value	
011	Program Once word 1 value	
100	Program Once word 2 value	
101	Program Once word 3 value	

Upon clearing CCIF to launch the Program Once command, the Memory Controller first verifies that the selected phrase is erased. If erased, then the selected phrase will be programmed and then verified with read back. The CCIF flag will remain clear, setting only after the Program Once operation has completed.

The reserved nonvolatile information register accessed by the Program Once command cannot be erased and any attempt to program one of these phrases a second time will not be allowed. Valid phrase index values for the Program Once command range from 0x0000 to 0x0007. During execution of the Program Once command, any attempt to read addresses within P-Flash will return invalid data.

Table 13-42. Program Once Command Error Handling

Register	Error Bit	Error Condition
FSTAT	ACCERR	Set if CCOBIX[2:0] != 101 at command launch
		Set if command not available in current mode (see Table 13-27)
		Set if an invalid phrase index is supplied
		Set if the requested phrase has already been programmed(1)
	FPVIOL	None
	MGSTAT1	Set if any errors have been encountered during the verify operation
	MGSTAT0	Set if any non-correctable errors have been encountered during the verify operation

1. If a Program Once phrase is initially programmed to 0xFFFF_FFFF_FFFF_FFFF, the Program Once command will be allowed to execute again on that same phrase.

13.4.5.7 Erase All Blocks Command

The Erase All Blocks operation will erase the entire P-Flash and D-Flash memory space.

Table 13-43. Erase All Blocks Command FCCOB Requirements

CCOBIX[2:0]	FCCOB Parameters	
000	0x08	Not required

Upon clearing CCIF to launch the Erase All Blocks command, the Memory Controller will erase the entire Flash memory space and verify that it is erased. If the Memory Controller verifies that the entire Flash memory space was properly erased, security will be released. During the execution of this command (CCIF=0) the user must not write to any Flash module register. The CCIF flag will set after the Erase All Blocks operation has completed.

Table 13-44. Erase All Blocks Command Error Handling

Register	Error Bit	Error Condition
FSTAT	ACCERR	Set if CCOBIX[2:0] != 000 at command launch
		Set if command not available in current mode (see Table 13-27)
	FPVIOL	Set if any area of the P-Flash or D-Flash memory is protected
	MGSTAT1	Set if any errors have been encountered during the verify operation
	MGSTAT0	Set if any non-correctable errors have been encountered during the verify operation

13.4.5.8 Erase Flash Block Command

The Erase Flash Block operation will erase all addresses in a P-Flash or D-Flash block.

Table 13-45. Erase Flash Block Command FCCOB Requirements

CCOBIX[2:0]	FCCOB Parameters	
000	0x09	Global address [17:16] to identify Flash block
001	Global address [15:0] in Flash block to be erased	

Upon clearing CCIF to launch the Erase Flash Block command, the Memory Controller will erase the selected Flash block and verify that it is erased. The CCIF flag will set after the Erase Flash Block operation has completed.

Table 13-46. Erase Flash Block Command Error Handling

Register	Error Bit	Error Condition
FSTAT	ACCERR	Set if CCOBIX[2:0] != 001 at command launch
		Set if command not available in current mode (see Table 13-27)
		Set if an invalid global address [17:16] is supplied
		Set if the supplied P-Flash address is not phrase-aligned or if the D-Flash address is not word-aligned
	FPVIOL	Set if an area of the selected Flash block is protected
	MGSTAT1	Set if any errors have been encountered during the verify operation
	MGSTAT0	Set if any non-correctable errors have been encountered during the verify operation

13.4.5.9 Erase P-Flash Sector Command

The Erase P-Flash Sector operation will erase all addresses in a P-Flash sector.

Table 13-47. Erase P-Flash Sector Command FCCOB Requirements

CCOBIX[2:0]	FCCOB Parameters	
000	0x0A	Global address [17:16] to identify P-Flash block to be erased
001	Global address [15:0] anywhere within the sector to be erased. Refer to Section 13.1.2.1 for the P-Flash sector size.	

Upon clearing CCIF to launch the Erase P-Flash Sector command, the Memory Controller will erase the selected Flash sector and then verify that it is erased. The CCIF flag will be set after the Erase P-Flash Sector operation has completed.

Table 13-48. Erase P-Flash Sector Command Error Handling

Register	Error Bit	Error Condition
FSTAT	ACCERR	Set if CCOBIX[2:0] != 001 at command launch
		Set if command not available in current mode (see Table 13-27)
		Set if an invalid global address [17:16] is supplied
		Set if a misaligned phrase address is supplied (global address [2:0] != 000)
	FPVIOL	Set if the selected P-Flash sector is protected
	MGSTAT1	Set if any errors have been encountered during the verify operation
	MGSTAT0	Set if any non-correctable errors have been encountered during the verify operation

13.4.5.10 Unsecure Flash Command

The Unsecure Flash command will erase the entire P-Flash and D-Flash memory space and, if the erase is successful, will release security.

Table 13-49. Unsecure Flash Command FCCOB Requirements

CCOBIX[2:0]	FCCOB Parameters	
000	0x0B	Not required

Upon clearing CCIF to launch the Unsecure Flash command, the Memory Controller will erase the entire P-Flash and D-Flash memory space and verify that it is erased. If the Memory Controller verifies that the entire Flash memory space was properly erased, security will be released. If the erase verify is not successful, the Unsecure Flash operation sets MGSTAT1 and terminates without changing the security state. During the execution of this command (CCIF=0) the user must not write to any Flash module register. The CCIF flag is set after the Unsecure Flash operation has completed.

Table 13-50. Unsecure Flash Command Error Handling

Register	Error Bit	Error Condition
FSTAT	ACCERR	Set if CCOBIX[2:0] != 000 at command launch
		Set if command not available in current mode (see Table 13-27)
	FPVIOL	Set if any area of the P-Flash or D-Flash memory is protected
	MGSTAT1	Set if any errors have been encountered during the verify operation
	MGSTAT0	Set if any non-correctable errors have been encountered during the verify operation

13.4.5.11 Verify Backdoor Access Key Command

The Verify Backdoor Access Key command will only execute if it is enabled by the KEYEN bits in the FSEC register (see Table 13-9). The Verify Backdoor Access Key command releases security if user-supplied keys match those stored in the Flash security bytes of the Flash configuration field (see Table 13-3). The Verify Backdoor Access Key command must not be executed from the Flash block containing the backdoor comparison key to avoid code runaway.

Table 13-51. Verify Backdoor Access Key Command FCCOB Requirements

CCOBIX[2:0]	FCCOB Parameters	
000	0x0C	Not required
001	Key 0	
010	Key 1	
011	Key 2	
100	Key 3	

Upon clearing CCIF to launch the Verify Backdoor Access Key command, the Memory Controller will check the FSEC KEYEN bits to verify that this command is enabled. If not enabled, the Memory Controller sets the ACCERR bit in the FSTAT register and terminates. If the command is enabled, the Memory Controller compares the key provided in FCCOB to the backdoor comparison key in the Flash configuration field with Key 0 compared to 0x3_FF00, etc. If the backdoor keys match, security will be released. If the backdoor keys do not match, security is not released and all future attempts to execute the Verify Backdoor Access Key command are aborted (set ACCERR) until a reset occurs. The CCIF flag is set after the Verify Backdoor Access Key operation has completed.

Table 13-52. Verify Backdoor Access Key Command Error Handling

Register	Error Bit	Error Condition
FSTAT	ACCERR	Set if CCOBIX[2:0] != 100 at command launch
		Set if an incorrect backdoor key is supplied
		Set if backdoor key access has not been enabled (KEYEN[1:0] != 10, see Section 13.3.2.2)
		Set if the backdoor key has mismatched since the last reset
	FPVIOL	None
	MGSTAT1	None
	MGSTAT0	None

13.4.5.12 Set User Margin Level Command

The Set User Margin Level command causes the Memory Controller to set the margin level for future read operations of the P-Flash or D-Flash block.

Table 13-53. Set User Margin Level Command FCCOB Requirements

CCOBIX[2:0]	FCCOB Parameters	
000	0x0D	Global address [17:16] to identify the Flash block
001	Margin level setting	

Upon clearing CCIF to launch the Set User Margin Level command, the Memory Controller will set the user margin level for the targeted block and then set the CCIF flag.

NOTE

When the D-Flash block is targeted, the D-Flash user margin levels are applied only to the D-Flash reads. However, when the P-Flash block is targeted, the P-Flash user margin levels are applied to both P-Flash and D-Flash reads. It is not possible to apply user margin levels to the P-Flash block only.

Valid margin level settings for the Set User Margin Level command are defined in Table 13-54.

Table 13-54. Valid Set User Margin Level Settings

CCOB (CCOBIX=001)	Level Description
0x0000	Return to Normal Level
0x0001	User Margin-1 Level(1)
0x0002	User Margin-0 Level(2)

1. Read margin to the erased state
2. Read margin to the programmed state

Table 13-55. Set User Margin Level Command Error Handling

Register	Error Bit	Error Condition
FSTAT	ACCERR	Set if CCOBIX[2:0] != 001 at command launch
		Set if command not available in current mode (see Table 13-27)
		Set if an invalid global address [17:16] is supplied
		Set if an invalid margin level setting is supplied
	FPVIOL	None
	MGSTAT1	None
	MGSTAT0	None

NOTE

User margin levels can be used to check that Flash memory contents have adequate margin for normal level read operations. If unexpected results are encountered when checking Flash memory contents at user margin levels, a potential loss of information has been detected.

13.4.5.13 Set Field Margin Level Command

The Set Field Margin Level command, valid in special modes only, causes the Memory Controller to set the margin level specified for future read operations of the P-Flash or D-Flash block.

Table 13-56. Set Field Margin Level Command FCCOB Requirements

CCOBIX[2:0]	FCCOB Parameters	
000	0x0E	Global address [17:16] to identify the Flash block
001	Margin level setting	

Upon clearing CCIF to launch the Set Field Margin Level command, the Memory Controller will set the field margin level for the targeted block and then set the CCIF flag.

NOTE

When the D-Flash block is targeted, the D-Flash field margin levels are applied only to the D-Flash reads. However, when the P-Flash block is targeted, the P-Flash field margin levels are applied to both P-Flash and D-Flash reads. It is not possible to apply field margin levels to the P-Flash block only.

Valid margin level settings for the Set Field Margin Level command are defined in Table 13-57.

Table 13-57. Valid Set Field Margin Level Settings

CCOB (CCOBIX=001)	Level Description
0x0000	Return to Normal Level
0x0001	User Margin-1 Level(1)
0x0002	User Margin-0 Level(2)
0x0003	Field Margin-1 Level1
0x0004	Field Margin-0 Level2

1. Read margin to the erased state
2. Read margin to the programmed state

Table 13-58. Set Field Margin Level Command Error Handling

Register	Error Bit	Error Condition
FSTAT	ACCERR	Set if CCOBIX[2:0] != 001 at command launch
		Set if command not available in current mode (see Table 13-27)
		Set if an invalid global address [17:16] is supplied
		Set if an invalid margin level setting is supplied
	FPVIOL	None
	MGSTAT1	None
	MGSTAT0	None

CAUTION

Field margin levels must only be used during verify of the initial factory programming.

NOTE

Field margin levels can be used to check that Flash memory contents have adequate margin for data retention at the normal level setting. If unexpected results are encountered when checking Flash memory contents at field margin levels, the Flash memory contents should be erased and reprogrammed.

13.4.5.14 Erase Verify D-Flash Section Command

The Erase Verify D-Flash Section command will verify that a section of code in the D-Flash is erased. The Erase Verify D-Flash Section command defines the starting point of the data to be verified and the number of words.

Table 13-59. Erase Verify D-Flash Section Command FCCOB Requirements

CCOBIX[2:0]	FCCOB Parameters	
000	0x10	Global address [17:16] to identify the D-Flash block
001	Global address [15:0] of the first word to be verified	
010	Number of words to be verified	

Upon clearing CCIF to launch the Erase Verify D-Flash Section command, the Memory Controller will verify the selected section of D-Flash memory is erased. The CCIF flag will set after the Erase Verify D-Flash Section operation has completed.

Table 13-60. Erase Verify D-Flash Section Command Error Handling

Register	Error Bit	Error Condition
FSTAT	ACCERR	Set if CCOBIX[2:0] != 010 at command launch
		Set if command not available in current mode (see Table 13-27)
		Set if an invalid global address [17:0] is supplied
		Set if a misaligned word address is supplied (global address [0] != 0)
		Set if the requested section breaches the end of the D-Flash block
	FPVIOL	None
	MGSTAT1	Set if any errors have been encountered during the read
	MGSTAT0	Set if any non-correctable errors have been encountered during the read

13.4.5.15 Program D-Flash Command

The Program D-Flash operation programs one to four previously erased words in the D-Flash block. The Program D-Flash operation will confirm that the targeted location(s) were successfully programmed upon completion.

CAUTION

A Flash word must be in the erased state before being programmed. Cumulative programming of bits within a Flash word is not allowed.

Table 13-61. Program D-Flash Command FCCOB Requirements

CCOBIX[2:0]	FCCOB Parameters	
000	0x11	Global address [17:16] to identify the D-Flash block
001	Global address [15:0] of word to be programmed	
010	Word 0 program value	
011	Word 1 program value, if desired	
100	Word 2 program value, if desired	

Table 13-61. Program D-Flash Command FCCOB Requirements

CCOBIX[2:0]	FCCOB Parameters
101	Word 3 program value, if desired

Upon clearing CCIF to launch the Program D-Flash command, the user-supplied words will be transferred to the Memory Controller and be programmed if the area is unprotected. The CCOBIX index value at Program D-Flash command launch determines how many words will be programmed in the D-Flash block. The CCIF flag is set when the operation has completed.

Table 13-62. Program D-Flash Command Error Handling

Register	Error Bit	Error Condition
FSTAT	ACCERR	Set if CCOBIX[2:0] < 010 at command launch
		Set if CCOBIX[2:0] > 101 at command launch
		Set if command not available in current mode (see Table 13-27)
		Set if an invalid global address [17:0] is supplied
		Set if a misaligned word address is supplied (global address [0] != 0)
		Set if the requested group of words breaches the end of the D-Flash block
	FPVIOL	Set if the selected area of the D-Flash memory is protected
	MGSTAT1	Set if any errors have been encountered during the verify operation
	MGSTAT0	Set if any non-correctable errors have been encountered during the verify operation

13.4.5.16 Erase D-Flash Sector Command

The Erase D-Flash Sector operation will erase all addresses in a sector of the D-Flash block.

Table 13-63. Erase D-Flash Sector Command FCCOB Requirements

CCOBIX[2:0]	FCCOB Parameters	
000	0x12	Global address [17:16] to identify D-Flash block
001	Global address [15:0] anywhere within the sector to be erased. See Section 13.1.2.2 for D-Flash sector size.	

Upon clearing CCIF to launch the Erase D-Flash Sector command, the Memory Controller will erase the selected Flash sector and verify that it is erased. The CCIF flag will set after the Erase D-Flash Sector operation has completed.

Table 13-64. Erase D-Flash Sector Command Error Handling

Register	Error Bit	Error Condition
FSTAT	ACCERR	Set if CCOBIX[2:0] != 001 at command launch
		Set if command not available in current mode (see Table 13-27)
		Set if an invalid global address [17:0] is supplied
		Set if a misaligned word address is supplied (global address [0] != 0)
	FPVIOL	Set if the selected area of the D-Flash memory is protected
	MGSTAT1	Set if any errors have been encountered during the verify operation
	MGSTAT0	Set if any non-correctable errors have been encountered during the verify operation

13.4.6 Interrupts

The Flash module can generate an interrupt when a Flash command operation has completed or when a Flash command operation has detected an ECC fault.

Table 13-65. Flash Interrupt Sources

Interrupt Source	Interrupt Flag	Local Enable	Global (CCR) Mask
Flash Command Complete	CCIF (FSTAT register)	CCIE (FCNFG register)	I Bit
ECC Double Bit Fault on Flash Read	DFDIF (FERSTAT register)	DFDIE (FERCNFG register)	I Bit
ECC Single Bit Fault on Flash Read	SFDIF (FERSTAT register)	SFDIE (FERCNFG register)	I Bit

NOTE

Vector addresses and their relative interrupt priority are determined at the MCU level.

13.4.6.1 Description of Flash Interrupt Operation

The Flash module uses the CCIF flag in combination with the CCIE interrupt enable bit to generate the Flash command interrupt request. The Flash module uses the DFDIF and SFDIF flags in combination with the DFDIE and SFDIE interrupt enable bits to generate the Flash error interrupt request. For a detailed description of the register bits involved, refer to Section 13.3.2.5, “Flash Configuration Register (FCNFG)”, Section 13.3.2.6, “Flash Error Configuration Register (FERCNFG)”, Section 13.3.2.7, “Flash Status Register (FSTAT)”, and Section 13.3.2.8, “Flash Error Status Register (FERSTAT)”.

The logic used for generating the Flash module interrupts is shown in Figure 13-27.

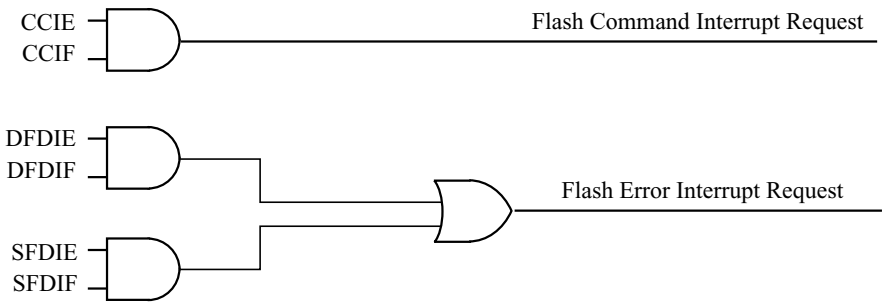

Figure 13-27. Flash Module Interrupts Implementation

13.4.7 Wait Mode

The Flash module is not affected if the MCU enters wait mode. The Flash module can recover the MCU from wait via the CCIF interrupt (see Section 13.4.6, “Interrupts”).

13.4.8 Stop Mode

If a Flash command is active (CCIF = 0) when the MCU requests stop mode, the current Flash operation will be completed before the CPU is allowed to enter stop mode.

13.5 Security

The Flash module provides security information to the MCU. The Flash security state is defined by the SEC bits of the FSEC register (see Table 13-10). During reset, the Flash module initializes the FSEC register using data read from the security byte of the Flash configuration field at global address 0x3_FF0F. The security state out of reset can be permanently changed by programming the security byte assuming that the MCU is starting from a mode where the necessary P-Flash erase and program commands are available and that the upper region of the P-Flash is unprotected. If the Flash security byte is successfully programmed, its new value will take affect after the next MCU reset.

The following subsections describe these security-related subjects:

- Unsecuring the MCU using Backdoor Key Access
- Unsecuring the MCU in Special Single Chip Mode using BDM
- Mode and Security Effects on Flash Command Availability

13.5.1 Unsecuring the MCU using Backdoor Key Access

The MCU may be unsecured by using the backdoor key access feature which requires knowledge of the contents of the backdoor keys (four 16-bit words programmed at addresses 0x3_FF00-0x3_FF07). If the KEYEN[1:0] bits are in the enabled state (see Section 13.3.2.2), the Verify Backdoor Access Key command (see Section 13.4.5.11) allows the user to present four prospective keys for comparison to the keys stored in the Flash memory via the Memory Controller. If the keys presented in the Verify Backdoor Access Key command match the backdoor keys stored in the Flash memory, the SEC bits in the FSEC

register (see Table 13-10) will be changed to unsecure the MCU. Key values of 0x0000 and 0xFFFF are not permitted as backdoor keys. While the Verify Backdoor Access Key command is active, P-Flash memory and D-Flash memory will not be available for read access and will return invalid data.

The user code stored in the P-Flash memory must have a method of receiving the backdoor keys from an external stimulus. This external stimulus would typically be through one of the on-chip serial ports.

If the KEYEN[1:0] bits are in the enabled state (see Section 13.3.2.2), the MCU can be unsecured by the backdoor key access sequence described below:

1. Follow the command sequence for the Verify Backdoor Access Key command as explained in Section 13.4.5.11
2. If the Verify Backdoor Access Key command is successful, the MCU is unsecured and the SEC[1:0] bits in the FSEC register are forced to the unsecure state of 10

The Verify Backdoor Access Key command is monitored by the Memory Controller and an illegal key will prohibit future use of the Verify Backdoor Access Key command. A reset of the MCU is the only method to re-enable the Verify Backdoor Access Key command. The security as defined in the Flash security byte (0x3_FF0F) is not changed by using the Verify Backdoor Access Key command sequence. The backdoor keys stored in addresses 0x3_FF00-0x3_FF07 are unaffected by the Verify Backdoor Access Key command sequence. The Verify Backdoor Access Key command sequence has no effect on the program and erase protections defined in the Flash protection register, FPROT.

After the backdoor keys have been correctly matched, the MCU will be unsecured. After the MCU is unsecured, the sector containing the Flash security byte can be erased and the Flash security byte can be reprogrammed to the unsecure state, if desired. In the unsecure state, the user has full control of the contents of the backdoor keys by programming addresses 0x3_FF00-0x3_FF07 in the Flash configuration field.

13.5.2 Unsecuring the MCU in Special Single Chip Mode using BDM

A secured MCU can be unsecured in special single chip mode by using the following method to erase the P-Flash and D-Flash memory:

1. Reset the MCU into special single chip mode
2. Delay while the BDM executes the Erase Verify All Blocks command write sequence to check if the P-Flash and D-Flash memories are erased
3. Send BDM commands to disable protection in the P-Flash and D-Flash memory
4. Execute the Erase All Blocks command write sequence to erase the P-Flash and D-Flash memory
5. After the CCIF flag sets to indicate that the Erase All Blocks operation has completed, reset the MCU into special single chip mode
6. Delay while the BDM executes the Erase Verify All Blocks command write sequence to verify that the P-Flash and D-Flash memory are erased

If the P-Flash and D-Flash memory are verified as erased, the MCU will be unsecured. All BDM commands will now be enabled and the Flash security byte may be programmed to the unsecure state by continuing with the following steps:

7. Send BDM commands to execute the Program P-Flash command write sequence to program the Flash security byte to the unsecured state
8. Reset the MCU

13.5.3 Mode and Security Effects on Flash Command Availability

The availability of Flash module commands depends on the MCU operating mode and security state as shown in Table 13-27.

13.6 Initialization

On each system reset the Flash module executes a reset sequence which establishes initial values for the Flash Block Configuration Parameters, the FPROT and DFPROT protection registers, and the FOPT and FSEC registers. The Flash module reverts to using built-in default values that leave the module in a fully protected and secured state if errors are encountered during execution of the reset sequence. If a double bit fault is detected during the reset sequence, both MGSTAT bits in the FSTAT register will be set.

CCIF remains clear throughout the reset sequence. The Flash module holds off all CPU access for the initial portion of the reset sequence. While Flash memory reads and access to most Flash registers are possible when the hold is removed, writes to the FCCOBIX, FCCOBHI, and FCCOBLO registers are ignored. Completion of the reset sequence is marked by setting CCIF high which enables writes to the FCCOBIX, FCCOBHI, and FCCOBLO registers to launch any available Flash command.

If a reset occurs while any Flash command is in progress, that command will be immediately aborted. The state of the word being programmed or the sector/block being erased is not guaranteed.

Chapter 14
Timer Module (TIM16B8CV2) Block Description

Table 14-1. Revision History

Revision Number	Revision Date	Sections Affected	Description of Changes
V02.04	1 Jul 2008	14.3.2.12/14-488 14.3.2.13/14-489 14.3.2.16/14-492 14.4.2/14-497 14.4.3/14-497	- Revised flag clearing procedure, whereby TEN bit must be set when clearing flags.
V02.05	9 Jul 2009	14.3.2.12/14-488 14.3.2.13/14-489 14.3.2.15/14-491 14.3.2.16/14-492 14.3.2.19/14-494 14.4.2/14-497 14.4.3/14-497	- Revised flag clearing procedure, whereby TEN or PAEN bit must be set when clearing flags. - Add fomula to describe prescaler
V02.06	26 Aug 2009	14.1.2/14-474 14.3.2.15/14-491 14.3.2.2/14-480 14.3.2.3/14-481 14.3.2.4/14-482 14.4.3/14-497	- Correct typo: TSCR ->TSCR1 - Correct reference: Figure 1-25 -> Figure 1-31 - Add description, “a counter overflow when TTOV[7] is set”, to be the condition of channel 7 override event. - Phrase the description of OC7M to make it more explicit

14.1 Introduction

The basic timer consists of a 16-bit, software-programmable counter driven by a enhanced programmable prescaler.

This timer can be used for many purposes, including input waveform measurements while simultaneously generating an output waveform. Pulse widths can vary from microseconds to many seconds.

This timer contains 8 complete input capture/output compare channels and one pulse accumulator. The input capture function is used to detect a selected transition edge and record the time. The output compare function is used for generating output signals or for timer software delays. The 16-bit pulse accumulator

is used to operate as a simple event counter or a gated time accumulator. The pulse accumulator shares timer channel 7 when in event mode.

A full access for the counter registers or the input capture/output compare registers should take place in one clock cycle. Accessing high byte and low byte separately for all of these registers may not yield the same result as accessing them in one word.

14.1.1 Features

The TIM16B8CV2 includes these distinctive features:

- Eight input capture/output compare channels.
- Clock prescaling.
- 16-bit counter.
- 16-bit pulse accumulator.

14.1.2 Modes of Operation

Stop: Timer is off because clocks are stopped.

Freeze: Timer counter keep on running, unless TSFRZ in TSCR1 (0x0006) is set to 1.

Wait: Counters keep on running, unless TSWAI in TSCR1 (0x0006) is set to 1.

Normal: Timer counter keep on running, unless TEN in TSCR1 (0x0006) is cleared to 0.

14.1.3 Block Diagrams

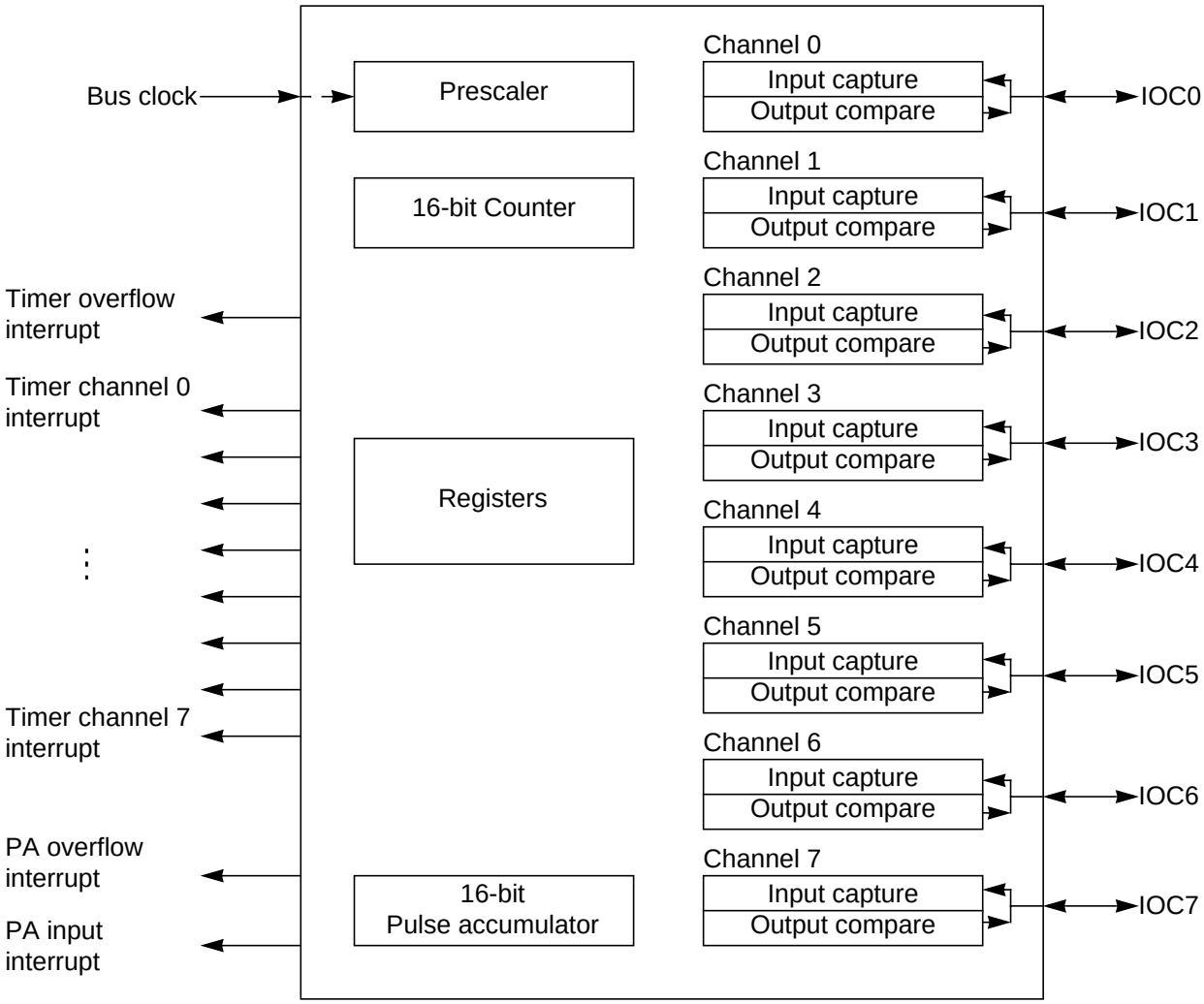

Figure 14-1. TIM16B8CV2 Block Diagram

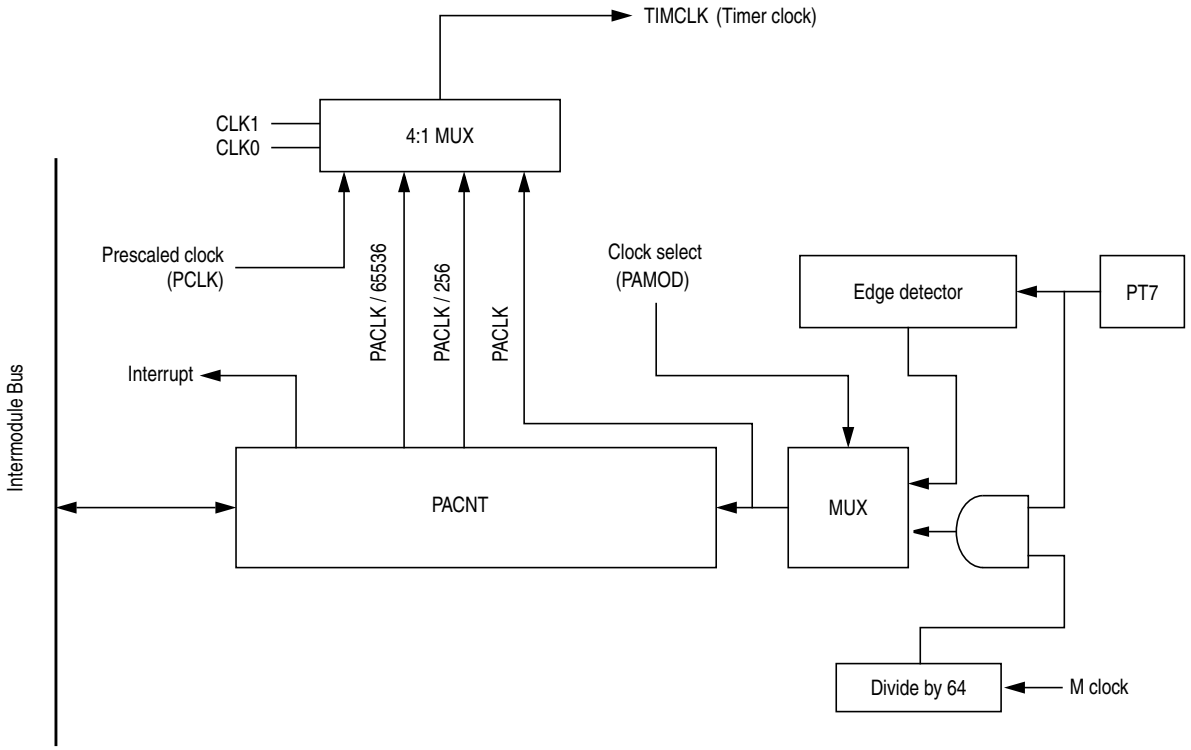

Figure 14-2. 16-Bit Pulse Accumulator Block Diagram

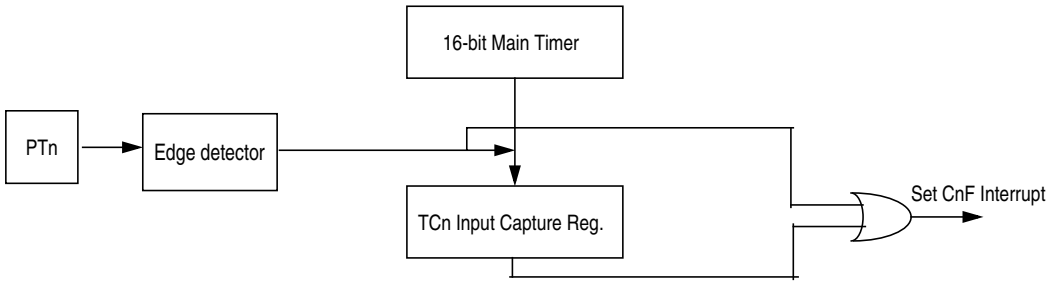

Figure 14-3. Interrupt Flag Setting

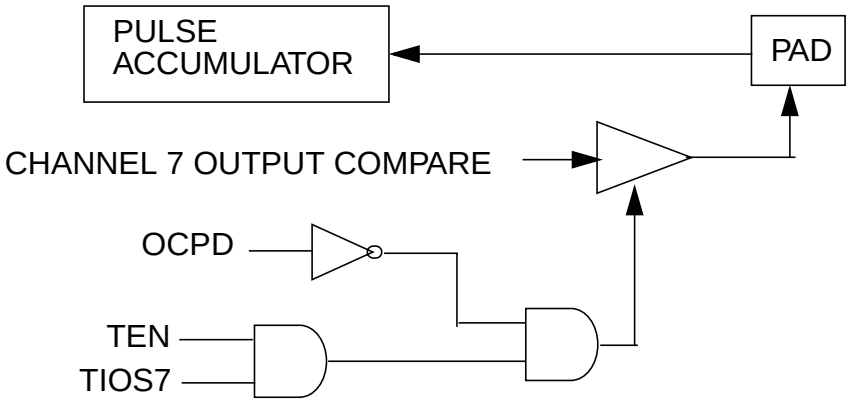

Figure 14-4. Channel 7 Output Compare/Pulse Accumulator Logic

14.2 External Signal Description

The TIM16B8CV2 module has a total of eight external pins.

14.2.1 IOC7 — Input Capture and Output Compare Channel 7 Pin

This pin serves as input capture or output compare for channel 7. This can also be configured as pulse accumulator input.

14.2.2 IOC6 — Input Capture and Output Compare Channel 6 Pin

This pin serves as input capture or output compare for channel 6.

14.2.3 IOC5 — Input Capture and Output Compare Channel 5 Pin

This pin serves as input capture or output compare for channel 5.

14.2.4 IOC4 — Input Capture and Output Compare Channel 4 Pin

This pin serves as input capture or output compare for channel 4. Pin

14.2.5 IOC3 — Input Capture and Output Compare Channel 3 Pin

This pin serves as input capture or output compare for channel 3.

14.2.6 IOC2 — Input Capture and Output Compare Channel 2 Pin

This pin serves as input capture or output compare for channel 2.

14.2.7 IOC1 — Input Capture and Output Compare Channel 1 Pin

This pin serves as input capture or output compare for channel 1.

14.2.8 IOC0 — Input Capture and Output Compare Channel 0 Pin

This pin serves as input capture or output compare for channel 0.

NOTE

For the description of interrupts see Section 14.6, “Interrupts”.

14.3 Memory Map and Register Definition

This section provides a detailed description of all memory and registers.

14.3.1 Module Memory Map

The memory map for the TIM16B8CV2 module is given below in Figure 14-5. The address listed for each register is the address offset. The total address for each register is the sum of the base address for the TIM16B8CV2 module and the address offset for each register.

14.3.2 Register Descriptions

This section consists of register descriptions in address order. Each description includes a standard register diagram with an associated figure number. Details of register bit and field function follow the register diagrams, in bit order.

Register Name		Bit 7	6	5	4	3	2	1	Bit 0
0x0000 TIOS	R	IOS7	IOS6	IOS5	IOS4	IOS3	IOS2	IOS1	IOS0
	W								
0x0001 CFORC	R	0	0	0	0	0	0	0	0
	W	FOC7	FOC6	FOC5	FOC4	FOC3	FOC2	FOC1	FOC0
0x0002 OC7M	R	OC7M7	OC7M6	OC7M5	OC7M4	OC7M3	OC7M2	OC7M1	OC7M0
	W								
0x0003 OC7D	R	OC7D7	OC7D6	OC7D5	OC7D4	OC7D3	OC7D2	OC7D1	OC7D0
	W								
0x0004 TCNTH	R	TCNT15	TCNT14	TCNT13	TCNT12	TCNT11	TCNT10	TCNT9	TCNT8
	W								
0x0005 TCNTL	R	TCNT7	TCNT6	TCNT5	TCNT4	TCNT3	TCNT2	TCNT1	TCNT0
	W								

= Unimplemented or Reserved

Figure 14-5. TIM16B8CV2 Register Summary (Sheet 1 of 3)

Register Name		Bit 7	6	5	4	3	2	1	Bit 0
0x0006 TSCR1	R	TEN	TSWAI	TSFRZ	TFFCA	PRNT	0	0	0
	W								
0x0007 TTOV	R	TOV7	TOV6	TOV5	TOV4	TOV3	TOV2	TOV1	TOV0
	W								
0x0008 TCTL1	R	OM7	OL7	OM6	OL6	OM5	OL5	OM4	OL4
	W								
0x0009 TCTL2	R	OM3	OL3	OM2	OL2	OM1	OL1	OM0	OL0
	W								
0x000A TCTL3	R	EDG7B	EDG7A	EDG6B	EDG6A	EDG5B	EDG5A	EDG4B	EDG4A
	W								
0x000B TCTL4	R	EDG3B	EDG3A	EDG2B	EDG2A	EDG1B	EDG1A	EDG0B	EDG0A
	W								
0x000C TIE	R	C7I	C6I	C5I	C4I	C3I	C2I	C1I	C0I
	W								
0x000D TSCR2	R	TOI	0	0	0	TCRE	PR2	PR1	PR0
	W								
0x000E TFLG1	R	C7F	C6F	C5F	C4F	C3F	C2F	C1F	C0F
	W								
0x000F TFLG2	R	TOF	0	0	0	0	0	0	0
	W								
0x0010–0x001F TCxH–TCxL	R	Bit 15	Bit 14	Bit 13	Bit 12	Bit 11	Bit 10	Bit 9	Bit 8
	W								
	R	Bit 7	Bit 6	Bit 5	Bit 4	Bit 3	Bit 2	Bit 1	Bit 0
	W								
0x0020 PACTL	R	0	PAEN	PAMOD	PEDGE	CLK1	CLK0	PAOVI	PAI
	W								
0x0021 PAFLG	R	0	0	0	0	0	0	PAOVF	PAIF
	W								
0x0022 PACNTH	R	PACNT15	PACNT14	PACNT13	PACNT12	PACNT11	PACNT10	PACNT9	PACNT8
	W								
0x0023 PACNTL	R	PACNT7	PACNT6	PACNT5	PACNT4	PACNT3	PACNT2	PACNT1	PACNT0
	W								
0x0024–0x002B Reserved	R								
	W								

= Unimplemented or Reserved

Figure 14-5. TIM16B8CV2 Register Summary (Sheet 2 of 3)

Register Name		Bit 7	6	5	4	3	2	1	Bit 0
0x002C OCPD	R	OCPD7	OCPD6	OCPD5	OCPD4	OCPD3	OCPD2	OCPD1	OCPD0
	W								
0x002D	R								
	W								
0x002E PTPSR	R	PTPS7	PTPS6	PTPS5	PTPS4	PTPS3	PTPS2	PTPS1	PTPS0
	W								
0x002F Reserved	R								
	W								

= Unimplemented or Reserved

Figure 14-5. TIM16B8CV2 Register Summary (Sheet 3 of 3)

14.3.2.1 Timer Input Capture/Output Compare Select (TIOS)

Module Base + 0x0000

	7	6	5	4	3	2	1	0
R	IOS7	IOS6	IOS5	IOS4	IOS3	IOS2	IOS1	IOS0
W								
Reset	0	0	0	0	0	0	0	0

Figure 14-6. Timer Input Capture/Output Compare Select (TIOS)

Read: Anytime

Write: Anytime

Table 14-2. TIOS Field Descriptions

Field	Description
7:0 IOS[7:0]	**Input Capture or Output Compare Channel Configuration** 0 The corresponding channel acts as an input capture. 1 The corresponding channel acts as an output compare.

14.3.2.2 Timer Compare Force Register (CFORC)

Module Base + 0x0001

	7	6	5	4	3	2	1	0
R	0	0	0	0	0	0	0	0
W	FOC7	FOC6	FOC5	FOC4	FOC3	FOC2	FOC1	FOC0
Reset	0	0	0	0	0	0	0	0

Figure 14-7. Timer Compare Force Register (CFORC)

Read: Anytime but will always return 0x0000 (1 state is transient)

Write: Anytime

Table 14-3. CFORC Field Descriptions

Field	Description
7:0 FOC[7:0]	**Force Output Compare Action for Channel 7:0** — A write to this register with the corresponding data bit(s) set causes the action which is programmed for output compare “x” to occur immediately. The action taken is the same as if a successful comparison had just taken place with the TCx register except the interrupt flag does not get set. **Note:** A channel 7 event, which can be a counter overflow when TTOV[7] is set or a successful output compare on channel 7, overrides any channel 6:0 compares. If forced output compare on any channel occurs at the same time as the successful output compare then forced output compare action will take precedence and interrupt flag won’t get set.

14.3.2.3 Output Compare 7 Mask Register (OC7M)

Module Base + 0x0002

	7	6	5	4	3	2	1	0
R W	OC7M7	OC7M6	OC7M5	OC7M4	OC7M3	OC7M2	OC7M1	OC7M0
Reset	0	0	0	0	0	0	0	0

Figure 14-8. Output Compare 7 Mask Register (OC7M)

Read: Anytime

Write: Anytime

Table 14-4. OC7M Field Descriptions

Field	Description
7:0 OC7M[7:0]	**Output Compare 7 Mask** — A channel 7 event, which can be a counter overflow when TTOV[7] is set or a successful output compare on channel 7, overrides any channel 6:0 compares. For each OC7M bit that is set, the output compare action reflects the corresponding OC7D bit. 0 The corresponding OC7Dx bit in the output compare 7 data register will not be transferred to the timer port on a channel 7 event, even if the corresponding pin is setup for output compare. 1 The corresponding OC7Dx bit in the output compare 7 data register will be transferred to the timer port on a channel 7 event. **Note:** The corresponding channel must also be setup for output compare (IOSx = 1 and OCPDx = 0) for data to be transferred from the output compare 7 data register to the timer port.

14.3.2.4 Output Compare 7 Data Register (OC7D)

Module Base + 0x0003

	7	6	5	4	3	2	1	0
R W	OC7D7	OC7D6	OC7D5	OC7D4	OC7D3	OC7D2	OC7D1	OC7D0
Reset	0	0	0	0	0	0	0	0

Figure 14-9. Output Compare 7 Data Register (OC7D)

Read: Anytime

Write: Anytime

Table 14-5. OC7D Field Descriptions

Field	Description
7:0 OC7D[7:0]	**Output Compare 7 Data** — A channel 7 event, which can be a counter overflow when TTOV[7] is set or a successful output compare on channel 7, can cause bits in the output compare 7 data register to transfer to the timer port data register depending on the output compare 7 mask register.

14.3.2.5 Timer Count Register (TCNT)

Module Base + 0x0004

	15	14	13	12	11	10	9	9
R W	TCNT15	TCNT14	TCNT13	TCNT12	TCNT11	TCNT10	TCNT9	TCNT8
Reset	0	0	0	0	0	0	0	0

Figure 14-10. Timer Count Register High (TCNTH)

Module Base + 0x0005

	7	6	5	4	3	2	1	0
R W	TCNT7	TCNT6	TCNT5	TCNT4	TCNT3	TCNT2	TCNT1	TCNT0
Reset	0	0	0	0	0	0	0	0

Figure 14-11. Timer Count Register Low (TCNTL)

The 16-bit main timer is an up counter.

A full access for the counter register should take place in one clock cycle. A separate read/write for high byte and low byte will give a different result than accessing them as a word.

Read: Anytime

Write: Has no meaning or effect in the normal mode; only writable in special modes (test_mode = 1).

The period of the first count after a write to the TCNT registers may be a different size because the write is not synchronized with the prescaler clock.

14.3.2.6 Timer System Control Register 1 (TSCR1)

Module Base + 0x0006

	7	6	5	4	3	2	1	0
R	TEN	TSWAI	TSFRZ	TFFCA	PRNT	0	0	0
W								
Reset	0	0	0	0	0	0	0	0

= Unimplemented or Reserved

Figure 14-12. Timer System Control Register 1 (TSCR1)

Read: Anytime

Write: Anytime

Table 14-6. TSCR1 Field Descriptions

Field	Description
7 TEN	**Timer Enable** 0 Disables the main timer, including the counter. Can be used for reducing power consumption. 1 Allows the timer to function normally. If for any reason the timer is not active, there is no ÷64 clock for the pulse accumulator because the ÷64 is generated by the timer prescaler.
6 TSWAI	**Timer Module Stops While in Wait** 0 Allows the timer module to continue running during wait. 1 Disables the timer module when the MCU is in the wait mode. Timer interrupts cannot be used to get the MCU out of wait. TSWAI also affects pulse accumulator.
5 TSFRZ	**Timer Stops While in Freeze Mode** 0 Allows the timer counter to continue running while in freeze mode. 1 Disables the timer counter whenever the MCU is in freeze mode. This is useful for emulation. TSFRZ does not stop the pulse accumulator.

Table 14-6. TSCR1 Field Descriptions (continued)

Field	Description
4 TFFCA	**Timer Fast Flag Clear All** 0 Allows the timer flag clearing to function normally. 1 For TFLG1(0x000E), a read from an input capture or a write to the output compare channel (0x0010–0x001F) causes the corresponding channel flag, CnF, to be cleared. For TFLG2 (0x000F), any access to the TCNT register (0x0004, 0x0005) clears the TOF flag. Any access to the PACNT registers (0x0022, 0x0023) clears the PAOVF and PAIF flags in the PAFLG register (0x0021). This has the advantage of eliminating software overhead in a separate clear sequence. Extra care is required to avoid accidental flag clearing due to unintended accesses.
3 PRNT	**Precision Timer** 0 Enables legacy timer. PR0, PR1, and PR2 bits of the TSCR2 register are used for timer counter prescaler selection. 1 Enables precision timer. All bits of the PTPSR register are used for Precision Timer Prescaler Selection, and all bits. This bit is writable only once out of reset.

14.3.2.7 Timer Toggle On Overflow Register 1 (TTOV)

Module Base + 0x0007

	7	6	5	4	3	2	1	0
R W	TOV7	TOV6	TOV5	TOV4	TOV3	TOV2	TOV1	TOV0
Reset	0	0	0	0	0	0	0	0

Figure 14-13. Timer Toggle On Overflow Register 1 (TTOV)

Read: Anytime

Write: Anytime

Table 14-7. TTOV Field Descriptions

Field	Description
7:0 TOV[7:0]	**Toggle On Overflow Bits** — TOVx toggles output compare pin on overflow. This feature only takes effect when in output compare mode. When set, it takes precedence over forced output compare but not channel 7 override events. 0 Toggle output compare pin on overflow feature disabled. 1 Toggle output compare pin on overflow feature enabled.

14.3.2.8 Timer Control Register 1/Timer Control Register 2 (TCTL1/TCTL2)

Module Base + 0x0008

	7	6	5	4	3	2	1	0
R W	OM7	OL7	OM6	OL6	OM5	OL5	OM4	OL4
Reset	0	0	0	0	0	0	0	0

Figure 14-14. Timer Control Register 1 (TCTL1)

Module Base + 0x0009

	7	6	5	4	3	2	1	0
R W	OM3	OL3	OM2	OL2	OM1	OL1	OM0	OL0
Reset	0	0	0	0	0	0	0	0

Figure 14-15. Timer Control Register 2 (TCTL2)

Read: Anytime

Write: Anytime

Table 14-8. TCTL1/TCTL2 Field Descriptions

Field	Description
7:0 OMx	**Output Mode** — These eight pairs of control bits are encoded to specify the output action to be taken as a result of a successful OCx compare. When either OMx or OLx is 1, the pin associated with OCx becomes an output tied to OCx. **Note:** To enable output action by OMx bits on timer port, the corresponding bit in OC7M should be cleared. For an output line to be driven by an OCx the OCPDx must be cleared.
7:0 OLx	**Output Level** — These eight pairs of control bits are encoded to specify the output action to be taken as a result of a successful OCx compare. When either OMx or OLx is 1, the pin associated with OCx becomes an output tied to OCx. **Note:** To enable output action by OLx bits on timer port, the corresponding bit in OC7M should be cleared. For an output line to be driven by an OCx the OCPDx must be cleared.

Table 14-9. Compare Result Output Action

OMx	OLx	Action
0	0	No output compare action on the timer output signal
0	1	Toggle OCx output line
1	0	Clear OCx output line to zero
1	1	Set OCx output line to one

To operate the 16-bit pulse accumulator independently of input capture or output compare 7 and 0 respectively the user must set the corresponding bits IOSx = 1, OMx = 0 and OLx = 0. OC7M7 in the OC7M register must also be cleared.

14.3.2.9 Timer Control Register 3/Timer Control Register 4 (TCTL3 and TCTL4)

Module Base + 0x000A

	7	6	5	4	3	2	1	0
R W	EDG7B	EDG7A	EDG6B	EDG6A	EDG5B	EDG5A	EDG4B	EDG4A
Reset	0	0	0	0	0	0	0	0

Figure 14-16. Timer Control Register 3 (TCTL3)

Module Base + 0x000B

	7	6	5	4	3	2	1	0
R W	EDG3B	EDG3A	EDG2B	EDG2A	EDG1B	EDG1A	EDG0B	EDG0A
Reset	0	0	0	0	0	0	0	0

Figure 14-17. Timer Control Register 4 (TCTL4)

Read: Anytime

Write: Anytime.

Table 14-10. TCTL3/TCTL4 Field Descriptions

Field	Description
7:0 EDGnB EDGnA	**Input Capture Edge Control** — These eight pairs of control bits configure the input capture edge detector circuits.

Table 14-11. Edge Detector Circuit Configuration

EDGnB	EDGnA	Configuration
0	0	Capture disabled
0	1	Capture on rising edges only
1	0	Capture on falling edges only
1	1	Capture on any edge (rising or falling)

14.3.2.10 Timer Interrupt Enable Register (TIE)

Module Base + 0x000C

	7	6	5	4	3	2	1	0
R W	C7I	C6I	C5I	C4I	C3I	C2I	C1I	C0I
Reset	0	0	0	0	0	0	0	0

Figure 14-18. Timer Interrupt Enable Register (TIE)

Read: Anytime

Write: Anytime.

Table 14-12. TIE Field Descriptions

Field	Description
7:0 C7I:C0I	**Input Capture/Output Compare "x" Interrupt Enable —** The bits in TIE correspond bit-for-bit with the bits in the TFLG1 status register. If cleared, the corresponding flag is disabled from causing a hardware interrupt. If set, the corresponding flag is enabled to cause a interrupt.

14.3.2.11 Timer System Control Register 2 (TSCR2)

Module Base + 0x000D

	7	6	5	4	3	2	1	0
R	TOI	0	0	0	TCRE	PR2	PR1	PR0
W								
Reset	0	0	0	0	0	0	0	0

= Unimplemented or Reserved

Figure 14-19. Timer System Control Register 2 (TSCR2)

Read: Anytime

Write: Anytime.

Table 14-13. TSCR2 Field Descriptions

Field	Description
7 TOI	**Timer Overflow Interrupt Enable** 0 Interrupt inhibited. 1 Hardware interrupt requested when TOF flag set.
3 TCRE	**Timer Counter Reset Enable** — This bit allows the timer counter to be reset by a successful output compare 7 event. This mode of operation is similar to an up-counting modulus counter. 0 Counter reset inhibited and counter free runs. 1 Counter reset by a successful output compare 7. If TC7 = 0x0000 and TCRE = 1, TCNT will stay at 0x0000 continuously. If TC7 = 0xFFFF and TCRE = 1, TOF will never be set when TCNT is reset from 0xFFFF to 0x0000.
2 PR[2:0]	**Timer Prescaler Select** — These three bits select the frequency of the timer prescaler clock derived from the Bus Clock as shown in Table 14-14.

Table 14-14. Timer Clock Selection

PR2	PR1	PR0	Timer Clock
0	0	0	Bus Clock / 1
0	0	1	Bus Clock / 2
0	1	0	Bus Clock / 4
0	1	1	Bus Clock / 8
1	0	0	Bus Clock / 16
1	0	1	Bus Clock / 32
1	1	0	Bus Clock / 64
1	1	1	Bus Clock / 128

NOTE

The newly selected prescale factor will not take effect until the next synchronized edge where all prescale counter stages equal zero.

14.3.2.12 Main Timer Interrupt Flag 1 (TFLG1)

Module Base + 0x000E

	7	6	5	4	3	2	1	0
R W	C7F	C6F	C5F	C4F	C3F	C2F	C1F	C0F
Reset	0	0	0	0	0	0	0	0

Figure 14-20. Main Timer Interrupt Flag 1 (TFLG1)

Read: Anytime

Write: Used in the clearing mechanism (set bits cause corresponding bits to be cleared). Writing a zero will not affect current status of the bit.

Table 14-15. TRLG1 Field Descriptions

Field	Description
7:0 C[7:0]F	**Input Capture/Output Compare Channel "x" Flag** — These flags are set when an input capture or output compare event occurs. Clearing requires writing a one to the corresponding flag bit while TEN or PAEN is set to one. When TFFCA bit in TSCR register is set, a read from an input capture or a write into an output compare channel (0x0010–0x001F) will cause the corresponding channel flag CxF to be cleared.

14.3.2.13 Main Timer Interrupt Flag 2 (TFLG2)

Module Base + 0x000F

	7	6	5	4	3	2	1	0
R	TOF	0	0	0	0	0	0	0
W								
Reset	0	0	0	0	0	0	0	0

Unimplemented or Reserved

Figure 14-21. Main Timer Interrupt Flag 2 (TFLG2)

TFLG2 indicates when interrupt conditions have occurred. To clear a bit in the flag register, write the bit to one while TEN bit of TSCR1 or PAEN bit of PACTL is set to one.

Read: Anytime

Write: Used in clearing mechanism (set bits cause corresponding bits to be cleared).

Any access to TCNT will clear TFLG2 register if the TFFCA bit in TSCR register is set.

Table 14-16. TRLG2 Field Descriptions

Field	Description
7 TOF	**Timer Overflow Flag** — Set when 16-bit free-running timer overflows from 0xFFFF to 0x0000. Clearing this bit requires writing a one to bit 7 of TFLG2 register while the TEN bit of TSCR1 or PAEN bit of PACTL is set to one (See also TCRE control bit explanation.)

14.3.2.14 Timer Input Capture/Output Compare Registers High and Low 0–7 (TCxH and TCxL)

Module Base + 0x0010 = TC0H
0x0012 = TC1H
0x0014 = TC2H
0x0016 = TC3H
0x0018 = TC4H
0x001A = TC5H
0x001C = TC6H
0x001E = TC7H

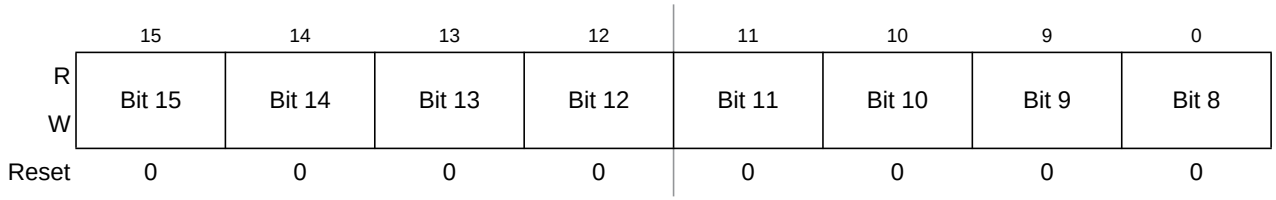

Figure 14-22. Timer Input Capture/Output Compare Register x High (TCxH)

Module Base + 0x0011 = TC0L
0x0013 = TC1L
0x0015 = TC2L
0x0017 = TC3L
0x0019 = TC4L
0x001B = TC5L
0x001D = TC6L
0x001F = TC7L

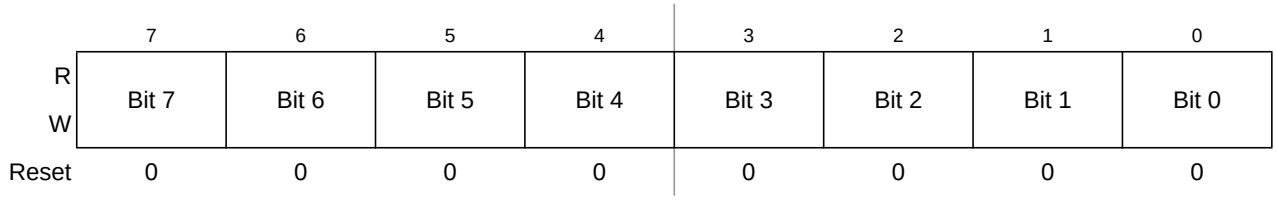

Figure 14-23. Timer Input Capture/Output Compare Register x Low (TCxL)

Depending on the TIOS bit for the corresponding channel, these registers are used to latch the value of the free-running counter when a defined transition is sensed by the corresponding input capture edge detector or to trigger an output action for output compare.

Read: Anytime

Write: Anytime for output compare function.Writes to these registers have no meaning or effect during input capture. All timer input capture/output compare registers are reset to 0x0000.

NOTE

Read/Write access in byte mode for high byte should takes place before low byte otherwise it will give a different result.

14.3.2.15 16-Bit Pulse Accumulator Control Register (PACTL)

Module Base + 0x0020

	7	6	5	4	3	2	1	0
R	0	PAEN	PAMOD	PEDGE	CLK1	CLK0	PAOVI	PAI
W								
Reset	0	0	0	0	0	0	0	0

Unimplemented or Reserved

Figure 14-24. 16-Bit Pulse Accumulator Control Register (PACTL)

When PAEN is set, the PACT is enabled.The PACT shares the input pin with IOC7.

Read: Any time

Write: Any time

Table 14-17. PACTL Field Descriptions

Field	Description
6 PAEN	**Pulse Accumulator System Enable** — PAEN is independent from TEN. With timer disabled, the pulse accumulator can function unless pulse accumulator is disabled. 0 16-Bit Pulse Accumulator system disabled. 1 Pulse Accumulator system enabled.
5 PAMOD	**Pulse Accumulator Mode** — This bit is active only when the Pulse Accumulator is enabled (PAEN = 1). See Table 14-18. 0 Event counter mode. 1 Gated time accumulation mode.
4 PEDGE	**Pulse Accumulator Edge Control** — This bit is active only when the Pulse Accumulator is enabled (PAEN = 1). For PAMOD bit = 0 (event counter mode). See Table 14-18. 0 Falling edges on IOC7 pin cause the count to be incremented. 1 Rising edges on IOC7 pin cause the count to be incremented. For PAMOD bit = 1 (gated time accumulation mode). 0 IOC7 input pin high enables M (bus clock) divided by 64 clock to Pulse Accumulator and the trailing falling edge on IOC7 sets the PAIF flag. 1 IOC7 input pin low enables M (bus clock) divided by 64 clock to Pulse Accumulator and the trailing rising edge on IOC7 sets the PAIF flag.
3:2 CLK[1:0]	**Clock Select Bits —** Refer to Table 14-19.
1 PAOVI	**Pulse Accumulator Overflow Interrupt Enable** 0 Interrupt inhibited. 1 Interrupt requested if PAOVF is set.
0 PAI	**Pulse Accumulator Input Interrupt Enable** 0 Interrupt inhibited. 1 Interrupt requested if PAIF is set.

Table 14-18. Pin Action

PAMOD	PEDGE	Pin Action
0	0	Falling edge
0	1	Rising edge
1	0	Div. by 64 clock enabled with pin high level
1	1	Div. by 64 clock enabled with pin low level

NOTE

If the timer is not active (TEN = 0 in TSCR), there is no divide-by-64 because the ÷64 clock is generated by the timer prescaler.

Table 14-19. Timer Clock Selection

CLK1	CLK0	Timer Clock
0	0	Use timer prescaler clock as timer counter clock
0	1	Use PACLK as input to timer counter clock
1	0	Use PACLK/256 as timer counter clock frequency
1	1	Use PACLK/65536 as timer counter clock frequency

For the description of PACLK please refer Figure 14-30**.**

If the pulse accumulator is disabled (PAEN = 0), the prescaler clock from the timer is always used as an input clock to the timer counter. The change from one selected clock to the other happens immediately after these bits are written.

14.3.2.16 Pulse Accumulator Flag Register (PAFLG)

Module Base + 0x0021

	7	6	5	4	3	2	1	0
R	0	0	0	0	0	0	PAOVF	PAIF
W								
Reset	0	0	0	0	0	0	0	0

Unimplemented or Reserved

Figure 14-25. Pulse Accumulator Flag Register (PAFLG)

Read: Anytime

Write: Anytime

When the TFFCA bit in the TSCR register is set, any access to the PACNT register will clear all the flags in the PAFLG register. Timer module or Pulse Accumulator must stay enabled (TEN=1 or PAEN=1) while clearing these bits.

Table 14-20. PAFLG Field Descriptions

Field	Description
1 PAOVF	**Pulse Accumulator Overflow Flag** — Set when the 16-bit pulse accumulator overflows from 0xFFFF to 0x0000. Clearing this bit requires writing a one to this bit in the PAFLG register while TEN bit of TSCR1 or PAEN bit of PACTL register is set to one.
0 PAIF	**Pulse Accumulator Input edge Flag** — Set when the selected edge is detected at the IOC7 input pin.In event mode the event edge triggers PAIF and in gated time accumulation mode the trailing edge of the gate signal at the IOC7 input pin triggers PAIF. Clearing this bit requires writing a one to this bit in the PAFLG register while TEN bit of TSCR1 or PAEN bit of PACTL register is set to one. Any access to the PACNT register will clear all the flags in this register when TFFCA bit in register TSCR(0x0006) is set.

14.3.2.17 Pulse Accumulators Count Registers (PACNT)

Module Base + 0x0022

	15	14	13	12	11	10	9	0
R W	PACNT15	PACNT14	PACNT13	PACNT12	PACNT11	PACNT10	PACNT9	PACNT8
Reset	0	0	0	0	0	0	0	0

Figure 14-26. Pulse Accumulator Count Register High (PACNTH)

Module Base + 0x0023

	7	6	5	4	3	2	1	0
R W	PACNT7	PACNT6	PACNT5	PACNT4	PACNT3	PACNT2	PACNT1	PACNT0
Reset	0	0	0	0	0	0	0	0

Figure 14-27. Pulse Accumulator Count Register Low (PACNTL)

Read: Anytime

Write: Anytime

These registers contain the number of active input edges on its input pin since the last reset.

When PACNT overflows from 0xFFFF to 0x0000, the Interrupt flag PAOVF in PAFLG (0x0021) is set.

Full count register access should take place in one clock cycle. A separate read/write for high byte and low byte will give a different result than accessing them as a word.

NOTE

Reading the pulse accumulator counter registers immediately after an active edge on the pulse accumulator input pin may miss the last count because the input has to be synchronized with the bus clock first.

14.3.2.18 Output Compare Pin Disconnect Register(OCPD)

Module Base + 0x002C

	7	6	5	4	3	2	1	0
R W	OCPD7	OCPD6	OCPD5	OCPD4	OCPD3	OCPD2	OCPD1	OCPD0
Reset	0	0	0	0	0	0	0	0

Figure 14-28. Ouput Compare Pin Disconnect Register (OCPD)

Read: Anytime

Write: Anytime

All bits reset to zero.

Table 14-21. OCPD Field Description

Field	Description
OCPD[7:0}	**Output Compare Pin Disconnect Bits** 0 Enables the timer channel port. Ouptut Compare action will occur on the channel pin. These bits do not affect the input capture or pulse accumulator functions 1 Disables the timer channel port. Output Compare action will not occur on the channel pin, but the output compare flag still become set .

14.3.2.19 Precision Timer Prescaler Select Register (PTPSR)

Module Base + 0x002E

	7	6	5	4	3	2	1	0
R W	PTPS7	PTPS6	PTPS5	PTPS4	PTPS3	PTPS2	PTPS1	PTPS0
Reset	0	0	0	0	0	0	0	0

Figure 14-29. Precision Timer Prescaler Select Register (PTPSR)

Read: Anytime

Write: Anytime

All bits reset to zero.

Table 14-22. PTPSR Field Descriptions

Field	Description
7:0 PTPS[7:0]	**Precision Timer Prescaler Select Bits** — These eight bits specify the division rate of the main Timer prescaler. These are effective only when the PRNT bit of TSCR1 is set to 1. Table 14-23 shows some selection examples in this case. The newly selected prescale factor will not take effect until the next synchronized edge where all prescale counter stages equal zero.

The Prescaler can be calculated as follows depending on logical value of the PTPS[7:0] and PRNT bit:

PRNT = 1 : Prescaler = PTPS[7:0] + 1

Table 14-23. Precision Timer Prescaler Selection Examples when PRNT = 1

PTPS7	PTPS6	PTPS5	PTPS4	PTPS3	PTPS2	PTPS1	PTPS0	Prescale Factor
0	0	0	0	0	0	0	0	1
0	0	0	0	0	0	0	1	2
0	0	0	0	0	0	1	0	3
0	0	0	0	0	0	1	1	4
0	0	0	0	0	1	0	0	5
0	0	0	0	0	1	0	1	6
0	0	0	0	0	1	1	0	7
0	0	0	0	0	1	1	1	8
0	0	0	0	1	1	1	1	16
0	0	0	1	1	1	1	1	32
0	0	1	1	1	1	1	1	64
0	1	1	1	1	1	1	1	128
1	1	1	1	1	1	1	1	256

14.4 Functional Description

This section provides a complete functional description of the timer TIM16B8CV2 block. Please refer to the detailed timer block diagram in Figure 14-30 as necessary.

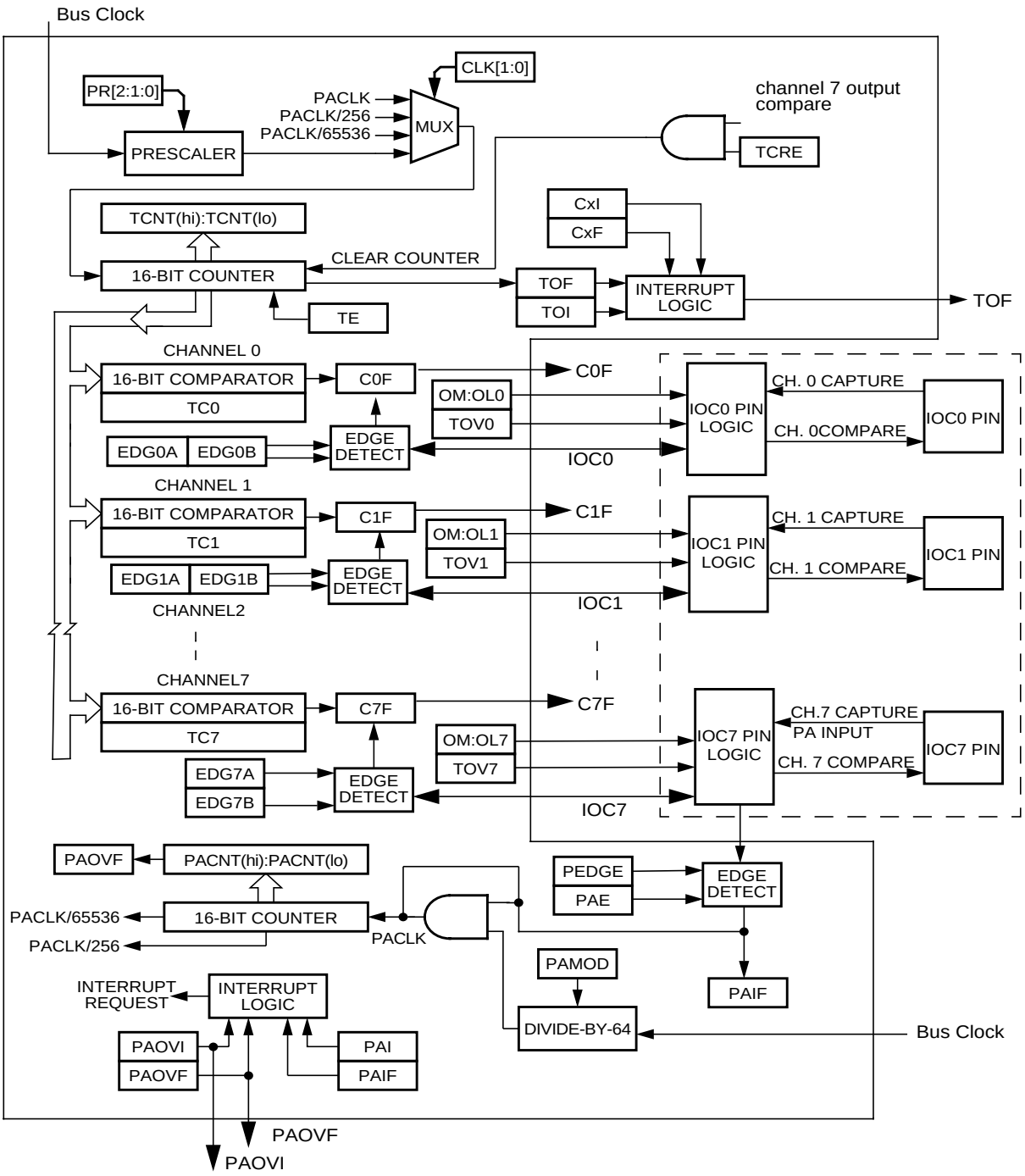

Figure 14-30. Detailed Timer Block Diagram

14.4.1 Prescaler

The prescaler divides the bus clock by 1,2,4,8,16,32,64 or 128. The prescaler select bits, PR[2:0], select the prescaler divisor. PR[2:0] are in timer system control register 2 (TSCR2).

The prescaler divides the bus clock by a prescalar value. Prescaler select bits PR[2:0] of in timer system control register 2 (TSCR2) are set to define a prescalar value that generates a divide by 1, 2, 4, 8, 16, 32, 64 and 128 when the PRNT bit in TSCR1 is disabled.

By enabling the PRNT bit of the TSCR1 register, the performance of the timer can be enhanced. In this case, it is possible to set additional prescaler settings for the main timer counter in the present timer by using PTPSR[7:0] bits of PTPSR register.

14.4.2 Input Capture

Clearing the I/O (input/output) select bit, IOSx, configures channel x as an input capture channel. The input capture function captures the time at which an external event occurs. When an active edge occurs on the pin of an input capture channel, the timer transfers the value in the timer counter into the timer channel registers, TCx.

The minimum pulse width for the input capture input is greater than two bus clocks.

An input capture on channel x sets the CxF flag. The CxI bit enables the CxF flag to generate interrupt requests. Timer module or Pulse Accumulator must stay enabled (TEN bit of TSCR1 or PAEN bit of PACTL regsiter must be set to one) while clearing CxF (writing one to CxF).

14.4.3 Output Compare

Setting the I/O select bit, IOSx, configures channel x as an output compare channel. The output compare function can generate a periodic pulse with a programmable polarity, duration, and frequency. When the timer counter reaches the value in the channel registers of an output compare channel, the timer can set, clear, or toggle the channel pin if the corresponding OCPDx bit is set to zero. An output compare on channel x sets the CxF flag. The CxI bit enables the CxF flag to generate interrupt requests. Timer module or Pulse Accumulator must stay enabled (TEN bit of TSCR1 or PAEN bit of PACTL regsiter must be set to one) while clearing CxF (writing one to CxF).

The output mode and level bits, OMx and OLx, select set, clear, toggle on output compare. Clearing both OMx and OLx results in no output compare action on the output compare channel pin.

Setting a force output compare bit, FOCx, causes an output compare on channel x. A forced output compare does not set the channel flag.

A channel 7 event, which can be a counter overflow when TTOV[7] is set or a successful output compare on channel 7, overrides output compares on all other output compare channels. The output compare 7 mask register masks the bits in the output compare 7 data register. The timer counter reset enable bit, TCRE, enables channel 7 output compares to reset the timer counter. A channel 7 output compare can reset the timer counter even if the IOC7 pin is being used as the pulse accumulator input.

Writing to the timer port bit of an output compare pin does not affect the pin state. The value written is stored in an internal latch. When the pin becomes available for general-purpose output, the last value written to the bit appears at the pin.

14.4.3.1 OC Channel Initialization

Internal register whose output drives OCx can be programmed before timer drives OCx. The desired state can be programmed to this Internal register by writing a one to CFORCx bit with TIOSx, OCPDx and TEN bits set to one. Setting OCPDx to zero allows Interal register to drive the programmed state to OCx. This allows a glitch free switch over of port from general purpose I/O to timer output once the OCPDx bit is set to zero.

14.4.4 Pulse Accumulator

The pulse accumulator (PACNT) is a 16-bit counter that can operate in two modes:

Event counter mode — Counting edges of selected polarity on the pulse accumulator input pin, PAI.

Gated time accumulation mode — Counting pulses from a divide-by-64 clock. The PAMOD bit selects the mode of operation.

The minimum pulse width for the PAI input is greater than two bus clocks.

14.4.5 Event Counter Mode

Clearing the PAMOD bit configures the PACNT for event counter operation. An active edge on the IOC7 pin increments the pulse accumulator counter. The PEDGE bit selects falling edges or rising edges to increment the count.

NOTE

The PACNT input and timer channel 7 use the same pin IOC7. To use the IOC7, disconnect it from the output logic by clearing the channel 7 output mode and output level bits, OM7 and OL7. Also clear the channel 7 output compare 7 mask bit, OC7M7.

The Pulse Accumulator counter register reflect the number of active input edges on the PACNT input pin since the last reset.

The PAOVF bit is set when the accumulator rolls over from 0xFFFF to 0x0000. The pulse accumulator overflow interrupt enable bit, PAOVI, enables the PAOVF flag to generate interrupt requests.

NOTE

The pulse accumulator counter can operate in event counter mode even when the timer enable bit, TEN, is clear.

14.4.6 Gated Time Accumulation Mode

Setting the PAMOD bit configures the pulse accumulator for gated time accumulation operation. An active level on the PACNT input pin enables a divided-by-64 clock to drive the pulse accumulator. The PEDGE bit selects low levels or high levels to enable the divided-by-64 clock.

The trailing edge of the active level at the IOC7 pin sets the PAIF. The PAI bit enables the PAIF flag to generate interrupt requests.

The pulse accumulator counter register reflect the number of pulses from the divided-by-64 clock since the last reset.

NOTE

The timer prescaler generates the divided-by-64 clock. If the timer is not active, there is no divided-by-64 clock.

14.5 Resets

The reset state of each individual bit is listed within Section 14.3, “Memory Map and Register Definition” which details the registers and their bit fields.

14.6 Interrupts

This section describes interrupts originated by the TIM16B8CV2 block. Table 14-24 lists the interrupts generated by the TIM16B8CV2 to communicate with the MCU.

Table 14-24. TIM16B8CV1 Interrupts

Interrupt	Offset (1)	Vector[1]	Priority[1]	Source	Description
C[7:0]F	—	—	—	Timer Channel 7–0	Active high timer channel interrupts 7–0
PAOVI	—	—	—	Pulse Accumulator Input	Active high pulse accumulator input interrupt
PAOVF	—	—	—	Pulse Accumulator Overflow	Pulse accumulator overflow interrupt
TOF	—	—	—	Timer Overflow	Timer Overflow interrupt

1. Chip Dependent.

The TIM16B8CV2 uses a total of 11 interrupt vectors. The interrupt vector offsets and interrupt numbers are chip dependent.

14.6.1 Channel [7:0] Interrupt (C[7:0]F)

This active high outputs will be asserted by the module to request a timer channel 7 – 0 interrupt to be serviced by the system controller.

14.6.2 Pulse Accumulator Input Interrupt (PAOVI)

This active high output will be asserted by the module to request a timer pulse accumulator input interrupt to be serviced by the system controller.

14.6.3 Pulse Accumulator Overflow Interrupt (PAOVF)

This active high output will be asserted by the module to request a timer pulse accumulator overflow interrupt to be serviced by the system controller.

14.6.4 Timer Overflow Interrupt (TOF)

This active high output will be asserted by the module to request a timer overflow interrupt to be serviced by the system controller.

Appendix A
Electrical Characteristics

A.1 General

This supplement contains the most accurate electrical information for the MC9S12P-Family microcontroller available at the time of publication.

This introduction is intended to give an overview on several common topics like power supply, current injection etc.

A.1.1 Parameter Classification

The electrical parameters shown in this supplement are guaranteed by various methods. To give the customer a better understanding the following classification is used and the parameters are tagged accordingly in the tables where appropriate.

NOTE

This classification is shown in the column labeled “C” in the parameter tables where appropriate.

P: Those parameters are guaranteed during production testing on each individual device.

C: Those parameters are achieved by the design characterization by measuring a statistically relevant sample size across process variations.

T: Those parameters are achieved by design characterization on a small sample size from typical devices under typical conditions unless otherwise noted. All values shown in the typical column are within this category.

D: Those parameters are derived mainly from simulations.

A.1.2 Power Supply

The VDDA, VSSA pin pairs supply the A/D converter and parts of the internal voltage regulator.

The VDDX, VSSX pin pairs [2:1] supply the I/O pins.

VDDR supplies the internal voltage regulator.

All VDDX pins are internally connected by metal.

All VSSX pins are internally connected by metal.

VDDA, VDDX and VSSA, VSSX are connected by diodes for ESD protection.

NOTE

In the following context V_{DD35} is used for either VDDA, VDDR, and VDDX; V_{SS35} is used for either VSSA and VSSX unless otherwise noted.

I_{DD35} denotes the sum of the currents flowing into the VDDA, VDDX and VDDR pins.

A.1.3 Pins

There are four groups of functional pins.

A.1.3.1 I/O Pins

The I/O pins have a level in the range of 3.15V to 5.5V. This class of pins is comprised of all port I/O pins, the analog inputs, BKGD and the $\overline{\text{RESET}}$ pins. Some functionality may be disabled.

A.1.3.2 Analog Reference

This group is made up by the VRH and VRL pins.

A.1.3.3 Oscillator

The pins EXTAL, XTAL dedicated to the oscillator have a nominal 1.8V level.

A.1.3.4 TEST

This pin is used for production testing only. The TEST pin must be tied to ground in all applications.

A.1.4 Current Injection

Power supply must maintain regulation within operating V_{DD35} or V_{DD} range during instantaneous and operating maximum current conditions. If positive injection current ($V_{in} > V_{DD35}$) is greater than I_{DD35}, the injection current may flow out of V_{DD35} and could result in external power supply going out of regulation. Ensure external V_{DD35} load will shunt current greater than maximum injection current. This will be the greatest risk when the MCU is not consuming power; e.g., if no system clock is present, or if clock rate is very low which would reduce overall power consumption.

A.1.5 Absolute Maximum Ratings

Absolute maximum ratings are stress ratings only. A functional operation under or outside those maxima is not guaranteed. Stress beyond those limits may affect the reliability or cause permanent damage of the device.

This device contains circuitry protecting against damage due to high static voltage or electrical fields; however, it is advised that normal precautions be taken to avoid application of any voltages higher than maximum-rated voltages to this high-impedance circuit. Reliability of operation is enhanced if unused inputs are tied to an appropriate logic voltage level (e.g., either V_{SS35} or V_{DD35}).

Table A-1. Absolute Maximum Ratings[1]

Num	Rating	Symbol	Min	Max	Unit
1	I/O, regulator and analog supply voltage	V_{DD35}	–0.3	6.0	V
2	Voltage difference V_{DDX} to V_{DDA}	Δ_{VDDX}	–6.0	0.3	V
3	Voltage difference V_{SSX} to V_{SSA}	Δ_{VSSX}	–0.3	0.3	V
4	Digital I/O input voltage	V_{IN}	–0.3	6.0	V
5	Analog reference	V_{RH}, V_{RL}	–0.3	6.0	V
6	EXTAL, XTAL	V_{ILV}	–0.3	2.16	V
7	Instantaneous maximum current Single pin limit for all digital I/O pins[2]	I_D	–25	+25	mA
8	Instantaneous maximum current Single pin limit for EXTAL, XTAL	I_{DL}	–25	+25	mA
9	Storage temperature range	T_{stg}	–65	155	°C

1. Beyond absolute maximum ratings device might be damaged.
2. All digital I/O pins are internally clamped to V_{SSX} and V_{DDX}, or V_{SSA} and V_{DDA}.

A.1.6 ESD Protection and Latch-up Immunity

All ESD testing is in conformity with CDF-AEC-Q100 stress test qualification for automotive grade integrated circuits. During the device qualification ESD stresses were performed for the Human Body Model (HBM) and the Charge Device Model.

A device will be defined as a failure if after exposure to ESD pulses the device no longer meets the device specification. Complete DC parametric and functional testing is performed per the applicable device specification at room temperature followed by hot temperature, unless specified otherwise in the device specification.

Table A-2. ESD and Latch-up Test Conditions

Model	Description	Symbol	Value	Unit
Human Body	Series resistance	R1	1500	Ohm
	Storage capacitance	C	100	pF
	Number of pulse per pin Positive Negative	 — —	 3 3	
Latch-up	Minimum input voltage limit	—	–2.5	V
	Maximum input voltage limit	—	7.5	V

Table A-3. ESD and Latch-Up Protection Characteristics

Num	C	Rating	Symbol	Min	Max	Unit
1	C	Human Body Model (HBM)	V_{HBM}	2000	—	V
2	C	Charge Device Model (CDM)	V_{CDM}	500	—	V
3	C	Latch-up current at T_A = 125°C Positive Negative	I_{LAT}	 +100 –100	 — —	mA
4	C	Latch-up current at T_A = 27°C Positive Negative	I_{LAT}	 +200 –200	 — —	mA

A.1.7 Operating Conditions

This section describes the operating conditions of the device. Unless otherwise noted those conditions apply to all the following data.

NOTE

Please refer to the temperature rating of the device (C, V, M) with regards to the ambient temperature T_A and the junction temperature T_J. For power dissipation calculations refer to Section A.1.8, “Power Dissipation and Thermal Characteristics”.

Table A-4. Operating Conditions

Rating	Symbol	Min	Typ	Max	Unit
I/O, regulator and analog supply voltage	V_{DD35}	3.13	5	5.5	V
Voltage difference V_{DDX} to V_{DDA}	Δ_{VDDX}	refer to Table A-14			
Voltage difference V_{DDR} to V_{DDX}	Δ_{VDDR}	-0.1	0	0.1	V
Voltage difference V_{SSX} to V_{SSA}	Δ_{VSSX}	refer to Table A-14			
Voltage difference V_{SS3} , V_{SSPLL} to V_{SSX}	Δ_{VSS}	-0.1	0	0.1	V
Digital logic supply voltage	V_{DD}	1.72	1.8	1.98	V

Table A-4. Operating Conditions

Oscillator	f_{osc}	4	—	16	MHz
Bus frequency	f_{bus}	0.5	—	32	MHz
Temperature Option C Operating junction temperature range Operating ambient temperature range(1)	 T_J T_A	 –40 –40	 — 27	 105 85	°C
Temperature Option V Operating junction temperature range Operating ambient temperature range1	 T_J T_A	 –40 –40	 — 27	 125 105	°C
Temperature Option M Operating junction temperature range Operating ambient temperature range1	 T_J T_A	 –40 –40	 — 27	 150 125	°C

1. Please refer to Section A.1.8, "Power Dissipation and Thermal Characteristics" for more details about the relation between ambient temperature T_A and device junction temperature T_J.

NOTE

Operation is guaranteed when powering down until low voltage reset assertion.

A.1.8 Power Dissipation and Thermal Characteristics

Power dissipation and thermal characteristics are closely related. The user must assure that the maximum operating junction temperature is not exceeded. The average chip-junction temperature (T_J) in °C can be obtained from:

$$T_J = T_A + (P_D \bullet \Theta_{JA})$$

T_J = Junction Temperature, [°C]

T_A = Ambient Temperature, [°C]

P_D = Total Chip Power Dissipation, [W]

Θ_{JA} = Package Thermal Resistance, [°C/W]

The total power dissipation can be calculated from:

$$P_D = P_{INT} + P_{IO}$$

P_{INT} = Chip Internal Power Dissipation, [W]

$$P_{IO} = \sum_i R_{DSON} \cdot I_{IO_i}^2$$

P_{IO} is the sum of all output currents on I/O ports associated with V_{DDX}, whereby

$$R_{DSON} = \frac{V_{OL}}{I_{OL}}; \text{for outputs driven low}$$

$$R_{DSON} = \frac{V_{DD35} - V_{OH}}{I_{OH}}; \text{for outputs driven high}$$

$$P_{INT} = I_{DDR} \cdot V_{DDR} + I_{DDA} \cdot V_{DDA}$$

Table A-5. Thermal Package Characteristics(1)

Num	C	Rating	Symbol	Min	Typ	Max	Unit
QFN 48							
1	D	Thermal resistance QFN 48, single sided PCB(2)	θ_{JA}	—	—	82	°C/W
2	D	Thermal resistance QFN 48, double sided PCB with 2 internal planes(3)	θ_{JA}	—	—	28	°C/W
3	D	Junction to Board QFN 48	θ_{JB}	—	—	11	°C/W
4	D	Junction to Case QFN 48[4]	θ_{JC}	—	—	1.4	°C/W
5	D	Junction to Case (Bottom) QFN 48[5]	Ψ_{JT}	—	—	4	°C/W
QFP 80							
6	D	Thermal resistance QFP 80, single sided PCB[2]	θ_{JA}	—	—	56	°C/W
7	D	Thermal resistance QFP 80, double sided PCB with 2 internal planes[3]	θ_{JA}	—	—	43	°C/W
8	D	Junction to Board QFP 80	θ_{JB}	—	—	28	°C/W
9	D	Junction to Case QFP 80(4)	θ_{JC}	—	—	19	°C/W
10	D	Junction to Package Top QFP 80(5)	Ψ_{JT}	—	—	5	°C/W
LQFP 64							
11	D	Thermal resistance LQFP 64, single sided PCB[2]	θ_{JA}	—	—	70	°C/W
12	D	Thermal resistance LQFP 64, double sided PCB with 2 internal planes[3]	θ_{JA}	—	—	52	°C/W
13	D	Junction to Board LQFP 64	θ_{JB}	—	—	35	°C/W
14	D	Junction to Case LQFP 64(6)	θ_{JC}	—	—	17	°C/W
15	D	Junction to Package Top LQFP 64(7)	Ψ_{JT}	—	—	3	°C/W

1. The values for thermal resistance are achieved by package simulations
2. Junction to ambient thermal resistance, θ_{JA} was simulated to be equivalent to the JEDEC specification JESD51-2 in a horizontal configuration in natural convection.
3. Junction to ambient thermal resistance, θ_{JA} was simulated to be equivalent to the JEDEC specification JESD51-7 in a horizontal configuration in natural convection.

4. Junction to case thermal resistance was simulated to be equivalent to the measured values using the cold plate technique with the cold plate temperature used as the “case” temperature. This basic cold plate measurement technique is described by MIL-STD 883D, Method 1012.1. This is the correct thermal metric to use to calculate thermal performance when the package is being used with a heat sink.
5. Thermal characterization parameter Ψ_{JT} is the “resistance” from junction to reference point thermocouple on top center of the case as defined in JESD51-2. Ψ_{JT} is a useful value to use to estimate junction temperature in a steady state customer enviroment.
6. Junction to case thermal resistance was simulated to be equivalent to the measured values using the cold plate technique with the cold plate temperature used as the “case” temperature. This basic cold plate measurement technique is described by MIL-STD 883D, Method 1012.1. This is the correct thermal metric to use to calculate thermal performance when the package is being used with a heat sink.
7. Thermal characterization parameter Ψ_{JT} is the “resistance” from junction to reference point thermocouple on top center of the case as defined in JESD51-2. Ψ_{JT} is a useful value to use to estimate junction temperature in a steady state customer enviroment.

A.1.9 I/O Characteristics

This section describes the characteristics of all I/O pins except EXTAL, XTAL, TEST and supply pins.

Table A-6. 3.3-V I/O Characteristics
ALL 3.3V RANGE I/O PARAMETERS ARE SUBJECT TO CHANGE FOLLOWING CHARACTERIZATION

Conditions are 3.15 V < V_{DD35} < 3.6 V junction temperature from –40°C to +150°C, unless otherwise noted
I/O Characteristics for all I/O pins except EXTAL, XTAL,TEST and supply pins.

Num	C	Rating	Symbol	Min	Typ	Max	Unit
1	P	Input high voltage	V_{IH}	0.65*V_{DD35}	—	—	V
	T	Input high voltage	V_{IH}	—	—	V_{DD35} + 0.3	V
2	P	Input low voltage	V_{IL}	—	—	0.35*V_{DD35}	V
	T	Input low voltage	V_{IL}	V_{SS35} – 0.3	—	—	V
3	C	Input hysteresis	V_{HYS}		250		mV
4	 P C C	Input leakage current (pins in high impedance input mode)(1) V_{in} = V_{DD35} or V_{SS35} **M** temperature range –40°C to +150°C **V** temperature range –40°C to +125°C **C** temperature range –40°C to +105°C	I_{in}	 –1.00 -0.75 -0.50	 — — —	 1.00 0.75 0.50	µA
5	C	Output high voltage (pins in output mode) Partial drive I_{OH} = –0.75 mA	V_{OH}	V_{DD35} – 0.4	—	—	V
6	P	Output high voltage (pins in output mode) Full drive I_{OH} = –4 mA	V_{OH}	V_{DD35} – 0.4	—	—	V
7	C	Output low voltage (pins in output mode) Partial Drive I_{OL} = +0.9 mA	V_{OL}	—	—	0.4	V
8	P	Output low voltage (pins in output mode) Full Drive I_{OL} = +4.75 mA	V_{OL}	—	—	0.4	V
9	P	Internal pull up resistance V_{IH} min > input voltage > V_{IL} max	R_{PUL}	25	—	50	KΩ
10	P	Internal pull down resistance V_{IH} min > input voltage > V_{IL} max	R_{PDH}	25	—	50	KΩ
11	D	Input capacitance	C_{in}	—	6	—	pF
12	T	Injection current(2) Single pin limit Total device limit, sum of all injected currents	 I_{ICS} I_{ICP}	 –2.5 –25	—	 2.5 25	mA
13	P	Port J, P interrupt input pulse filtered (STOP)(3)	t_{PULSE}	—	—	3	µs
14	P	Port J, P interrupt input pulse passed (STOP)3	t_{PULSE}	10	—	—	µs
15	D	Port J, P interrupt input pulse filtered ($\overline{\text{STOP}}$)	t_{PULSE}	—	—	3	tcyc
16	D	Port J, P interrupt input pulse passed ($\overline{\text{STOP}}$)	t_{PULSE}	4	—	—	tcyc
17	D	$\overline{\text{IRQ}}$ pulse width, edge-sensitive mode ($\overline{\text{STOP}}$)	PW_{IRQ}	1	—	—	tcyc

1. Maximum leakage current occurs at maximum operating temperature. Current decreases by approximately one-half for each 8°C to 12 C° in the temperature range from 50°C to 125°C.
2. Refer to Section A.1.4, “Current Injection” for more details
3. Parameter only applies in stop or pseudo stop mode.

Table A-7. 5-V I/O Characteristics

Conditions are 4.5 V < V_{DD35} < 5.5 V junction temperature from –40°C to +150°C, unless otherwise noted I/O Characteristics for all I/O pins except EXTAL, XTAL,TEST and supply pins.							
Num	**C**	**Rating**	**Symbol**	**Min**	**Typ**	**Max**	**Unit**
1	P	Input high voltage	V_{IH}	0.65*V_{DD35}	—	—	V
	T	Input high voltage	V_{IH}	—	—	V_{DD35} + 0.3	V
2	P	Input low voltage	V_{IL}	—	—	0.35*V_{DD35}	V
	T	Input low voltage	V_{IL}	V_{SS35} – 0.3	—	—	V
3	C	Input hysteresis	V_{HYS}		250	—	mV
4	 P C C	Input leakage current (pins in high impedance input mode)[1] V_{in} = V_{DD35} or V_{SS35} **M** temperature range –40°C to +150°C **V** temperature range –40°C to +125°C **C** temperature range –40°C to +105°C	I_{in}	 –1.00 -0.75 -0.50	 — — —	 1.00 0.75 0.50	µA
5	C	Output high voltage (pins in output mode) Partial drive I_{OH} = –2 mA	V_{OH}	V_{DD35} – 0.8	—	—	V
6	P	Output high voltage (pins in output mode) Full drive I_{OH} = –10 mA	V_{OH}	V_{DD35} – 0.8	—	—	V
7	C	Output low voltage (pins in output mode) Partial drive I_{OL} = +2 mA	V_{OL}	—	—	0.8	V
8	P	Output low voltage (pins in output mode) Full drive I_{OL} = +10 mA	V_{OL}	—	—	0.8	V
9	P	Internal pull up resistance V_{IH} min > input voltage > V_{IL} max	R_{PUL}	25	—	50	KΩ
10	P	Internal pull down resistance V_{IH} min > input voltage > V_{IL} max	R_{PDH}	25	—	50	KΩ
11	D	Input capacitance	C_{in}	—	6	—	pF
12	T	Injection current[2] Single pin limit Total device Limit, sum of all injected currents	 I_{ICS} I_{ICP}	 –2.5 –25	—	 2.5 25	mA
13	P	Port J, P interrupt input pulse filtered (STOP)[3]	t_{PULSE}	—	—	3	µs
14	P	Port J, P interrupt input pulse passed (STOP)[3]	t_{PULSE}	10	—	—	µs
15	D	Port J, P interrupt input pulse filtered ($\overline{\text{STOP}}$)	t_{PULSE}	—	—	3	tcyc
16	D	Port J, P interrupt input pulse passed ($\overline{\text{STOP}}$)	t_{PULSE}	4	—	—	tcyc
17	D	$\overline{\text{IRQ}}$ pulse width, edge-sensitive mode ($\overline{\text{STOP}}$)	PW_{IRQ}	1	—	—	tcyc

1. Maximum leakage current occurs at maximum operating temperature. Current decreases by approximately one-half for each 8°C to 12 C° in the temperature range from 50°C to 125°C.
2. Refer to Section A.1.4, “Current Injection” for more details
3. Parameter only applies in stop or pseudo stop mode.

A.1.10 Supply Currents

This section describes the current consumption characteristics of the device as well as the conditions for the measurements.

A.1.10.1 Measurement Conditions

Run current is measured on VDDR pin. It does not include the current to drive external loads. Unless otherwise noted the currents are measured in special single chip mode and the CPU code is executed from RAM. For Run and Wait current measurements PLL is on and the reference clock is the IRC1M trimmed to 1MHz. The bus frequency is 32MHz and the CPU frequency is 64MHz. Table A-8., Table A-9. and Table A-10. show the configuration of the CPMU module and the peripherals for Run, Wait and Stop current measurement.

Table A-8. CPMU Configuration for Pseudo Stop Current Measurement

CPMU REGISTER	Bit settings/Conditions
CPMUCLKS	PLLSEL=0, PSTP=1, PRE=PCE=RTIOSCSEL=COPOSCSEL=1
CPMUOSC	OSCE=1, External Square wave on EXTAL f_{EXTAL}=16MHz, V_{IH}= 1.8V, V_{IL}=0V
CPMURTI	RTDEC=0, RTR[6:4]=111, RTR[3:0]=1111;
CPMUCOP	WCOP=1, CR[2:0]=111

Table A-9. CPUM Configuration for Run/Wait and Full Stop Current Measurement

CPMU REGISTER	Bit settings/Conditions
CPMUSYNR	VCOFRQ[1:0]=01,SYNDIV[5:0] = 32
CPMUPOSTDIV	POSTDIV[4:0]=0,
CPMUCLKS	PLLSEL=1
CPMUOSC	OSCE=0, Reference clock for PLL is f_{ref}=f_{irc1m} trimmed to 1MHz
API settings for STOP current measurement	
CPMUAPICTL	APIEA=0, APIFE=1, APIE=0
CPMUAPITR	trimmed to 10Khz
CPMUAPIRH/RL	set to $FFFF

Table A-10. Peripheral Configurations for Run & Wait Current Measurement

Peripheral	Configuration
MSCAN	configured to loop-back mode using a bit rate of 1Mbit/s
SPI	configured to master mode, continously transmit data (0x55 or 0xAA) at 1Mbit/s
SCI	configured into loop mode, continously transmit data (0x55) at speed of 57600 baud
PWM	configured to toggle its pins at the rate of 40kHz
ATD	the peripheral is configured to operate at its maximum specified frequency and to continuously convert voltages on all input channels in sequence.
DBG	the module is enabled and the comparators are configured to trigger in outside range.The range covers all the code executed by the core.
TIM	the peripheral shall be configured to output compare mode, pulse accumulator and modulus counter enabled.
COP & RTI	enabled

Table A-11. Run and Wait Current Characteristics

Conditions are: V_{DDR}=5.5V, T_A=125°C, see Table A-9. and Table A-10.							
Num	**C**	**Rating**	**Symbol**	**Min**	**Typ**	**Max**	**Unit**
1	P	IDD Run Current	I_{DDR}		18	20	mA
2	P	IDD Wait Current	I_{DDW}		11	12	mA

Table A-12. Full Stop Current Characteristics

Conditions are: VDDR=5.5V, API see Table A-9.							
Num	**C**	**Rating**	**Symbol**	**Min**	**Typ**	**Max**	**Unit**
Stop Current API disabled							
1	P	150°C	I_{DDS}		250	1100	µA
2	P	-40°C	I_{DDS}		15	35	µA
3	P	25°C,	I_{DDS}		25	50	µA
Stop Current API enabled							
4	C	150°C,	I_{DDS}		270		µA
5	C	-40°C	I_{DDS}		20		µA
6	C	25°C	I_{DDS}		40		µA

Table A-13. Pseudo Stop Current Characteristics

Conditions are: VDDR=5.5V, RTI and COP and API enabled, see Table A-8.							
Num	**C**	**Rating**	**Symbol**	**Min**	**Typ**	**Max**	**Unit**
1	C	150°C	I_{DDPS}		450		µA
2	C	-40°C	I_{DDPS}		175		µA
3	C	25°C	I_{DDPS}		200		µA

A.2 ATD Characteristics

This section describes the characteristics of the analog-to-digital converter.

A.2.1 ATD Operating Characteristics

The Table A-14 and Table A-15 show conditions under which the ATD operates.

The following constraints exist to obtain full-scale, full range results:

$$V_{SSA} \le V_{RL} \le V_{IN} \le V_{RH} \le V_{DDA}.$$

This constraint exists since the sample buffer amplifier can not drive beyond the power supply levels that it ties to. If the input level goes outside of this range it will effectively be clipped.

Table A-14. ATD Operating Characteristics

Conditions are shown in Table A-4 unless otherwise noted, supply voltage 3.13 V < V_{DDA} < 5.5 V							
Num	**C**	**Rating**	**Symbol**	**Min**	**Typ**	**Max**	**Unit**
1	D	Reference potential Low High	 V_{RL} V_{RH}	 V_{SSA} $V_{DDA}/2$	 — —	 $V_{DDA}/2$ V_{DDA}	 V V
2	D	Voltage difference V_{DDX} to V_{DDA}	Δ_{VDDX}	–2.35	0	0.1	V
3	D	Voltage difference V_{SSX} to V_{SSA}	Δ_{VSSX}	–0.1	0	0.1	V
4	C	Differential reference voltage(1)	V_{RH}-V_{RL}	3.13	5.0	5.5	V
5	C	ATD Clock Frequency (derived from bus clock via the prescaler bus)	f_{ATDCLk}	0.25		8.0	MHz
6	P	ATD Clock Frequency in Stop mode (internal generated temperature and voltage dependent clock, ICLK)		0.6	1	1.7	MHz
7	D	ADC conversion in stop, recovery time(2)	$t_{ATDSTPRCV}$	—	—	1.5	us
8	D	ATD Conversion Period(3) 12 bit resolution: 10 bit resolution: 8 bit resolution:	 N_{CONV12} N_{CONV10} N_{CONV8}	 20 19 17		 42 41 39	 ATD clock Cycles

1. Full accuracy is not guaranteed when differential voltage is less than 4.50 V
2. When converting in Stop Mode (ICLKSTP=1) an ATD Stop Recovery time tATDSTPRCV is required to switch back to bus clock based ATDCLK when leaving Stop Mode. Do not access ATD registers during this time.
3. The minimum time assumes a sample time of 4 ATD clock cycles. The maximum time assumes a sample time of 24 ATD clock cycles and the discharge feature (SMP_DIS) enabled, which adds 2 ATD clock cycles.

A.2.2 Factors Influencing Accuracy

Source resistance, source capacitance and current injection have an influence on the accuracy of the ATD. A further factor is that PortAD pins that are configured as output drivers switching.

A.2.2.1 Port AD Output Drivers Switching

PortAD output drivers switching can adversely affect the ATD accuracy whilst converting the analog voltage on other PortAD pins because the output drivers are supplied from the VDDA/VSSA ATD supply pins. Although internal design measures are implemented to minimize the affect of output driver noise, it is recommended to configure PortAD pins as outputs only for low frequency, low load outputs. The impact on ATD accuracy is load dependent and not specified. The values specified are valid under condition that no PortAD output drivers switch during conversion.

A.2.2.2 Source Resistance

Due to the input pin leakage current as specified in Table A-6 and Table A-7 in conjunction with the source resistance there will be a voltage drop from the signal source to the ATD input. The maximum source resistance R_S specifies results in an error (10-bit resolution) of less than 1/2 LSB (2.5 mV) at the maximum leakage current. If device or operating conditions are less than worst case or leakage-induced error is acceptable, larger values of source resistance of up to 10Kohm are allowed.

A.2.2.3 Source Capacitance

When sampling an additional internal capacitor is switched to the input. This can cause a voltage drop due to charge sharing with the external and the pin capacitance. For a maximum sampling error of the input voltage ≤ 1LSB (10-bit resilution), then the external filter capacitor, $C_f \geq 1024 * (C_{INS}–C_{INN})$.

A.2.2.4 Current Injection

There are two cases to consider.

1. A current is injected into the channel being converted. The channel being stressed has conversion values of $3FF (in 10-bit mode) for analog inputs greater than V_{RH} and $000 for values less than V_{RL} unless the current is higher than specified as disruptive condition.
2. Current is injected into pins in the neighborhood of the channel being converted. A portion of this current is picked up by the channel (coupling ratio K), This additional current impacts the accuracy of the conversion depending on the source resistance.

   The additional input voltage error on the converted channel can be calculated as:

   $$V_{ERR} = K * R_S * I_{INJ}$$

   with I_{INJ} being the sum of the currents injected into the two pins adjacent to the converted channel.

Table A-15. ATD Electrical Characteristics

Conditions are shown in Table A-4 unless otherwise noted							
Num	**C**	**Rating**	**Symbol**	**Min**	**Typ**	**Max**	**Unit**
1	C	Max input source resistance(1)	R_S	—	—	1	KΩ
2	D	Total input capacitance Non sampling Total input capacitance Sampling	C_{INN} C_{INS}	— —	— —	10 16	pF
3	D	Input internal Resistance	R_{INA}	-	5	15	kΩ
4	C	Disruptive analog input current	I_{NA}	-2.5	—	2.5	mA
5	C	Coupling ratio positive current injection	K_p	—	—	1E-4	A/A
6	C	Coupling ratio negative current injection	K_n	—	—	5E-3	A/A

1. 1 Refer to A.2.2.2 for further information concerning source resistance

A.2.3 ATD Accuracy

Table A-16. and Table A-17. specifies the ATD conversion performance excluding any errors due to current injection, input capacitance and source resistance.

A.2.3.1 ATD Accuracy Definitions

For the following definitions see also Figure A-1.
Differential non-linearity (DNL) is defined as the difference between two adjacent switching steps.

$$DNL(i) = \frac{V_i - V_{i-1}}{1LSB} - 1$$

The integral non-linearity (INL) is defined as the sum of all DNLs:

$$INL(n) = \sum_{i=1}^{n} DNL(i) = \frac{V_n - V_0}{1LSB} - n$$

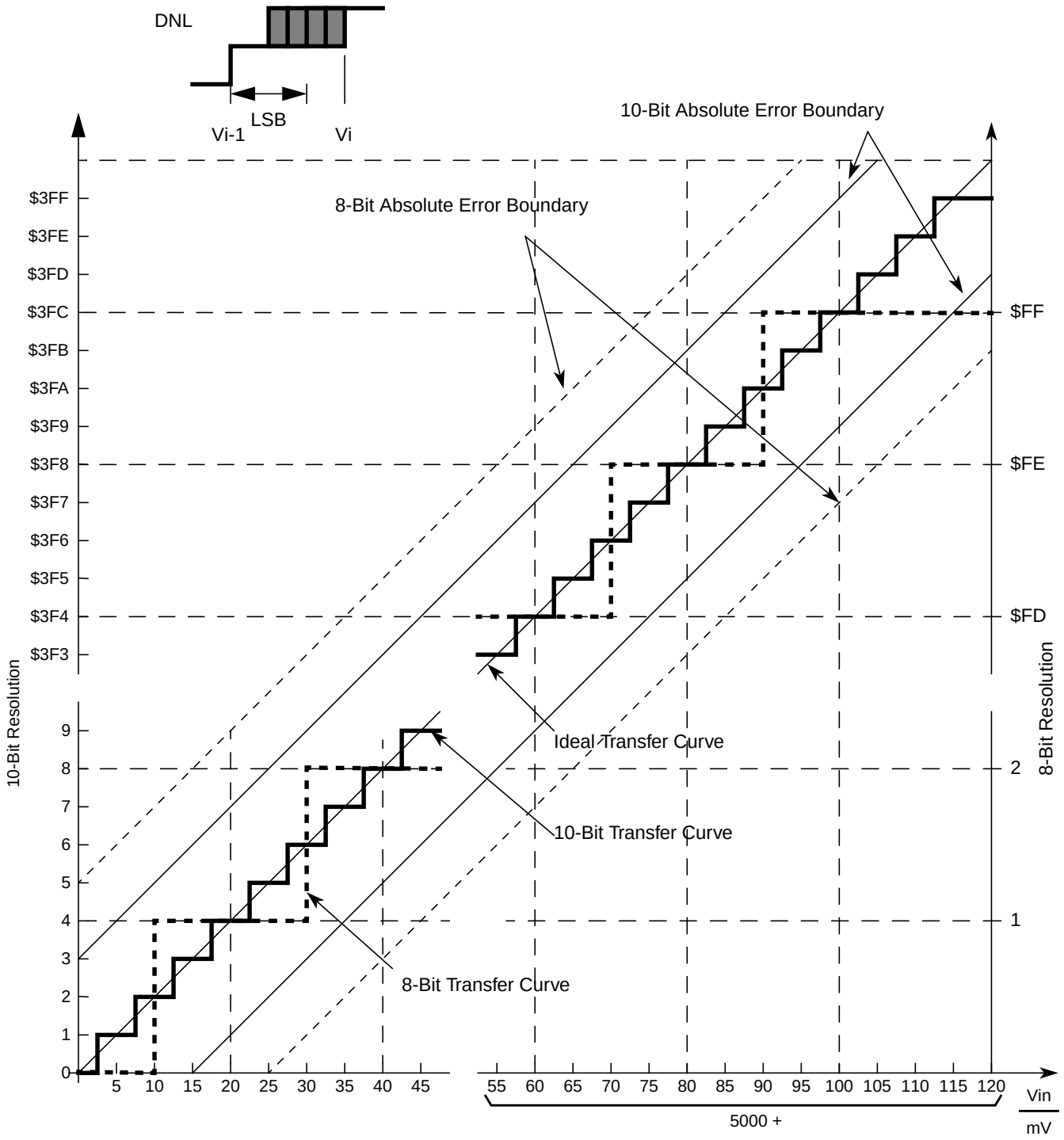

Figure A-1. ATD Accuracy Definitions

NOTE

Figure A-1 shows only definitions, for specification values refer to Table A-16 and Table A-17.

Table A-16. ATD Conversion Performance 5V range

Conditions are shown in Table A-4. unless otherwise noted. $V_{REF} = V_{RH} - V_{RL} = 5.12V$. $f_{ATDCLK} = 8.0MHz$
The values are tested to be valid with no PortAD output drivers switching simultaneous with conversions.

Num	C	Rating[1]		Symbol	Min	Typ	Max	Unit
1	P	Resolution	12-Bit	LSB		1.25		mV
2	P	Differential Nonlinearity	12-Bit	DNL	-4	±2	4	counts
3	P	Integral Nonlinearity	12-Bit	INL	-5	±2.5	5	counts
4	P	Absolute Error[2]	12-Bit	AE	-7	±4	7	counts
5	C	Resolution	10-Bit	LSB		5		mV
6	C	Differential Nonlinearity	10-Bit	DNL	-1	±0.5	1	counts
7	C	Integral Nonlinearity	10-Bit	INL	-2	±1	2	counts
8	C	Absolute Error[2.]	10-Bit	AE	-3	±2	3	counts
9	C	Resolution	8-Bit	LSB		20		mV
10	C	Differential Nonlinearity	8-Bit	DNL	-0.5	±0.3	0.5	counts
11	C	Integral Nonlinearity	8-Bit	INL	-1	±0.5	1	counts
12	C	Absolute Error[2.]	8-Bit	AE	-1.5	±1	1.5	counts

1. The 8-bit and 10-bit mode operation is structurally tested in production test. Absolute values are tested in 12-bit mode.
2. These values include the quantization error which is inherently 1/2 count for any A/D converter.

Table A-17. ATD Conversion Performance 3.3V range

Conditions are shown in Table A-4. unless otherwise noted. $V_{REF} = V_{RH} - V_{RL} = 3.3V$. $f_{ATDCLK} = 8.0MHz$
The values are tested to be valid with no PortAD output drivers switching simultaneous with conversions.

Num	C	Rating[1]		Symbol	Min	Typ	Max	Unit
1	P	Resolution	12-Bit	LSB		0.80		mV
2	P	Differential Nonlinearity	12-Bit	DNL	-6	±3	6	counts
3	P	Integral Nonlinearity	12-Bit	INL	-7	±3	7	counts
4	P	Absolute Error[2]	12-Bit	AE	-8	±4	8	counts
5	C	Resolution	10-Bit	LSB		3.22		mV
6	C	Differential Nonlinearity	10-Bit	DNL	-1.5	±1	1.5	counts
7	C	Integral Nonlinearity	10-Bit	INL	-2	±1	2	counts
8	C	Absolute Error[2.]	10-Bit	AE	-3	±2	3	counts
9	C	Resolution	8-Bit	LSB		12.89		mV
10	C	Differential Nonlinearity	8-Bit	DNL	-0.5	±0.3	0.5	counts
11	C	Integral Nonlinearity	8-Bit	INL	-1	±0.5	1	counts
12	C	Absolute Error[2.]	8-Bit	AE	-1.5	±1	1.5	counts

1. The 8-bit and 10-bit mode operation is structurally tested in production test. Absolute values are tested in 12-bit mode.
2. These values include the quantization error which is inherently 1/2 count for any A/D converter.

A.3 NVM

A.3.1 Timing Parameters

The time base for all NVM program or erase operations is derived from the bus clock using the FCLKDIV register. The frequency of this derived clock must be set within the limits specified as f_{NVMOP}. The NVM module does not have any means to monitor the frequency and will not prevent program or erase operation at frequencies above or below the specified minimum. When attempting to program or erase the NVM module at a lower frequency, a full program or erase transition is not assured.

The following sections provide equations which can be used to determine the time required to execute specific flash commands. All timing parameters are a function of the bus clock frequency, f_{NVMBUS}. All program and erase times are also a function of the NVM operating frequency, f_{NVMOP}. A summary of key timing parameters can be found in Table A-18.

A.3.1.1 Erase Verify All Blocks (Blank Check) (FCMD=0x01)

The time required to perform a blank check on all blocks is dependent on the location of the first non-blank word starting at relative address zero. It takes one bus cycle per phrase to verify plus a setup of the command. Assuming that no non-blank location is found, then the time to erase verify all blocks is given by:

$$t_{check} = 35500 \cdot \frac{1}{f_{NVMBUS}}$$

A.3.1.2 Erase Verify Block (Blank Check) (FCMD=0x02)

The time required to perform a blank check is dependent on the location of the first non-blank word starting at relative address zero. It takes one bus cycle per phrase to verify plus a setup of the command.

Assuming that no non-blank location is found, then the time to erase verify a P-Flash block is given by:

$$t_{pcheck} = 33500 \cdot \frac{1}{f_{NVMBUS}}$$

Assuming that no non-blank location is found, then the time to erase verify a D-Flash block is given by:

$$t_{dcheck} = 2800 \cdot \frac{1}{f_{NVMBUS}}$$

A.3.1.3 Erase Verify P-Flash Section (FCMD=0x03)

The maximum time to erase verify a section of P-Flash depends on the number of phrases being verified (N_{VP}) and is given by:

$$t \approx (450 + N_{VP}) \cdot \frac{1}{f_{NVMBUS}}$$

A.3.1.4 Read Once (FCMD=0x04)

The maximum read once time is given by:

$$t = 400 \cdot \frac{1}{f_{NVMBUS}}$$

A.3.1.5 Program P-Flash (FCMD=0x06)

The programming time for a single phrase of four P-Flash words and the two seven-bit ECC fields is dependent on the bus frequency, f_{NVMBUS}, as well as on the NVM operating frequency, f_{NVMOP}.

The typical phrase programming time is given by:

$$t_{ppgm} \approx 164 \cdot \frac{1}{f_{NVMOP}} + 2000 \cdot \frac{1}{f_{NVMBUS}}$$

The maximum phrase programming time is given by:

$$t_{ppgm} \approx 164 \cdot \frac{1}{f_{NVMOP}} + 2500 \cdot \frac{1}{f_{NVMBUS}}$$

A.3.1.6 Program Once (FCMD=0x07)

The maximum time required to program a P-Flash Program Once field is given by:

$$t \approx 164 \cdot \frac{1}{f_{NVMOP}} + 2150 \cdot \frac{1}{f_{NVMBUS}}$$

A.3.1.7 Erase All Blocks (FCMD=0x08)

The time required to erase all blocks is given by:

$$t_{mass} \approx 100100 \cdot \frac{1}{f_{NVMOP}} + 70000 \cdot \frac{1}{f_{NVMBUS}}$$

A.3.1.8 Erase P-Flash Block (FCMD=0x09)

The time required to erase the P-Flash block is given by:

$$t_{pmass} \approx 100100 \cdot \frac{1}{f_{NVMOP}} + 67000 \cdot \frac{1}{f_{NVMBUS}}$$

A.3.1.9 Erase P-Flash Sector (FCMD=0x0A)

The typical time to erase a 512-byte P-Flash sector is given by:

$$t_{pera} \approx 20020 \cdot \frac{1}{f_{NVMOP}} + 700 \cdot \frac{1}{f_{NVMBUS}}$$

The maximum time to erase a 512-byte P-Flash sector is given by:

$$t_{pera} \approx 20020 \cdot \frac{1}{f_{NVMOP}} + 1400 \cdot \frac{1}{f_{NVMBUS}}$$

A.3.1.10 Unsecure Flash (FCMD=0x0B)

The maximum time required to erase and unsecure the Flash is given by:

for 128 Kbyte P-Flash and 4 Kbyte D-Flash

$$t_{uns} \approx 100100 \cdot \frac{1}{f_{NVMOP}} + 70000 \cdot \frac{1}{f_{NVMBUS}}$$

A.3.1.11 Verify Backdoor Access Key (FCMD=0x0C)

The maximum verify backdoor access key time is given by:

$$t = 400 \cdot \frac{1}{f_{NVMBUS}}$$

A.3.1.12 Set User Margin Level (FCMD=0x0D)

The maximum set user margin level time is given by:

$$t = 350 \cdot \frac{1}{f_{NVMBUS}}$$

A.3.1.13 Set Field Margin Level (FCMD=0x0E)

The maximum set field margin level time is given by:

$$t = 350 \cdot \frac{1}{f_{NVMBUS}}$$

A.3.1.14 Erase Verify D-Flash Section (FCMD=0x10)

The time required to Erase Verify D-Flash for a given number of words N_W is given by:

$$t_{dcheck} \approx (450 + N_W) \cdot \frac{1}{f_{NVMBUS}}$$

A.3.1.15 Program D-Flash (FCMD=0x11)

D-Flash programming time is dependent on the number of words being programmed and their location with respect to a row boundary since programming across a row boundary requires extra steps. The D-Flash programming time is specified for different cases: 1,2,3,4 words and 4 words across a row boundary.

The typical D-Flash programming time is given by the following equation, where N_W denotes the number of words; BC=0 if no row boundary is crossed and BC=1 if a row boundary is crossed:

$$t_{dpgm} \approx \left((14 + (54 \cdot N_W) + (14 \cdot BC)) \cdot \frac{1}{f_{NVMOP}}\right) + \left((500 + (525 \cdot N_W) + (100 \cdot BC)) \cdot \frac{1}{f_{NVMBUS}}\right)$$

The maximum D-Flash programming time is given by:

$$t_{dpgm} \approx \left((14 + (54 \cdot N_W) + (14 \cdot BC)) \cdot \frac{1}{f_{NVMOP}}\right) + \left((500 + (750 \cdot N_W) + (100 \cdot BC)) \cdot \frac{1}{f_{NVMBUS}}\right)$$

A.3.1.16 Erase D-Flash Sector (FCMD=0x12)

Typical D-Flash sector erase times, expected on a new device where no margin verify fails occur, is given by:

$$t_{dera} \approx 5025 \cdot \frac{1}{f_{NVMOP}} + 700 \cdot \frac{1}{f_{NVMBUS}}$$

Maximum D-Flash sector erase times is given by:

$$t_{dera} \approx 20100 \cdot \frac{1}{f_{NVMOP}} + 3400 \cdot \frac{1}{f_{NVMBUS}}$$

The D-Flash sector erase time is ~5ms on a new device and can extend to ~20ms as the flash is cycled.

Table A-18. NVM Timing Characteristics (FTMRC)

Num	C	Rating	Symbol	Min	Typ(1)	Max(2)	Unit(3)
1		Bus frequency	f_{NVMBUS}	1	—	32	MHz
2		Operating frequency	f_{NVMOP}	0.8	1.0	1.05	MHz
3	D	Erase all blocks (mass erase) time	t_{mass}	—	100	130	ms
4	D	Erase verify all blocks (blank check) time	t_{check}	—	—	35500	t_{cyc}
5	D	Unsecure Flash time	t_{uns}	—	100	130	ms
6	D	P-Flash block erase time	t_{pmass}	—	100	130	ms
7	D	P-Flash erase verify (blank check) time	t_{pcheck}	—	—	33500	t_{cyc}
8	D	P-Flash sector erase time	t_{pera}	—	20	26	ms
9	D	P-Flash phrase programming time	t_{ppgm}	—	226	285	µs
10	D	D-Flash sector erase time	t_{dera}	—	5(4)	26	ms
11	D	D-Flash erase verify (blank check) time	t_{dcheck}	—	—	2800	t_{cyc}
12a	D	D-Flash one word programming time	t_{dpgm1}	—	100	107	µs
12b	D	D-Flash two word programming time	t_{dpgm2}	—	170	185	µs
12c	D	D-Flash three word programming time	t_{dpgm3}	—	241	262	µs
12d	D	D-Flash four word programming time	t_{dpgm4}	—	311	339	µs
12e	D	D-Flash four word programming time crossing row boundary	t_{dpgm4c}	—	328	357	µs

1. Typical program and erase times are based on typical f_{NVMOP} and maximum f_{NVMBUS}
2. Maximum program and erase times are based on minimum f_{NVMOP} and maximum f_{NVMBUS}
3. $t_{cyc} = 1 / f_{NVMBUS}$
4. Typical value for a new device

A.3.2 NVM Reliability Parameters

The reliability of the NVM blocks is guaranteed by stress test during qualification, constant process monitors and burn-in to screen early life failures.

The data retention and program/erase cycling failure rates are specified at the operating conditions noted. The program/erase cycle count on the sector is incremented every time a sector or mass erase event is executed.

NOTE

All values shown in Table A-19 are preliminary and subject to further characterization.

Table A-19. NVM Reliability Characteristics

Conditions are shown in Table A-4 unless otherwise noted							
Num	**C**	**Rating**	**Symbol**	**Min**	**Typ**	**Max**	**Unit**
Program Flash Arrays							
1	C	Data retention at an average junction temperature of T_{Javg} = 85°C(1) after up to 10,000 program/erase cycles	t_{NVMRET}	20	100(2)	—	Years
2	C	Program Flash number of program/erase cycles (-40°C ≤ tj ≤ 150°C)	n_{FLPE}	10K	100K(3)	—	Cycles
Data Flash Array							
3	C	Data retention at an average junction temperature of T_{Javg} = 85°C1 after up to 50,000 program/erase cycles	t_{NVMRET}	5	100[2]	—	Years
4	C	Data retention at an average junction temperature of T_{Javg} = 85°C1 after up to 10,000 program/erase cycles	t_{NVMRET}	10	100[2]	—	Years
5	C	Data retention at an average junction temperature of T_{Javg} = 85°C1 after less than 100 program/erase cycles	t_{NVMRET}	20	100[2]	—	Years
6	C	Data Flash number of program/erase cycles (-40°C ≤ tj ≤ 150°C)	n_{FLPE}	50K	500K[3]	—	Cycles

1. T_{Javg} does not exceed 85°C in a typical temperature profile over the lifetime of a consumer, industrial or automotive application.
2. Typical data retention values are based on intrinsic capability of the technology measured at high temperature and de-rated to 25°C using the Arrhenius equation. For additional information on how Freescale defines Typical Data Retention, please refer to Engineering Bulletin EB618
3. Spec table quotes typical endurance evaluated at 25°C for this product family. For additional information on how Freescale defines Typical Endurance, please refer to Engineering Bulletin EB619.

A.4 Phase Locked Loop

A.4.1 Jitter Definitions

With each transition of the feedback clock, the deviation from the reference clock is measured and input voltage to the VCO is adjusted accordingly.The adjustment is done continuously with no abrupt changes in the VCOCLK frequency. Noise, voltage, temperature and other factors cause slight variations in the control loop resulting in a clock jitter. This jitter affects the real minimum and maximum clock periods as illustrated in Figure A-2.

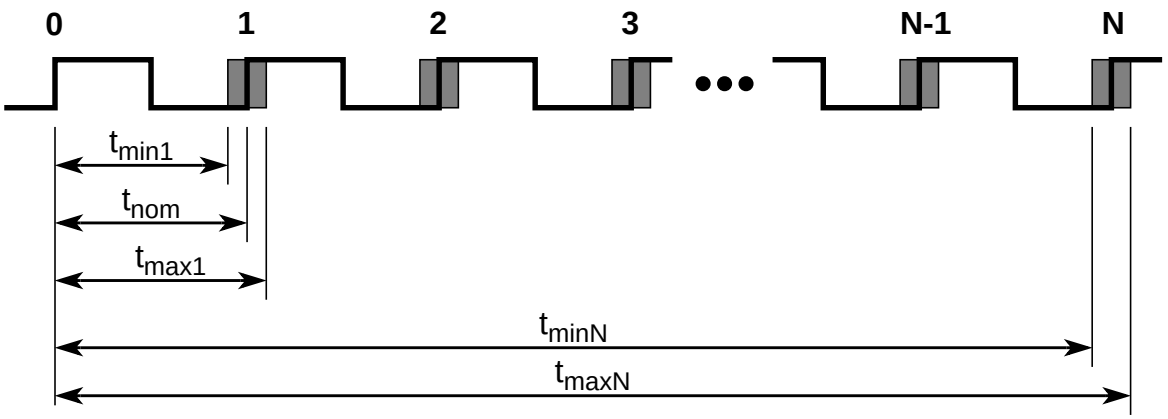

Figure A-2. Jitter Definitions

The relative deviation of t_{nom} is at its maximum for one clock period, and decreases towards zero for larger number of clock periods (N).

Defining the jitter as:

$$J(N) = \max\left(\left|1 - \frac{t_{max}(N)}{N \cdot t_{nom}}\right|, \left|1 - \frac{t_{min}(N)}{N \cdot t_{nom}}\right|\right)$$

For N < 100, the following equation is a good fit for the maximum jitter:

$$J(N) = \frac{j_1}{\sqrt{N}}$$

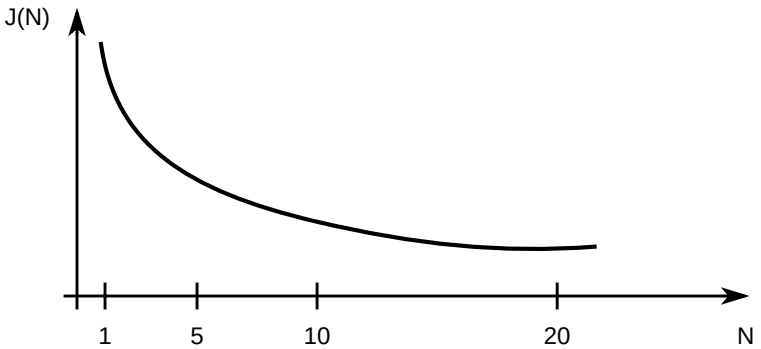

Figure A-3. Maximum Bus Clock Jitter Approximation

NOTE

On timers and serial modules a prescaler will eliminate the effect of the jitter to a large extent.

A.4.2 Electrical Characteristics for the PLL

Table A-20. PLL Characteristics

Conditions are shown in Table A-4 unless otherwise noted							
Num	**C**	**Rating**	**Symbol**	**Min**	**Typ**	**Max**	**Unit**
1	D	VCO frequency during system reset	f_{VCORST}	8		32	MHz
2	C	VCO locking range	f_{VCO}	32		64	MHz
3	C	Reference Clock	f_{REF}	1			MHz
4	D	Lock Detection	$\|\Delta_{Lock}\|$	0		1.5	%(1)
6	D	Un-Lock Detection	$\|\Delta_{unl}\|$	0.5		2.5	%1
7	C	Time to lock	t_{lock}			150 + $256/f_{REF}$	µs
8	C	Jitter fit parameter 1(2)	j_1			1.4	%

1. % deviation from target frequency

2. f_{REF} = 4MHz oscillator, f_{BUS} = 32MHz equivalent f_{PLL} = 64MHz, CPMUREFDIV=$40, CPMUSYNR=$47, CPMUPOSTDIV=$00

A.5 Electrical Characteristics for the IRC1M

Table A-21. IRC1M Characteristics

Conditions are shown in Table A-4 unless otherwise noted							
Num	**C**	**Rating**	**Symbol**	**Min**	**Typ**	**Max**	**Unit**
1	P	Junction Temperature -40°C to 150°C Internal Reference Frequency, factory trimmed	f_{IRC1M_TRIM}	0.985	1	1.015	MHz

A.6 Electrical Characteristics for the Oscillator (OSCLCP)

Table A-22. OSCLCP Characteristics

Conditions are shown in Table A-4 unless otherwise noted							
Num	**C**	**Rating**	**Symbol**	**Min**	**Typ**	**Max**	**Unit**
1	C	Crystal oscillator range	f_{OSC}	4.0		16	MHz
2	P	Startup Current	i_{OSC}	100			µA
3a	C	Oscillator start-up time (LCP, 4MHz)(1)	t_{UPOSC}	—	2	10	ms
3b	C	Oscillator start-up time (LCP, 8MHz)[1]	t_{UPOSC}	—	1.6	8	ms
3c	C	Oscillator start-up time (LCP, 16MHz)[1]	t_{UPOSC}	—	1	5	ms
4	P	Clock Monitor Failure Assert Frequency	f_{CMFA}	200	400	1000	KHz
5	D	Input Capacitance (EXTAL, XTAL pins)	C_{IN}		7		pF
6	C	EXTAL Pin Input Hysteresis	$V_{HYS,EXTAL}$	—	180	—	mV
7	C	EXTAL Pin oscillation amplitude (loop controlled Pierce)	$V_{PP,EXTAL}$	—	0.9	—	V

1. These values apply for carefully designed PCB layouts with capacitors that match the crystal/resonator requirements.

A.7 Reset Characteristics

Table A-23. Reset and Stop & Startup Characteristics

Conditions are shown in Table A-4 unless otherwise noted							
Num	**C**	**Rating**	**Symbol**	**Min**	**Typ**	**Max**	**Unit**
1	C	Reset input pulse width, minimum input time	PW_{RSTL}	2			t_{VCORST}
2	C	Startup from Reset	n_{RST}		768		t_{VCORST}
3	C	STOP recovery time	t_{STP_REC}		50		µs

A.8 Electrical Specification for Voltage Regulator

Table A-24. IVREG Characteristics

Num	C	Characteristic	Symbol	Min	Typical	Max	Unit
1	P	Input Voltages	$V_{VDDR,A}$	3.13	—	5.5	V
2	P	VDDA Low Voltage Interrupt Assert Level (1) VDDA Low Voltage Interrupt Deassert Level	V_{LVIA} V_{LVID}	4.04 4.19	4.23 4.38	4.40 4.49	V V
3	P	VDDX Low Voltage Reset Deassert (2) (3)	V_{LVRXD}	—	—	3.13	V
4	P	VDDX Low Voltage Reset Assert (2) (3)	V_{LVRXA}	2.95	—	—	V
5	T	API ACLK frequency (APITR[5:0] = %000000)	f_{ACLK}	—	10	—	KHz
6	C	Trimmed API internal clock(4) $\Delta f / f_{nominal}$	df_{ACLK}	- 5%	—	+ 5%	—
7	D	The first period after enabling the counter by APIFE might be reduced by API start up delay	t_{sdel}	—	—	100	us
8	T	Temperature Sensor Slope	dV_{TS}	4.0	5.5	6.5	mV/ ^{o}C
9	T	High Temperature Interrupt Assert (CPMUHTTR=$88)(5) High Temperature Interrupt Deassert (CPMUHTTR=$88)	T_{HTIA} T_{HTID}		125 105		^{o}C
10	T	Bandgap Reference Voltage	V_{BG}	1.13	1.21	1.32	V

1. Monitors VDDA, active only in Full Performance Mode. Indicates I/O & ADC performance degradation due to low supply voltage.
2. Device functionality is guaranteed on power down to the LVR assert level
3. Monitors VDDX, active only in Full Performance Mode. MCU is monitored by the POR in RPM (see Figure A-4)
4. The API Trimming APITR[5:0] bits must be set so that f_{ACLK}=10KHz.
5. A hysteresis is guaranteed by design

NOTE

The LVR monitors the voltages V_{DD}, V_{DDF} and V_{DDX}. As soon as voltage drops on these supplies which would prohibit the correct function of the microcontroller, the LVR is triggering a reset.

A.9 Chip Power-up and Voltage Drops

LVI (low voltage interrupt), POR (power-on reset) and LVRs (low voltage reset) handle chip power-up or drops of the supply voltage.

Figure A-4. MC9S12P-Family - Chip Power-up and Voltage Drops (not scaled)

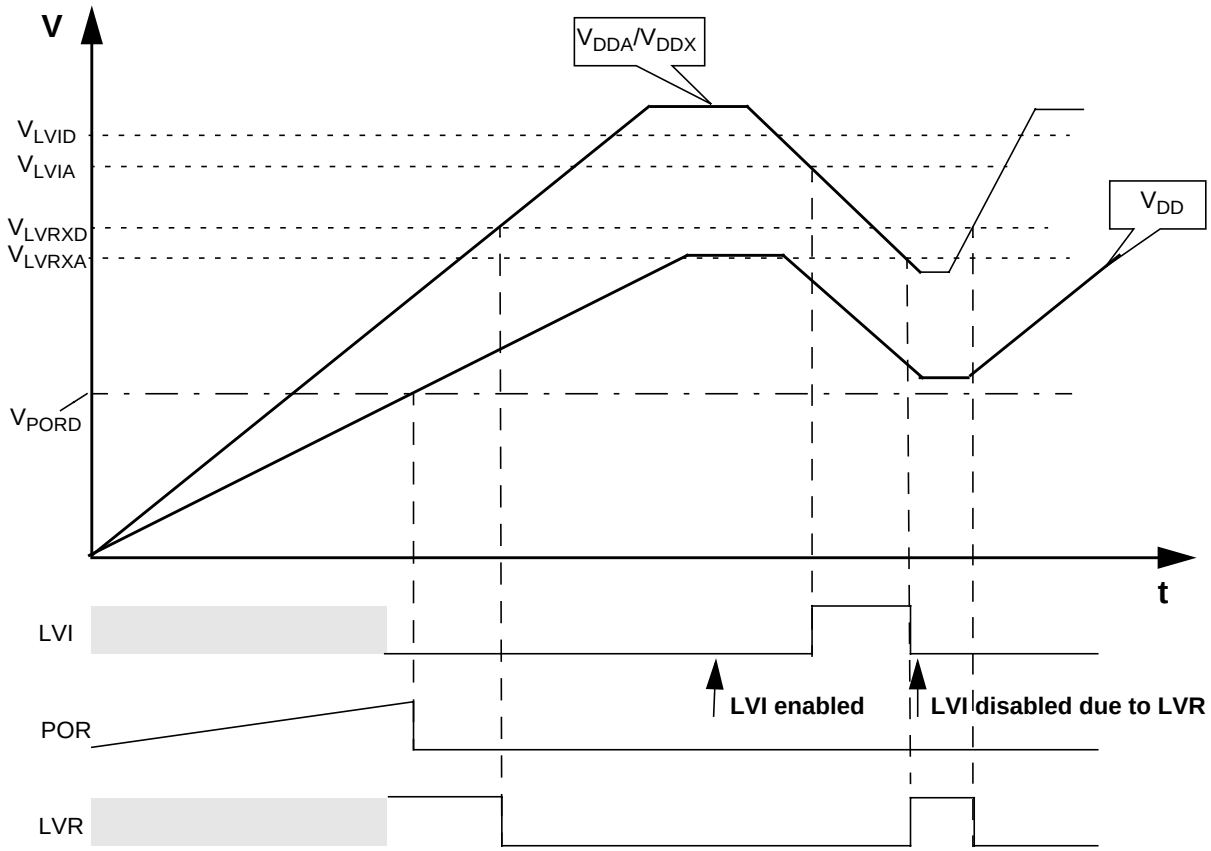

A.10 MSCAN

Table A-25. MSCAN Wake-up Pulse Characteristics

Conditions are shown in Table A-4 unless otherwise noted							
Num	**C**	**Rating**	**Symbol**	**Min**	**Typ**	**Max**	**Unit**
1	P	MSCAN wakeup dominant pulse filtered	t_{WUP}	—	—	1.5	µs
2	P	MSCAN wakeup dominant pulse pass	t_{WUP}	5	—	—	µs

A.11 SPI Timing

This section provides electrical parametrics and ratings for the SPI. In Table A-26 the measurement conditions are listed.

Table A-26. Measurement Conditions

Description	Value	Unit
Drive mode	Full drive mode	—
Load capacitance C_{LOAD}[(1)], on all outputs	50	pF
Thresholds for delay measurement points	(20% / 80%) V_{DDX}	V

1. Timing specified for equal load on all SPI output pins. Avoid asymmetric load.

A.11.1 Master Mode

In Figure A-5 the timing diagram for master mode with transmission format CPHA = 0 is depicted.

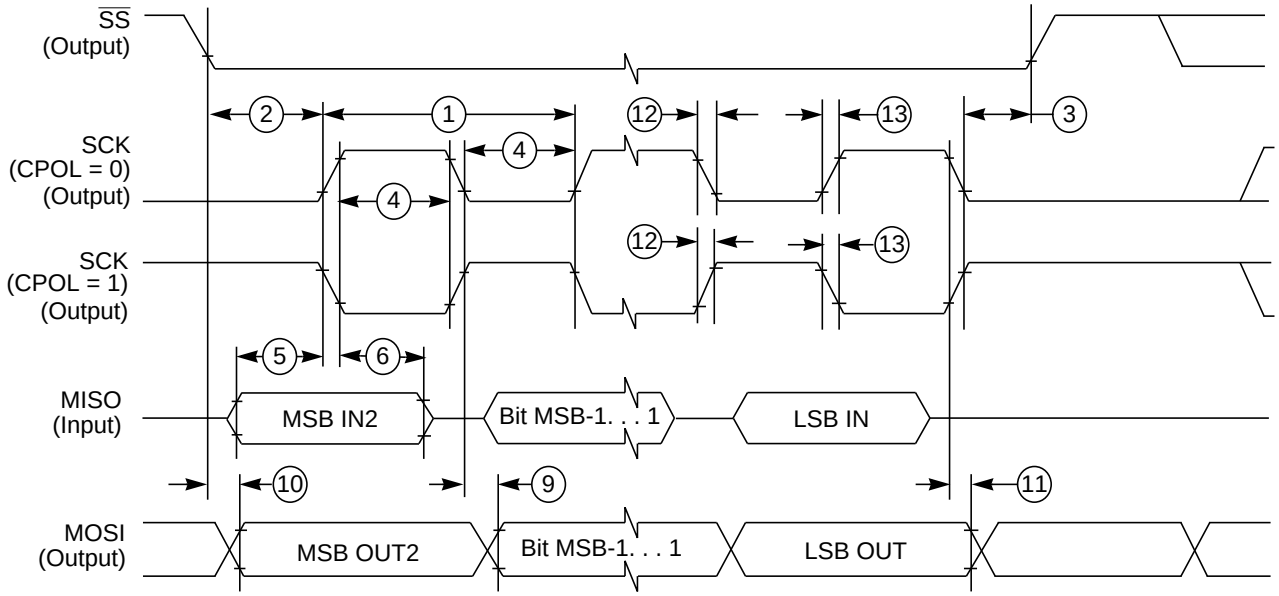

1. If configured as an output.
2. LSBF = 0. For LSBF = 1, bit order is LSB, bit 1, bit 2... MSB.

Figure A-5. SPI Master Timing (CPHA = 0)

In Figure A-6 the timing diagram for master mode with transmission format CPHA=1 is depicted.

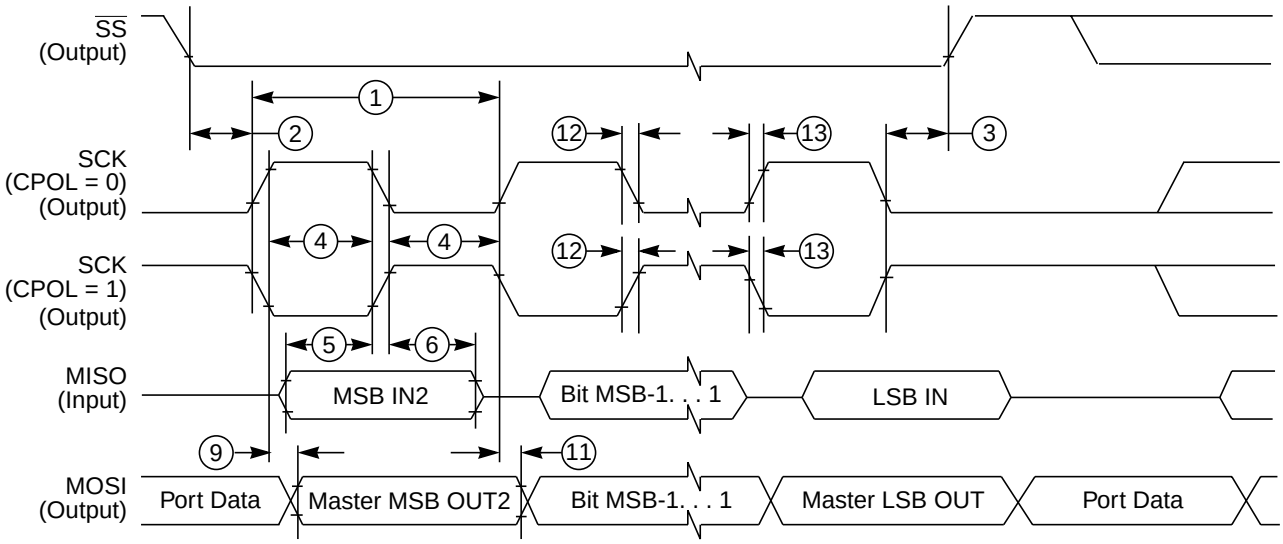

1.If configured as output
2. LSBF = 0. For LSBF = 1, bit order is LSB, bit 1,bit 2... MSB.

Figure A-6. SPI Master Timing (CPHA = 1)

In Table A-27 the timing characteristics for master mode are listed.

Table A-27. SPI Master Mode Timing Characteristics

Num	C	Characteristic	Symbol	Min	Typ	Max	Unit
1	D	SCK frequency	f_{sck}	1/2048	—	1/2	f_{bus}
1	D	SCK period	t_{sck}	2	—	2048	t_{bus}
2	D	Enable lead time	t_{lead}	—	1/2	—	t_{sck}
3	D	Enable lag time	t_{lag}	—	1/2	—	t_{sck}
4	D	Clock (SCK) high or low time	t_{wsck}	—	1/2	—	t_{sck}
5	D	Data setup time (inputs)	t_{su}	8	—	—	ns
6	D	Data hold time (inputs)	t_{hi}	8	—	—	ns
9	D	Data valid after SCK edge	t_{vsck}	—	—	29	ns
10	D	Data valid after $\overline{SS}$ fall (CPHA = 0)	t_{vss}	—	—	15	ns
11	D	Data hold time (outputs)	t_{ho}	20	—	—	ns
12	D	Rise and fall time inputs	t_{rfi}	—	—	8	ns
13	D	Rise and fall time outputs	t_{rfo}	—	—	8	ns

A.11.2 Slave Mode

In Figure A-7 the timing diagram for slave mode with transmission format CPHA = 0 is depicted.

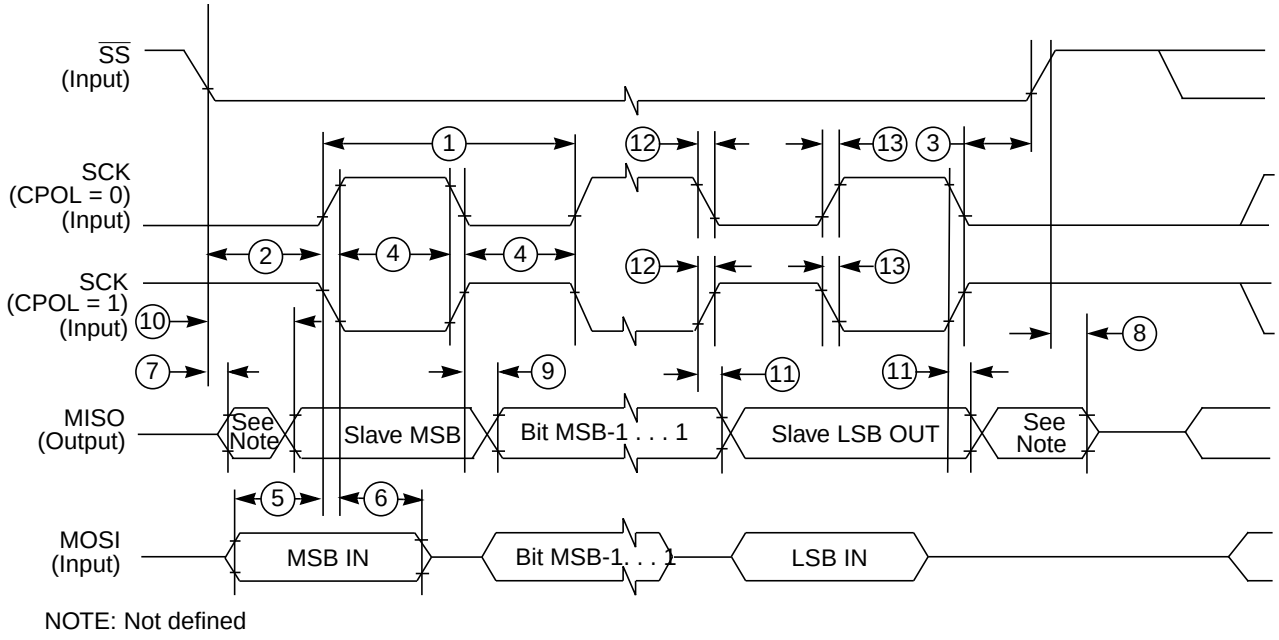

NOTE: Not defined

Figure A-7. SPI Slave Timing (CPHA = 0)

In Figure A-8 the timing diagram for slave mode with transmission format CPHA = 1 is depicted.

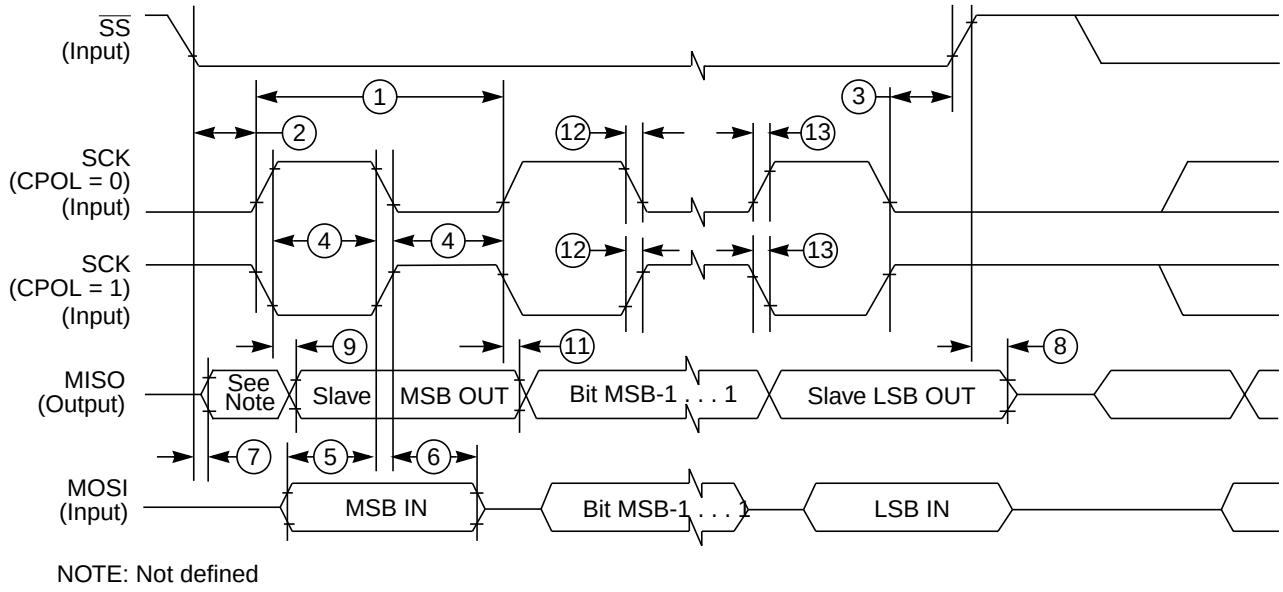

NOTE: Not defined

Figure A-8. SPI Slave Timing (CPHA = 1)

In Table A-28 the timing characteristics for slave mode are listed.

Table A-28. SPI Slave Mode Timing Characteristics

Num	C	Characteristic	Symbol	Min	Typ	Max	Unit
1	D	SCK frequency	f_{sck}	DC	—	1/4	f_{bus}
1	D	SCK period	t_{sck}	4	—	∞	t_{bus}
2	D	Enable lead time	t_{lead}	4	—	—	t_{bus}
3	D	Enable lag time	t_{lag}	4	—	—	t_{bus}
4	D	Clock (SCK) high or low time	t_{wsck}	4	—	—	t_{bus}
5	D	Data setup time (inputs)	t_{su}	8	—	—	ns
6	D	Data hold time (inputs)	t_{hi}	8	—	—	ns
7	D	Slave access time (time to data active)	t_a	—	—	20	ns
8	D	Slave MISO disable time	t_{dis}	—	—	22	ns
9	D	Data valid after SCK edge	t_{vsck}	—	—	$29 + 0.5 \cdot t_{bus}$ (1)	ns
10	D	Data valid after $\overline{SS}$ fall	t_{vss}	—	—	$29 + 0.5 \cdot t_{bus}$ 1	ns
11	D	Data hold time (outputs)	t_{ho}	20	—	—	ns
12	D	Rise and fall time inputs	t_{rfi}	—	—	8	ns
13	D	Rise and fall time outputs	t_{rfo}	—	—	8	ns

1. 0.5 t_{bus} added due to internal synchronization delay

Appendix B
Ordering Information

The following figure provides an ordering partnumber example for the devices covered by this data book. There are two options when ordering a device. Customers must choose between ordering either the mask-specific partnumber or the generic / mask-independent partnumber. Ordering the mask-specific partnumber enables the customer to specify which particular maskset they will receive whereas ordering the generic maskset means that FSL will ship the currently preferred maskset (which may change over time).

In either case, the marking on the device will always show the generic / mask-independent partnumber and the mask set number.

NOTE

The mask identifier suffix and the Tape & Reel suffix are always both omitted from the partnumber which is actually marked on the device.

For specific partnumbers to order, please contact your local sales office. The below figure illustrates the structure of a typical mask-specific ordering number for the MC9S12P-Family devices

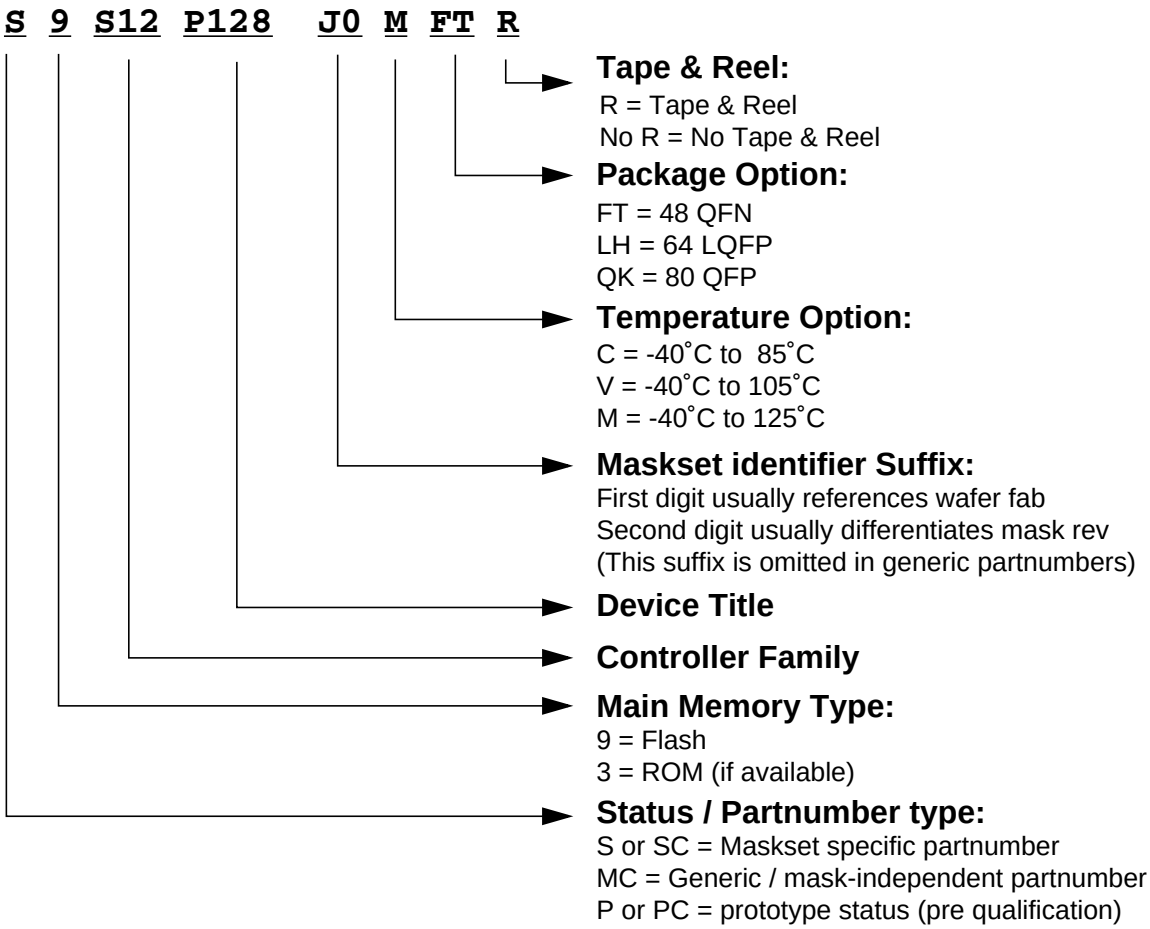

Appendix C
Package Information

This section provides the physical dimensions of the MC9S12P-Family packages.

NOTE

The exposed pad of the 48 QFN package should be attached to Vss ground plane.

C.1 80 QFP Package Mechanical Outline

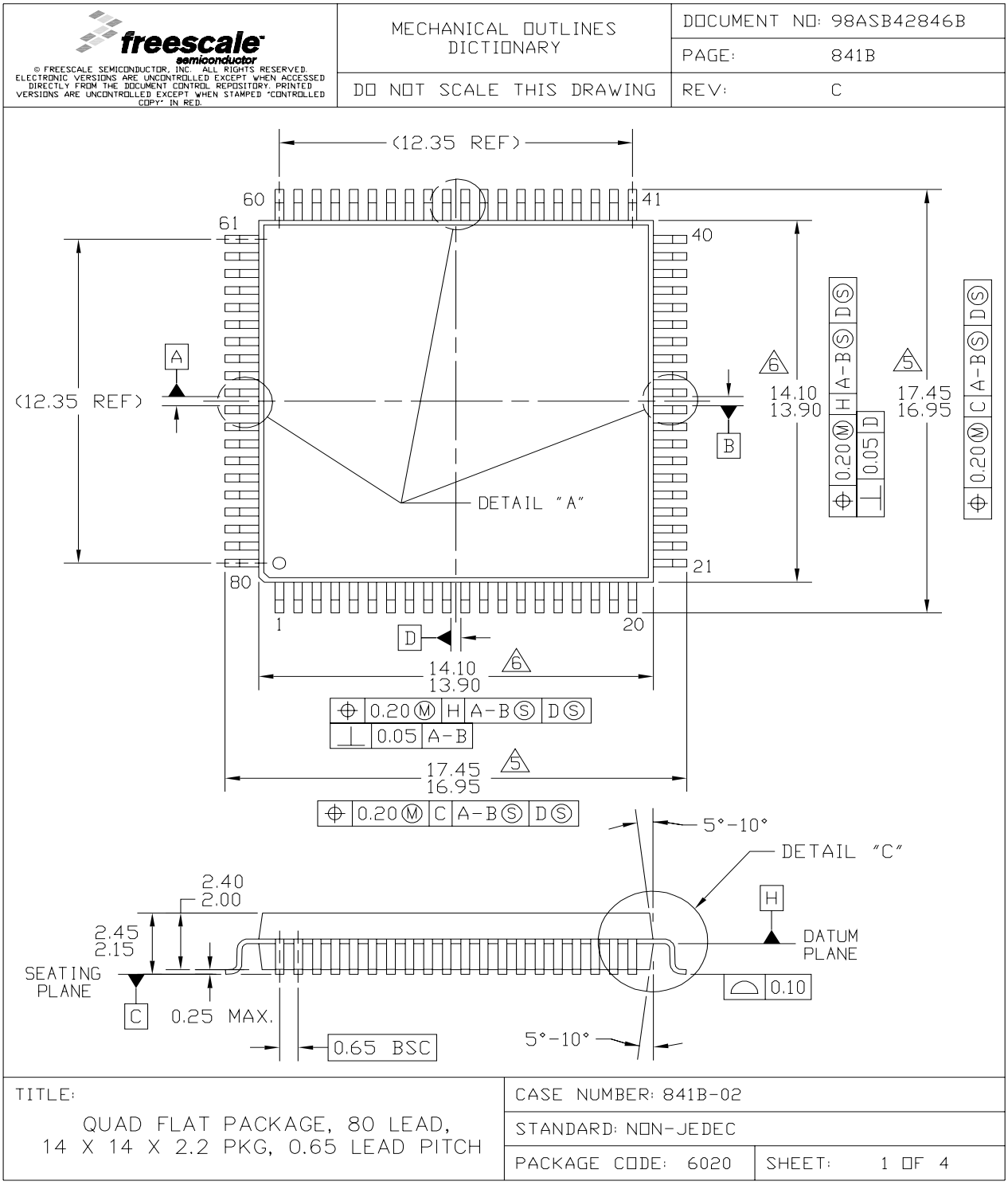

freescale semiconductor

© FREESCALE SEMICONDUCTOR, INC. ALL RIGHTS RESERVED.
ELECTRONIC VERSIONS ARE UNCONTROLLED EXCEPT WHEN ACCESSED DIRECTLY FROM THE DOCUMENT CONTROL REPOSITORY. PRINTED VERSIONS ARE UNCONTROLLED EXCEPT WHEN STAMPED "CONTROLLED COPY" IN RED.

MECHANICAL OUTLINES DICTIONARY	DOCUMENT NO: 98ASB42846B
	PAGE: 841B
DO NOT SCALE THIS DRAWING	REV: C

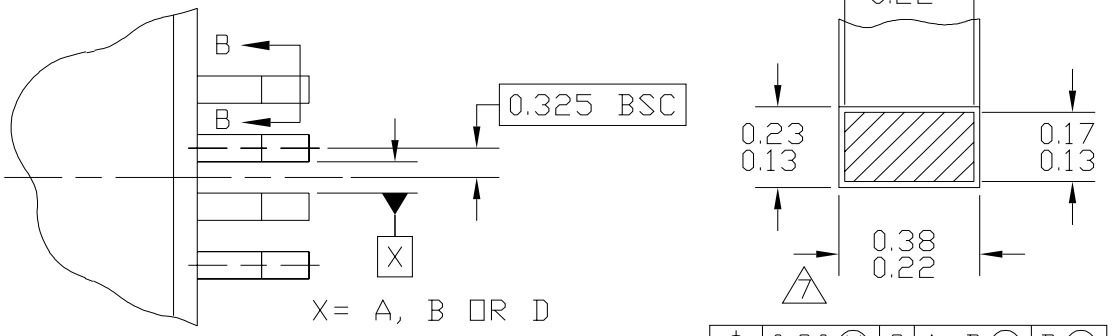

DETAIL "A"

SECTION B-B
VIEW ROTATED 90°

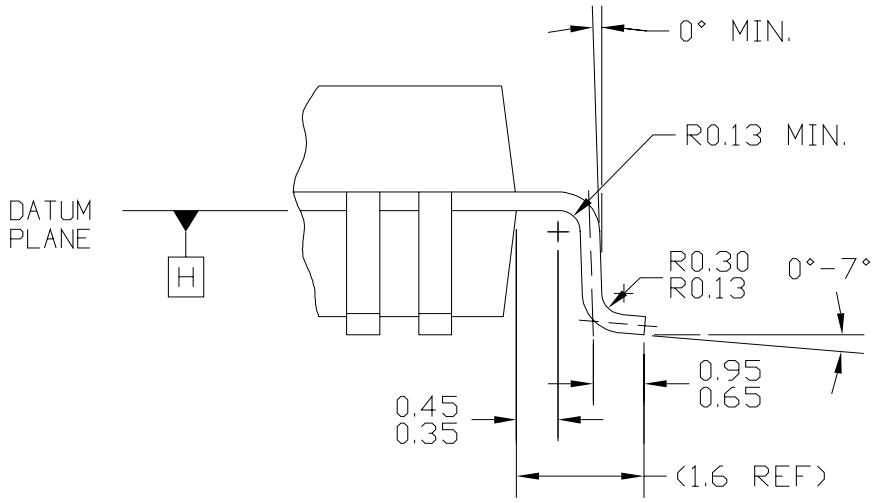

DETAIL "C"

TITLE: QUAD FLAT PACKAGE, 80 LEAD, 14 X 14 X 2.2 PKG, 0.65 LEAD PITCH	CASE NUMBER: 841B-02	
	STANDARD: NON-JEDEC	
	PACKAGE CODE: 6020	SHEET: 2 OF 4

freescale semiconductor	MECHANICAL OUTLINES DICTIONARY	DOCUMENT NO: 98ASB42846B
		PAGE: 841B
	DO NOT SCALE THIS DRAWING	REV: C

© FREESCALE SEMICONDUCTOR, INC. ALL RIGHTS RESERVED.
ELECTRONIC VERSIONS ARE UNCONTROLLED EXCEPT WHEN ACCESSED DIRECTLY FROM THE DOCUMENT CONTROL REPOSITORY. PRINTED VERSIONS ARE UNCONTROLLED EXCEPT WHEN STAMPED "CONTROLLED COPY" IN RED.

NOTES:

1. DIMENSIONING AND TOLERANCING PER ANSI Y14.5M, 1982.
2. CONTROLLING DIMENSION: MILLIMETER.
3. DATUM PLANE -H- IS LOCATED AT BOTTOM OF LEAD AND IS COINCIDENT WITH THE LEAD WHERE THE LEAD EXITS THE PLASTIC BODY AT THE BOTTOM OF THE PARTING LINE.
4. DATUMS A-B AND -D- TO BE DETERMINED AT DATUM PLANE -H-.
5. DIMENSIONS TO BE DETERMINED AT SEATING PLANE -C-.
6. DIMENSIONS DO NOT INCLUDE MOLD PROTRUSION. ALLOWABLE PROTRUSION IS 0.25 PER SIDE. DIMENSIONS DO INCLUDE MOLD MISMATCH AND ARE DETERMINED AT DATUM PLANE -H-.
7. DIMENSION DOES NOT INCLUDE DAMBAR PROTRUSION. ALLOWABLE DAMBAR PROTRUSION SHALL BE 0.08 TOTAL IN EXCESS OF THE DIMENSION AT MAXIMUM MATERIAL CONDITION. DAMBAR CANNOT BE LOCATED ON THE LOWER RADIUS OR THE FOOT.

TITLE:	CASE NUMBER: 841B-02	
QUAD FLAT PACKAGE, 80 LEAD, 14 X 14 X 2.2 PKG, 0.65 LEAD PITCH	STANDARD: NON-JEDEC	
	PACKAGE CODE: 6020	SHEET: 3 OF 4

C.2 48 QFN Package Mechanical Outline

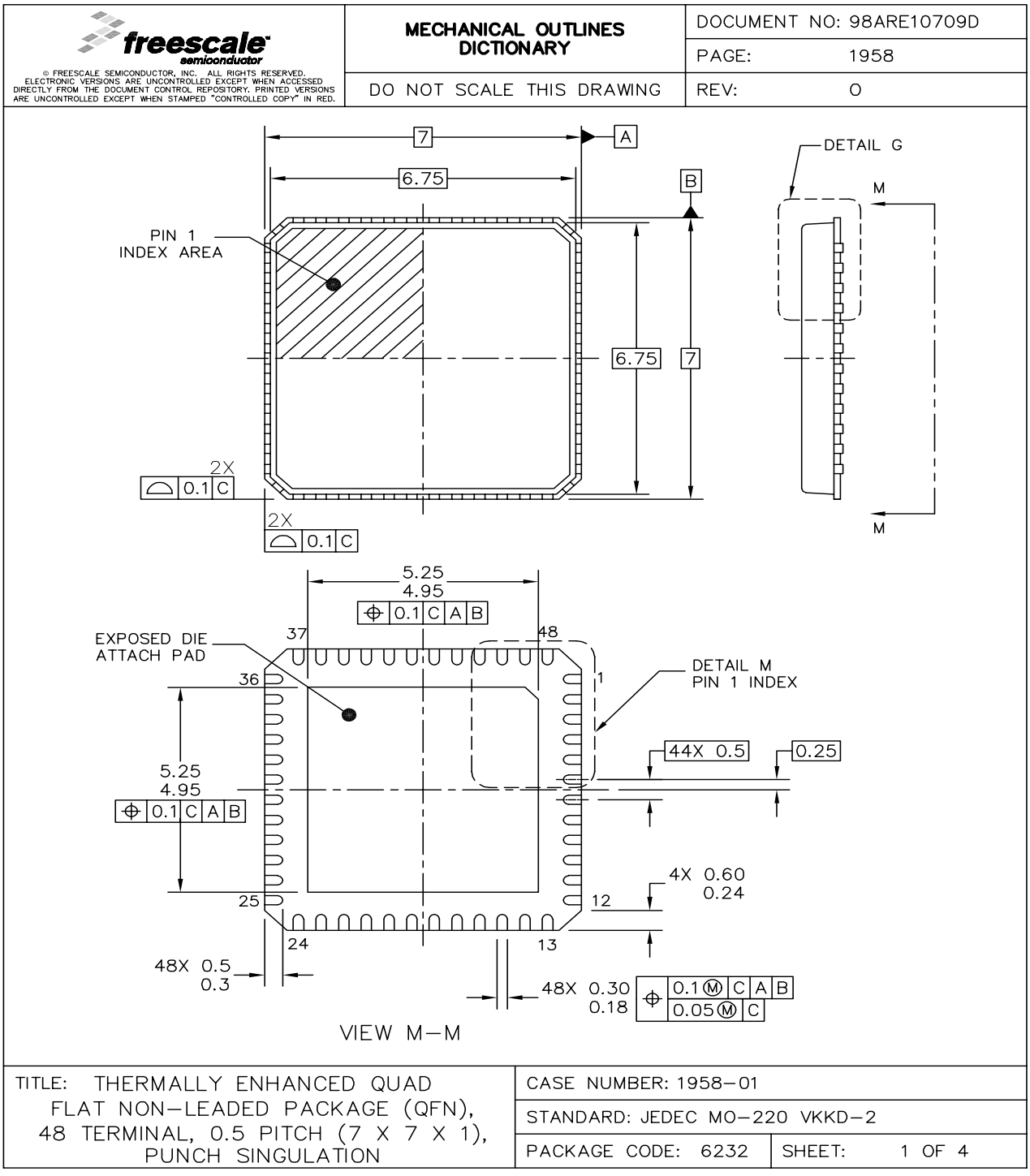

freescale semiconductor	MECHANICAL OUTLINES DICTIONARY	DOCUMENT NO: 98ARE10709D
		PAGE: 1958
	DO NOT SCALE THIS DRAWING	REV: O

© FREESCALE SEMICONDUCTOR, INC. ALL RIGHTS RESERVED.
ELECTRONIC VERSIONS ARE UNCONTROLLED EXCEPT WHEN ACCESSED DIRECTLY FROM THE DOCUMENT CONTROL REPOSITORY. PRINTED VERSIONS ARE UNCONTROLLED EXCEPT WHEN STAMPED "CONTROLLED COPY" IN RED.

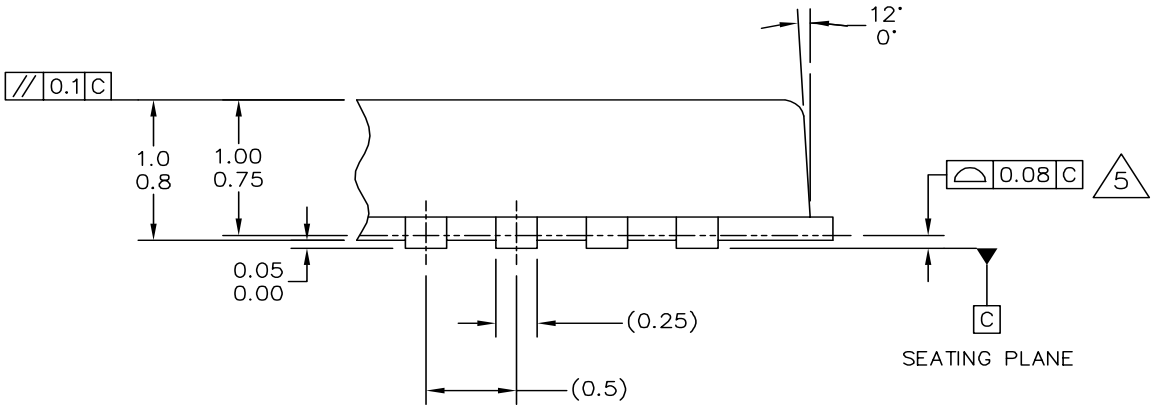

DETAIL G
VIEW ROTATED 90° CW

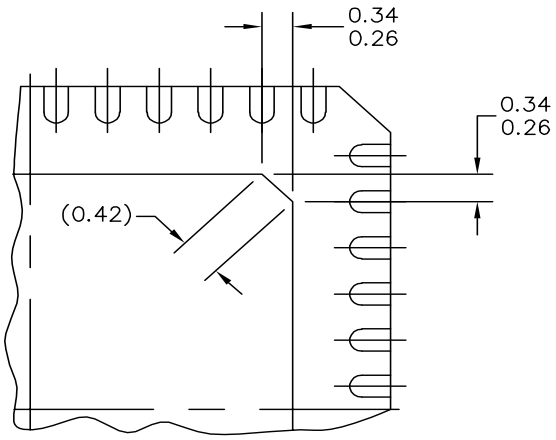

DETAIL M
BACKSIDE PIN 1 INDEX

TITLE: THERMALLY ENHANCED QUAD FLAT NON–LEADED PACKAGE (QFN), 48 TERMINAL, 0.5 PITCH (7 X 7 X 1), PUNCH SINGULATION	CASE NUMBER: 1958–01	
	STANDARD: JEDEC MO–220 VKKD–2	
	PACKAGE CODE: 6232	SHEET: 2 OF 4

freescale semiconductor	MECHANICAL OUTLINES DICTIONARY	DOCUMENT NO: 98ARE10709D
		PAGE: 1958
	DO NOT SCALE THIS DRAWING	REV: O

© FREESCALE SEMICONDUCTOR, INC. ALL RIGHTS RESERVED.
ELECTRONIC VERSIONS ARE UNCONTROLLED EXCEPT WHEN ACCESSED DIRECTLY FROM THE DOCUMENT CONTROL REPOSITORY. PRINTED VERSIONS ARE UNCONTROLLED EXCEPT WHEN STAMPED "CONTROLLED COPY" IN RED.

NOTES:

1. ALL DIMENSIONS ARE IN MILLIMETERS.
2. DIMENSIONING AND TOLERANCING PER ASME Y14.5M–1994.
3. THE COMPLETE JEDEC DESIGNATOR FOR THIS PACKAGE IS: HF–PQFN.
4. MOLD SURFACE ROUGHNESS IS 0.8~1.0m(Ra).
5. COPLANARITY APPLIES TO LEADS AND DIE ATTACH PAD.
6. FOR ANVIL SINGULATED QFN PACKAGES, MAXIMUM DRAFT ANGLE IS 12°.
7. MIN METAL GAP SHOULD BE 0.25MM.

TITLE: THERMALLY ENHANCED QUAD FLAT NON–LEADED PACKAGE (QFN), 48 TERMINAL, 0.5 PITCH (7 X 7 X 1), PUNCH SINGULATION	CASE NUMBER: 1958–01	
	STANDARD: JEDEC MO–220 VKKD–2	
	PACKAGE CODE: 6232	SHEET: 3 OF 4

C.3 64 LQFP Package Mechanical Outline

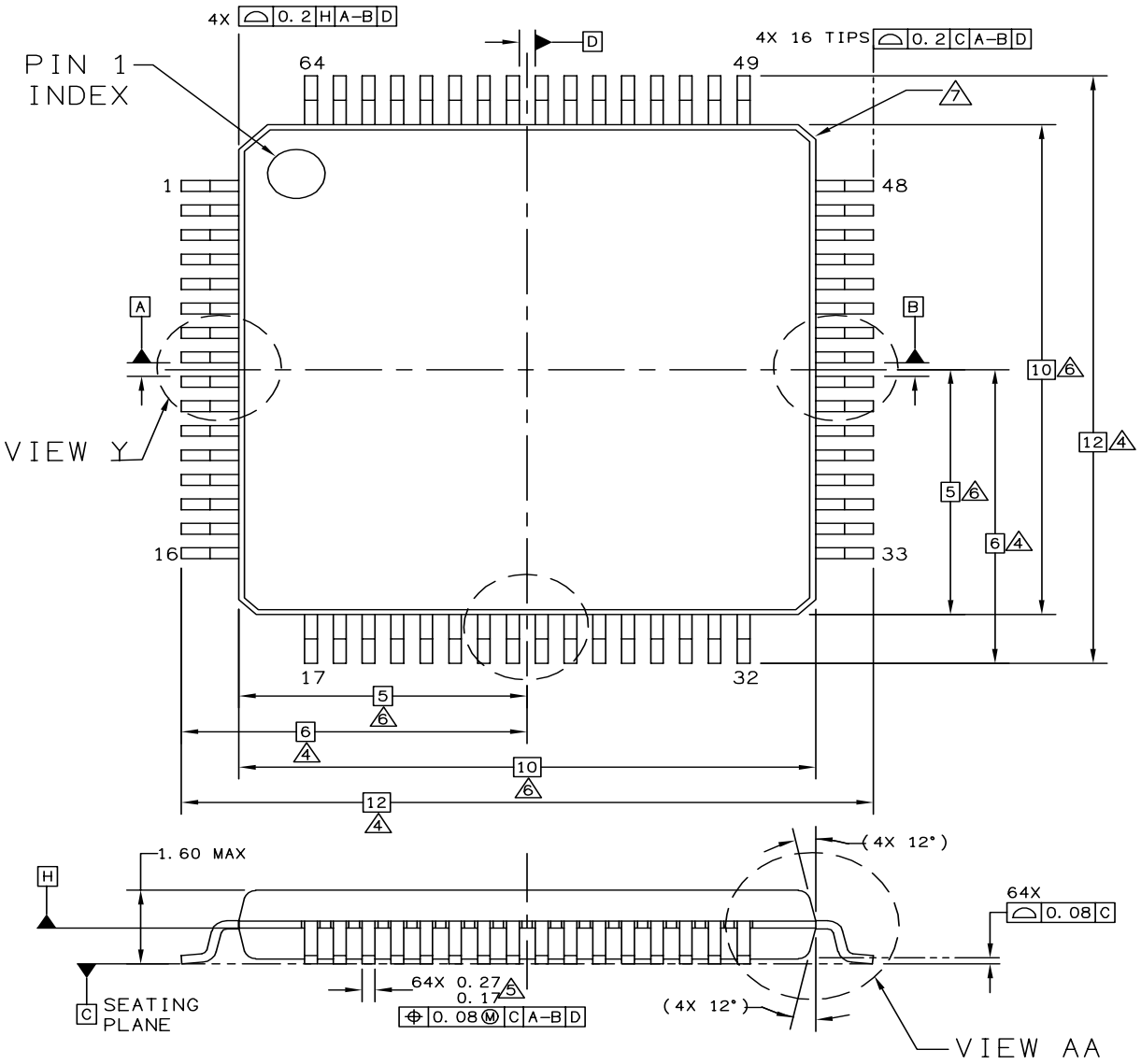

© FREESCALE SEMICONDUCTOR, INC. ALL RIGHTS RESERVED.	MECHANICAL OUTLINE	PRINT VERSION NOT TO SCALE
TITLE: 64LD LQFP, 10 X 10 X 1.4 PKG, 0.5 PITCH, CASE OUTLINE	DOCUMENT NO: 98ASS23234W	REV: E
	CASE NUMBER: 840F-02	11 AUG 2006
	STANDARD: JEDEC MS-026 BCD	

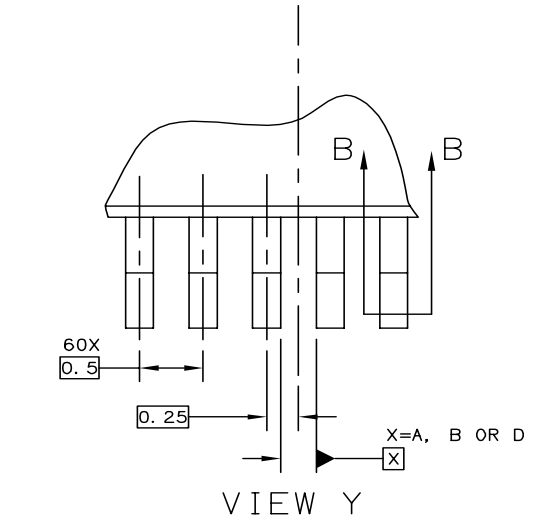

VIEW Y

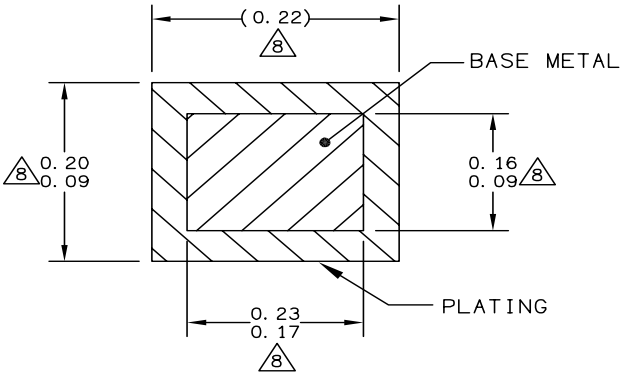

SECTION B–B

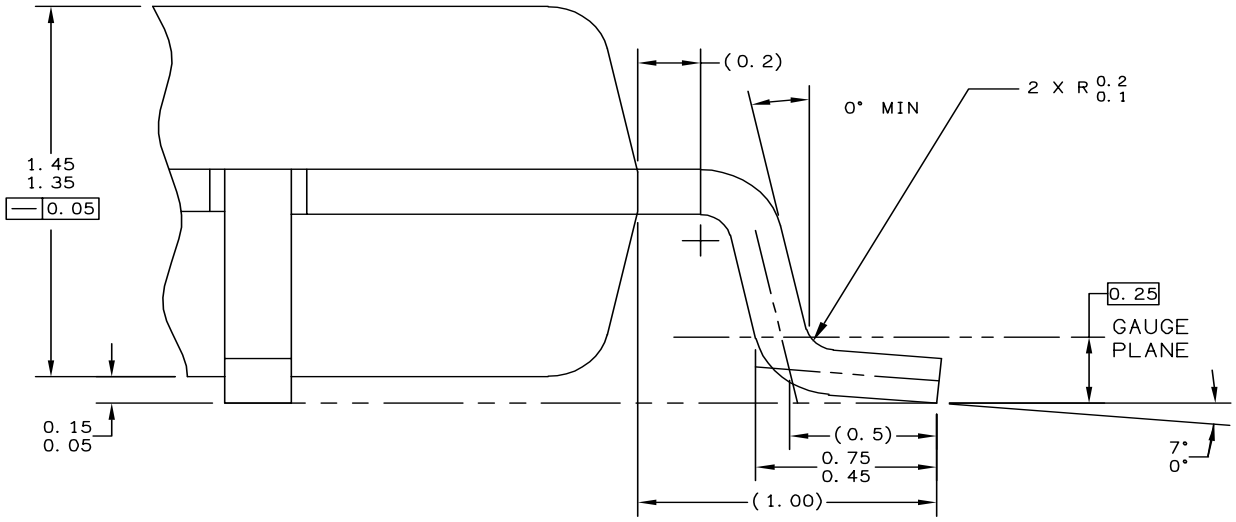

VIEW AA

© FREESCALE SEMICONDUCTOR, INC. ALL RIGHTS RESERVED.	**MECHANICAL OUTLINE**	PRINT VERSION NOT TO SCALE
TITLE: 64LD LQFP, 10 X 10 X 1.4 PKG, 0.5 PITCH, CASE OUTLINE	DOCUMENT NO: 98ASS23234W	REV: E
	CASE NUMBER: 840F-02	11 AUG 2006
	STANDARD: JEDEC MS-026 BCD	

NOTES:

1. DIMENSIONS ARE IN MILLIMETERS.
2. DIMENSIONING AND TOLERANCING PER ASME Y14.5M–1994.
3. DATUMS A, B AND D TO BE DETERMINED AT DATUM PLANE H.
4. DIMENSIONS TO BE DETERMINED AT SEATING PLANE C.
5. THIS DIMENSION DOES NOT INCLUDE DAMBAR PROTRUSION. ALLOWABLE DAMBAR PROTRUSION SHALL NOT CAUSE THE LEAD WIDTH TO EXCEED THE UPPER LIMIT BY MORE THAN 0.08 mm AT MAXIMUM MATERIAL CONDITION. DAMBAR CANNOT BE LOCATED ON THE LOWER RADIUS OR THE FOOT. MINIMUM SPACE BETWEEN PROTRUSION AND ADJACENT LEAD SHALL NOT BE LESS THAN 0.07 mm.
6. THIS DIMENSION DOES NOT INCLUDE MOLD PROTRUSION. ALLOWABLE PROTRUSION IS 0.25 mm PER SIDE. THIS DIMENSION IS MAXIMUM PLASTIC BODY SIZE DIMENSION INCLUDING MOLD MISMATCH.
7. EXACT SHAPE OF EACH CORNER IS OPTIONAL.
8. THESE DIMENSIONS APPLY TO THE FLAT SECTION OF THE LEAD BETWEEN 0.1 mm AND 0.25 mm FROM THE LEAD TIP.

© FREESCALE SEMICONDUCTOR, INC. ALL RIGHTS RESERVED.	**MECHANICAL OUTLINE**	PRINT VERSION NOT TO SCALE	
TITLE: 64LD LQFP, 10 X 10 X 1.4 PKG, 0.5 PITCH, CASE OUTLINE	DOCUMENT NO: 98ASS23234W		REV: E
	CASE NUMBER: 840F–02		11 AUG 2006
	STANDARD: JEDEC MS–026 BCD		

Appendix D
Detailed Register Address Map

D.1 Detailed Register Map

The following tables show the detailed register map of the MC9S12P-Family.

0x0000-0x0009 Port Integration Module (PIM) Map 1 of 4

Address	Name		Bit 7	Bit 6	Bit 5	Bit 4	Bit 3	Bit 2	Bit 1	Bit 0
0x0000	PORTA	R	PA7	PA6	PA5	PA4	PA3	PA2	PA1	PA0
		W								
0x0001	PORTB	R	PB7	PB6	PB5	PB4	PB3	PB2	PB1	PB0
		W								
0x0002	DDRA	R	DDRA7	DDRA6	DDRA5	DDRA4	DDRA3	DDRA2	DDRA1	DDRA0
		W								
0x0003	DDRB	R	DDRB7	DDRB6	DDRB5	DDRB4	DDRB3	DDRB2	DDRB1	DDRB0
		W								
0x0004	Reserved	R	0	0	0	0	0	0	0	0
		W								
0x0005	Reserved	R	0	0	0	0	0	0	0	0
		W								
0x0006	Reserved	R	0	0	0	0	0	0	0	0
		W								
0x0007	Reserved	R	0	0	0	0	0	0	0	0
		W								
0x0008	PORTE	R	PE7	PE6	PE5	PE4	PE3	PE2	PE1	PE0
		W								
0x0009	DDRE	R	DDRE7	DDRE6	DDRE5	DDRE4	DDRE3	DDRE2	0	0
		W								

0x000A-0x000B Module Mapping Conrol (MMC) Map 1 of 2

Address	Name		Bit 7	Bit 6	Bit 5	Bit 4	Bit 3	Bit 2	Bit 1	Bit 0
0x000A	Reserved	R	0	0	0	0	0	0	0	0
		W								
0x000B	MODE	R	MODC	0	0	0	0	0	0	0
		W								

0x000C-0x000D Port Integration Module (PIM) Map 2 of 4

Address	Name		Bit 7	Bit 6	Bit 5	Bit 4	Bit 3	Bit 2	Bit 1	Bit 0
0x000C	PUCR	R	0	BKPUE	0	PUPEE	0	0	PUPBE	PUPAE
		W								
0x000D	RDRIV	R	0	0	0	RDPE	0	0	RDPB	RDPA
		W								

0x000E-0x000F Reserved

Address	Name		Bit 7	Bit 6	Bit 5	Bit 4	Bit 3	Bit 2	Bit 1	Bit 0
0x000E	Reserved	R	0	0	0	0	0	0	0	0
		W								
0x000F	Reserved	R	0	0	0	0	0	0	0	0
		W								

0x0010-0x0017 Module Mapping Control (MMC) Map 2 of 2

Address	Name		Bit 7	Bit 6	Bit 5	Bit 4	Bit 3	Bit 2	Bit 1	Bit 0
0x0010	Reserved	R	0	0	0	0	0	0	0	0
		W								
0x0011	DIRECT	R	DP15	DP14	DP13	DP12	DP11	DP10	DP9	DP8
		W								
0x0012	Reserved	R	0	0	0	0	0	0	0	0
		W								
0x0013	Reserved	R	0	0	0	0	0	0	0	0
		W								
0x0014	Reserved	R	0	0	0	0	0	0	0	0
		W								
0x0015	PPAGE	R	PIX7	PIX6	PIX5	PIX4	PIX3	PIX2	PIX1	PIX0
		W								
0x0016	Reserved	R	0	0	0	0	0	0	0	0
		W								
0x0017	Reserved	R	0	0	0	0	0	0	0	0
		W								

0x0018-0x0019 Reserved

Address	Name		Bit 7	Bit 6	Bit 5	Bit 4	Bit 3	Bit 2	Bit 1	Bit 0
0x0018	Reserved	R	0	0	0	0	0	0	0	0
		W								
0x0019	Reserved	R	0	0	0	0	0	0	0	0
		W								

0x001A-0x001B Part ID Registers

Address	Name		Bit 7	Bit 6	Bit 5	Bit 4	Bit 3	Bit 2	Bit 1	Bit 0
0x001A	PARTIDH	R	PARTIDH							
		W								
0x001B	PARTIDL	R	PARTIDL							
		W								

0x001C-0x001F Port Intergartion Module (PIM) Map 3 of 4

Address	Name		Bit 7	Bit 6	Bit 5	Bit 4	Bit 3	Bit 2	Bit 1	Bit 0
0x001C	ECLKCTL	R	NECLK	NCLKX2	DIV16	EDIV4	EDIV3	EDIV2	EDIV1	EDIV0
		W								
0x001D	Reserved	R	0	0	0	0	0	0	0	0
		W								
0x001E	IRQCR	R	IRQE	IRQEN	0	0	0	0	0	0
		W								
0x001F	Reserved	R	0	0	0	0	0	0	0	0
		W								

0x0020-0x002F Debug Module (S12SDBG) Map

Address	Name		Bit 7	Bit 6	Bit 5	Bit 4	Bit 3	Bit 2	Bit 1	Bit 0
0x0020	DBGC1	R	ARM	0	0	BDM	DBGBRK	0	COMRV	
		W		TRIG						
0x0021	DBGSR	R	TBF	0	0	0	0	SSF2	SSF1	SSF0
		W								
0x0022	DBGTCR	R	0	TSOURCE	0	0	TRCMOD		0	TALIGN
		W								
0x0023	DBGC2	R	0	0	0	0	0	0	ABCM	
		W								
0x0024	DBGTBH	R	Bit 15	Bit 14	Bit 13	Bit 12	Bit 11	Bit 10	Bit 9	Bit 8
		W								
0x0025	DBGTBL	R	Bit 7	Bit 6	Bit 5	Bit 4	Bit 3	Bit 2	Bit 1	Bit 0
		W								
0x0026	DBGCNT	R	TBF	0	CNT					
		W								
0x0027	DBGSCRX	R	0	0	0	0	SC3	SC2	SC1	SC0
		W								
0x0027	DBGMFR	R	0	0	0	0	0	MC2	MC1	MC0
		W								
0x0028 (1)	DBGACTL	R	SZE	SZ	TAG	BRK	RW	RWE	0	COMPE
		W								
0x0028 (2)	DBGBCTL	R	SZE	SZ	TAG	BRK	RW	RWE	0	COMPE
		W								

0x0020-0x002F Debug Module (S12SDBG) Map

Address	Name		Bit 7	Bit 6	Bit 5	Bit 4	Bit 3	Bit 2	Bit 1	Bit 0
0x0028 (3)	DBGCCTL	R	0	0	TAG	BRK	RW	RWE	0	COMPE
		W								
0x0029	DBGXAH	R	0	0	0	0	0	0	17	Bit 16
		W								
0x002A	DBGXAM	R	Bit 15	14	13	12	11	10	9	Bit 8
		W								
0x002B	DBGXAL	R	Bit 7	6	5	4	3	2	1	Bit 0
		W								
0x002C	DBGADH	R	Bit 15	14	13	12	11	10	9	Bit 8
		W								
0x002D	DBGADL	R	Bit 7	6	5	4	3	2	1	Bit 0
		W								
0x002E	DBGADHM	R	Bit 15	14	13	12	11	10	9	Bit 8
		W								
0x002F	DBGADLM	R	Bit 7	6	5	4	3	2	1	Bit 0
		W								

1. This represents the contents if the Comparator A or C control register is blended into this address
2. This represents the contents if the Comparator B or D control register is blended into this address
3. This represents the contents if the Comparator B or D control register is blended into this address

0x0030-0x0033 Reserved

Address	Name		Bit 7	Bit 6	Bit 5	Bit 4	Bit 3	Bit 2	Bit 1	Bit 0
0x0030	Reserved	R	0	0	0	0	0	0	0	0
		W								
0x0031	Reserved	R	0	0	0	0	0	0	0	0
		W								
0x0032	Reserved	R	0	0	0	0	0	0	0	0
		W								
0x0033	Reserved	R	0	0	0	0	0	0	0	0
		W								

0x0034-0x003F Clock Reset and Power Management (CPMU) Map

Address	Name		Bit 7	Bit 6	Bit 5	Bit 4	Bit 3	Bit 2	Bit 1	Bit 0
0x0034	CPMUSYNR	R	VCOFRQ[1:0]		SYNDIV[5:0]					
		W								
0x0035	CPMUREFDIV	R	REFFRQ[1:0]		0	0	REFDIV[3:0]			
		W								
0x0036	CPMUPOSTDIV	R	0	0	0	POSTDIV[4:0]				
		W								
0x0037	CPMUFLG	R	RTIF	PORF	LVRF	LOCKIF	LOCK	ILAF	OSCIF	UPOSC
		W								

0x0034-0x003F Clock Reset and Power Management (CPMU) Map

Address	Name		Bit 7	Bit 6	Bit 5	Bit 4	Bit 3	Bit 2	Bit 1	Bit 0
0x0038	CPMUINT	R	RTIE	0	0	LOCKIE	0	0	OSCIE	0
		W								
0x0039	CPMUCLKS	R	PLLSEL	PSTP	0	0	PRE	PCE	RTIOSCSEL	COPOSCSEL
		W								
0x003A	CPMUPLL	R	0	0	FM1	FM0	0	0	0	0
		W								
0x003B	CPMURTI	R	RTDEC	RTR6	RTR5	RTR4	RTR3	RTR2	RTR1	RTR0
		W								
0x003C	CPMUCOP	R	WCOP	RSBCK	0	0	0	CR2	CR1	CR0
		W			WRTMASK					
0x003D	Reserved	R	0	0	0	0	0	0	0	0
		W	Reserved For Factory Test							
0x003E	Reserved	R	0	0	0	0		0	0	0
		W	Reserved For Factory Test							
0x003F	CPMU ARMCOP	R	0	0	0	0	0	0	0	0
		W	Bit 7	6	5	4	3	2	1	Bit 0

0x0040-0x006F Timer Module (TIM) Map

Address	Name		Bit 7	Bit 6	Bit 5	Bit 4	Bit 3	Bit 2	Bit 1	Bit 0
0x0040	TIOS	R	IOS7	IOS6	IOS5	IOS4	IOS3	IOS2	IOS1	IOS0
		W								
0x0041	CFORC	R	0	0	0	0	0	0	0	0
		W	FOC7	FOC6	FOC5	FOC4	FOC3	FOC2	FOC1	FOC0
0x0042	OC7M	R	OC7M7	OC7M6	OC7M5	OC7M4	OC7M3	OC7M2	OC7M1	OC7M0
		W								
0x0043	OC7D	R	OC7D7	OC7D6	OC7D5	OC7D4	OC7D3	OC7D2	OC7D1	OC7D0
		W								
0x0044	TCNTH	R	Bit 15	14	13	12	11	10	9	Bit 8
		W								
0x0045	TCNTL	R	Bit 7	6	5	4	3	2	1	Bit 0
		W								
0x0046	TSCR1	R	TEN	TSWAI	TSFRZ	TFFCA	PRNT	0	0	0
		W								
0x0047	TTOV	R	TOV7	TOV6	TOV5	TOV4	TOV3	TOV2	TOV1	TOV0
		W								
0x0048	TCTL1	R	OM7	OL7	OM6	OL6	OM5	OL5	OM4	OL4
		W								
0x0049	TCTL2	R	OM3	OL3	OM2	OL2	OM1	OL1	OM0	OL0
		W								
0x004A	TCTL3	R	EDG7B	EDG7A	EDG6B	EDG6A	EDG5B	EDG5A	EDG4B	EDG4A
		W								
0x004B	TCTL4	R	EDG3B	EDG3A	EDG2B	EDG2A	EDG1B	EDG1A	EDG0B	EDG0A
		W								

0x0040-0x006F Timer Module (TIM) Map

Address	Name		Bit 7	Bit 6	Bit 5	Bit 4	Bit 3	Bit 2	Bit 1	Bit 0
0x004C	TIE	R W	C7I	C6I	C5I	C4I	C3I	C2I	C1I	C0I
0x004D	TSCR2	R W	TOI	0	0	0	TCRE	PR2	PR1	PR0
0x004E	TFLG1	R W	C7F	C6F	C5F	C4F	C3F	C2F	C1F	C0F
0x004F	TFLG2	R W	TOF	0	0	0	0	0	0	0
0x0050	TC0H	R W	Bit 15	Bit 14	Bit 13	Bit 12	Bit 11	Bit 10	Bit 9	Bit 8
0x0051	TC0L	R W	Bit 7	Bit 6	Bit 5	Bit 4	Bit 3	Bit 2	Bit 1	Bit 0
0x0052	TC1H	R W	Bit 15	Bit 14	Bit 13	Bit 12	Bit 11	Bit 10	Bit 9	Bit 8
0x0053	TC1L	R W	Bit 7	Bit 6	Bit 5	Bit 4	Bit 3	Bit 2	Bit 1	Bit 0
0x0054	TC2H	R W	Bit 15	Bit 14	Bit 13	Bit 12	Bit 11	Bit 10	Bit 9	Bit 8
0x0055	TC2L	R W	Bit 7	Bit 6	Bit 5	Bit 4	Bit 3	Bit 2	Bit 1	Bit 0
0x0056	TC3H	R W	Bit 15	Bit 14	Bit 13	Bit 12	Bit 11	Bit 10	Bit 9	Bit 8
0x0057	TC3L	R W	Bit 7	Bit 6	Bit 5	Bit 4	Bit 3	Bit 2	Bit 1	Bit 0
0x0058	TC4H	R W	Bit 15	Bit 14	Bit 13	Bit 12	Bit 11	Bit 10	Bit 9	Bit 8
0x0059	TC4L	R W	Bit 7	Bit 6	Bit 5	Bit 4	Bit 3	Bit 2	Bit 1	Bit 0
0x005A	TC5H	R W	Bit 15	Bit 14	Bit 13	Bit 12	Bit 11	Bit 10	Bit 9	Bit 8
0x005B	TC5L	R W	Bit 7	Bit 6	Bit 5	Bit 4	Bit 3	Bit 2	Bit 1	Bit 0
0x005C	TC6H	R W	Bit 15	Bit 14	Bit 13	Bit 12	Bit 11	Bit 10	Bit 9	Bit 8
0x005D	TC6L	R W	Bit 7	Bit 6	Bit 5	Bit 4	Bit 3	Bit 2	Bit 1	Bit 0
0x005E	TC7H	R W	Bit 15	Bit 14	Bit 13	Bit 12	Bit 11	Bit 10	Bit 9	Bit 8
0x005F	TC7L	R W	Bit 7	Bit 6	Bit 5	Bit 4	Bit 3	Bit 2	Bit 1	Bit 0
0x0060	PACTL	R W	0	PAEN	PAMOD	PEDGE	CLK1	CLK0	PAOVI	PAI
0x0061	PAFLG	R W	0	0	0	0	0	0	PAOVF	PAIF
0x0062	PACNTH	R W	PACNT15	PACNT14	PACNT13	PACNT12	PACNT11	PACNT10	PACNT9	PACNT8

0x0040-0x006F Timer Module (TIM) Map

Address	Name		Bit 7	Bit 6	Bit 5	Bit 4	Bit 3	Bit 2	Bit 1	Bit 0
0x0063	PACNTL	R	PACNT7	PACNT6	PACNT5	PACNT4	PACNT3	PACNT2	PACNT1	PACNT0
		W								
0x0064–0x006B	Reserved	R	0	0	0	0	0	0	0	0
		W								
0x006C	OCPD	R	OCPD7	OCPD6	OCPD5	OCPD4	OCPD3	OCPD2	OCPD1	OCPD0
		W								
0x006D	Reserved	R								
		W								
0x006E	PTPSR	R	PTPS7	PTPS6	PTPS5	PTPS4	PTPS3	PTPS2	PTPS1	PTPS0
		W								
0x006F	Reserved	R	0	0	0	0	0	0	0	0
		W								

0x0070-0x009F Analog to Digital Converter 12-Bit 10-Channel (ATD) Map

Address	Name		Bit 7	Bit 6	Bit 5	Bit 4	Bit 3	Bit 2	Bit 1	Bit 0
0x0070	ATDCTL0	R	0	0	0	0	WRAP3	WRAP2	WRAP1	WRAP0
		W								
0x0071	ATDCTL1	R	ETRIG SEL	SRES1	SRES0	SMP_DIS	ETRIG CH3	ETRIG CH2	ETRIG CH1	ETRIG CH0
		W								
0x0072	ATDCTL2	R	0	AFFC	ICLKSTP	ETRIGLE	ETRIGP	ETRIGE	ASCIE	ACMPIE
		W								
0x0073	ATDCTL3	R	DJM	S8C	S4C	S2C	S1C	FIFO	FRZ1	FRZ0
		W								
0x0074	ATDCTL4	R	SMP2	SMP1	SMP0	PRS4	PRS3	PRS2	PRS1	PRS0
		W								
0x0075	ATDCTL5	R	0	SC	SCAN	MULT	CD	CC	CB	CA
		W								
0x0076	ATDSTAT0	R	SCF	0	ETORF	FIFOR	CC3	CC2	CC1	CC0
		W								
0x0077	Reserved	R	0	0	0	0	0	0	0	0
		W								
0x0078	ATDCMPEH	R	0	0	0	0	0	0	CMPE[9:8]	
		W								
0x0079	ATDCMPEL	R	CMPE[7:0]							
		W								
0x007A	ATDSTAT2H	R							CCF[9:8]	
		W								
0x007B	ATDSTAT2L	R	CCF[7:0]							
		W								
0x007C	ATDDIENH	R	0	0	0	0	0	0	IEN[9:8]	
		W								
0x007D	ATDDIENL	R	IEN[7:0]							
		W								

0x0070-0x009F Analog to Digital Converter 12-Bit 10-Channel (ATD) Map

Address	Name		Bit 7	Bit 6	Bit 5	Bit 4	Bit 3	Bit 2	Bit 1	Bit 0
0x007E	ATDCMPHTH	R	0	0	0	0	0	0	CMPHT[9:8]	
		W								
0x007F	ATDCMPHTL	R	CMPHT[7:0]							
		W								
0x0080	ATDDR0H	R	Bit15	14	13	12	11	10	9	Bit8
		W								
0x0081	ATDDR0L	R	Bit7	Bit6	0	0	0	0	0	0
		W								
0x0082	ATDDR1H	R	Bit15	14	13	12	11	10	9	Bit8
		W								
0x0083	ATDDR1L	R	Bit7	Bit6	0	0	0	0	0	0
		W								
0x0084	ATDDR2H	R	Bit15	14	13	12	11	10	9	Bit8
		W								
0x0085	ATDDR2L	R	Bit7	Bit6	0	0	0	0	0	0
		W								
0x0086	ATDDR3H	R	Bit15	14	13	12	11	10	9	Bit8
		W								
0x0087	ATDDR3L	R	Bit7	Bit6	0	0	0	0	0	0
		W								
0x0088	ATDDR4H	R	Bit15	14	13	12	11	10	9	Bit8
		W								
0x0089	ATDDR4L	R	Bit7	Bit6	0	0	0	0	0	0
		W								
0x008A	ATDDR5H	R	Bit15	14	13	12	11	10	9	Bit8
		W								
0x008B	ATDDR5L	R	Bit7	Bit6	0	0	0	0	0	0
		W								
0x008C	ATDDR6H	R	Bit15	14	13	12	11	10	9	Bit8
		W								
0x008D	ATDDR6L	R	Bit7	Bit6	0	0	0	0	0	0
		W								
0x008E	ATDDR7H	R	Bit15	14	13	12	11	10	9	Bit8
		W								
0x008F	ATDDR7L	R	Bit7	Bit6	0	0	0	0	0	0
		W								
0x090	ATDDR8H	R	Bit15	14	13	12	11	10	9	Bit8
		W								
0x091	ATDDR8L	R	Bit7	Bit6	0	0	0	0	0	0
		W								
0x092	ATDDR9H	R	Bit15	14	13	12	11	10	9	Bit8
		W								
0x093	ATDDR9L	R	Bit7	Bit6	0	0	0	0	0	0
		W								
0x094	ATDDR10H	R	Bit15	14	13	12	11	10	9	Bit8
		W								

0x0070-0x009F Analog to Digital Converter 12-Bit 10-Channel (ATD) Map

Address	Name		Bit 7	Bit 6	Bit 5	Bit 4	Bit 3	Bit 2	Bit 1	Bit 0
0x095	ATDDR10L	R	Bit7	Bit6	0	0	0	0	0	0
		W								
0x096	ATDDR11H	R	Bit15	14	13	12	11	10	9	Bit8
		W								
0x097	ATDDR11L	R	Bit7	Bit6	0	0	0	0	0	0
		W								
0x098	ATDDR12H	R	Bit15	14	13	12	11	10	9	Bit8
		W								
0x099	ATDDR12L	R	Bit7	Bit6	0	0	0	0	0	0
		W								
0x09A	ATDDR13H	R	Bit15	14	13	12	11	10	9	Bit8
		W								
0x09B	ATDDR13L	R	Bit7	Bit6	0	0	0	0	0	0
		W								
0x09C	ATDDR14H	R	Bit15	14	13	12	11	10	9	Bit8
		W								
0x09D	ATDDR14L	R	Bit7	Bit6	0	0	0	0	0	0
		W								
0x09E	ATDDR15H	R	Bit15	14	13	12	11	10	9	Bit8
		W								
0x009F	ATDDR15L	R	Bit7	Bit6	0	0	0	0	0	0
		W								

0x00A0-0x00C7 Pulse Width Modulator 6-Channels (PWM) Map

Address	Name		Bit 7	Bit 6	Bit 5	Bit 4	Bit 3	Bit 2	Bit 1	Bit 0
0x00A0	PWME	R	0	0	PWME5	PWME4	PWME3	PWME2	PWME1	PWME0
		W								
0x00A1	PWMPOL	R		0	PPOL5	PPOL4	PPOL3	PPOL2	PPOL1	PPOL0
		W								
0x00A2	PWMCLK	R	0	0	PCLK5	PCLK4	PCLK3	PCLK2	PCLK1	PCLK0
		W								
0x00A3	PWMPRCLK	R	0	PCKB2	PCKB1	PCKB0	0	PCKA2	PCKA1	PCKA0
		W								
0x00A4	PWMCAE	R	0	0	CAE5	CAE4	CAE3	CAE2	CAE1	CAE0
		W								
0x00A5	PWMCTL	R	0	CON45	CON23	CON01	PSWAI	PFRZ	0	0
		W								
0x00A6	PWMTST Test Only	R	0	0	0	0	0	0	0	0
		W								
0x00A7	PWMPRSC	R	0	0	0	0	0	0	0	0
		W								
0x00A8	PWMSCLA	R	Bit 7	6	5	4	3	2	1	Bit 0
		W								

0x00A0-0x00C7 Pulse Width Modulator 6-Channels (PWM) Map

Address	Name		Bit 7	Bit 6	Bit 5	Bit 4	Bit 3	Bit 2	Bit 1	Bit 0
0x00A9	PWMSCLB	R	Bit 7	6	5	4	3	2	1	Bit 0
		W								
0x00AA	PWMSCNTA	R	0	0	0	0	0	0	0	0
		W								
0x00AB	PWMSCNTB	R	0	0	0	0	0	0	0	0
		W								
0x00AC	PWMCNT0	R	Bit 7	6	5	4	3	2	1	Bit 0
		W	0	0	0	0	0	0	0	0
0x00AD	PWMCNT1	R	Bit 7	6	5	4	3	2	1	Bit 0
		W	0	0	0	0	0	0	0	0
0x00AE	PWMCNT2	R	Bit 7	6	5	4	3	2	1	Bit 0
		W	0	0	0	0	0	0	0	0
0x00AF	PWMCNT3	R	Bit 7	6	5	4	3	2	1	Bit 0
		W	0	0	0	0	0	0	0	0
0x00B0	PWMCNT4	R	Bit 7	6	5	4	3	2	1	Bit 0
		W	0	0	0	0	0	0	0	0
0x00B1	PWMCNT5	R	Bit 7	6	5	4	3	2	1	Bit 0
		W	0	0	0	0	0	0	0	0
0x00B2	PWMPER0	R	Bit 7	6	5	4	3	2	1	Bit 0
		W								
0x00B3	PWMPER1	R	Bit 7	6	5	4	3	2	1	Bit 0
		W								
0x00B4	PWMPER2	R	Bit 7	6	5	4	3	2	1	Bit 0
		W								
0x00B5	PWMPER3	R	Bit 7	6	5	4	3	2	1	Bit 0
		W								
0x00B6	PWMPER4	R	Bit 7	6	5	4	3	2	1	Bit 0
		W								
0x00B7	PWMPER5	R	Bit 7	6	5	4	3	2	1	Bit 0
		W								
0x00B8	PWMDTY0	R	Bit 7	6	5	4	3	2	1	Bit 0
		W								
0x00B9	PWMDTY1	R	Bit 7	6	5	4	3	2	1	Bit 0
		W								
0x00BA	PWMDTY2	R	Bit 7	6	5	4	3	2	1	Bit 0
		W								
0x00BB	PWMDTY3	R	Bit 7	6	5	4	3	2	1	Bit 0
		W								
0x00BC	PWMDTY4	R	Bit 7	6	5	4	3	2	1	Bit 0
		W								
0x00BD	PWMDTY5	R	Bit 7	6	5	4	3	2	1	Bit 0
		W								
0x00BE	PWMSDN	R	PWMIF	PWMIE	0	PWMLVL	0	PWM5IN	PWM5INL	PWM5 ENA
		W			PWRSTRT					
0x00BF-0x00C7	Reserved	R	0	0	0	0	0	0	0	0
		W								

0x00C8-0x00CF Serial Communication Interface (SCI) Map

Address	Name		Bit 7	Bit 6	Bit 5	Bit 4	Bit 3	Bit 2	Bit 1	Bit 0
0x00C8	SCIBDH(1)	R	IREN	TNP1	TNP0	SBR12	SBR11	SBR10	SBR9	SBR8
		W								
0x00C9	SCIBDL1	R	SBR7	SBR6	SBR5	SBR4	SBR3	SBR2	SBR1	SBR0
		W								
0x00CA	SCICR11	R	LOOPS	SCISWAI	RSRC	M	WAKE	ILT	PE	PT
		W								
0x00C8	SCIASR1(2)	R	RXEDGIF	0	0	0	0	BERRV	BERRIF	BKDIF
		W								
0x00C9	SCIACR12	R	RXEDGIE	0	0	0	0	0	BERRIE	BKDIE
		W								
0x00CA	SCIACR22	R	0	0	0	0	0	BERRM1	BERRM0	BKDFE
		W								
0x00CB	SCICR2	R	TIE	TCIE	RIE	ILIE	TE	RE	RWU	SBK
		W								
0x00CC	SCISR1	R	TDRE	TC	RDRF	IDLE	OR	NF	FE	PF
		W								
0x00CD	SCISR2	R	AMAP	0	0	TXPOL	RXPOL	BRK13	TXDIR	RAF
		W								
0x00CE	SCIDRH	R	R8	T8	0	0	0	0	0	0
		W								
0x00CF	SCIDRL	R	R7	R6	R5	R4	R3	R2	R1	R0
		W	T7	T6	T5	T4	T3	T2	T1	T0

1. Those registers are accessible if the AMAP bit in the SCI0SR2 register is set to zero
2. Those registers are accessible if the AMAP bit in the SCI0SR2 register is set to one

0x00D0-0x00D7 Reserved

Address	Name		Bit 7	Bit 6	Bit 5	Bit 4	Bit 3	Bit 2	Bit 1	Bit 0
0x00D0-0x00D7	Reseved	R	0	0	0	0	0	0	0	0
		W								

0x00D8-0x00DF Serial Peripheral Interface (SPI) Map

Address	Name		Bit 7	Bit 6	Bit 5	Bit 4	Bit 3	Bit 2	Bit 1	Bit 0
0x00D8	SPICR1	R	SPIE	SPE	SPTIE	MSTR	CPOL	CPHA	SSOE	LSBFE
		W								
0x00D9	SPICR2	R	0	XFRW	0	MODFEN	BIDIROE	0	SPISWAI	SPC0
		W								
0x00DA	SPIBR	R	0	SPPR2	SPPR1	SPPR0	0	SPR2	SPR1	SPR0
		W								
0x00DB	SPISR	R	SPIF	0	SPTEF	MODF	0	0	0	0
		W								

0x00D8-0x00DF Serial Peripheral Interface (SPI) Map

Address	Name		Bit 7	Bit 6	Bit 5	Bit 4	Bit 3	Bit 2	Bit 1	Bit 0
0x00DC	SPIDRH	R	R15	R14	R13	R12	R11	R10	R9	R8
		W	T15	T14	T13	T12	T11	T10	T9	T8
0x00DD	SPI0DRL	R	R7	R6	R5	R4	R3	R2	R1	R0
		W	T7	T6	T5	T4	T3	T2	T1	T0
0x00DE	Reserved	R	0	0	0	0	0	0	0	0
		W								
0x00DF	Reserved	R	0	0	0	0	0	0	0	0
		W								

0x00E0-0x00FF Reserved

Address	Name		Bit 7	Bit 6	Bit 5	Bit 4	Bit 3	Bit 2	Bit 1	Bit 0
0x00E0-0x00FF	Reserved	R	0	0	0	0	0	0	0	0
		W								

0x0100-0x0113 NVM Contol Register (FTMRC) Map

Address	Name		Bit 7	Bit 6	Bit 5	Bit 4	Bit 3	Bit 2	Bit 1	Bit 0
0x0100	FCLKDIV	R	FDIVLD	FDIV6	FDIV5	FDIV4	FDIV3	FDIV2	FDIV1	FDIV0
		W								
0x0101	FSEC	R	KEYEN1	KEYEN0	RNV5	RNV4	RNV3	RNV2	SEC1	SEC0
		W								
0x0102	FCCOBIX	R	0	0	0	0	0	CCOBIX2	CCOBIX1	CCOBIX0
		W								
0x0103	FRSV0	R	0	0	0	0	0	0	0	0
		W								
0x0104	FCNFG	R	CCIE	0	0	IGNSF	0	0	FDFD	FSFD
		W								
0x0105	FERCNFG	R	0	0	0	0	0	0	DFDIE	SFDIE
		W								
0x0106	FSTAT	R	CCIF	0	ACCERR	FPVIOL	MGBUSY	RSVD	MGSTAT1	MGSTAT0
		W								
0x0107	FERSTAT	R	0	0	0	0	0	0	DFDIF	SFDIF
		W								
0x0108	FPROT	R	FPOPEN	RNV6	FPHDIS	FPHS1	FPHS0	FPLDIS	FPLS1	FPLS0
		W								
0x0109	DFPROT	R	DPOPEN	0	0	0	DPS3	DPS2	DPS1	DPS0
		W								
0x010A	FCCOBHI	R	CCOB15	CCOB14	CCOB13	CCOB12	CCOB11	CCOB10	CCOB9	CCOB8
		W								
0x010B	FCCOBLO	R	CCOB7	CCOB6	CCOB5	CCOB4	CCOB3	CCOB2	CCOB1	CCOB0
		W								
0x010C	FRSV1	R	0	0	0	0	0	0	0	0
		W								

0x0100-0x0113 NVM Contol Register (FTMRC) Map

Address	Name		Bit 7	Bit 6	Bit 5	Bit 4	Bit 3	Bit 2	Bit 1	Bit 0
0x010D	FRSV2	R	0	0	0	0	0	0	0	0
		W								
0x010E	FRSC3	R	0	0	0	0	0	0	0	0
		W								
0x010F	FRSV4	R	0	0	0	0	0	0	0	0
		W								
0x0110	FOPT	R	NV7	NV6	NV5	NV4	NV3	NV2	NV1	NV0
		W								
0x0111	FRSV5	R	0	0	0	0	0	0	0	0
		W								
0x0112	FRSV6	R	0	0	0	0	0	0	0	0
		W								
0x0113	FRSV7	R	0	0	0	0	0	0	0	0
		W								

0x0114-0x011F Reserved

Address	Name		Bit 7	Bit 6	Bit 5	Bit 4	Bit 3	Bit 2	Bit 1	Bit 0
0x0114-0x011F	Reserved	R	0	0	0	0	0	0	0	0
		W								

0x0120 Interrupt Vector Base Register

Address	Name		Bit 7	Bit 6	Bit 5	Bit 4	Bit 3	Bit 2	Bit 1	Bit 0
0x0120	IVBR	R	IVB_ADDR[7:0]							
		W								

0x0121-0x013F Reserved

Address	Name		Bit 7	Bit 6	Bit 5	Bit 4	Bit 3	Bit 2	Bit 1	Bit 0
0x0114-0x011F	Reserved	R	0	0	0	0	0	0	0	0
		W								

0x0140-0x017F MSCAN Map

Address	Name		Bit 7	Bit 6	Bit 5	Bit 4	Bit 3	Bit 2	Bit 1	Bit 0
0x0140	CAN0CTL0	R	RXFRM	RXACT	CSWAI	SYNCH	TIME	WUPE	SLPRQ	INITRQ
		W								
0x0141	CAN0CTL1	R	CANE	CLKSRC	LOOPB	LISTEN	BORM	WUPM	SLPAK	INITAK
		W								
0x0142	CAN0BTR0	R	SJW1	SJW0	BRP5	BRP4	BRP3	BRP2	BRP1	BRP0
		W								

0x0140-0x017F MSCAN Map

Address	Name		Bit 7	Bit 6	Bit 5	Bit 4	Bit 3	Bit 2	Bit 1	Bit 0
0x0143	CAN0BTR1	R	SAMP	TSEG22	TSEG21	TSEG20	TSEG13	TSEG12	TSEG11	TSEG10
		W								
0x0144	CAN0RFLG	R	WUPIF	CSCIF	RSTAT1	RSTAT0	TSTAT1	TSTAT0	OVRIF	RXF
		W								
0x0145	CAN0RIER	R	WUPIE	CSCIE	RSTATE1	RSTATE0	TSTATE1	TSTATE0	OVRIE	RXFIE
		W								
0x0146	CAN0TFLG	R	0	0	0	0	0	TXE2	TXE1	TXE0
		W								
0x0147	CAN0TIER	R	0	0	0	0	0	TXEIE2	TXEIE1	TXEIE0
		W								
0x0148	CAN0TARQ	R	0	0	0	0	0	ABTRQ2	ABTRQ1	ABTRQ0
		W								
0x0149	CAN0TAAK	R	0	0	0	0	0	ABTAK2	ABTAK1	ABTAK0
		W								
0x014A	CAN0TBSEL	R	0	0	0	0	0	TX2	TX1	TX0
		W								
0x014B	CAN0IDAC	R	0	0	IDAM1	IDAM0	0	IDHIT2	IDHIT1	IDHIT0
		W								
0x014C	Reserved	R	0	0	0	0	0	0	0	0
		W								
0x014D	CAN0MISC	R	0	0	0	0	0	0	0	BOHOLD
		W								
0x014E	CAN0RXERR	R	RXERR7	RXERR6	RXERR5	RXERR4	RXERR3	RXERR2	RXERR1	RXERR0
		W								
0x014F	CAN0TXERR	R	TXERR7	TXERR6	TXERR5	TXERR4	TXERR3	TXERR2	TXERR1	TXERR0
		W								
0x0150-0x0153	CAN0IDAR0-CAN0IDAR3	R	AC7	AC6	AC5	AC4	AC3	AC2	AC1	AC0
		W								
0x0154-0x0157	CAN0IDMR0-CAN0IDMR3	R	AM7	AM6	AM5	AM4	AM3	AM2	AM1	AM0
		W								
0x0158-0x015B	CAN0IDAR4-CAN0IDAR7	R	AC7	AC6	AC5	AC4	AC3	AC2	AC1	AC0
		W								
0x015C-0x015F	CAN0IDMR4-CAN0IDMR7	R	AM7	AM6	AM5	AM4	AM3	AM2	AM1	AM0
		W								
0x0160-0x016F	CAN0RXFG	R	FOREGROUND RECEIVE BUFFER (SeeTable)							
		W								
0x0170-0x017F	CAN0TXFG	R	FOREGROUND TRANSMIT BUFFER (SeeTable)							
		W								

MSCAN Foreground Receive and Transmit Buffer Layout

Address	Name		Bit 7	Bit 6	Bit 5	Bit 4	Bit 3	Bit 2	Bit 1	Bit 0
0xXXX0	Extended ID	R	ID28	ID27	ID26	ID25	ID24	ID23	ID22	ID21
	Standard ID	R	ID10	ID9	ID8	ID7	ID6	ID5	ID4	ID3
	CANxRIDR0	W								
0xXXX1	Extended ID	R	ID20	ID19	ID18	SRR=1	IDE=1	ID17	ID16	ID15
	Standard ID	R	ID2	ID1	ID0	RTR	IDE=0			
	CANxRIDR1	W								
0xXXX2	Extended ID	R	ID14	ID13	ID12	ID11	ID10	ID9	ID8	ID7
	Standard ID	R								
	CANxRIDR2	W								
0xXXX3	Extended ID	R	ID6	ID5	ID4	ID3	ID2	ID1	ID0	RTR
	Standard ID	R								
	CANxRIDR3	W								
0xXXX4-0xXXXB	CANxRDSR0-CANxRDSR7	R	DB7	DB6	DB5	DB4	DB3	DB2	DB1	DB0
		W								
0xXXXC	CANRxDLR	R					DLC3	DLC2	DLC1	DLC0
		W								
0xXXXD	Reserved	R								
		W								
0xXXXE	CANxRTSRH	R	TSR15	TSR14	TSR13	TSR12	TSR11	TSR10	TSR9	TSR8
		W								
0xXXXF	CANxRTSRL	R	TSR7	TSR6	TSR5	TSR4	TSR3	TSR2	TSR1	TSR0
		W								
0xXX10	Extended ID CANxTIDR0	R	ID28	ID27	ID26	ID25	ID24	ID23	ID22	ID21
		W								
	Standard ID	R	ID10	ID9	ID8	ID7	ID6	ID5	ID4	ID3
		W								
0xXX0x XX10	Extended ID CANxTIDR1	R	ID20	ID19	ID18	SRR=1	IDE=1	ID17	ID16	ID15
		W								
	Standard ID	R	ID2	ID1	ID0	RTR	IDE=0			
		W								
0xXX12	Extended ID CANxTIDR2	R	ID14	ID13	ID12	ID11	ID10	ID9	ID8	ID7
		W								
	Standard ID	R								
		W								
0xXX13	Extended ID CANxTIDR3	R	ID6	ID5	ID4	ID3	ID2	ID1	ID0	RTR
		W								
	Standard ID	R								
		W								
0xXX14-0xXX1B	CANxTDSR0–CANxTDSR7	R	DB7	DB6	DB5	DB4	DB3	DB2	DB1	DB0
		W								
0xXX1C	CANxTDLR	R					DLC3	DLC2	DLC1	DLC0
		W								
0xXX1D	CANxTTBPR	R	PRIO7	PRIO6	PRIO5	PRIO4	PRIO3	PRIO2	PRIO1	PRIO0
		W								

MSCAN Foreground Receive and Transmit Buffer Layout

Address	Name		Bit 7	Bit 6	Bit 5	Bit 4	Bit 3	Bit 2	Bit 1	Bit 0
0xXX1E	CANxTTSRH	R	TSR15	TSR14	TSR13	TSR12	TSR11	TSR10	TSR9	TSR8
		W								
0xXX1F	CANxTTSRL	R	TSR7	TSR6	TSR5	TSR4	TSR3	TSR2	TSR1	TSR0
		W								

0x0180-023F Reserved

Address	Name		Bit 7	Bit 6	Bit 5	Bit 4	Bit 3	Bit 2	Bit 1	Bit 0
0x0180-0x023F	Reserved	R	0	0	0	0	0	0	0	0
		W								

0x0240 -0x027F Port Integration Module (PIM) Map 4 of 4

Address	Name		Bit 7	Bit 6	Bit 5	Bit 4	Bit 3	Bit 2	Bit 1	Bit 0
0x0240	PTT	R	PTT7	PTT6	PTT5	PTT4	PTT3	PTT2	PTT1	PTT0
		W								
0x0241	PTIT	R	PTIT7	PTIT6	PTIT5	PTIT4	PTIT3	PTIT2	PTIT1	PTIT0
		W								
0x0242	DDRT	R	DDRT7	DDRT6	DDRT5	DDRT4	DDRT3	DDRT2	DDRT1	DDRT0
		W								
0x0243	RDRT	R	RDRT7	RDRT6	RDRT5	RDRT4	RDRT3	RDRT2	RDRT1	RDRT0
		W								
0x0244	PERT	R	PERT7	PERT6	PERT5	PERT4	PERT3	PERT2	PERT1	PERT0
		W								
0x0245	PPST	R	PPST7	PPST6	PPST5	PPST4	PPST3	PPST2	PPST1	PPST0
		W								
0x0246	Reserved	R	0	0	0	0	0	0	0	0
		W								
0x0247	PTTRR	R	PTTRR7	PTTRR6	PTTRR5	PTTRR4	0	PTTRR2	PTTRR1	PTTRR0
		W								

0x0240 -0x027F Port Integration Module (PIM) Map 4 of 4

Address	Name		Bit 7	Bit 6	Bit 5	Bit 4	Bit 3	Bit 2	Bit 1	Bit 0
0x0248	PTS	R W	PTS7	PTS6	PTS5	PTS4	PTS3	PTS2	PTS1	PTS0
0x0249	PTIS	R W	PTIS7	PTIS6	PTIS5	PTIS4	PTIS3	PTIS2	PTIS1	PTIS0
0x024A	DDRS	R W	DDRS7	DDRS6	DDRS5	DDRS4	DDRS3	DDRS2	DDRS1	DDRS0
0x024B	RDRS	R W	RDRS7	RDRS6	RDRS5	RDRS4	RDRS3	RDRS2	RDRS1	RDRS0
0x024C	PERS	R W	PERS7	PERS6	PERS5	PERS4	PERS3	PERS2	PERS1	PERS0
0x024D	PPSS	R W	PPSS7	PPSS6	PPSS5	PPSS4	PPSS3	PPSS2	PPSS1	PPSS0
0x024E	WOMS	R W	WOMS7	WOMS6	WOMS5	WOMS4	WOMS3	WOMS2	WOMS1	WOMS0
0x024F	Reserved	R W	0	0	0	0	0	0	0	0
0x0250	PTM	R W	PTM7	PTM6	PTM5	PTM4	PTM3	PTM2	PTM1	PTM0
0x0251	PTIM	R W	PTIM7	PTIM6	PTIM5	PTIM4	PTIM3	PTIM2	PTIM1	PTIM0
0x0252	DDRM	R W	DDRM7	DDRM6	DDRM5	DDRM4	DDRM3	DDRM2	DDRM1	DDRM0
0x0253	RDRM	R W	RDRM7	RDRM6	RDRM5	RDRM4	RDRM3	RDRM2	RDRM1	RDRM0
0x0254	PERM	R W	PERM7	PERM6	PERM5	PERM4	PERM3	PERM2	PERM1	PERM0
0x0255	PPSM	R W	PPSM7	PPSM6	PPSM5	PPSM4	PPSM3	PPSM2	PPSM1	PPSM0
0x0256	WOMM	R W	WOMM7	WOMM6	WOMM5	WOMM4	WOMM3	WOMM2	WOMM1	WOMM0
0x0257	MODRR	R W	MODRR7	MODRR6	0	MODRR4	0	0	0	0
0x0258	PTP	R W	PTP7	PTP6	PTP5	PTP4	PTP3	PTP2	PTP1	PTP0
0x0259	PTIP	R W	PTIP7	PTIP6	PTIP5	PTIP4	PTIP3	PTIP2	PTIP1	PTIP0
0x025A	DDRP	R W	DDRP7	DDRP6	DDRP5	DDRP4	DDRP3	DDRP2	DDRP1	DDRP0
0x025B	RDRP	R W	RDRP7	RDRP6	RDRP5	RDRP4	RDRP3	RDRP2	RDRP1	RDRP0
0x025C	PERP	R W	PERP7	PERP6	PERP5	PERP4	PERP3	PERP2	PERP1	PERP0
0x025D	PPSP	R W	PPSP7	PPSP6	PPSP5	PPSP4	PPSP3	PPSP2	PPSP1	PPSS0
0x025E	PIEP	R W	PIEP7	PIEP6	PIEP5	PIEP4	PIEP3	PIEP2	PIEP1	PIEP0
0x025F	PIFP	R W	PIFP7	PIFP6	PIFP5	PIFP4	PIFP3	PIFP2	PIFP1	PIFP0

0x0240 -0x027F Port Integration Module (PIM) Map 4 of 4

Address	Name		Bit 7	Bit 6	Bit 5	Bit 4	Bit 3	Bit 2	Bit 1	Bit 0
0x0260	Reserved	R	0	0	0	0	0	0	0	0
		W								
0x0261	Reserved	R	0	00	0	0	0	0	0	0
		W								
0x0262	Reserved	R	0	0	0	0	0	0	0	0
		W								
0x0263	Reserved	R	0	0	0	0	0	0	0	0
		W								
0x0264	Reserved	R	0	0	0	0	0	0	0	0
		W								
0x0265	Reserved	R	0	0	0	0	0	0	0	0
		W								
0x0266	Reserved	R	0	0	0	0	0	0	0	0
		W								
0x0267	Reserved	R	0	0	0	0	0	0	0	0
		W								
0x0268	PTJ	R	PTJ7	PTJ6	0	0	0	PTJ2	PTJ1	PTJ0
		W								
0x0269	PTIJ	R	PTIJ7	PTIJ6	0	0	0	PTIJ12	PTIJ1	PTIJ0
		W								
0x026A	DDRJ	R	DDRJ7	DDRJ6	0	0	0	DDRJ2	DDRJ1	DDRJ0
		W								
0x026B	RDRJ	R	RDRJ7	RDRJ6	0	0	0	RDRJ2	RDRJ1	RDRJ0
		W								
0x026C	PERJ	R	PERJ7	PERJ6	0	0	0	PERJ2	PERJ1	PERJ0
		W								
0x026D	PPSJ	R	PPSJ7	PPSJ6	0	0	0	PPSJ2	PPSJ1	PPSJ0
		W								
0x026E	PIEJ	R	PIEJ7	PIEJ6	0	0	0	PIEJ2	PIEJ1	PIEJ0
		W								
0x026f	PIFJ	R	PIFJ7	PIFJ6	0	0	0	PIFJ2	PIFJ1	PIFJ0
		W								
0x0270	PT0AD0	R	PT0AD07	PT0AD06	PT0AD05	PT0AD04	PT0AD03	PT0AD02	PT0AD01	PT0AD00
		W								
0x0271	PT1AD0	R	PT1AD07	PT1AD06	PT1AD05	PT1AD04	PT1AD03	PT1AD02	PT1AD01	PT1AD00
		W								
0x0272	DDR0AD0	R	DDR0AD07	DDR0AD06	DDR0AD05	DDR0AD04	DDR0AD03	DDR0AD02	DDR0AD01	DDR0AD00
		W								
0x0273	DDR1AD0	R	DDR1AD07	DDR1AD06	DDR1AD05	DDR1AD04	DDR1AD03	DDR1AD02	DDR1AD01	DDR1AD00
		W								
0x0274	RDR0AD0	R	RDR0AD07	RDR0AD06	RDR0AD05	RDR0AD04	RDR0AD03	RDR0AD02	RDR0AD01	RDR0AD00
		W								
0x0275	RDR1AD0	R	RDR1AD07	RDR1AD06	RDR1AD05	RDR1AD04	RDR1AD03	RDR1AD02	RDR1AD01	RDR1AD00
		W								

0x0240 -0x027F Port Integration Module (PIM) Map 4 of 4

Address	Name		Bit 7	Bit 6	Bit 5	Bit 4	Bit 3	Bit 2	Bit 1	Bit 0
0x0276	PER0AD0	R	PER0AD07	PER0AD06	PER0AD05	PER0AD04	PER0AD03	PER0AD02	PER0AD01	PER0AD00
		W								
0x0277	PER1AD0	R	PER1AD07	PER1AD06	PER1AD05	PER1AD04	PER1AD03	PER1AD02	PER1AD01	PER1AD00
		W								
0x0278-0x027F	Reserved	R	0	0	0	0	0	0	0	0
		W								

0x0280-0x02EF Reserved

Address	Name		Bit 7	Bit 6	Bit 5	Bit 4	Bit 3	Bit 2	Bit 1	Bit 0
0x0280-0x02EF	Reserved	R	0	0	0	0	0	0	0	0
		W								

0x02F0-0x02FF Clock and Power Management Unit (CPMU) Map 2 of 2

Address	Name		Bit 7	Bit 6	Bit 5	Bit 4	Bit 3	Bit 2	Bit 1	Bit 0
0x02F0	CPMUHTCL	R	0	0	VSEL	0	HTEN	HTDS	HTIE	HTIF
		W								
0x02F1	CPMULVCTL	R	0	0	0	0	0	LVDS	LVIE	LVIF
		W								
0x02F2	CPMUAPICTL	R	APICLK	0	0	APIFES	APIEA	APIFE	APIE	APIF
		W								
0x02F3	VREGAPITR	R	APITR5	APITR4	APITR3	APITR2	APITR1	APITR0	0	0
		W								
0x02F4	CPMUAPIRH	R	APIR15	APIR14	APIR13	APIR12	APIR11	APIR10	APIR9	APIR8
		W								
0x02F5	CPMUAPIRL	R	APIR7	APIR6	APIR5	APIR4	APIR3	APIR2	APIR1	APIR0
		W								
0x02F6	Reserved	R	0	0	0	0	0	0	0	0
		W								
0x02F7	CPMUHTTR	R	HTOEN	0	0	0	HTTR3	HTTR2	HTTR1	HTTR0
		W								
0x02F8	CPMU IRCTRIMH	R	TCTRIM[3:0]				0	0	IRCTRIM[9:8]	
		W								
0x02F9	CPMU IRCTRIML	R	IRCTRIM[7:0]							
		W								
0x02FA	CPMUOSC	R	OSCE	OSCBW	0	OSCFILT[4:0]				
		W								
0x02FB	CPMUPROT	R	0	0	0	0	0	0	0	PROT
		W								
0x02FC	Reserved	R	0	0	0	0	0	0	0	0
		W								

0x0300-0x03FF Reserved

Address	Name		Bit 7	Bit 6	Bit 5	Bit 4	Bit 3	Bit 2	Bit 1	Bit 0
0x0300-0x03FF	Reserved	R	0	0	0	0	0	0	0	0
		W								

How to Reach Us:

Home Page:
freescale.com

Web Support:
freescale.com/support

Information in this document is provided solely to enable system and software implementers to use Freescale products. There are no express or implied copyright licenses granted hereunder to design or fabricate any integrated circuits based on the information in this document.

Freescale reserves the right to make changes without further notice to any products herein. Freescale makes no warranty, representation, or guarantee regarding the suitability of its products for any particular purpose, nor does Freescale assume any liability arising out of the application or use of any product or circuit, and specifically disclaims any and all liability, including without limitation consequential or incidental damages. “Typical” parameters that may be provided in Freescale data sheets and/or specifications can and do vary in different applications, and actual performance may vary over time. All operating parameters, including “typicals,” must be validated for each customer application by customer’s technical experts. Freescale does not convey any license under its patent rights nor the rights of others. Freescale sells products pursuant to standard terms and conditions of sale, which can be found at the following address: freescale.com/SalesTermsandConditions

Freescale and the Freescale logo are trademarks of Freescale Semiconductor, Inc., Reg. U.S. Pat. & Tm. Off. All other product or service names are the property of their respective owners.
© 2013 Freescale Semiconductor, Inc.

Document Number: MC9S12P128RMV1
Rev. 1.14
24 June 2013