S12 MagniV Mixed Signal MCUs S12VR Family

Integrated solution for Relay Driver (eg. Windowlift/sunroof)

Features

- Relay Driver
- Vreg for 12V Supply
- Integrated LIN Phy
- Ultra Reliable Industrial

Product One-Sheet

Get Sample | Data Sheet | Tools

System in a Package – Highly integrated part ideal for space constrained relay driven DC motors on LIN Bus

Low System Cost – Operating straight from car battery, integrated LIN phy, LS & HS drivers, HVI's for 12 V switch interfaces, EVDD for sensor supply reduce system, qualification and manufacturing cost.

High Reliability– High immunity to EMI and ESD stresses, LIN 2.x compliant with +/- 8 kV ESD capability.

Enablement – Supported by comprehensive hardware and software solution, which reduces development costs and time to market.

S12VR Specifications

Flash	16-64 KB	LS Driver	2 (for driving relays)
RAM	2-6 KB	HS Driver	1–2
EEPROM	128–512 B EE or 2-4 kB D-Flash	12V VREG	70 mA at 12 V
Core	S12	EVDD	1ch 5 V/20 mA (source)
Speed	25 Mhz	SCI/SPI	Up to 2/1
ADC	10 bit 10 channel	Packages	32 LQFP, 48 LQFP
HVI	4–6	Timer/PWM	4-ch. 16 bit/4-ch. 16 bit
LIN Phy	1	Op Range	5.5 V–18 V

Orderable Sample Part Numbers (superset)

Part Number	Temp Range	Package
S9S12VR64AF0MLF	-40 to 125 °C	48 LQFP
S9S12VR64AF0MLC	-40 to 125 °C	32 LQFP
S9S12VR32F0MLC	-40 to 125 °C	32 LQFP
S9S12VRP64F0MLF	-40 to 125 °C	48 LQFP

Product Block Diagram

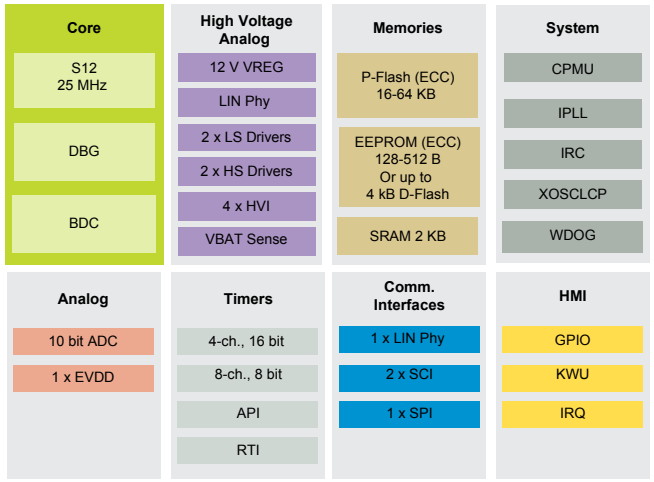

Application Example Block Diagram

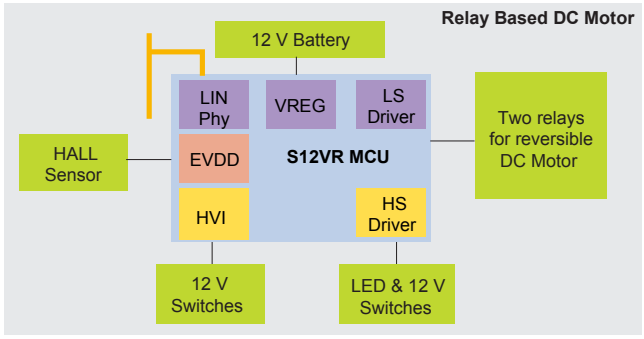

Success Stories

- Anti Pinch Window-Lift and Sunroof Worldwide
- Power Lift Gate in Americas
- Seat Heating in China
- Small LIN node in Asia

Target Applications

- Anti-Pinch Window Lift
- Sunroof
- Automatic Doors
- Power Lift Gate
- Seat Adjustment
- Seat Heating
- Small LIN Node

Enablement Tools

- Evaluation Boards / Hardware
  - S12VR64EVB
  - S12VR32EVB
  - DEVKIT-S12VRP
- Reference Solutions
  - Anti-Pinch Window Lift Reference Design
- Compiler / Debugger
  - CodeWarrior
  - Cosmic
- LIN Stack

www.nxp.com/S12VR

NXP and the NXP logo are trademarks of NXP B.V. All other product or service names are the property of their respective owners.
© 2018 NXP B.V.

Document Number: S12VRFS REV 0