OWR-0860T-16

In-ear driver, full range

Available in a range of variants subjects to customers audio preference.



Characteristics

Size (ØxH) [mm]	8.6x4.5	
Sensitivity [dBSPL]	99.7±3dB	[dBSPL @1kHz, 1mW, 2cc]
Impedance [Ω]	16	
Power [W]	5.0 / 10.0	Free field
F0 [Hz]	3100	Free field
Termination	Terminals	

Specifications are subject to change without prior notice. Upon request Ole Wolff can supply further specifications, simulation parameters etc.

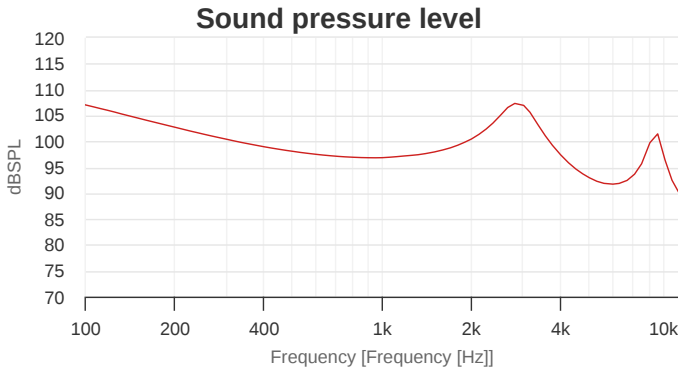

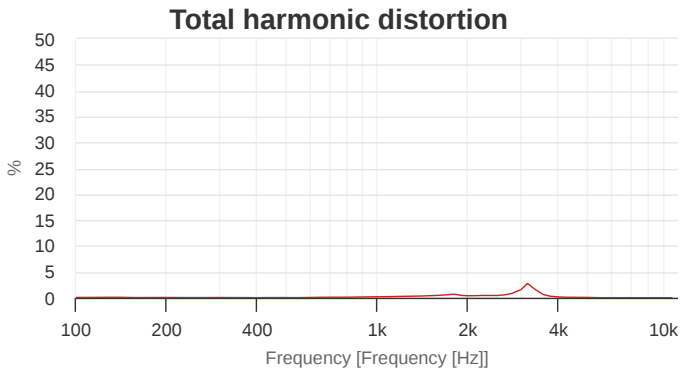

Mechanical drawing

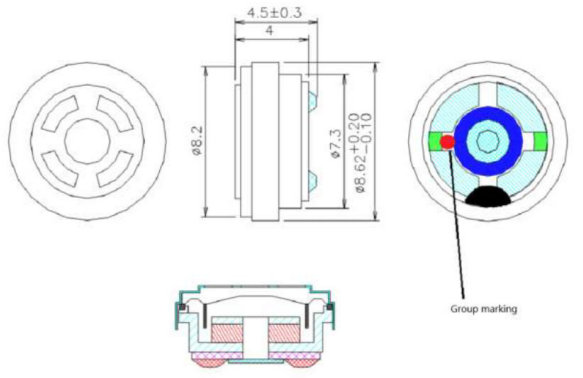

Dimension are in mm,tolerance:±0.3mm.

OLE WOLFF

Ole Wolff Elektronik A/S, Roedengvej 14, 4180 Soroe, DK Denmark
T: +45 5783 3830 | sales@owolff.com