OWR-3052T-32A

On-ear headphone

Full range driver aimed for music headphones.



Characteristics

Size (ØxH) [mm]	30.0x5.1	
Sensitivity [dBSPL]	94.0±3dB	[dBSPL @1kHz, 10 mW, 1cm]
Impedance [Ω]	32	
Power [W]	10.0 / 30.0	Free field
F0 [Hz]	150	Free field
Termination	Terminals	

Specifications are subject to change without prior notice. Upon request Ole Wolff can supply further specifications, simulation parameters etc.

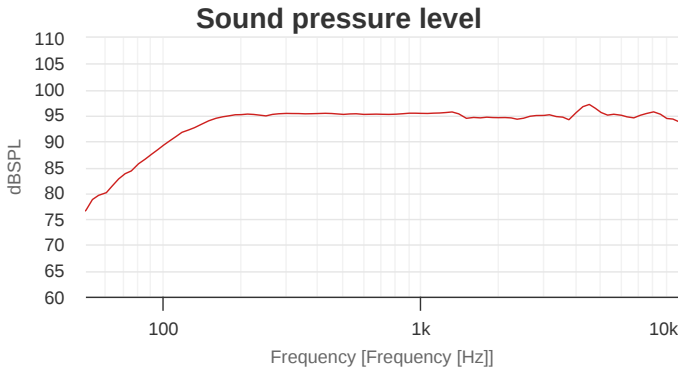

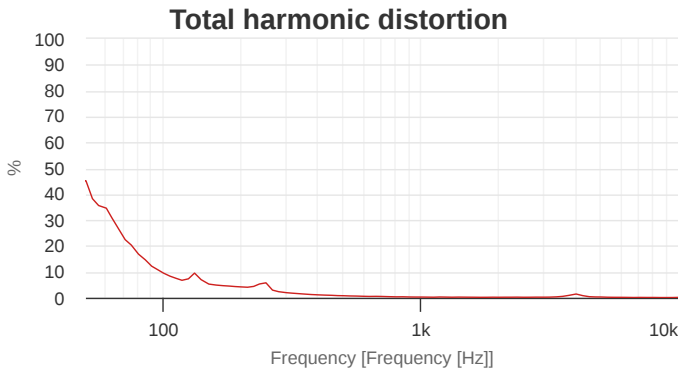

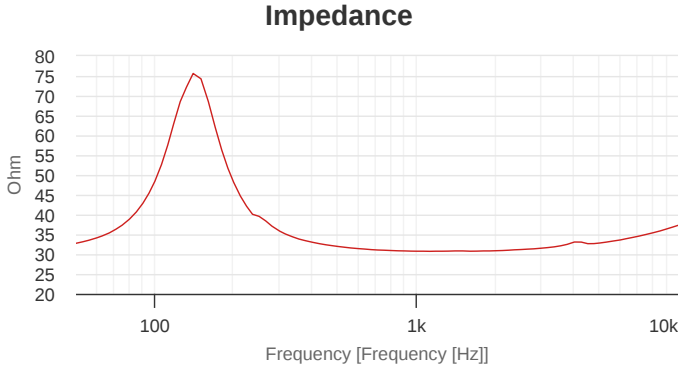

Mechanical drawing

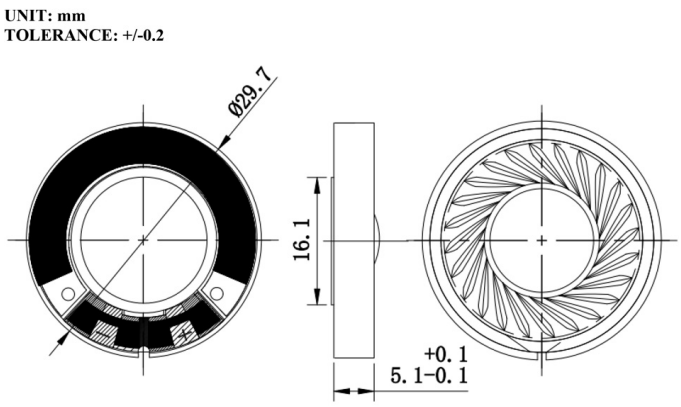

Ole Wolff Elektronik A/S, Roedengvej 14, 4180 Soroe, DK Denmark
T: +45 5783 3830 | sales@owolff.com