OWR-3507T-36A

High-end headphone driver

Full range driver with Pistonic diaphragm aimed for music and gaming headphones, ANC compatible.



Characteristics

Size (ØxH) [mm]	35.0x6.7	
Sensitivity [dBSPL]	117.0±3dB	[1mW, 1.0 KHz, IEC318]
Impedance [Ω]	36	
Power [W]	10.0 / 20.0	Free field
F0 [Hz]	72	Free field
Termination	Terminals	

Specifications are subject to change without prior notice. Upon request Ole Wolff can supply further specifications, simulation parameters etc.

Sound Pressure Level

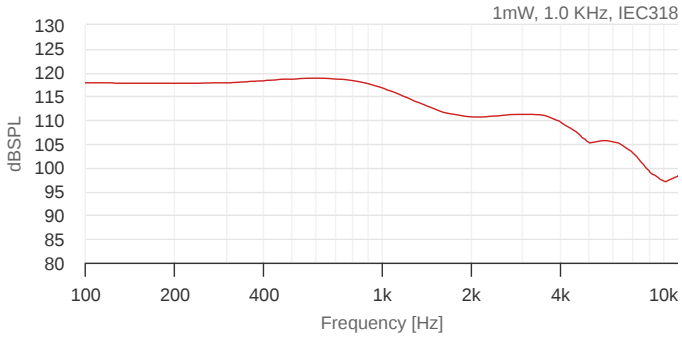

Total Harmonic Distortion

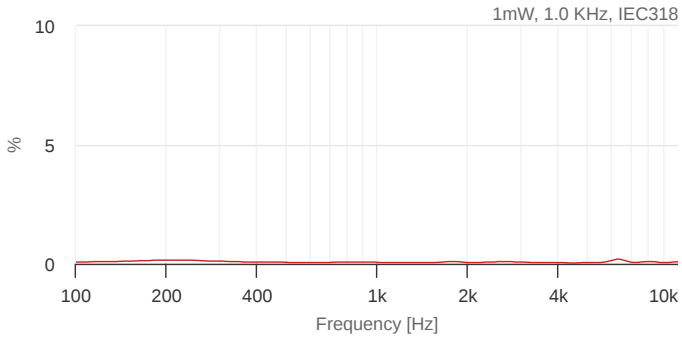

Mechanical drawing

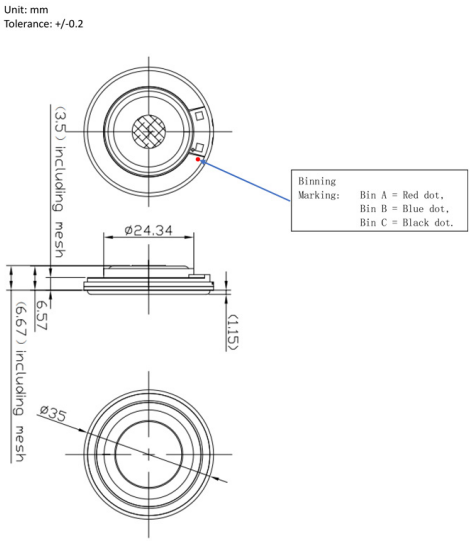

Ole Wolff Elektronik A/S, Roedengvej 14, 4180 Soroe, DK Denmark
T: +45 5783 3830 | sales@owolff.com