OLE WOLFF

OWS-091630LA-8B

Small rectangular speaker

Optimized to play in cavities about 1cc. Available with leaf spring.



Characteristics

Size (LxWxH) [mm]	16.0x9.0x3.0	
Sensitivity [dBSPL]	75.0±3 dB	1W/1.0m, 1cc rv
Impedance [Ω]	8	
Power [W]	1.0 / 1.2	nom / max, in 1cc
F0 [Hz]	950	(in 1cc)
Termination	Spring contacts	

Specifications are subject to change without prior notice. Upon request Ole Wolff can supply further specifications, simulation parameters etc.

Mechanical drawing

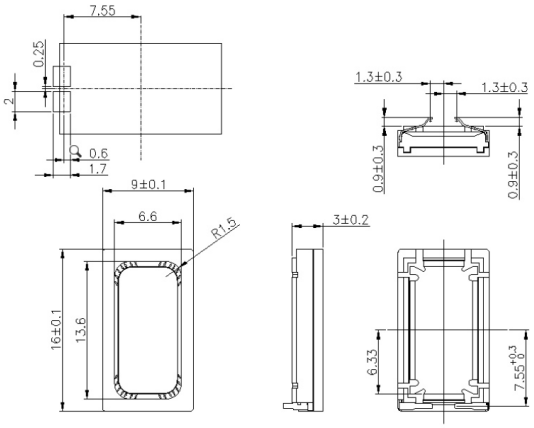

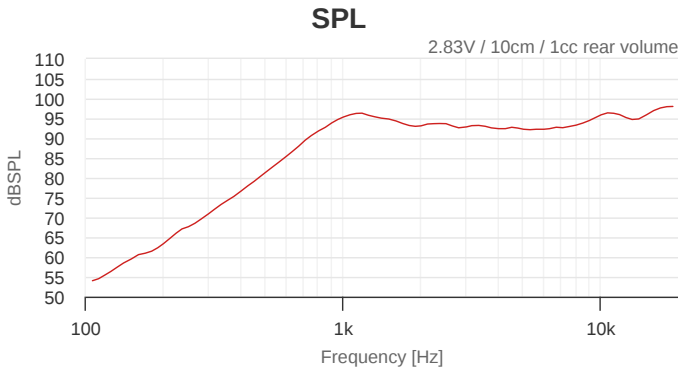

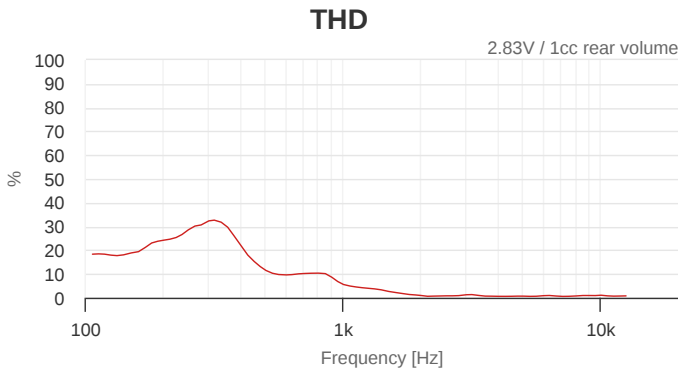

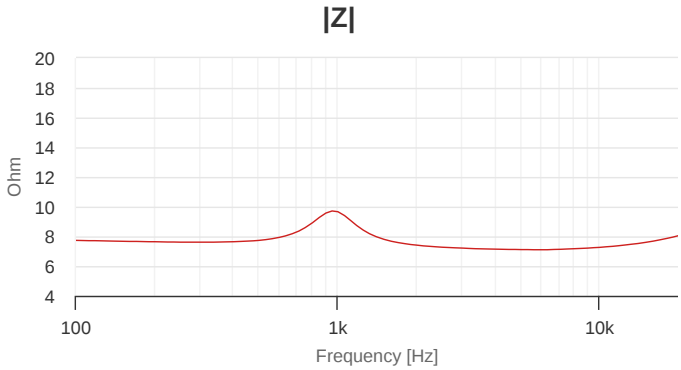

Ole Wolff Elektronik A/S, Roedengvej 14, 4180 Soroe, DK Denmark
T: +45 5783 3830 | sales@owolff.com