OWS-131845W50A-8

Rectangular speaker

This high-efficiency microspeaker has been upgraded to deliver even higher SPL levels with extented high frequency respose compared to the previous version without increasing the outer dimensions. Also available with spring contacts.



Characteristics

Size (LxWxH) [mm]	18.0x13.0x4.5	
Sensitivity [dBSPL]	80.0±3 dB	1W/1.0m, 1cc rv
Impedance [Ω]	8	
Power [W]	1.0 / 1.2	nom / max, in 1cc
F0 [Hz]	950	(in 1cc)
Termination	Wire	Also available with spring contacts

Specifications are subject to change without prior notice. Upon request Ole Wolff can supply further specifications, simulation parameters etc.

Mechanical drawing

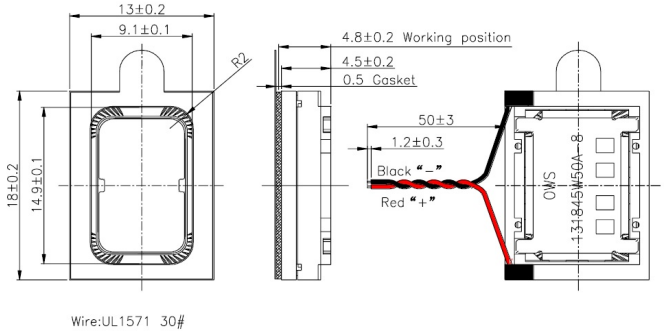

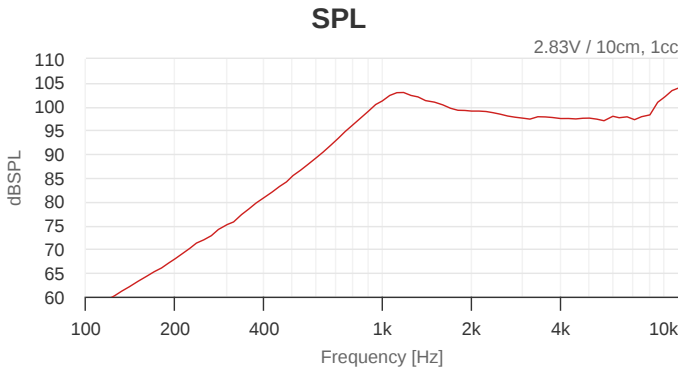

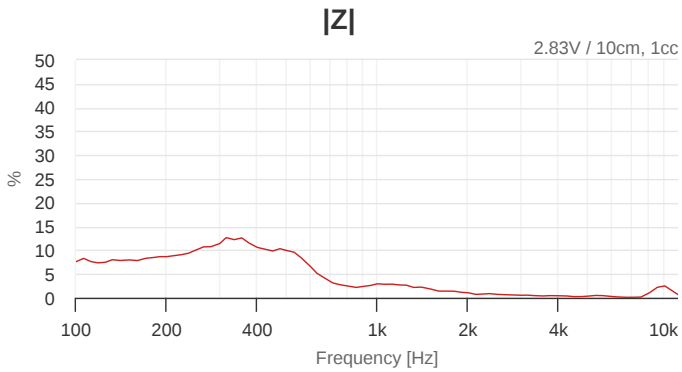

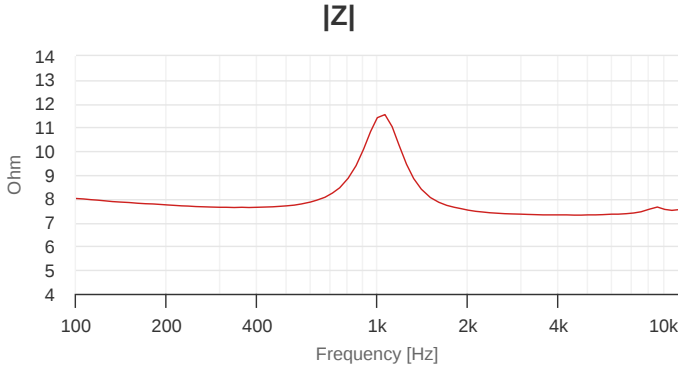

Ole Wolff Elektronik A/S, Roedengvej 14, 4180 Soroe, DK Denmark
T: +45 5783 3830 | sales@owolff.com