OWS-151540S-8

Rectangular micro speaker

Miniature speaker well suited for IoT devices etc.



Characteristics

Size (ØxH) [mm]	0.0x4.0	
Sensitivity [dBSPL]	92.0±3 dB	0.8W/0.1m, free air
Impedance [Ω]	8	
Power [W]	0.8 / 1.0	nom / max, free air
F0 [Hz]	800	Free air
Termination	SMD	

Specifications are subject to change without prior notice. Upon request Ole Wolff can supply further specifications, simulation parameters etc.

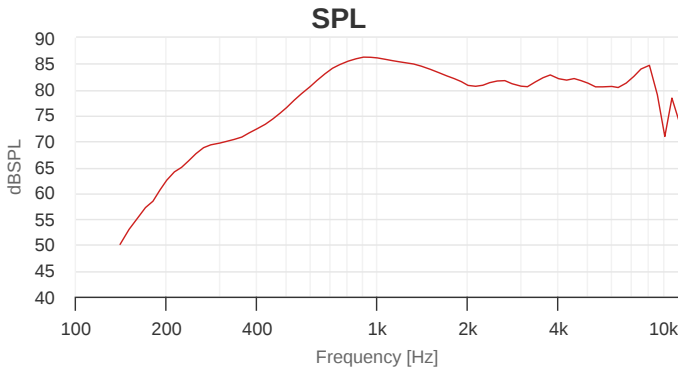

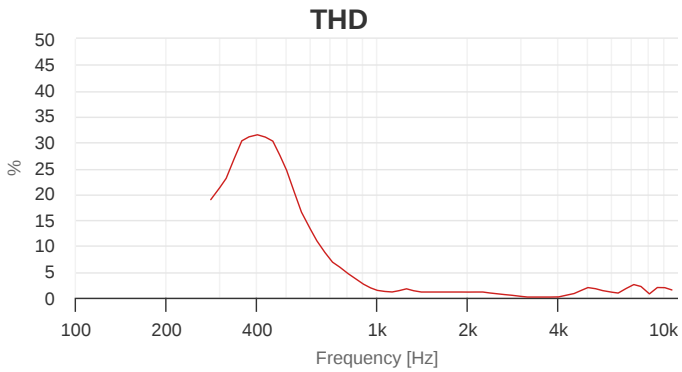

Mechanical drawing

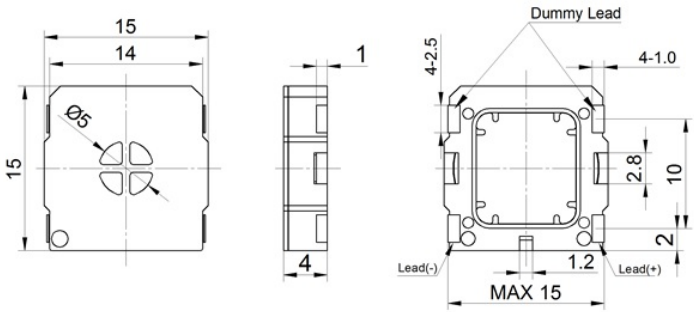

Ole Wolff Elektronik A/S, Roedengvej 14, 4180 Soroe, DK Denmark
T: +45 5783 3830 | sales@owolff.com