OWS-4065T-4C

High power speaker

High power speaker single suspension. Slim profile. Waterproof.
- Also available with lead wires.



Characteristics

Size (ØxH) [mm]	40.0x6.5	
Sensitivity [dBSPL]	80.0±3 dB	1.0W/1.0m, free air
Impedance [Ω]	4	
Power [W]	2.5 / 3.0	nom / max, free air
F0 [Hz]	420	Free air
Termination	Terminals	

Specifications are subject to change without prior notice. Upon request Ole Wolff can supply further specifications, simulation parameters etc.

Mechanical drawing

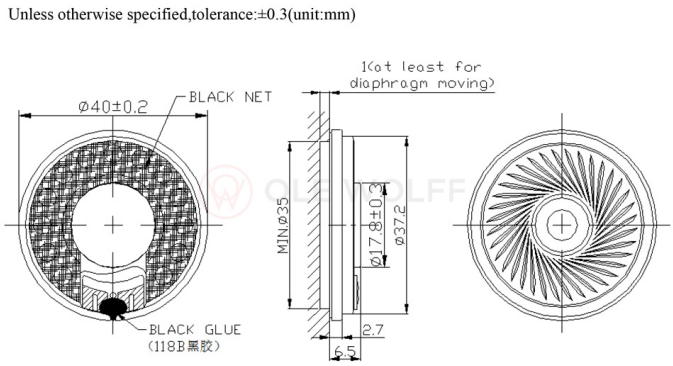

Ole Wolff Elektronik A/S, Roedengvej 14, 4180 Soroe, DK Denmark
T: +45 5783 3830 | sales@owolff.com