

MINIBOT

assembly guide

document revision 2, October 2019

www.olimex.com

Board features

Minibot is an Open Source Hardware kit that produces a small robot with two motors and four photo sensors. Assembling this kit requires soldering! The board can be programmed to escape labyrinths or follow a line. The chip is pre-programmed with follow “the line” example. You can see it in action here:

https://www.youtube.com/watch?v=u1omfYXurb0

All documents and sources can be found at the following GitHub address:

https://github.com/OLIMEX/Minibot

- **IMPORTANT!** This board arrives as a kit! Soldering required!
- **IMPORTANT!** Soldering tools are not included in the kit!
- **IMPORTANT!** This design has no USB connector! Additional hardware might be required to establish USB connection!
- **IMPORTANT!** The kit comes without a battery, it should be purchased separately!

Schematic

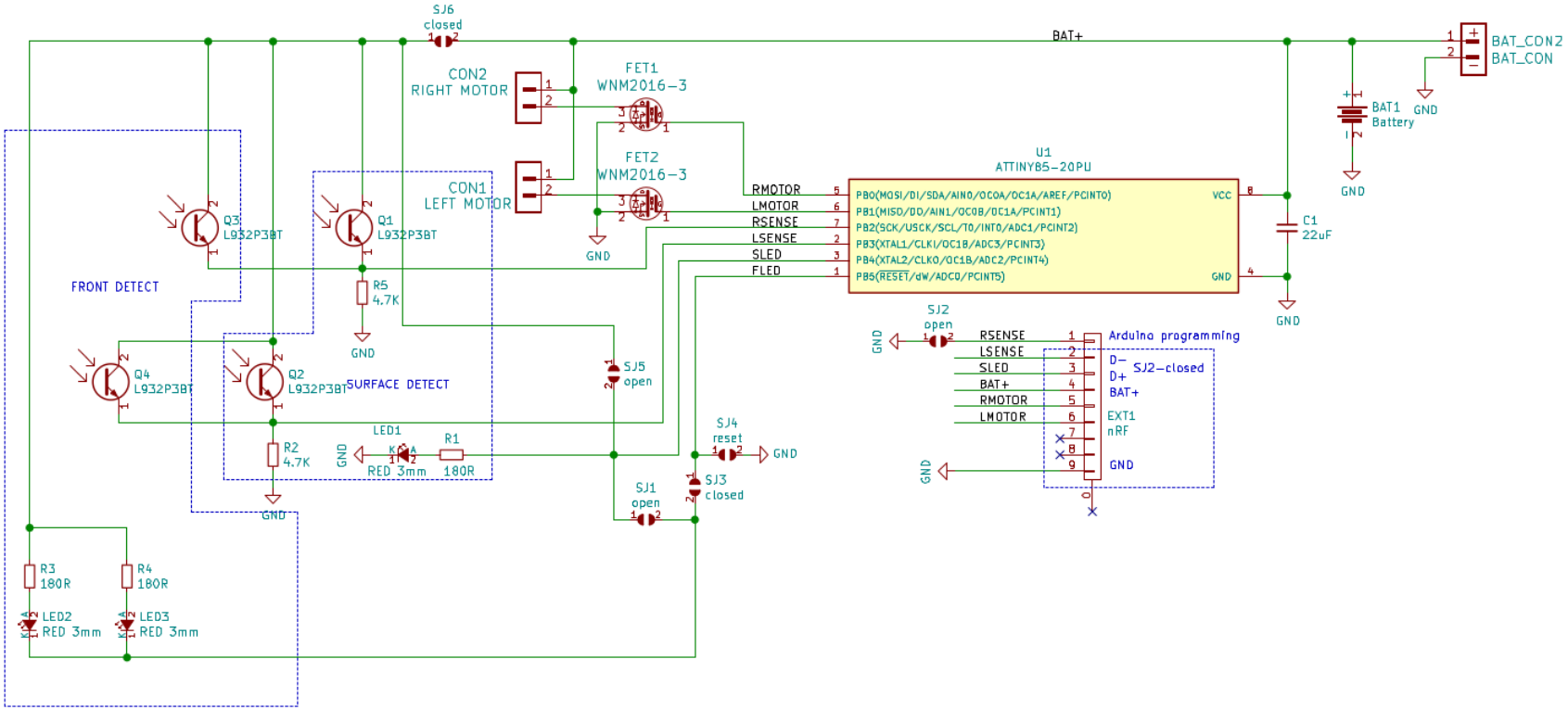

SJ6
closed
BAT+
BAT_CON2
BAT_CON
CON2
RIGHT MOTOR
FET1
WNM2016-3
FET2
WNM2016-3
CON1
LEFT MOTOR
BAT1
Battery
GND
U1
ATTINY85-20PU
RMOTOR
LMOTOR
RSENSE
LSENSE
SLED
FLED
PB0(MOSI/DI/SDA/AIN0/OC0A/OC1A/AREF/PCINT0)
PB1(MISO/DO/AIN1/OC0B/OC1A/PCINT1)
PB2(SCK/USCK/SCL/T0/INT0/ADC1/PCINT2)
PB3(XTAL1/CLKI/OC1B/ADC3/PCINT3)
PB4(XTAL2/CLKO/OC1B/ADC2/PCINT4)
PB5(RESET/dW/ADC0/PCINT5)
VCC
GND
C1
22uF
Q3
L932P3BT
Q1
L932P3BT
FRONT DETECT
R5
4.7K
Q4
L932P3BT
Q2
L932P3BT
SURFACE DETECT
SJ5
open
SJ2
open
Arduino programming
D-
D+
SJ2-closed
BAT+
EXT1
nRF
R2
4.7K
LED1
RED 3mm
R1
180R
SJ4
reset
SJ3
closed
SJ1
open
R3
180R
R4
180R
LED2
RED 3mm
LED3
RED 3mm

Component locations and assembly

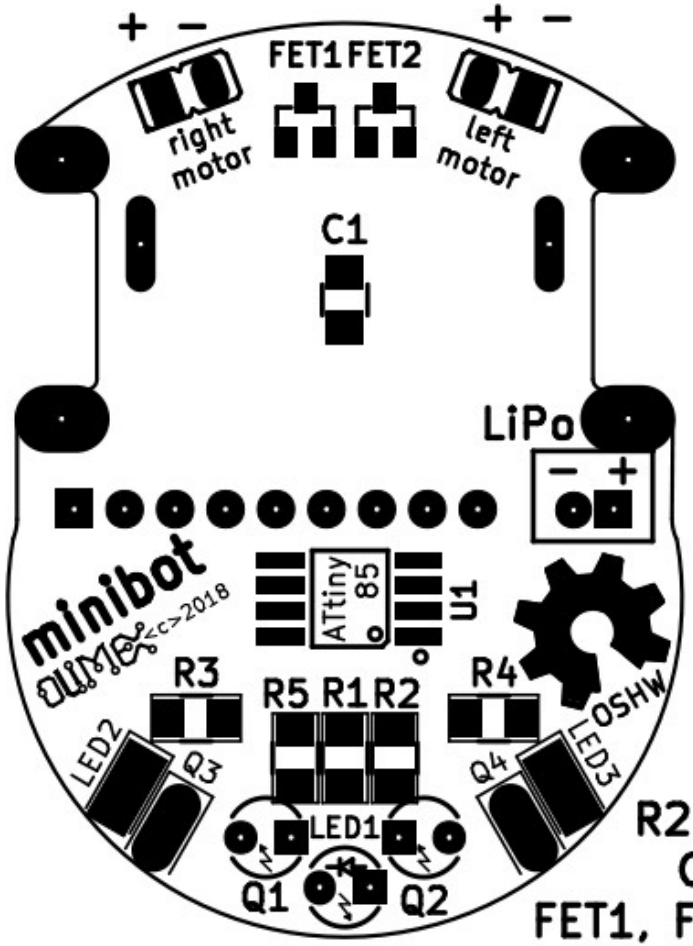

R1 – 1K
R2, R5 – 4.7K
C1 – 22uF
FET1, FET2 – WNM2016
Q1, Q2 – L342 (clear blue) – long pin on the square pad
LED1 – red (clear) – long pin on the square pad

Assembly notes:

LED2, LED3 and Q3, Q4 are soldered aside.

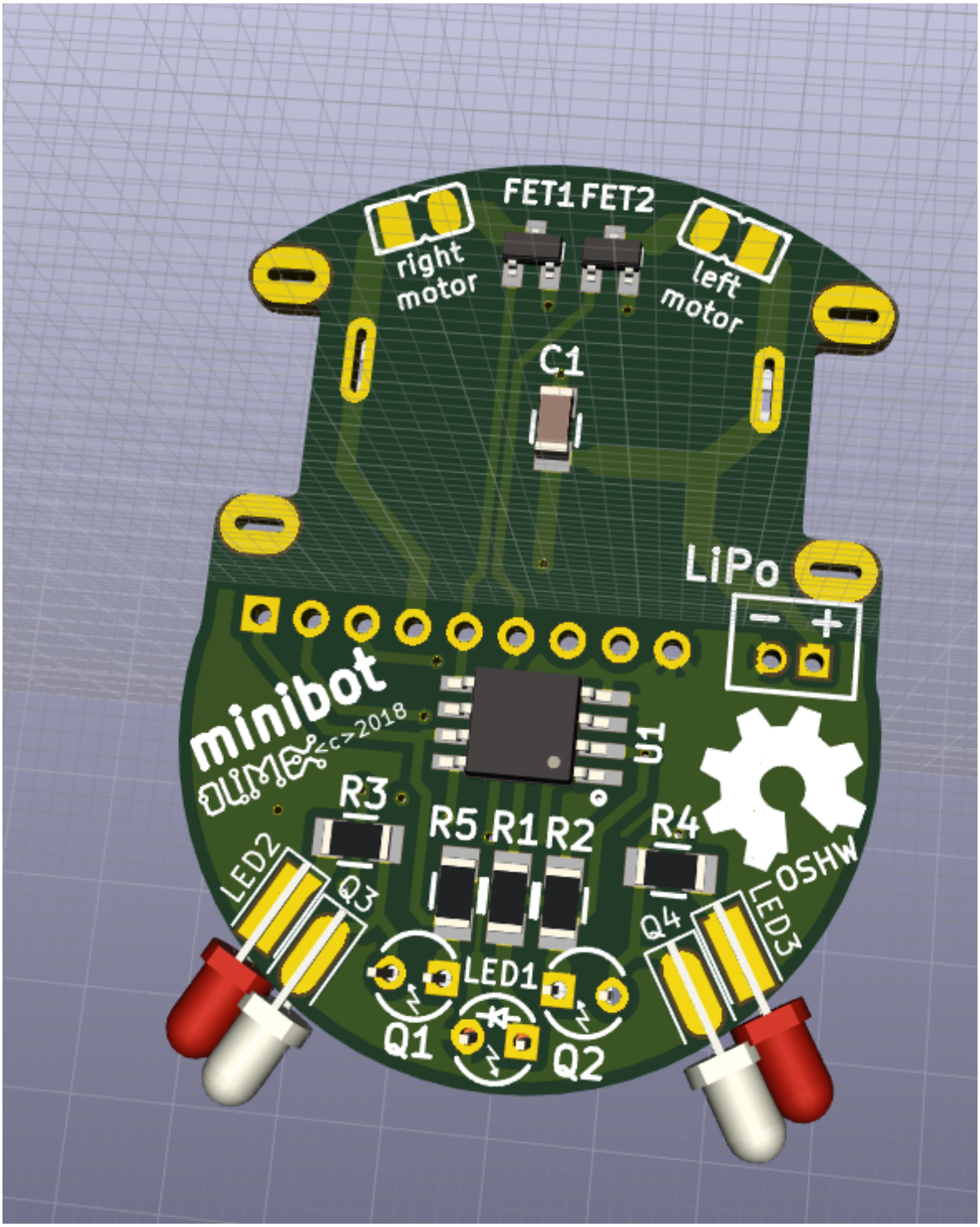

Q1, Q2, LED1 are soldered at the bottom

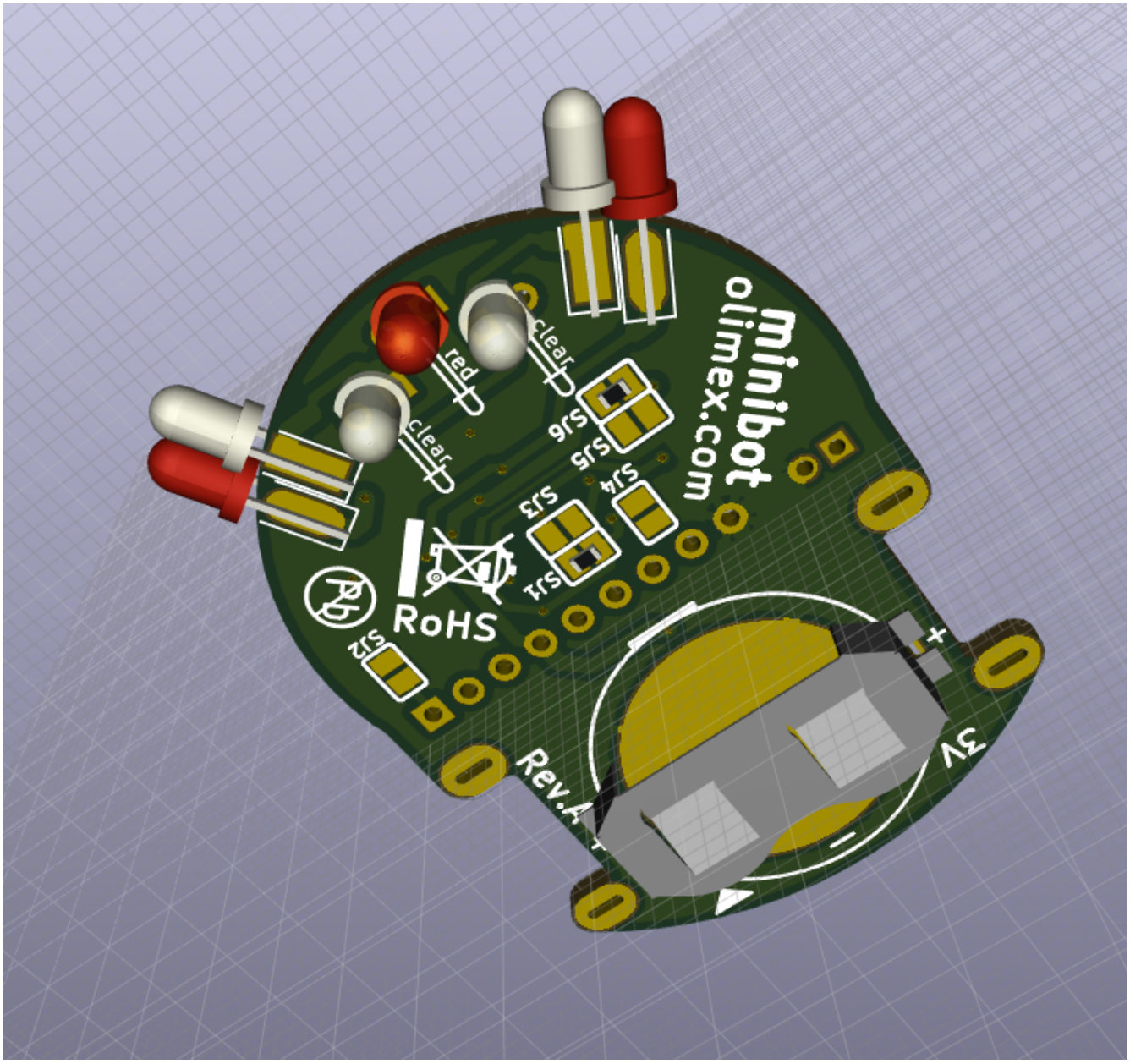

There is thermo shrinking tube in the kit – please cut in four and use each part to shield the four photo sensors, so they receive light only from the top and not from aside. After placing the thermo shrinking tube over a photo sensor heat it moderately so it shrinks:



In the kit there are two rubber pads which can be used as vehicle tyres on each motors. We suggest to cut and use the smaller rubber pads as tyres, using the bigger pads will make robot faster but also not very stable.



Prepare the motors for soldering to the board by tinning two dots on their body as shown on this picture:

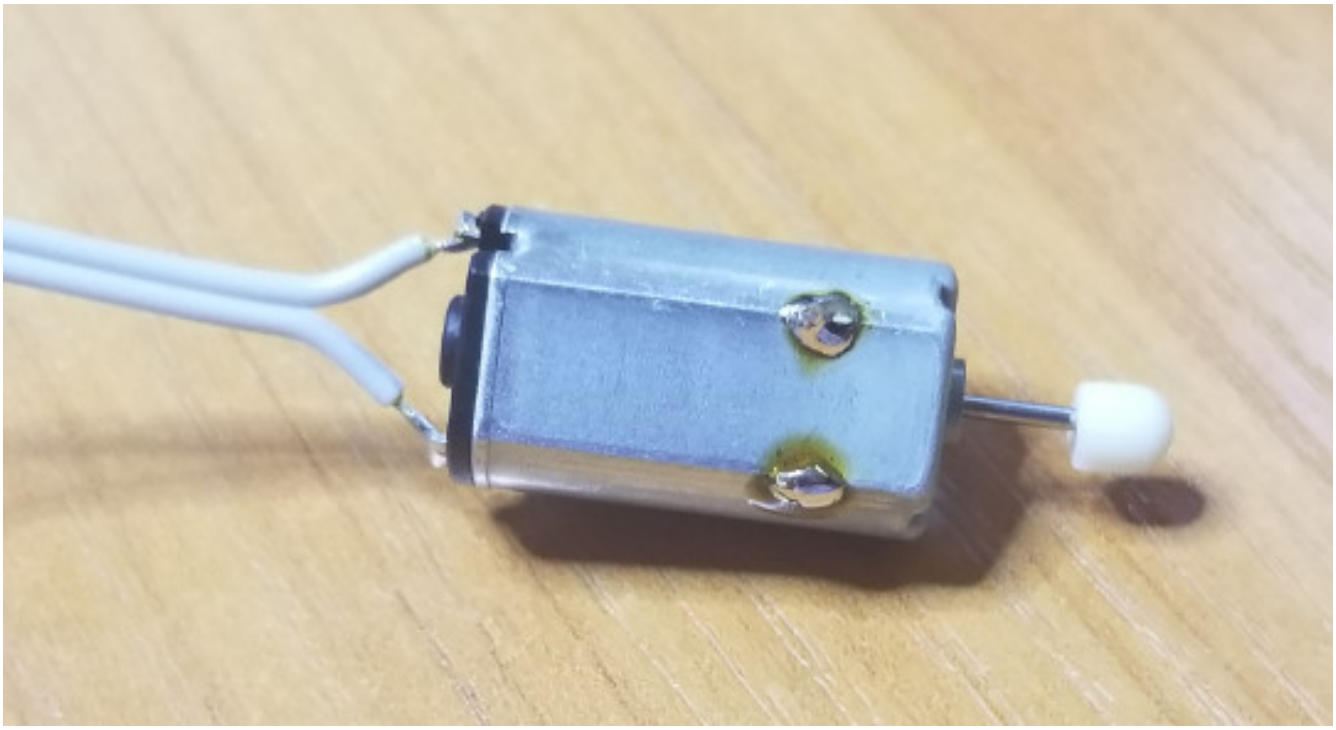

Then solder it at angle as seen in these pictures, note polarity – the motor has + and – marked on the body:

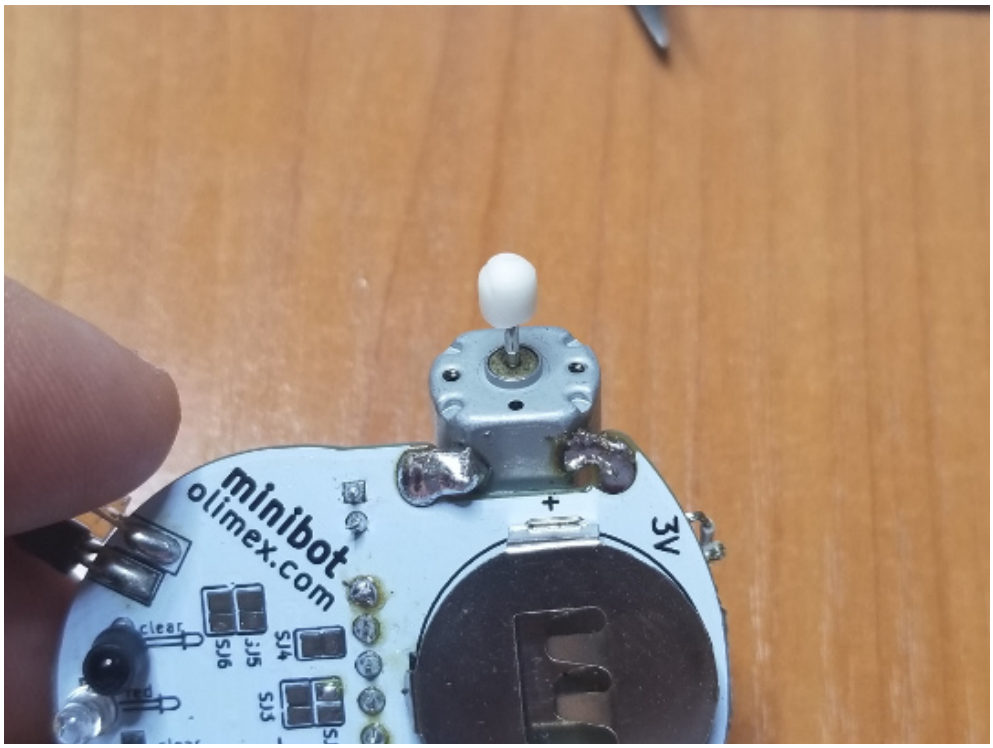

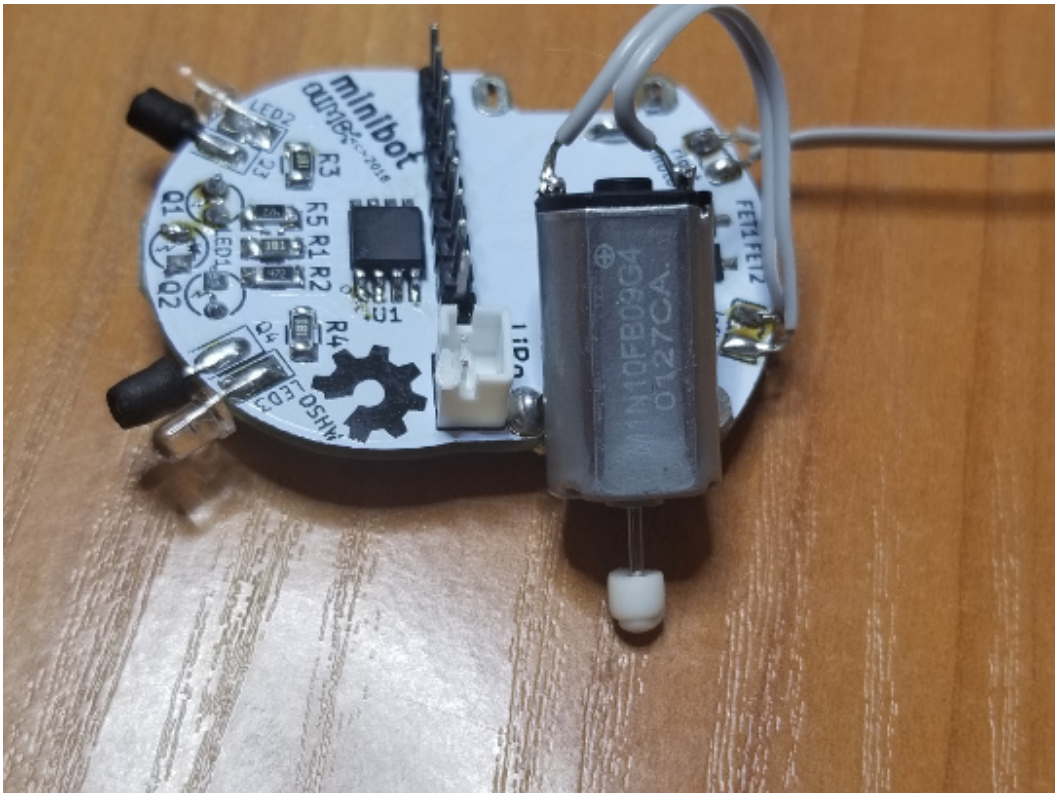

At the bottom side there are two solder jumpers SJ3 and SJ5 to be closed with solder joint:



Power supply

3V Lithium battery may be used to power the robot, but we do recommend Li-Po 3.7V battery like https://www.olimex.com/Products/Power/BATTERY-LIPO250mAh/ as it may be re-charged and re-used. The battery is not included in the kit.

Programming the board

The board has no USB connector so you need to use the EXT1 header to access the required data signals D- and D+ and also the power signals VBUS and GND. Refer to the schematic (either stand alone or the one in the beginning of this document) to see it very clear.

We use a small extension board with battery charger and micro USB connector for the task – we attach it to the EXT1 connector, it is called MINIBOT-charger and the design can be seen here:

https://github.com/OLIMEX/Minibot/tree/master/HARDWARE/charger

The design of the charger shows how a micro USB connector can be soldered. You might want to search for a cable that has male USB connector at one end, and free wires at the other end. It would be nice if the cable description also says which cable which signals is. If you can't find such a cable you would need to cut one I guess. Then use D-, D+, BAT+, and GND from the EXT1 connector. This is not sufficient though, you need to also connect D- to VBUS via 1.5K Ohm resistor, as seen in the schematic of the *MINIBOT-charger* board, 22R Ohm on the data lines are also a nice protection touch. For this you might want to use a breadboard and jumper wires if you don't want to solder.

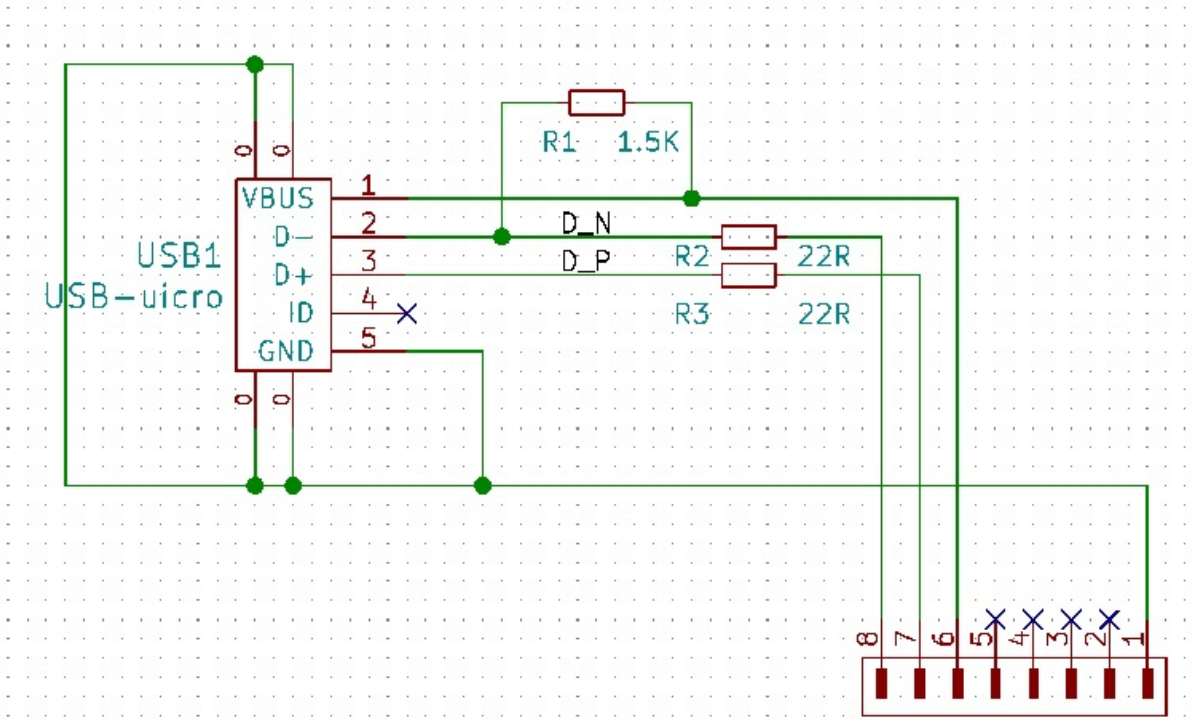

Important! Trace carefully the pins! Whether it is 8 pins or 9 pins!

Important! Remember to disconnect the battery when you have established USB connection programming! Else there will be short-circuit between the 5V coming from the USB port and the battery.

Software installation

All instructions below are for Ubuntu, but Windows installation is similar:

1. Download latest Arduino from www.arduino.cc
2. Extract the archive to your Home directory. Run terminal and go to arduino directory and execute arduino script as superuser

$ sudo ./arduino

2. From File menu select Preferences:

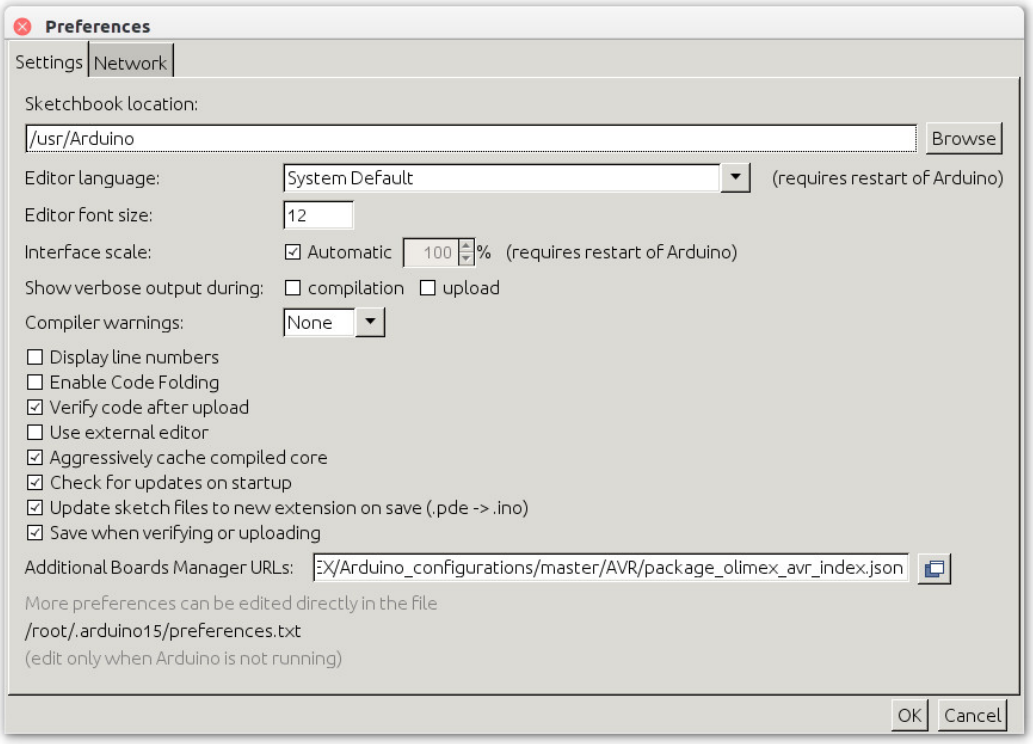

In Additional Boards Manager URLs paste this:

https://raw.githubusercontent.com/OLIMEX/Arduino_configurations/master/AVR/package_olimex_avr_index.json

Then from menu Tools → Board → Boards Manager select OLIMEX AVR boards: then select Olimexino-85 as Board.

From GitHub you can download the software examples:

https://github.com/OLIMEX/Minibot/SOFTWARE

Revision History

1.0 initial

2.0 added a lot of information about the USB and the battery