ER5018

SpeedSPEC www.sti.com ER5018

Compact Rope Pull Emergency Stop Switch

- Compact size allows this switch to be used on smaller machines with a mounting width of 40 mm (1.57 in.) and covering rope spans up to 40 m (131 ft.)
- Tension indicator—the tension indicator makes the system easy to set up and to maintain the proper rope tension
- Contact arrangements of 2 N/C + 1 N/O or 3 N/C
- IP67 (NEMA 6) enclosure enables the ER5018 switch to withstand water washdown cleaning
- Heavy-duty housing—the die-cast housing and stainless steel eye nut makes the ER5018 suitable for demanding industrial applications
- Integral E-Stop—the optional E-stop provides emergency stopping at the extreme end of the installation
- Reset button—the blue reset button must be pushed in order to return to "machine run" condition following switch actuation by a pulled or slacked rope
- Vibration tolerant—the snap-acting switch contacts protect against nuisance tripping due to vibration



Conforms to IEC947-5-1, IEC947-5-5, EN418, UL508, BS5304
UL and C-UL listed, TUV certified

G

Specifications

Electrical	**All Models**
Contact Configurations:	2 N/C + 1 N/O, 3 N/C
Safety Contacts:	2 N/C, 3 N/C
Switching Ability	AC: 120 V–6 A, 240 V–3 A, Inductive DC: 24 V–2.5 A, Inductive
Auxiliary Contacts:	1 N/O
Max Switching Current/Volt/Amp:	240 V/720 VA
Minimum Current:	5 V 5 mA DC
Electrical Life:	1 x 10^6 minimum
Mechanical	
Mounting:	Any position
Mounting Hardware:	2 x M5 screws
Max Rope Span:	40 m (131 ft.)
Operation Force:	< 125 N (28 lb.)
Tensioning Force to Run Position:	130 N (23 lb.) typical
Case Material:	Die-cast aluminum alloy
Eye Nut Material:	Stainless steel
Wiring Entry:	3 x M20 or 3 x 0.5 in. NPT
Weight:	675 g (23.8 oz.)
Color:	Yellow
Mechanical Life:	1 x 10^6 minimum
Environmental	
Protection:	IP67 (NEMA 6)
Operating Temperature:	-25 to 80°C (-13 to 176°F)
Cleaning:	Water washdown
Compliance	
Standards:	IEC947-5-1, IEC947-5-5, EN418, UL508, BS5304
Approvals/Listings:	CE marked for all applicable directives, UL and C-UL, TUV

Specifications are subject to change without notice.

Note: The safety contacts of the Omron STI switches are described as normally closed (N/C)—i.e., with the rope properly tensioned and the machine able to be started.

Operation



Blue Reset Knob
A blue reset button is provided to easily return the unit back to its machine-run position after actuation.



Emergency Push Button
The emergency push button may be installed or repositioned in the field. The ER5018 has two possible mounting positions for the emergency stop button.

Installation Hardware Available



RK Rope Tension Kit
The RK Rope Tension Kit comes with all of the required hardware for most installations. A spring is required as shown in the installation example below.

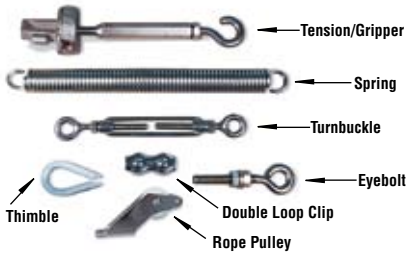

Installation Hardware
Individual hardware items may be purchased for specific installation requirements.

Contact Arrangements

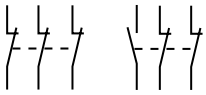

	0 mm / 0 in	3.5 / 0.14		14.5 / 0.57	17.0 / 0.67
2NC + 1NO Versions	Rope Slack		Tension Range		Rope Pulled
11/12			■		
21/22			■		
33/34	■				■

3NC Versions	Rope Slack		Tension Range		Rope Pulled
11/12			■		
21/22			■		
31/32			■		

□ Contact Open ■ Contact Closed

Mounting Specification

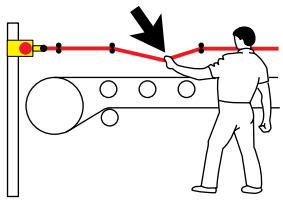

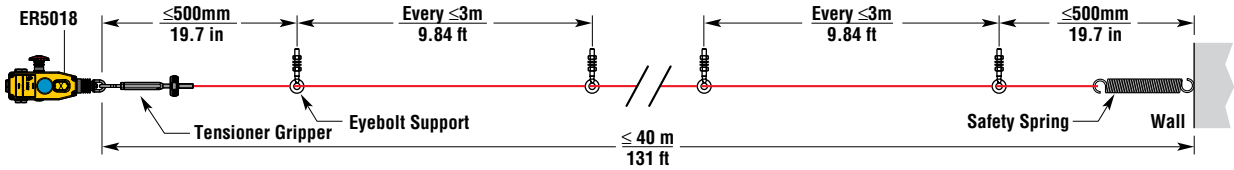

Note: Some installations may require a ER5018 on each end.

For a guide to installing, see “Proper Installation of Rope or Wire Pull Switches” in The Safety Library Section of this catalog.

OMRON SCIENTIFIC TECHNOLOGIES, INC.
USA Tel. 1/888/510-4357 Canada Tel. 1/866/986-6766
For the Latest Information
On the Internet: www.sti.com or www.omron.ca

Dimensions

(mm/in.)

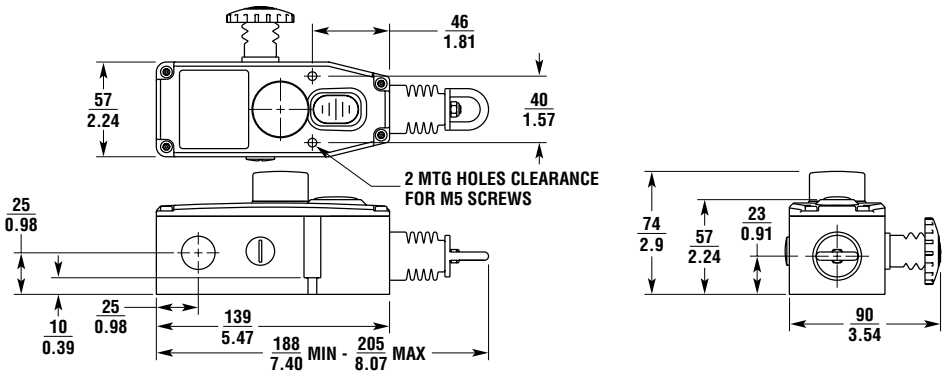

Applications

Typical applications are on conveyor systems and across rotating machinery, and around hazardous areas.

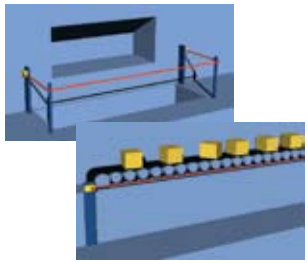

Ordering

Model	E-Stop	Contacts	Wiring Entry	Part No.
ER5018-021M	Not included	2 N/C + 1 N/O	3 x M20	44506-4010
ER5018-021N	Not included	2 N/C + 1 N/O	3 x 1/2 in. NPT	44506-4020
ER5018-030M	Not included	3 N/C	3 x M20	44506-4030
ER5018-030N	Not included	3 N/C	3 x 1/2 in. NPT	44506-4040
ER5018-021ME	Included	2 N/C + 1 N/O	3 x M20	44506-4110
ER5018-021NE	Included	2 N/C + 1 N/O	3 x 1/2 in. NPT	44506-4120
ER5018-030ME	Included	3 N/C	3 x M20	44506-4130
ER5018-030NE	Included	3 N/C	3 x 1/2 in. NPT	44506-4140

Accessories	Part No.
SM06-SL400, Replacement Lid	44506-3700
RK5, 5 m Rope Kit, Stainless Steel	44506-2705
RK10, 10 m Rope Kit, Stainless Steel	44506-2710
RK15, 15 m Rope Kit, Stainless Steel	44506-2715
RK20, 20 m Rope Kit, Stainless Steel	44506-2720
RK30, 30 m Rope Kit, Stainless Steel	44506-2730
RK50, 50 m Rope Kit, Stainless Steel	44506-2750
R5M, 5 m Rope Only	44506-3705
R10M, 10 m Rope Only	44506-3710
R20M, 20 m Rope Only	44506-3720
R30M, 30 m Rope Only	44506-3730
R50M, 50 m Rope Only	44506-3750
R80M, 80 m Rope Only	44506-3780
R100M, 100 m Rope Only	44506-3711
R126M, 126 m Rope Only	44506-3726

Accessories	Part No.
SMO6-TK00, Tensioner Kit (Turnbuckle, 8 Rope Grips & 4 Thimbles)	44506-0700
SM06-TG00, Tensioner Gripper, Stainless Steel	44506-4700
SM06-EB10, Eye Bolt Stainless Steel, 8 per pack	44506-4710
SM06-EB20, Eye Bolt Stainless Steel, 8 per pack	44506-0720
SM06-DL20, Double Loop Clip, Stainless Steel, 4 per pack	44506-4720
SM06-DL21, Double Loop Clip, Galvanized, 4 per pack	44506-4721
SM06-THSS, Thimble Stainless Steel, 4 per pack	44506-4770
SM06-THGV, Thimble Galvanized, 4 per pack	44506-4771
SM06-TB30, Turnbuckle, Stainless Steel	44506-4730
SM06-TB31, Turnbuckle, Galvanized	44506-4731
SM06-SP30, Spring Stainless Steel	44506-0730
SM06-SP50, Spring, Stainless Steel	44506-4750
SM06-RPSS, Rope Pulley, Stainless Steel	44506-4780
SM06-ES60, E-Stop Mechanism	44506-4760

= Highlighted **Rapid Delivery** products are available for shipment today or within **FIVE** days.

ER6022

SpeedSPEC www.sti.com ER6022

Rope Pull Emergency Stop Switch

- Long rope spans up to 80 m (262 ft.) means fewer number of switches required per application
- Tension indicator—the tension indicator makes the system easy to set up and to maintain the proper rope tension
- Contact arrangements of 2 N/C + 1 N/O, 3 N/C + 1 N/O or 2 N/C + 2 N/O
- IP67 (NEMA 6) enclosure enables the ER6022 switch to withstand water washdown cleaning
- Reset button—the blue reset button must be pushed in order to return to "machine run" condition following switch actuation by a pulled or slacked rope
- Indicator beacon—the optional dual indicator beacon, available in 24 VDC or 120 VAC, can be wired to flash red to indicate a tripped switch or glow a constant green to indicate a properly reset switch
- E-stop button—the ER6022 has two mounting positions where the optional E-stop button may be installed; the E-stop button may be added or replaced in the field



Conforms to IEC947-5-1, IEC947-5-5, EN418, UL508, BS5304
UL and C-UL listed, TUV certified

G

Specifications

Electrical	All Models
Contact Configurations:	2 N/C + 1 N/O, 3 N/C + 1 N/O, 2 N/C + 2 N/O
Safety Contacts:	2 N/C, 3 N/C
Switching Ability	AC: 240 V–3 A, 120 V–6 A, Inductive, DC: 24 V–2.5 A, Inductive
Auxiliary Contacts:	1 N/O, 2 N/O
Max Switching Current/Volt/Amp:	240 V/720 VA
Minimum Current:	5 V 5 mA DC
Electrical Life:	1 x 10^6 minimum
MECHANICAL	
LED Indicator Beacon:	24 VDC, 120 VAC
Mechanical	1 million minimum
Mounting:	Any position
Mounting Hardware:	4 x M5 screws
Max Rope Span:	80 m (262 ft.)
Operation Force:	< 125 N (28 lb.)
Tensioning Force to Run Position:	130 N (23 lb.) typical
Case Material:	Die-cast aluminum alloy
Eye Nut Material:	Stainless steel
Wiring Entry:	3 x M20 or 3 x 0.5 in. NPT
Weight:	880 g (31 oz.)
Color:	Yellow
Mechanical Life:	1 x 10^6 minimum
Environmental	
Protection:	IP67 (NEMA 6)
Operating Temperature:	-25 to 80°C (-13 to 176°F)
Cleaning:	Water washdown
Compliance	
Standards:	IEC947-5-1, IEC947-5-5, EN418, UL508, BS5304
Approvals/Listings:	CE marked for all applicable directives, UL and C-UL, TUV

Specifications are subject to change without notice.

Note: The safety contacts of the Omron STI switches are described as normally closed (N/C)—i.e., with the rope properly tensioned and the machine able to be started.

OMRON SCIENTIFIC TECHNOLOGIES, INC.
USA Tel. 1/888/510-4357 **Canada** Tel. 1/866/986-6766

For the Latest Information
On the Internet: **www.sti.com** or **www.omron.ca**

OMRON

Operation



Blue Reset Knob
A blue reset button is provided to easily return the unit back to its machine-run position after actuation.



Emergency Push Button
The emergency push button may be installed or repositioned in the field. The ER6022 has two possible mounting positions for the emergency stop button.

Installation Hardware Available



RK Rope Tension Kit
The RK Rope Tension Kit comes with all of the required hardware for most installations. A spring is required as shown in the installation example below.

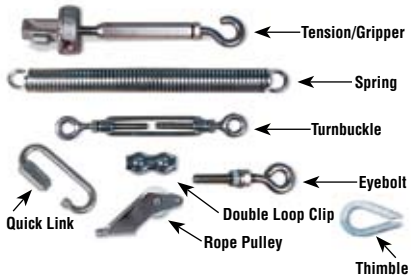

Installation Hardware
Individual hardware items may be purchased for specific installation requirements.

Contact Arrangements

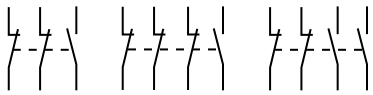

	0 mm / 0 in	3.5 / 0.14		14.5 / 0.57	17.0 / 0.67
2NC + 1NO Versions	Rope Slack		Tension Range		Rope Pulled
11/12					
21/22					
33/34					
3NC + 1NO Versions	Rope Slack		Tension Range		Rope Pulled
11/12					
21/22					
33/34					
43/44					
2NC + 2NO Versions	Rope Slack		Tension Range		Rope Pulled
11/12					
21/22					
33/34					
43/44					

□ Contact Open ■ Contact Closed

Mounting Specification

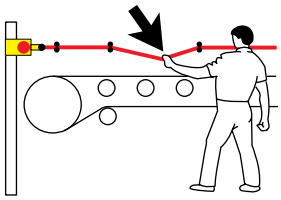

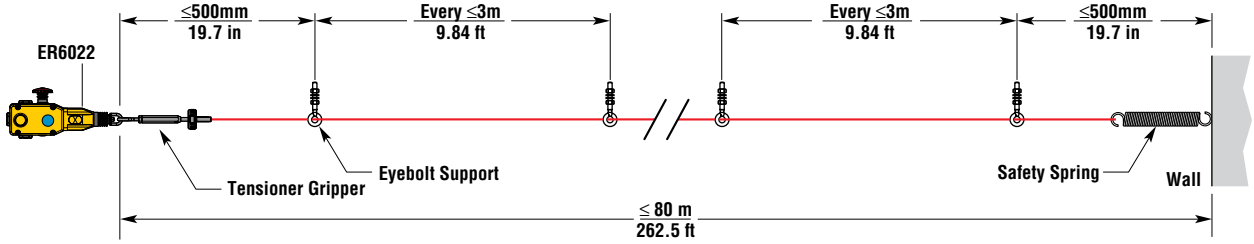

Note: Some installations may require a ER6022 on each end.

For a guide to installing, see "Proper Installation of Rope or Wire Pull Switches" in The Safety Library Section of this catalog.

Dimensions

(mm/in.)

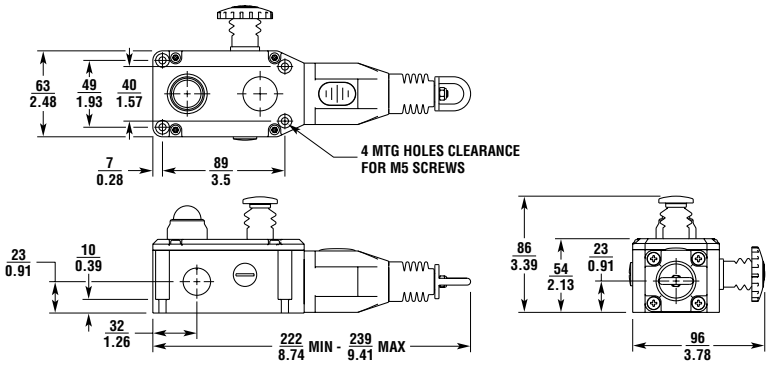

Applications

Typical applications are on conveyor systems and across rotating machinery, and around hazardous areas.

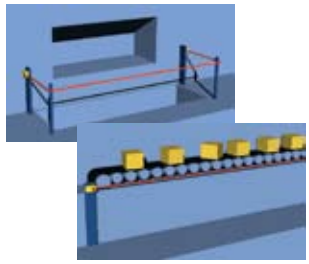

Ordering

Model	E-stop	Indicator Beacon	Contacts	Wiring Entry	Part No.
ER Switches with 3 pole contact blocks					
ER6022-021M	Not included	Not included	2 N/C + 1 N/O	3 x M20	44506-5010
ER6022-021N	Not included	Not included	2 N/C + 1 N/O	3 x 1/2 in. NPT	44506-5020
ER6022-021ME	Included	Not included	2 N/C + 1 N/O	3 x M20	44506-5210
ER6022-021NE	Included	Not included	2 N/C + 1 N/O	3 x 1/2 in. NPT	44506-5220
ER6022-021MEL	Included	Included	2 N/C + 1 N/O	3 x M20	44506-5410
ER6022-021NEL	Included	Included	2 N/C + 1 N/O	3 x 1/2 in. NPT	44506-5420
ER6022-021NELAC	Included	Included, 120VAC	2 N/C + 1 N/O	1/2" NPT	44506-5423
ER Switches with 4 pole contact blocks					
ER6022-031M	Not included	Not included	3 N/C + 1 N/O	M20	44506-5050
ER6022-031N	Not included	Not included	3 N/C + 1 N/O	1/2 in. NPT	44506-5060
ER6022-022M	Not included	Not included	2 N/C + 2 N/O	M20	44506-5070
ER6022-022N	Not included	Not included	2 N/C + 2 N/O	1/2 in. NPT	44506-5080
ER6022-031ML	Not included	Included, 24 VDC	3 N/C + 1 N/O	M20	44506-5150
ER6022-031NL	Not included	Included, 24 VDC	3 N/C + 1 N/O	1/2 in. NPT	44506-5160
ER6022-022ML	Not included	Included, 24 VDC	2 N/C + 2 N/O	M20	44506-5170
ER6022-022NL	Not included	Included, 24 VDC	2 N/C + 2 N/O	1/2 in. NPT	44506-5180
ER6022-031ME	Included	Not included	3 N/C + 1 N/O	M20	44506-5250
ER6022-031NE	Included	Not included	3 N/C + 1 N/O	1/2 in. NPT	44506-5260
ER6022-022ME	Included	Not included	2 N/C + 2 N/O	M20	44506-5270
ER6022-022NE	Included	Not included	2 N/C + 2 N/O	1/2 in. NPT	44506-5280
ER6022-031MEL	Included	Included, 24 VDC	3 N/C + 1 N/O	M20	44506-5450
ER6022-031NEL	Included	Included, 24 VDC	3 N/C + 1 N/O	1/2 in. NPT	44506-5460
ER6022-022MEL	Included	Included, 24 VDC	2 N/C + 2 N/O	M20	44506-5470
ER6022-022NEL	Included	Included, 24 VDC	2 N/C + 2 N/O	1/2 in. NPT	44506-5480
ER6022-031NELAC	Included	Included, 120 VAC	3 N/C + 1 N/O	1/2 in. NPT	44506-5463
ER6022-022NELAC	Included	Included, 120 VAC	2 N/C + 2 N/O	1/2 in. NPT	44506-5483

Accessories	Part No.
SM06-SL500, Replacement Lid 24 VDC	44506-5700
SM06-SL510, Replacement Lid/LED 24 VDC	44506-5710
SM06-SL510AC, Replacement Lid/LED 120 VAC (consult factory for complete switch with 120 VAC beacon)	44506-5711
RK5, 5 m Rope Kit, Stainless Steel	44506-2705
RK10, 10 m Rope Kit, Stainless Steel	44506-2710
RK15, 15 m Rope Kit, Stainless Steel	44506-2715
RK20, 20 m Rope Kit, Stainless Steel	44506-2720
RK30, 30 m Rope Kit, Stainless Steel	44506-2730
RK50, 50 m Rope Kit, Stainless Steel	44506-2750
RK80, 80 m Rope Kit, Stainless Steel	44506-2780
R5M, 5 m Rope Only	44506-3705
R10M, 10 m Rope Only	44506-3710
R20M, 20 m Rope Only	44506-3720
R30M, 30 m Rope Only	44506-3730
R50M, 50 m Rope Only	44506-3750
R80M, 80 m Rope Only	44506-3780
R100M, 100 m Rope Only	44506-3711
R126M, 126 m Rope Only	44506-3726

Accessories	Part No.
SM06-TK00, Tensioner Kit (Turnbuckle, 8 Rope Grips & 4 Thimbles)	44506-0700
SM06-TG00, Tensioner Gripper, Stainless Steel	44506-4700
SM06-EB10, Eye Bolt Stainless Steel, 8 per pack	44506-4710
SM06-EB20, Eye Bolt	44506-0720
SM06-DL20, Double Loop Clip, Stainless Steel, 4 per pack	44506-4720
SM06-DL21, Double Loop Clip, Galvanized, 4 per pack	44506-4721
SM06-THSS, Thimble Stainless Steel, 4 per pack	44506-4770
SM06-THGV, Thimble Galvanized, 4 per pack	44506-4771
SM06-QLSS, Quick Link Stainless Steel	44506-4772
SM06-TB30, Turnbuckle, Stainless Steel	44506-4730
SM06-TB31, Turnbuckle, Galvanized	44506-4731
SM06-SP30, Spring	44506-0730
SM06-SP50, Spring, Stainless Steel	44506-4750
SM06-RPSS, Rope Pulley, Stainless Steel	44506-4780
SM06-ES60, E-Stop Mechanism	44506-4760
SM06-LF40, Replacement LED Indicator Beacon, 24 VDC	44506-4740
SM06-LF41, Replacement LED Indicator Beacon, 120 VAC	44506-4741

= Highlighted **Rapid Delivery** products are available for shipment today or within **FIVE** days.

OMRON SCIENTIFIC TECHNOLOGIES, INC.
USA Tel. 1/888/510-4357 **Canada** Tel. 1/866/986-6766

For the Latest Information
On the Internet: **www.sti.com** or **www.omron.ca**

XER6022-SS

SpeedSPEC www.sti.com XER6022SS

Explosion-Proof Stainless Steel Rope Pull Emergency Stop Switch

- Long rope spans up to 100 m (328 ft.) means fewer number of switches required per application
- Tension indicator maintains the proper rope tension
- Contact arrangements of 3 N/C + 1 N/O or 2 N/C + 2 N/O
- IP67 (NEMA 6) enclosure withstands water washdown cleaning
- 316 stainless steel cast housing and stainless steel hardware
- Reset button—the blue reset button must be pushed in order to return to "machine run" condition following switch actuation by a pulled or slacked rope
- Vibration tolerant—the snap-acting switch contacts protect against nuisance tripping due to vibration
- Optional E-stop button—may be added or replaced in the field



CE

Conforms to IEC947-5-1, IEC947-5-5, EN418, UL508, BS5304

Specifications

Electrical	**XER6022-SS**
Ex Classification:	II 2 G EEx d II C T6
Certification:	PTB 00 ATEX 1093X IBExU 01 ATEX 1007X
Contact Configurations:	1 N/C + 1 N/O, 2 N/C
Safety Contacts:	1 N/C, 2 N/C
Switching Ability	250 V—3 A, 125 V—3A, Inductive 30 V—5 A, Inductive
Auxiliary Contacts:	1 N/O
Max Switching Current/Volt/Amp:	240 V/720 VA
Minimum Current:	5 V 5 mA DC
Electrical Life:	1 x 10^6 minimum
LED Indicator Beacon:	N/A
Mechanical	
Mounting:	Any position
Mounting Hardware:	4 x M5 screws
Max Rope Span:	100 m (328 ft.)
Operation Force:	< 125 N (28 lb.)
Tensioning Force to Run Position:	130 N (23 lb.) typical
Case Material:	316 stainless steel casting
Eye Nut Material:	Stainless steel
Wiring Entry:	3 m cable
Weight:	1750 g (62 oz.)
Color:	Natural
Mechanical Life:	1 x 10^6 minimum
Environmental	
Protection:	IP67 (NEMA 6)
Operating Temperature:	-25 to 80°C (-13 to 176°F)
Cleaning:	Water washdown
Compliance	
Standards:	IEC947-5-1, IEC947-5-5, EN418, UL508, BS5304
Approvals/Listings:	CE marked for all applicable directives (UL and C-UL pending, TUV pending)

Specifications are subject to change without notice.

Note: The safety contacts of the Omron STI switches are described as normally closed (N/C)—i.e., with the rope properly tensioned and the machine able to be started.

Operation



Blue Reset Knob
A blue reset button is provided to easily return the unit back to its machine-run position after actuation.



Emergency Push Button
The emergency push button may be installed or repositioned in the field. The XER6022-SS has two possible mounting positions for the emergency stop button. To assure compliance with all applicable European and Canadian standards, the supplied yellow background label must be applied.

Installation Hardware Available



RK Rope Tension Kit
The RK Rope Tension Kit comes with all of the required hardware for most installations. A spring is required as shown in the installation example below.

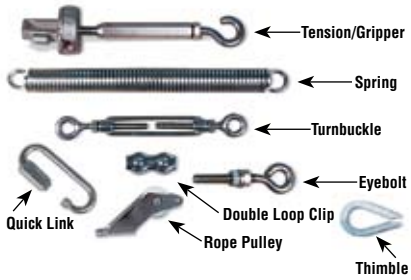

Installation Hardware
Individual hardware items may be purchased for specific installation requirements.

Contact Arrangements

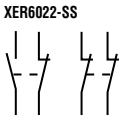

XER6022-SS	0 mm / 0 in	3.5 / 0.14	14.5 / 0.57	17.0 / 0.67
2NC Versions	Rope Slack	Tension Range		Rope Pulled
Brown/Blue		■	■	
Black/Black		■	■	

1NC + 1 NO Versions	Rope Slack	Tension Range	Rope Pulled
Brown/Blue		■	
Black/Black	■		■

□ Contact Open ■ Contact Closed

Mounting Specification

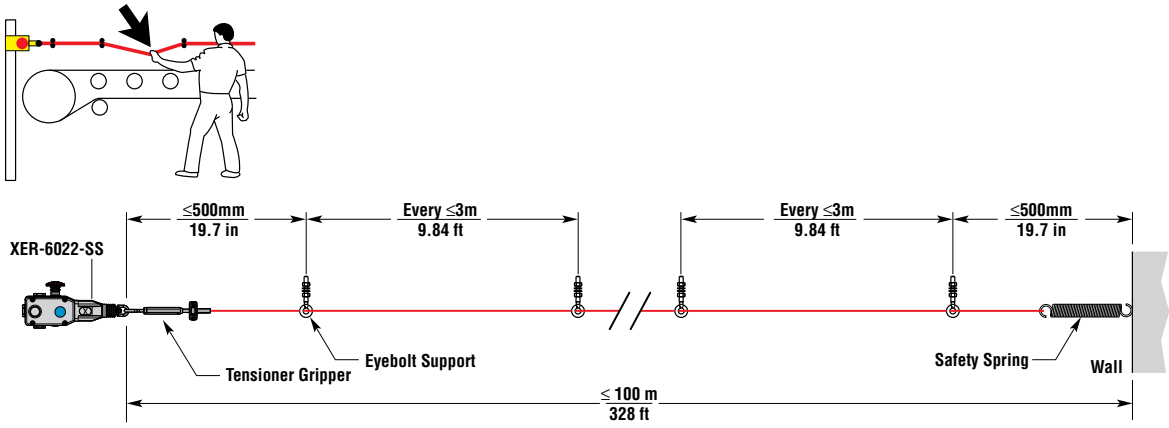

Note: Some installations may require a XER6022-SS on each end.

For a guide to installing, see “Proper Installation of Rope or Wire Pull Switches” in the Safety Library Section of this catalog.

OMRON SCIENTIFIC TECHNOLOGIES, INC.
USA Tel. 1/888/510-4357 Canada Tel. 1/866/986-6766

For the Latest Information
On the Internet: www.sti.com or www.omron.ca

Dimensions

(mm/in.)

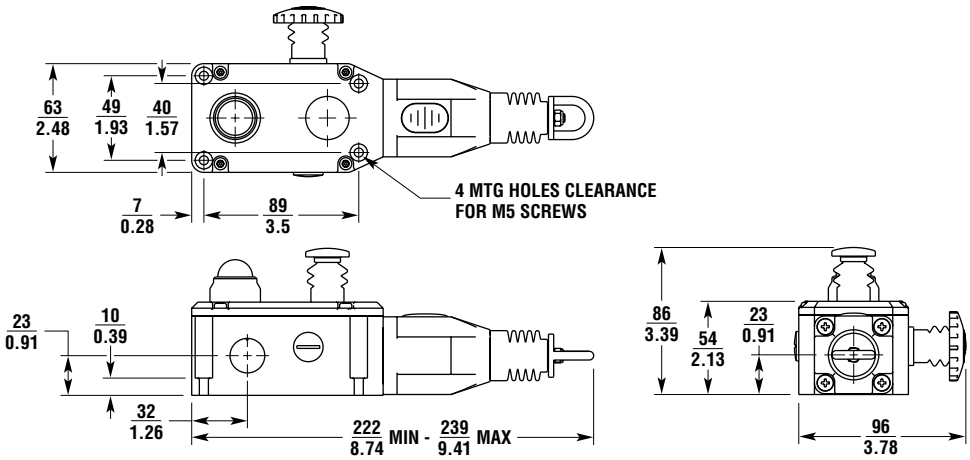

Applications

Typical applications are on conveyor systems and across rotating machinery, and around hazardous areas.

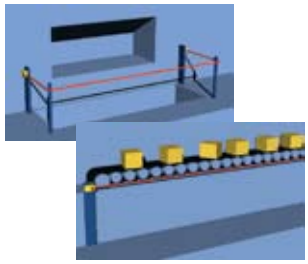

Ordering

Model	E-Stop	Indicator Beacon	Contacts	Wiring Entry	Part No.
XER6022-011C3	Not included	N/A	1 N/C + 1 N/O	3 m cable	44506-5600
XER6022-011C3SS	Not included	N/A	1 N/C + 1 N/O	3 m cable	44506-5610
XER6022-020C3SS	Not included	N/A	2 N/C	3 m cable	44506-5620

Accessories	Part No.
SM06-SLXER6022SS, Replacement Lid for ER6022-SS and XER6022-SS without LED	44506-5730
RK5, 5 m Rope Kit, Stainless Steel	44506-2705
RK10, 10 m Rope Kit, Stainless Steel	44506-2710
RK15, 15 m Rope Kit, Stainless Steel	44506-2715
RK20, 20 m Rope Kit, Stainless Steel	44506-2720
RK30, 30 m Rope Kit, Stainless Steel	44506-2730
RK50, 50 m Rope Kit, Stainless Steel	44506-2750
RK80, 80 m Rope Kit, Stainless Steel	44506-2780
R5M, 5 m Rope Only	44506-3705
R10M, 10 m Rope Only	44506-3710
R20M, 20 m Rope Only	44506-3720
R30M, 30 m Rope Only	44506-3730
R50M, 50 m Rope Only	44506-3750
R80M, 80 m Rope Only	44506-3780
R100M, 100 m Rope Only	44506-3711
R126M, 126 m Rope Only	44506-3726

Accessories	Part No.
SM06-TK00, Tensioner Kit (Turnbuckle, 8 Rope Grips, & 4 Thimbles)	44506-0700
SM06-TG00, Tensioner Gripper, Stainless Steel	44506-4700
SM06-EB10, Eye Bolt Stainless Steel, 8 per pack	44506-4710
SM06-EB20, Eye Bolt	44506-0720
SM06-DL20, Double Loop Clip, Stainless Steel, 4 per pack	44506-4720
SM06-DL21, Double Loop Clip, Galvanized, 4 per pack	44506-4721
SM06-THSS, Thimble Stainless Steel, 4 per pack	44506-4770
SM06-THGV, Thimble Galvanized, 4 per pack	44506-4771
SM06-QLSS, Quick Link Stainless Steel	44506-4772
SM06-TB30, Turnbuckle, Stainless Steel	44506-4730
SM06-TB31, Turnbuckle, Galvanized	44506-4731
SM06-SP30, Spring	44506-2705
SM06-SP50, Spring, Stainless Steel	44506-4750
SM06-RPSS, Rope Pulley, Stainless Steel	44506-4780
SM06-ES60, E-Stop Mechanism	44506-4760
SM06-YLES, Yellow E-Stop Background Label	44506-4791
SM06-LF40, Replacement LED Indicator Beacon, 24 VDC	44506-4740
SM06-LF41, Replacement LED Indicator Beacon, 120 VAC	44506-4741

= Highlighted **Rapid Delivery** products are available for shipment today or within **FIVE** days.

ER6022-SS

SpeedSPEC www.sti.com ER6022SS

Stainless Steel Rope Pull Emergency Stop Switch

- Long rope spans up to 100 m (328 ft.) means fewer number of switches required per application
- Tension indicator maintains the proper rope tension
- Contact arrangements of 3 N/C + 1 N/O or 2 N/C + 2 N/O
- IP67 (NEMA 6) enclosure withstands water washdown cleaning
- 316 stainless steel cast housing and stainless steel hardware
- Reset button—the blue reset button must be pushed in order to return to "machine run" condition following switch actuation by a pulled or slacked rope
- Vibration tolerant—the snap-acting switch contacts protect against nuisance tripping due to vibration
- Indicator beacon—the dual indicator beacon is optional on the ER6022-SS; the indicator beacon can be wired to flash red to indicate a tripped switch or glow a constant green to indicate a properly reset switch
- Optional E-stop button—may be added or replaced in the field



Conforms to IEC947-5-1, IEC947-5-5, EN418, UL508, BS5304
UL and C-UL listed, TUV certified

Specifications

Electrical	ER6022-SS
Contact Configurations:	3 N/C + 1 N/O, 2 N/C + 2 N/O
Safety Contacts:	2 N/C, 3 N/C
Switching Ability	AC: 240 V–3 A, 120 V–6 A, Inductive DC: 24 V–2.5 A, Inductive
Auxiliary Contacts:	1 N/O, 2 N/O
Max Switching Current/Volt/Amp:	240 V/720 VA
Minimum Current:	5 V 5 mA DC
Electrical Life:	1 x 10^6 minimum
LED Indicator Beacon:	24 VDC
Mechanical	
Mounting:	Any position
Mounting Hardware:	4 x M5 screws
Max Rope Span:	100 m (328 ft.)
Operation Force:	< 125 N (28 lb.)
Tensioning Force to Run Position:	130 N (23 lb.) typical
Case Material:	Die-cast aluminum alloy
Eye Nut Material:	Stainless steel
Wiring Entry:	3 x M20 or 3 x 0.5 in. NPT
Weight:	880 g (31 oz.)
Color:	Natural
Mechanical Life:	1 x 10^6 minimum
Environmental	
Protection:	IP67 (NEMA 6)
Operating Temperature:	-25 to 80°C (-13 to 176°F)
Cleaning:	Water washdown
Compliance	
Standards:	IEC947-5-1, IEC947-5-5, EN418, UL508, BS5304
Approvals/Listings:	CE marked for all applicable directives (UL and C-UL, TUV)

Specifications are subject to change without notice.

Note: The safety contacts of the Omron STI switches are described as normally closed (N/C)—i.e., with the rope properly tensioned and the machine able to be started.

Operation



Blue Reset Knob
A blue reset button is provided to easily return the unit back to its machine-run position after actuation.



Emergency Push Button
The emergency push button may be installed or repositioned in the field. The ER6022-SS has two possible mounting positions for the emergency stop button. To assure compliance with all applicable European and Canadian standards, the supplied yellow background label must be applied.

Installation Hardware Available



RK Rope Tension Kit
The RK Rope Tension Kit comes with all of the required hardware for most installations. A spring is required as shown in the installation example below.

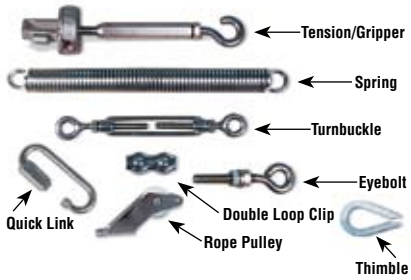

Installation Hardware
Individual hardware items may be purchased for specific installation requirements.

Contact Arrangements

ER6022-SS

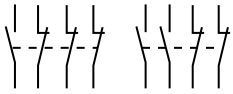

ER6022-SS	0 mm / 0 in	3.5 / 0.14	14.5 / 0.57	17.0 / 0.67
3NC + 1NO Versions	Rope Slack	Tension Range		Rope Pulled
11/12				
21/22				
33/34				
43/44				

2NC + 2NO Versions	Rope Slack	Tension Range	Rope Pulled
11/12			
21/22			
33/34			
43/44			

Mounting Specification

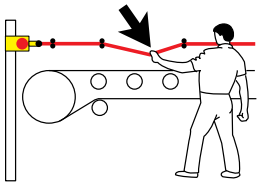

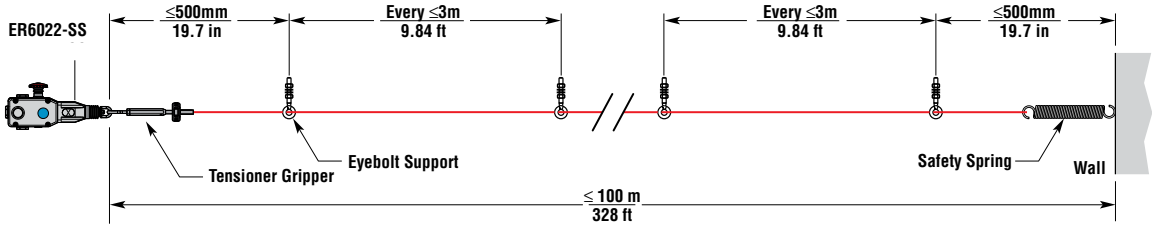

Note: Some installations may require a ER6022-SS on each end.

For a guide to installing, see “Proper Installation of Rope or Wire Pull Switches” in The Safety Library Section of this catalog.

OMRON SCIENTIFIC TECHNOLOGIES, INC.
USA Tel. 1/888/510-4357 Canada Tel. 1/866/986-6766

For the Latest Information
On the Internet: www.sti.com or www.omron.ca

Dimensions

(mm/in.)

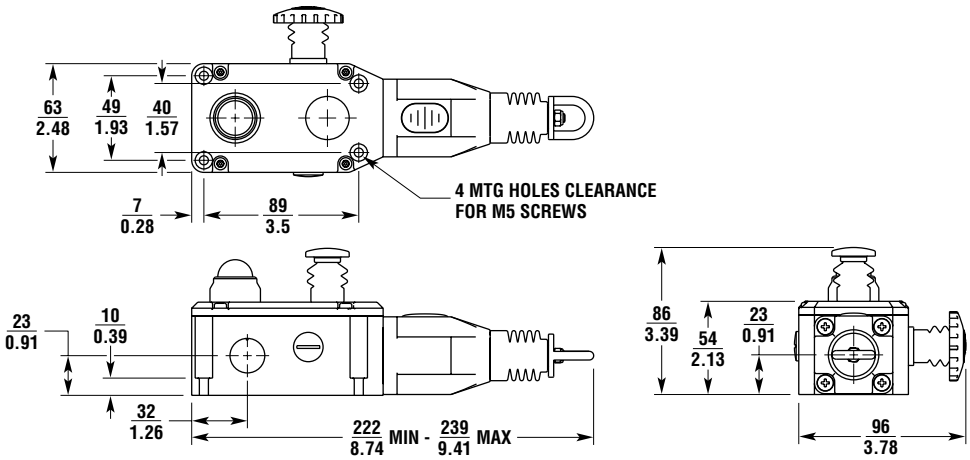

Applications

Typical applications are on conveyor systems and across rotating machinery, and around hazardous areas.

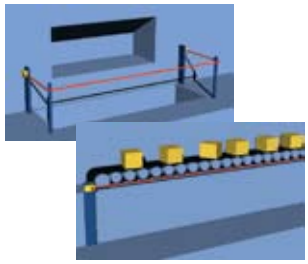

Ordering

Model	E-Stop	Indicator Beacon	Contacts	Wiring Entry	Part No.
ER6022-022MSS	Not included	Not included	2 N/C + 2 N/O	3 x M20	44506-5810
ER6022-022NSS	Not included	Not included	2 N/C + 2 N/O	3 x 1/2 in. NPT	44506-5820
ER6022-031MSS	Not included	Not included	3 N/C + 1 N/O	3 x M20	44506-5830
ER6022-031NSS	Not included	Not included	3 N/C + 1 N/O	3 x 1/2 in. NPT	44506-5840
ER6022-022MESS	Included	Not included	2 N/C + 2 N/O	3 x M20	44506-5850
ER6022-022NESS	Included	Not included	2 N/C + 2 N/O	3 x 1/2 in. NPT	44506-5860
ER6022-031MESS	Included	Not included	3 N/C + 1 N/O	3 x M20	44506-5870
ER6022-031NESS	Included	Not included	3 N/C + 1 N/O	3 x 1/2 in. NPT	44506-5880
ER6022-022MLSS	Not included	Included (24 VDC)	2 N/C + 2 N/O	3 x M20	44506-5910
ER6022-022NLSS	Not included	Included (24 VDC)	2 N/C + 2 N/O	3 x 1/2 in. NPT	44506-5920
ER6022-031MLSS	Not included	Included (24 VDC)	3 N/C + 1 N/O	3 x M20	44506-5930
ER6022-031NLSS	Not included	Included (24 VDC)	3 N/C + 1 N/O	3 x 1/2 in. NPT	44506-5940
ER6022-022MELSS	Included	Included (24 VDC)	2 N/C + 2 N/O	3 x M20	44506-5950
ER6022-022NELSS	Included	Included (24 VDC)	2 N/C + 2 N/O	3 x 1/2 in. NPT	44506-5960
ER6022-031MELSS	Included	Included (24 VDC)	3 N/C + 1 N/O	3 x M20	44506-5970
ER6022-031NELSS	Included	Included (24 VDC)	3 N/C + 1 N/O	3 x 1/2 in. NPT	44506-5980

Accessories	Part No.
SM06-SLXER6022SS, Replacement Lid for ER6022-SS and XER6022-SS without LED	44506-5730
SM06-SLER6022LSS, Replacement Lid for ER6022-SS with LED 24 VDC	44506-5740
SM06-SLER6022LSSAC, Replacement Lid for ER6022-SS with LED 120 VAC (consult factory for complete switch with 120 VAC beacon)	44506-5741
RK5, 5 m Rope Kit, Stainless Steel	44506-2705
RK10, 10 m Rope Kit, Stainless Steel	44506-2710
RK15, 15 m Rope Kit, Stainless Steel	44506-2715
RK20, 20 m Rope Kit, Stainless Steel	44506-2720
RK30, 30 m Rope Kit, Stainless Steel	44506-2730
RK50, 50 m Rope Kit, Stainless Steel	44506-2750
RK80, 80 m Rope Kit, Stainless Steel	44506-2780
R5M, 5 m Rope Only	44506-3705
R10M, 10 m Rope Only	44506-3710
R20M, 20 m Rope Only	44506-3720
R30M, 30 m Rope Only	44506-3730
R50M, 50 m Rope Only	44506-3750
R80M, 80 m Rope Only	44506-3780
R100M, 100 m Rope Only	44506-3711
R126M, 126 m Rope Only	44506-3726

Accessories	Part No.
SM06-TK00, Tensioner Kit (Turnbuckle, 8 Rope Grips, & 4 Thimbles)	44506-0700
SM06-TG00, Tensioner Gripper, Stainless Steel	44506-4700
SM06-EB10, Eye Bolt Stainless Steel, 8 per pack	44506-4710
SM06-EB20, Eye Bolt	44506-0720
SM06-DL20, Double Loop Clip, Stainless Steel, 4 per pack	44506-4720
SM06-DL21, Double Loop Clip, Galvanized, 4 per pack	44506-4721
SM06-THSS, Thimble Stainless Steel, 4 per pack	44506-4770
SM06-THGV, Thimble Galvanized, 4 per pack	44506-4771
SM06-QLSS, Quick Link Stainless Steel	44506-4772
SM06-TB30, Turnbuckle, Stainless Steel	44506-4730
SM06-TB31, Turnbuckle, Galvanized	44506-4731
SM06-SP30, Spring	44506-2705
SM06-SP50, Spring, Stainless Steel	44506-4750
SM06-RPSS, Rope Pulley, Stainless Steel	44506-4780
SM06-ES60, E-Stop Mechanism	44506-4760
SM06-YLES, Yellow E-Stop Background Label	44506-4791
SM06-LF40, Replacement LED Indicator Beacon, 24 VDC	44506-4740
SM06-LF41, Replacement LED Indicator Beacon, 120 VAC	44506-4741

= Highlighted **Rapid Delivery** products are available for shipment today or within **FIVE** days.

ER1032

SpeedSPEC www.sti.com ER1032

Rope Pull Emergency Stop Switch



- Long rope spans up to 200 m (656 ft.) makes this switch ideal for applications where long rope spans are required
- IP67 (NEMA 6) enclosure enables the ER1032 switch to withstand water washdown cleaning
- Integral E-stop—the E-stop button provides emergency stopping capability at the extreme end of the installation and is field serviceable
- Tension indicator—the tension indicator makes the system easy to set up and to maintain the proper rope tension
- 4 N/C safety contacts and 2 N/O auxiliary contacts satisfy the most demanding applications
- Vibration tolerant—the snap-acting switch contacts protect against nuisance tripping due to vibration
- Indicator beacon—the indicator beacon, available in 24 VDC or 120 VAC can be wired to flash red to indicate a tripped switch or glow a constant green to indicate a properly reset switch

Conforms to IEC947-5-1, IEC947-5-5, EN418, UL508, BS5304
UL and C-UL listed, TUV certified

Specifications

Electrical	**All Models**
Contact Configurations:	4 N/C + 2 N/O
Safety Contacts:	4 N/C
Switching Ability	AC: 240 V–3 A, 120 V–6 A, Inductive: DC: 24 V–2.5 A, Inductive
Auxiliary Contacts:	2 N/O
Max Switching Current/Volt/Amp:	240 V/720 VA
Minimum Current:	5 V 5 mA DC
Electrical Life:	1 x 10^6 minimum
LED Indicator Beacon	24 VDC or 120 VAC
Mechanical	
Mounting:	Any position
Mounting Hardware:	4 x M5 screws
Max Rope Span:	125 m (410 ft.)
Operation Force:	< 125 N (28 lb.)
Tensioning Force to Run Position:	130 N (23 lb.) typical
Case Material:	Die-cast aluminum alloy
Eye Nut Material:	Stainless steel
Wiring Entry:	4 x M20 or 4 x 0.5 in. NPT
Weight:	1320 g (42 oz.)
Color:	Yellow
Mechanical Life:	1 x 10^6 minimum
Environmental	
Protection:	IP67 (NEMA 6)
Operating Temperature:	-25 to 80°C (-13 to 176°F)
Cleaning:	Water washdown
Compliance	
Standards:	IEC947-5-1, IEC947-5-5, EN418, UL508, BS5304
Approvals/Listings:	CE marked for all applicable directives, UL and C-UL, TUV

Specifications are subject to change without notice.

Note: The safety contacts of the Omron STI switches are described as normally closed (N/C)—i.e., with the rope properly tensioned and the machine able to be started.

OMRON SCIENTIFIC TECHNOLOGIES, INC.
USA Tel. 1/888/510-4357 **Canada** Tel. 1/866/986-6766

For the Latest Information
On the Internet: **www.sti.com** or **www.omron.ca**

OMRON

Operation



Blue Reset Knob
A blue reset button is provided to easily return the unit back to its machine-run position after actuation.

Installation Hardware Available



RK Rope Tension Kit
The RK Rope Tension Kit comes with all of the required hardware for most installations. A spring is required as shown in the installation example below.

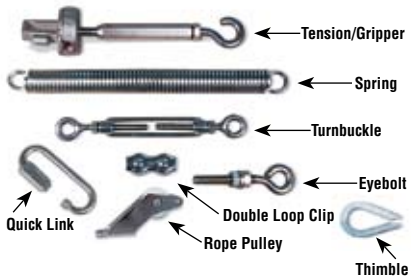

Installation Hardware
Individual hardware items may be purchased for specific installation requirements.

Contact Arrangements

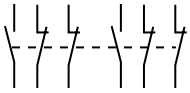

	0 mm / 0 in	4.0 / 0.16		15.0 / 0.59	17.0 / 0.67
4NC + 2NO	Rope Slack	Tension Range			Rope Pulled
11/12		■	■	■	
21/22		■	■	■	
33/34	■				■
41/42		■	■	■	
51/52		■	■	■	
63/64	■				■

□ Contact Open ■ Contact Closed

Mounting Specification

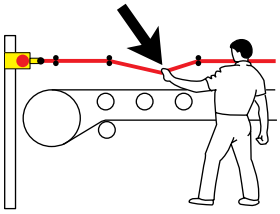

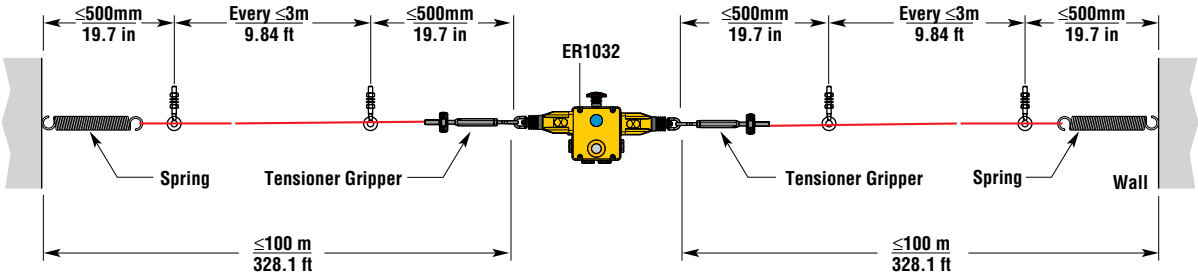

Note: Some installations may require a ER1022 on each end.

For a guide to installing, see “Proper Installation of Rope or Wire Pull Switches” in The Safety Library Section of this catalog.

Dimensions

(mm/in.)

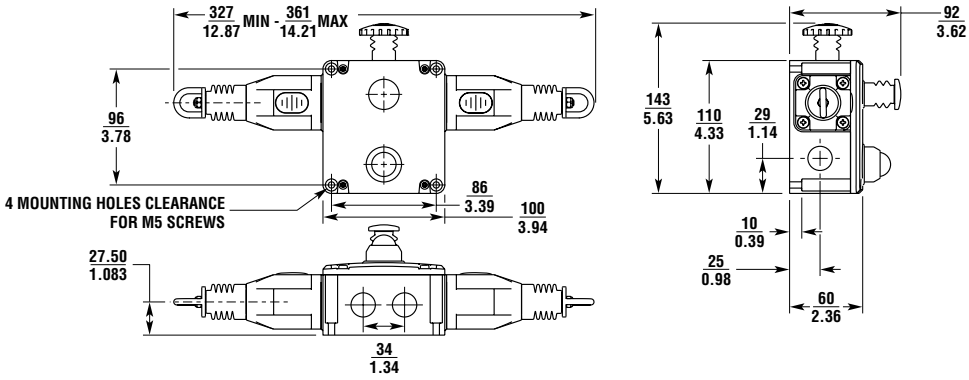

Applications

Typical applications are on conveyor systems and across rotating machinery, and around hazardous areas.

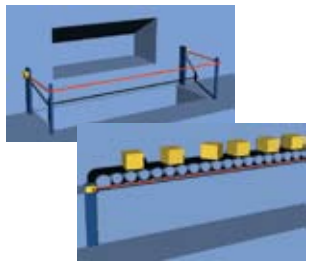

G

Ordering

Model	E-Stop	Indicator Beacon	Contacts	Wiring Entry	Part No.
ER1032-042MEL	Included	Included (24 VDC)	4 N/C + 2 N/O	4 x M20	44506-7410
ER1032-042MELAC	Included	Included (120 VAC)	4 N/C + 2 N/O	4 x M20	44506-7411
ER1032-042NEL	Included	Included (24 VDC)	4 N/C + 2 N/O	4 x 1/2 in. NPT	44506-7420
ER1032-042NELAC	Included	Included (120 VAC)	4 N/C + 2 N/O	4 x 1/2 in. NPT	44506-7421

Accessories	Part No.
SM06-SL711, Replacement Lid/LED, 24 VDC	44506-7710
SM06-SL711AC, Replacement Lid/LED, 120 VAC	44506-7711
RK5, 5 m Rope Kit, Stainless Steel	44506-2705
RK10, 10 m Rope Kit, Stainless Steel	44506-2710
RK15, 15 m Rope Kit, Stainless Steel	44506-2715
RK20, 20 m Rope Kit, Stainless Steel	44506-2720
RK30, 30 m Rope Kit, Stainless Steel	44506-2730
RK50, 50 m Rope Kit, Stainless Steel	44506-2750
RK80, 80 m Rope Kit, Stainless Steel	44506-2780
RK100, 100 m Rope Kit, Stainless Steel	44506-2711
RK126, 126 m Rope Kit, Stainless Steel	44505-2726
R5M, 5 m Rope Only	44506-3705
R10M, 10 m Rope Only	44506-3710
R20M, 20 m Rope Only	44506-3720
R30M, 30 m Rope Only	44506-3730
R50M, 50 m Rope Only	44506-3750
R80M, 80 m Rope Only	44506-3780
R100M, 100 m Rope Only	44506-3711
R126M, 126 m Rope Only	44506-3726

Accessories	Part No.
SM06-TK00, Tensioner Kit (Turnbuckle, 8 Rope Grips & 4 Thimbles)	44506-0700
SM06-TG00, Tensioner Gripper, Stainless Steel	44506-4700
SM06-EB10, Eye Bolt Stainless Steel, 8 per pack	44506-4710
SM06-EB20, Eye Bolt	44506-0720
SM06-DL20, Double Loop Clip, Stainless Steel, 4 per pack	44506-4720
SM06-DL21, Double Loop Clip, Galvanized, 4 per pack	44506-4721
SM06-THSS, Thimble Stainless Steel, 4 per pack	44506-4770
SM06-THGV, Thimble Galvanized, 4 per pack	44506-4771
SM06-TB30, Turnbuckle, Stainless Steel	44506-4730
SM06-TB31, Turnbuckle, Galvanized	44506-4731
SM06-SP30, Spring	44506-0730
SM06-SP50, Spring, Stainless Steel	44506-4750
SM06-RPSS, Rope Pulley, Stainless Steel	44506-4780
SM06-ES60, E-Stop Mechanism	44506-4760
SM06-LF40, Replacement LED Indicator Beacon, 24 VDC	44506-4740
SM06-LF41, Replacement LED Indicator Beacon, 120 VAC	44506-4741

= Highlighted **Rapid Delivery** products are available for shipment today or within **FIVE** days.

OMRON SCIENTIFIC TECHNOLOGIES, INC.
USA Tel. 1/888/510-4357 **Canada** Tel. 1/866/986-6766

For the Latest Information
On the Internet: **www.sti.com** or **www.omron.ca**

ER1022

SpeedSPEC www.sti.com ER1022

Rope Pull Emergency Stop Switch



- Long rope spans up to 125 m (410 ft.) makes this switch ideal for applications where long rope spans are required
- IP67 (NEMA 6) enclosure enables the ER1022 switch to withstand water washdown cleaning
- Integral E-stop—the E-stop button provides emergency stopping capability at the extreme end of the installation and is field serviceable
- Tension indicator—the tension indicator makes the system easy to set up and to maintain the proper rope tension
- 4 N/C safety contacts and 2 N/O auxiliary contacts satisfy the most demanding applications
- Vibration tolerant—the snap-acting switch contacts protect against nuisance tripping due to vibration
- Indicator beacon—the indicator beacon, available in 24 VDC or 120 VAC, can be wired to flash red to indicate a tripped switch or glow a constant green to indicate a properly reset switch

Conforms to IEC947-5-1, IEC947-5-5, EN418, UL508, BS5304
UL and C-UL listed, TUV certified

G

Specifications

Electrical	All Models
Contact Configurations:	4 N/C + 2 N/O
Safety Contacts:	4 N/C
Switching Ability	AC: 240 V–3 A, 120 V–6 A, Inductive; DC: 24 V–2.5 A, Inductive
Auxiliary Contacts:	2 N/O
Max Switching Current/Volt/Amp:	240 V/720 VA
Minimum Current:	5 V 5 mA DC
Electrical Life:	1 x 10^6 minimum
LED Indicator Beacon:	24 VDC or 120 VAC
Mechanical	
Mounting:	Any position
Mounting Hardware:	4 x M5 screws
Max Rope Span:	125 m (410 ft.)
Operation Force:	< 125 N (28 lb.)
Tensioning Force to Run Position:	130 N (23 lb.) typical
Case Material:	Die-cast aluminum alloy
Eye Nut Material:	Stainless steel
Wiring Entry:	4 x M20 or 3 x 0.5 in. NPT
Weight:	1100 g (39 oz.)
Color:	Yellow
Mechanical Life:	1 x 10^6 minimum
Environmental	
Protection:	IP67 (NEMA 6)
Operating Temperature:	-25 to 80°C (-13 to 176°F)
Cleaning:	Water washdown
Compliance	
Standards:	IEC947-5-1, IEC947-5-5, EN418, UL508, BS5304
Approvals/Listings:	CE marked for all applicable directives, UL and C-UL, TUV

Specifications are subject to change without notice.

Note: The safety contacts of the Omron STI switches are described as normally closed (N/C)—i.e., with the rope properly tensioned and the machine able to be started.

Operation



Blue Reset Knob
A blue reset button is provided to easily return the unit back to its machine-run position after actuation.

Installation Hardware Available



RK Rope Tension Kit
The RK Rope Tension Kit comes with all of the required hardware for most installations. A spring is required as shown in the installation example below.

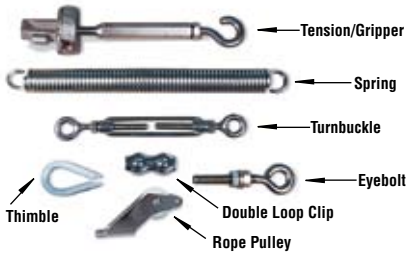

Installation Hardware
Individual hardware items may be purchased for specific installation requirements.

Contact Arrangements

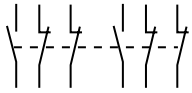

	0 mm / 0 in	4.0 / 0.16	15.0 / 0.59	17.0 / 0.67
4NC + 2NO	Rope Slack	Tension Range		Rope Pulled
11/12		■		
21/22		■		
33/34	■			■
41/42		■		
51/52		■		
63/64	■			■

□ Contact Open ■ Contact Closed

Mounting Specification

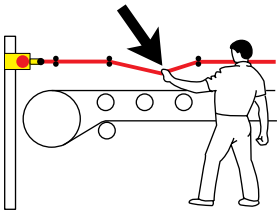

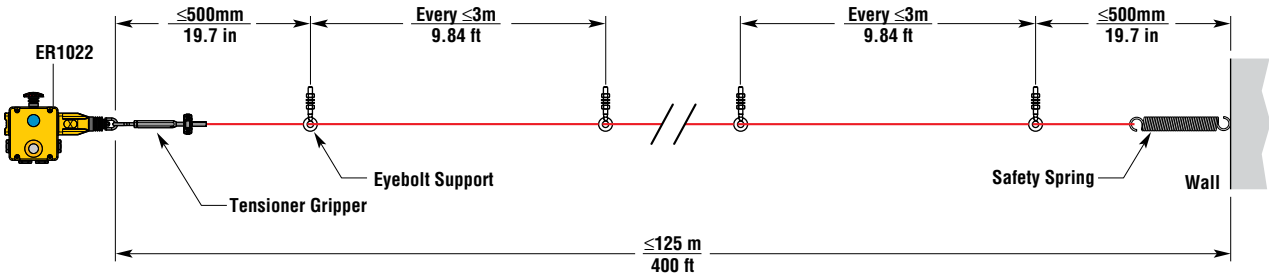

Note: Some installations may require a ER1022 on each end.

For a guide to installing, see “Proper Installation of Rope or Wire Pull Switches” in The Safety Library Section of this catalog.

OMRON SCIENTIFIC TECHNOLOGIES, INC.
USA Tel. 1/888/510-4357 Canada Tel. 1/866/986-6766

For the Latest Information
On the Internet: www.sti.com or www.omron.ca

Dimensions

(mm/in.)

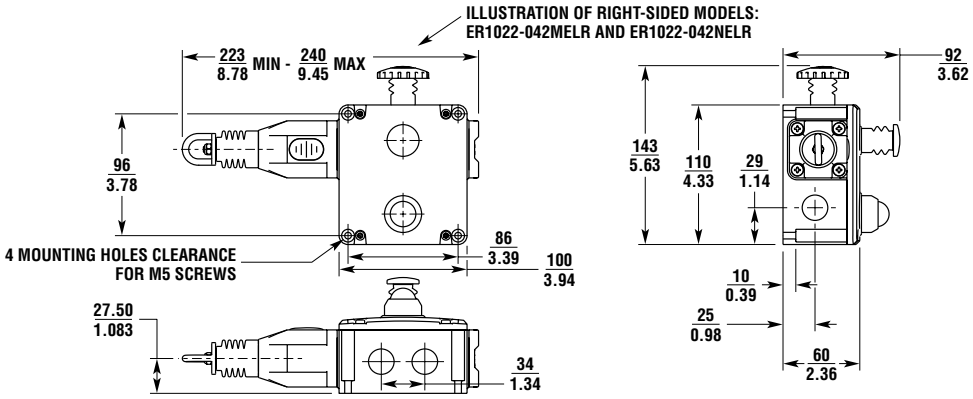

Note: The designation of the ER1022 switch as left-sided or right-sided is based upon the mounted position of the switch, in the installation.

Applications

Typical applications are on conveyor systems and across rotating machinery, and around hazardous areas.

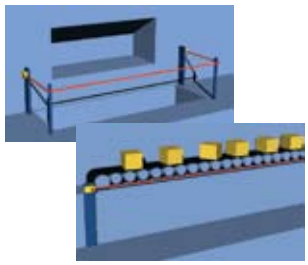

Ordering

Model	E-Stop	Indicator Beacon	Contacts	Wiring Entry	Part No.
ER1022-042MELL	Included	Included (24 VDC)	4 N/C + 2 N/O	4 x M20	44506-6410
ER1022-042MELLAC	Included	Included (120 VAC)	4 N/C + 2 N/O	4 x M20	44506-6411
ER1022-042NELL	Included	Included (24 VDC)	4 N/C + 2 N/O	4 x 1/2 in. NPT	44506-6420
ER1022-042NELLAC	Included	Included (120 VAC)	4 N/C + 2 N/O	4 x 1/2 in. NPT	44506-6421
ER1022-042MELR	Included	Included (24 VDC)	4 N/C + 2 N/O	4 x M20	44506-6510
ER1022-042MELRAC	Included	Included (120 VAC)	4 N/C + 2 N/O	4 x M20	44506-6511
ER1022-042NELR	Included	Included (24 VDC)	4 N/C + 2 N/O	4 x 1/2 in. NPT	44506-6520
ER1022-042NELRAC	Included	Included (120 VAC)	4 N/C + 2 N/O	4 x 1/2 in. NPT	44506-6521

Accessories	Part No.
SM06-SL710, Replacement Lid/LED, 24 VDC	44506-6710
SM06-SL710AC, Replacement Lid/LED, 120 VAC	44506-6711
RK5, 5 m Rope Kit, Stainless Steel	44506-2705
RK10, 10 m Rope Kit, Stainless Steel	44506-2710
RK15, 15 m Rope Kit, Stainless Steel	44506-2715
RK20, 20 m Rope Kit, Stainless Steel	44506-2720
RK30, 30 m Rope Kit, Stainless Steel	44506-2730
RK50, 50 m Rope Kit, Stainless Steel	44506-2750
RK80, 80 m Rope Kit, Stainless Steel	44506-2780
RK100, 100 m Rope Kit, Stainless Steel	44506-2711
RK126, 126 m Rope Kit, Stainless Steel	44505-2726
R5M, 5 m Rope Only	44506-3705
R10M, 10 m Rope Only	44506-3710
R20M, 20 m Rope Only	44506-3720
R30M, 30 m Rope Only	44506-3730
R50M, 50 m Rope Only	44506-3750
R80M, 80 m Rope Only	44506-3780
R100M, 100 m Rope Only	44506-3711
R126M, 126 m Rope Only	44506-3726

Accessories	Part No.
SM06-TK00, Tensioner Kit (Turnbuckle, 8 Rope Grips, & 4 Thimbles)	44506-0700
SM06-TG00, Tensioner Gripper, Stainless Steel	44506-4700
SM06-EB10, Eye Bolt Stainless Steel, 8 per pack	44506-4710
SM06-EB20, Eye Bolt	44506-0720
SM06-DL20, Double Loop Clip, Stainless Steel, 4 per pack	44506-4720
SM06-DL21, Double Loop Clip, Galvanized, 4 per pack	44506-4721
SM06-THSS, Thimble Stainless Steel, 4 per pack	44506-4770
SM06-THGV, Thimble Galvanized, 4 per pack	44506-4771
SM06-TB30, Turnbuckle, Stainless Steel	44506-4730
SM06-TB31, Turnbuckle, Galvanized	44506-4731
SM06-SP30, Spring	44506-0730
SM06-SP50, Spring, Stainless Steel	44506-4750
SM06-RPSS, Rope Pulley, Stainless Steel	44506-4780
SM06-ES60, E-Stop Mechanism	44506-4760
SM06-LF40, Replacement LED Indicator Beacon, 24 VDC	44506-4740
SM06-LF41, Replacement LED Indicator Beacon, 120 VAC	44506-4741

= Highlighted **Rapid Delivery** products are available for shipment today or within **FIVE** days.

XER6022

SpeedSPEC www.sti.com XER6022

Rope Pull Emergency Stop Switch

- Long rope spans up to 80 m (262 ft.) means fewer number of switches required per application
- Tension indicator—the tension indicator makes the system easy to set up and to maintain the proper rope tension
- Contact arrangements of 1 N/C + 1 N/O
- IP67 (NEMA 6) enclosure enables the XER6022 switch to withstand water washdown cleaning
- Heavy-duty housing—the die-cast housing and stainless steel eye nut makes the XER6022 suitable for demanding industrial applications
- Reset button—the blue reset button must be pushed in order to return to "machine run" condition following switch actuation by a pulled or slacked rope
- Long life—the XER6022 switch is designed for a minimum of one million actuations
- Vibration tolerant—the snap-acting switch contacts protect against nuisance tripping due to vibration
- E-stop button—the XER6022 has two mounting positions where the optional E-stop button may be installed; the E-stop button may be added or replaced in the field



CE

Conforms to IEC947-5-1, IEC947-5-5, EN418, UL508, BS5304

Specifications

Electrical	**All Models**		
Ex Classification:	II 2 G	EEx d II C T6	
Certification:	PTB 00 ATEX 1093X	IBExU 01 ATEX 1007X	
Contact Configurations:	1 N/C + 1 N/O		
Safety Contacts:	1 N/C		
Rated Voltage AC15:	400 VAC	250 VAC	250 VDC
Rated Current DC13:	2 A AC	4 A AC	0.15 A DC
AC Ratings (Switching): Resistive: Inductive:	250 V 5 A 3 A	125 V 5 A 3 A	
DC Ratings (Switching): Resistive: Inductive:	250 V 0.4 A 0.03 A	125 V 0.8 A 0.06 A	30 V 7 A 5 A
Electrical Life:	1 x 10^6 minimum		
Mechanical			
Mounting:	Any position		
Mounting Hardware:	4 x M5 screws		
Actuator Travel for Positive Opening:	See diagrams		
Max Rope Span:	80 m (262 ft.)		
Operation Force:	< 125 N (28 lb.)		
Tensioning Force to Run Position:	130 N (23 lb.) typical		
Case Material:	Die-cast aluminum alloy		
Eye Nut Material:	Stainless steel		
Wiring Entry:	3 m cable		
Weight:	880 g (31 oz.)		
Color:	Yellow		
Mechanical Life:	1 x 10^6 minimum		
Environmental			
Protection:	IP67 (NEMA 6)		
Operating Temperature:	-25 to 80°C (-13 to 176°F)		
Cleaning:	Water washdown		
Compliance			
Standards:	IEC947-5, IEC947-5-5, EN418, UL508, BS5304		
Approvals/Listings:	CE marked for all applicable directives (UL and C-UL pending)		

Specifications are subject to change without notice.

Note: The safety contacts of the Omron STI switches are described as normally closed (N/C)—i.e., with the rope properly tensioned and the machine able to be started.

Explosion-Proof Classification

The explosion-proof models of safety interlock switches are specifically designed for potentially explosive atmospheres while retaining the features and operating characteristics of the conventional models.

A sealed flameproof contact block makes the explosion-proof interlock switches suitable for use in European Zone 1 and Zone 2 environments, which are typical of those found in the chemical and petrochemical industries. All switches are classified by the European method as EEx d II C T6. For a full explanation of the classification method, see "Hazardous Location Rating Systems for Interlock Switches" in The Safety Library Section of this catalog.

These switches are not suitable for use in atmospheres containing Group I gases, e.g., methane (firedamp).

These switches DO NOT meet all conditions of the US classification of Class I, Div 1, due to the differences between European and US classification methods. In the US and Canada, these products can be used in areas classified as Class I, Division 2 in Groups A (acetylene), B (hydrogen), C (ethylene) and D (propane).

OMRON SCIENTIFIC TECHNOLOGIES, INC.
USA Tel. 1/888/510-4357 **Canada** Tel. 1/866/986-6766

For the Latest Information
On the Internet: **www.sti.com** or **www.omron.ca**

OMRON

Operation



Blue Reset Knob
A blue reset button is provided to easily return the unit back to its machine-run position after actuation.



Emergency Push Button
The emergency push button may be installed or repositioned in the field. The XER6022 has two possible mounting positions for the emergency stop button.

Installation Hardware Available



RK Rope Tension Kit
The RK Rope Tension Kit comes with all of the required hardware for most installations. A spring is required as shown in the installation example below.

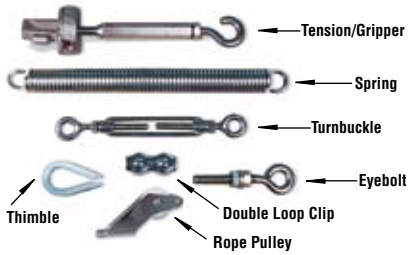

Installation Hardware
Individual hardware items may be purchased for specific installation requirements.

Contact Arrangements

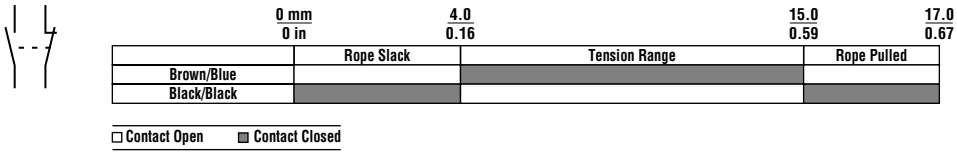

Mounting Specification

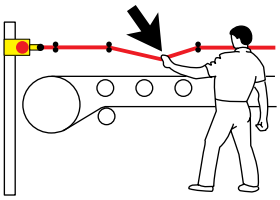

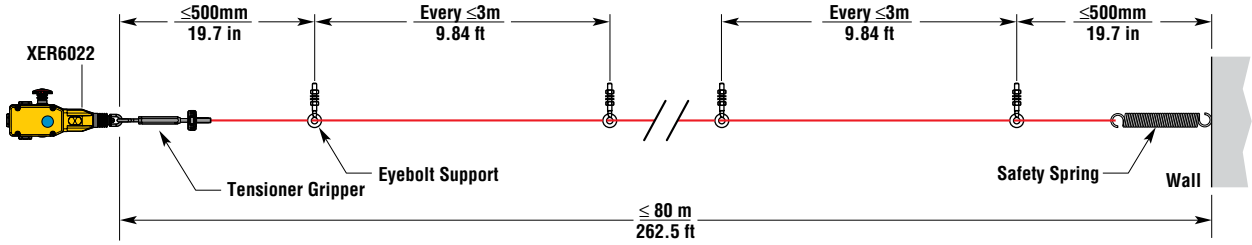

Note: Some installations may require a XER6022 on each end.

For a guide to installing, see "Proper Installation of Rope or Wire Pull Switches" in The Safety Library Section of this catalog.

Applications

Typical applications are on conveyor systems and across rotating machinery, and around hazardous areas.

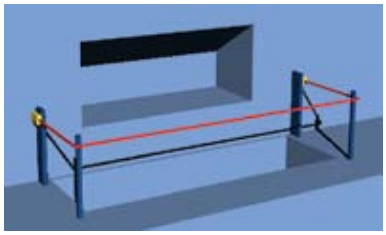

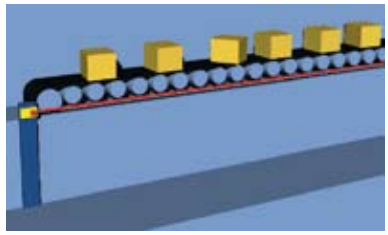

Dimensions

(mm/in.)

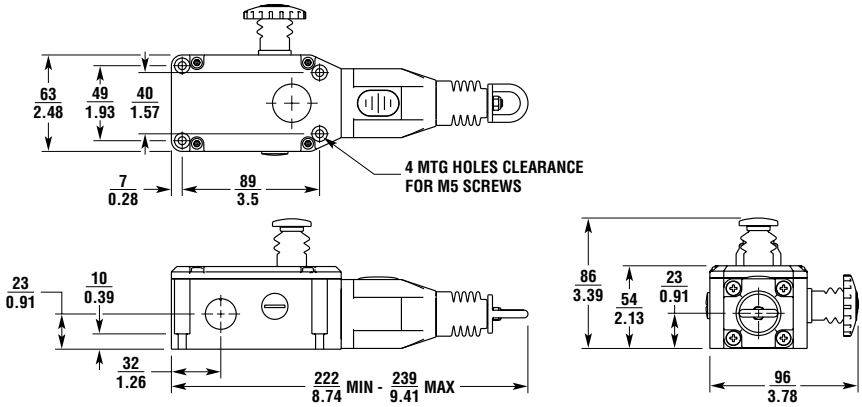

Ordering

Model	E-Stop	Contacts	Wiring Entry	Part No.
XER6022-011C3	Not Included	1 N/C + 1 N/O	3 m cable	44506-5600

Model	Part No.
SM06-SLXER6022, Replacement Lid	44506-5720
RK5, 5 m Rope Kit, Stainless Steel	44506-2705
RK10, 10 m Rope Kit, Stainless Steel	44506-2710
RK15, 15 m Rope Kit, Stainless Steel	44506-2715
RK20, 20 m Rope Kit, Stainless Steel	44506-2720
RK30, 30 m Rope Kit, Stainless Steel	44506-2730
RK50, 50 m Rope Kit, Stainless Steel	44506-2750
RK80, 80 m Rope Kit, Stainless Steel	44506-2780
R5M, 5 m Rope Only	44506-3705
R10M, 10 m Rope Only	44506-3710
R20M, 20 m Rope Only	44506-3720
R30M, 30 m Rope Only	44506-3730
R50M, 50 m Rope Only	44506-3750
R80M, 80 m Rope Only	44506-3780
R100M, 100 m Rope Only	44506-3711
R126M, 126 m Rope Only	44506-3726

Model	Part No.
SM06-TG00, Tensioner Gripper, Stainless Steel	44506-4700
SM06-EB10, Eye Bolt Stainless Steel, 8 per pack	44506-4710
SM06-DL20, Double Loop Clip, Stainless Steel, 4 per pack	44506-4720
SM06-DL21, Double Loop Clip, Galvanized, 4 per pack	44506-4721
SM06-THSS, Thimble Stainless Steel, 4 per pack	44506-4770
SM06-THGV, Thimble Galvanized, 4 per pack	44506-4771
SM06-TB30, Turnbuckle, Stainless Steel	44506-4730
SM06-TB31, Turnbuckle, Galvanized	44506-4731
SM06-SP50, Spring, Stainless Steel	44506-4750
SM06-RPSS, Rope Pulley, Stainless Steel	44506-4780
SM06-ES60, E-Stop Mechanism	44506-4760

= Highlighted **Rapid Delivery** products are available for shipment today or within **FIVE** days.

OMRON SCIENTIFIC TECHNOLOGIES, INC.
USA Tel. 1/888/510-4357 **Canada** Tel. 1/866/986-6766

For the Latest Information
On the Internet: **www.sti.com** or **www.omron.ca**

XER1022

SpeedSPEC www.sti.com XER1022

Rope Pull Emergency Stop Switch

- Long rope spans up to 125 m (410 ft.) makes this switch ideal for applications where long rope spans are required
- Heavy-duty housing—the die-cast housing and stainless steel eye nut make the XER1022 suitable for demanding industrial applications
- IP67 (NEMA 6) enclosure enables the XER1022 switch to withstand water washdown cleaning
- Integral E-stop—the optional E-stop button provides emergency stopping capability at the extreme end of the installation and is field serviceable
- Tension indicator—the tension indicator makes the system easy to set up and to maintain the proper rope tension
- Contact arrangement of 1 N/C + 1 N/O
- Vibration tolerant—the snap-acting switch contacts protect against nuisance tripping due to vibration
- Long life—the XER1022 switch is designed for a minimum of one million actuations
- Reset button—the blue reset button must be pushed in order to return to "machine run" condition following switch actuation by a pulled or slacked rope



CE

Conforms to IEC947-5-1, IEC947-5-5, EN418, UL508, BS5304

G

Specifications

Electrical	All Models		
Ex Classification:	II 2 G	EEx d II C T6	
Certification:	PTB 00 ATEX 1093X	IBExU 01 ATEX 1007X	
Contact Configurations:	1 N/C + 1 N/O		
Safety Contacts:	1 N/C		
Rated Voltage AC15:	400 VAC	250 VAC	250 VDC
Rated Current DC13:	2 A AC	4 A AC	0.15 A DC
AC Ratings (Switching): Resistive Inductive	250 V 5 A 3 A	125 V 5 A 3 A	
DC Ratings (Switching): Resistive: Inductive:	250 V 0.4 A 0.03 A	125 V 0.8 A 0.06 A	30 V 7 A 5 A
Electrical Life:	1 x 10^6 minimum		
Mechanical			
Mounting:	Any position		
Mounting Hardware:	4 x M5 screws		
Actuator Travel for Positive Opening:	See diagrams		
Max Rope Span:	125 m (410 ft.)		
Operation Force:	< 125 N (28 lb.)		
Tensioning Force to Run Position:	130 N (23 lb.) typical		
Case Material:	Die-cast aluminum alloy		
Eye Nut Material:	Stainless steel		
Wiring Entry:	3 m cable		
Weight:	1100 g (39 oz.)		
Color:	Yellow		
Mechanical Life:	1 x 10^6 minimum		
Environmental			
Protection:	IP67 (NEMA 6)		
Operating Temperature:	-25 to 80°C (-13 to 176°F)		
Cleaning:	Water washdown		
Compliance			
Standards:	IEC947-5-1, IEC947-5-5, EN418, UL508, BS5304		
Approvals/Listings:	CE marked for all applicable directives (UL and C-UL pending)		

Specifications are subject to change without notice.

Note: The safety contacts of the Omron STI switches are described as normally closed (N/C)—i.e., with the rope properly tensioned and the machine able to be started.

Explosion-Proof Classification

The explosion-proof models of safety interlock switches are specifically designed for potentially explosive atmospheres while retaining the features and operating characteristics of the conventional models.

A sealed flameproof contact block makes the explosion-proof interlock switches suitable for use in European Zone 1 and Zone 2 environments, which are typical of those found in the chemical and petrochemical industries. All switches are classified by the European method as EEx d II C T6. For a full explanation of the classification method, see "Hazardous Location Rating Systems for Interlock Switches" in The Safety Library Section of this catalog.

These switches are not suitable for use in atmospheres containing Group I gases, e.g., methane (firedamp).

These switches DO NOT meet all conditions of the US classification of Class I, Div 1, due to the differences between European and US classification methods. In the US and Canada, these products can be used in areas classified as Class I, Division 2 in Groups A (acetylene), B (hydrogen), C (ethylene) and D (propane).

OMRON SCIENTIFIC TECHNOLOGIES, INC.
USA Tel. 1/888/510-4357 **Canada** Tel. 1/866/986-6766

For the Latest Information
On the Internet: **www.sti.com** or **www.omron.ca**

OMRON

Operation



Blue Reset Knob
A blue reset button is provided to easily return the unit back to its machine-run position after actuation.

Installation Hardware Available



RK Rope Tension Kit
The RK Rope Tension Kit comes with all of the required hardware for most installations. A spring is required as shown in the installation example below.

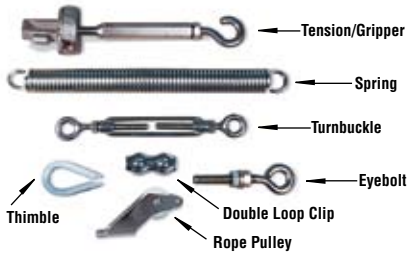

Installation Hardware
Individual hardware items may be purchased for specific installation requirements.

Contact Arrangements



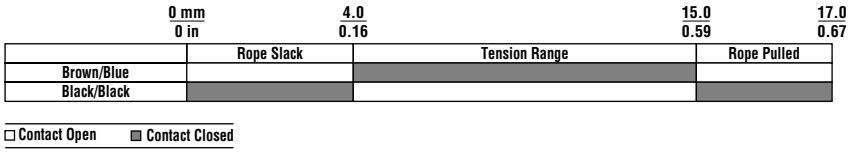

Mounting Specification

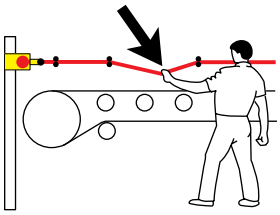

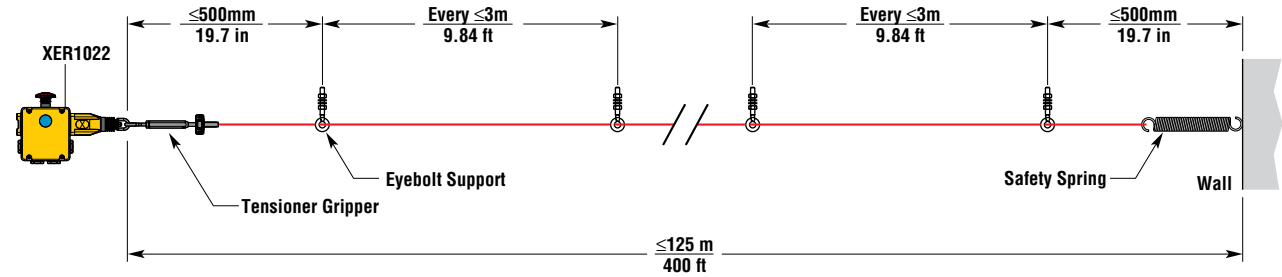

Note: Some installations may require a XER1022 on each end.

For a guide to installing, see “Proper Installation of Rope or Wire Pull Switches” in The Safety Library Section of this catalog.

Applications

Typical applications are on conveyor systems and across rotating machinery, and around hazardous areas.

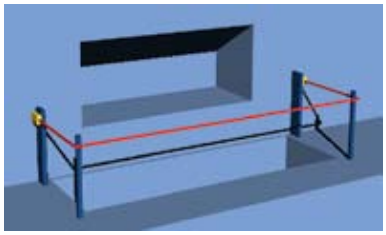

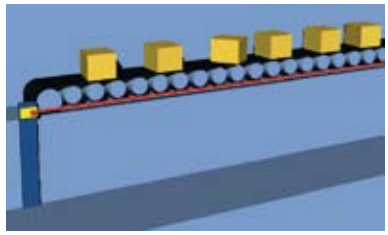

Dimensions

(mm/in.)

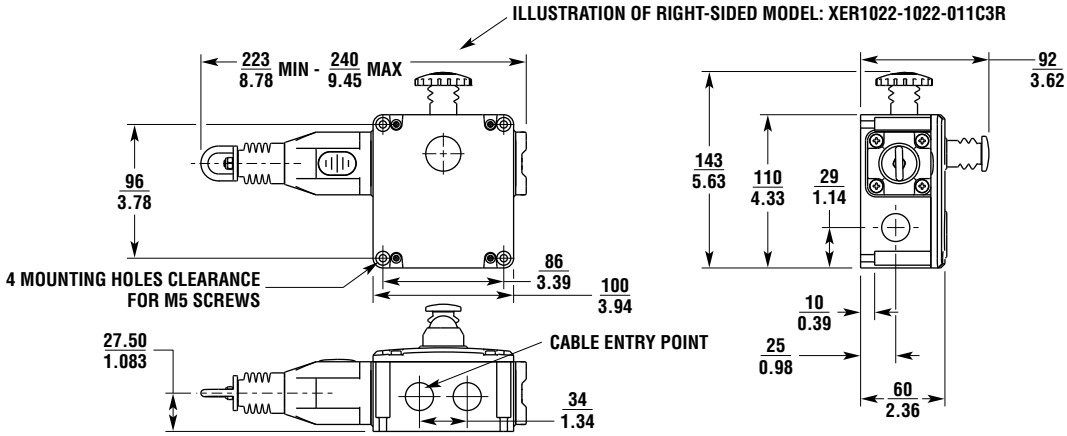

Ordering

Model	E-Stop	Contacts	Wiring Entry	Part No.
XER1022-011C3L	Not Included	1 N/C + 1 N/O	3 m cable	44506-6600
XER1022-011C3R	Not Included	1 N/C + 1 N/O	3 m cable	44506-6610

Model	Part No.
SM06-SLXER22, Replacement Lid/LED	44506-6720
RK5, 5 m Rope Kit, Stainless Steel	44506-2705
RK10, 10 m Rope Kit, Stainless Steel	44506-2710
RK15, 15 m Rope Kit, Stainless Steel	44506-2715
RK20, 20 m Rope Kit, Stainless Steel	44506-2720
RK30, 30 m Rope Kit, Stainless Steel	44506-2730
RK50, 50 m Rope Kit, Stainless Steel	44506-2750
RK80, 80 m Rope Kit, Stainless Steel	44506-2780
RK100, 100 m Rope Kit, Stainless Steel	44506-2711
RK126, 126 m Rope Kit, Stainless Steel	44505-2726
R5M, 5 m Rope Only	44506-3705
R10M, 10 m Rope Only	44506-3710
R20M, 20 m Rope Only	44506-3720
R30M, 30 m Rope Only	44506-3730
R50M, 50 m Rope Only	44506-3750
R80M, 80 m Rope Only	44506-3780
R100M, 100 m Rope Only	44506-3711
R126M, 126 m Rope Only	44506-3726

Model	Part No.
SM06-TG00, Tensioner Gripper, Stainless Steel	44506-4700
SM06-EB10, Eye Bolt Stainless Steel, 8 per pack	44506-4710
SM06-DL20, Double Loop Clip, Stainless Steel, 4 per pack	44506-4720
SM06-DL21, Double Loop Clip, Galvanized, 4 per pack	44506-4721
SM06-THSS, Thimble Stainless Steel, 4 per pack	44506-4770
SM06-THGV, Thimble Galvanized, 4 per pack	44506-4771
SM06-TB30, Turnbuckle, Stainless Steel	44506-4730
SM06-TB31, Turnbuckle, Galvanized	44506-4731
SM06-SP50, Spring, Stainless Steel	44506-4750
SM06-RPSS, Rope Pulley, Stainless Steel	44506-4780
SM06-ES60, E-Stop Mechanism	44506-4760

= Highlighted **Rapid Delivery** products are available for shipment today or within **FIVE** days.

OMRON SCIENTIFIC TECHNOLOGIES, INC.
USA Tel. 1/888/510-4357 **Canada** Tel. 1/866/986-6766

For the Latest Information
On the Internet: **www.sti.com** or **www.omron.ca**