Rope Pull Emergency Stop Devices

ER6022-SS

Stainless Steel Rope Pull Emergency Stop Switch

- Rope spans up to 100 m (328 ft.) means fewer number of switches required per application
- Tension indicator maintains the proper rope tension
- Contact arrangements of 3 N/C + 1 N/O or 2 N/C + 2 N/O
- IP67 (NEMA 6) enclosure withstands water washdown cleaning
- 316 stainless steel cast housing and stainless steel hardware
- Reset button—the blue reset button must be pushed in order to return to “machine run” condition following switch actuation by a pulled or slacked rope
- Vibration tolerant—the snap-acting switch contacts protect against nuisance tripping due to vibration
- Indicator beacon—the dual indicator beacon is optional on the ER6022-SS; the indicator beacon can be wired to flash red to indicate a tripped switch or glow a constant green to indicate a properly reset switch
- Optional E-stop button—may be added or replaced in the field
- Rubber bellows contain UV inhibitor making the switches suitable for outdoor applications
- Extreme Cold Version—for applications down to -40°C



Conforms to IEC947-5-1, IEC947-5-5, EN418, UL508, BS5304
UL and C-UL listed, TUV certified

Specifications

Electrical	**ER6022-SS**
Contact Configurations:	3 N/C + 1 N/O, 2 N/C + 2 N/O
Safety Contacts:	2 N/C, 3 N/C
Switching Ability	AC: 240 V–3 A, 120 V–6 A, Inductive DC: 24 V–2.5 A, Inductive
Auxiliary Contacts:	1 N/O, 2 N/O
Max Switching Current/Volt/Amp:	240 V/720 VA
Minimum Current:	5 V 5 mA DC
Electrical Life:	1 x 10^6 minimum
LED Indicator Beacon:	24 VDC
Mechanical	
Mounting:	Any position
Mounting Hardware:	4 x M5 screws
Max Rope Span:	100 m (328 ft.)
Operation Force:	< 125 N (28 lb.)
Tensioning Force to Run Position:	130 N (23 lb.) typical
Case Material:	Die-cast 316 stainless steel
Eye Nut Material:	304 Stainless Steel
Stainless Accessory Items:	304 Stainless Steel
Wiring Entry:	3 x M20 or 3 x 0.5 in. NPT
Weight:	880 g (31 oz.)
Color:	Natural
Mechanical Life:	1 x 10^6 minimum
Environmental	
Protection:	IP67 (NEMA 6)
Operating Temperature:	Standard Versions: -25 to 80°C (-13 to 176°F) Extreme Cold Versions: -40 to 80°C (-40 to 176°F)
Cleaning:	Water washdown
Compliance	
Standards:	IEC947-5-1, IEC947-5-5, EN418, UL508, BS5304
Approvals/Listings:	CE marked for all applicable directives (UL and C-UL, TUV)

Specifications are subject to change without notice.

Note: The safety contacts of the STI switches are described as normally closed (N/C)—i.e., with the rope properly tensioned and the machine able to be started.

Operation



Blue Reset Knob
A blue reset button is provided to easily return the unit back to its machine-run position after actuation.



Emergency Push Button
The emergency push button may be installed or repositioned in the field. The ER6022-SS has two possible mounting positions for the emergency stop button. To assure compliance with all applicable European and Canadian standards, the supplied yellow background label must be applied.

Installation Hardware Available

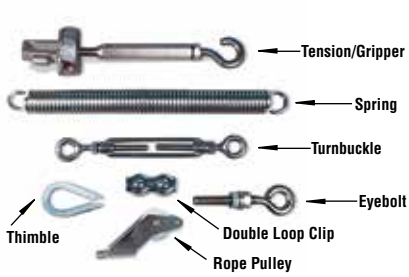

Installation Hardware
Individual hardware items may be purchased for specific installation requirements.



RK Rope Tension Kit
The RK Rope Tension Kit comes with all of the required hardware for most installations. A spring is required as shown in the installation example below.
For up to 50 m rope span, one rope end is terminated with a thimble, permanent clamp, and quick link attached.
For over 50 m rope span, 2 Tension/Gripper assemblies are supplied (no quick link.)

Contact Arrangements

ER6022-SS

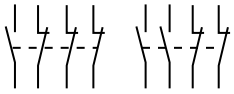

ER6022-SS	0 mm / 0 in	3.5 / 0.14	14.5 / 0.57	17.0 / 0.67
3NC + 1NO Versions	Rope Slack	Tension Range		Rope Pulled
11/12				
21/22				
33/34				
43/44				

2NC + 2NO Versions	Rope Slack	Tension Range	Rope Pulled
11/12			
21/22			
33/34			
43/44			

Mounting Specification

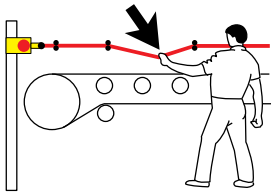

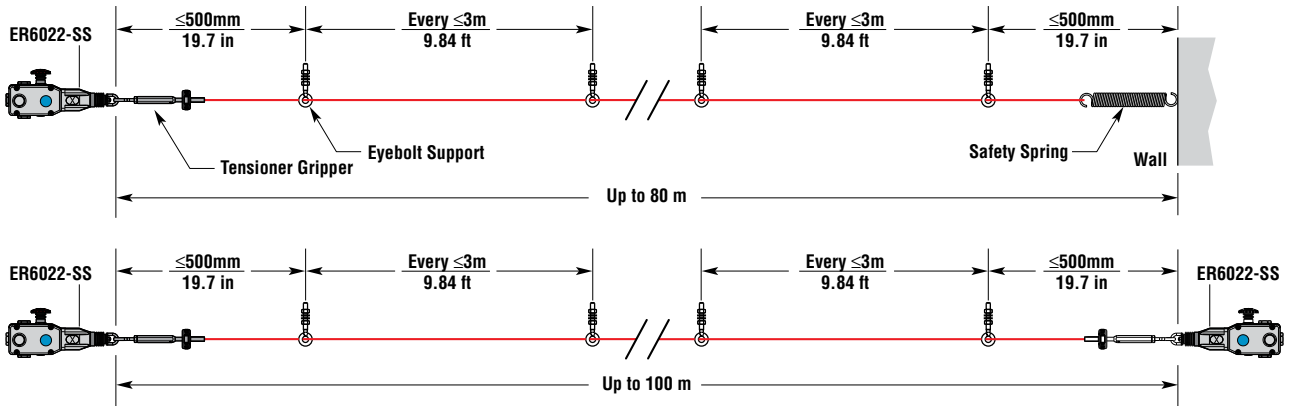

Dimensions

(mm/in.)

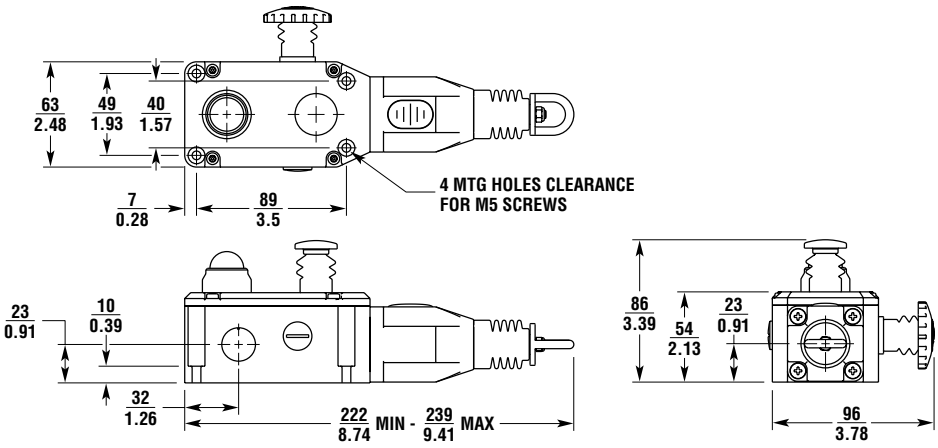

Applications

Typical applications are on conveyor systems and across rotating machinery, and around hazardous areas.

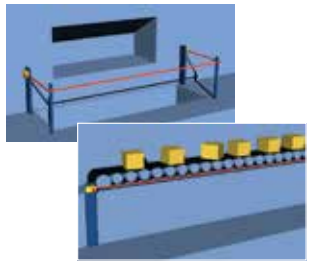

Ordering

Model	E-Stop	Indicator Beacon	Contacts	Wiring Entry	Part No.
ER6022-022MSS	Not included	Not included	2 N/C + 2 N/O	3 x M20	44506-5810
ER6022-022NSS	Not included	Not included	2 N/C + 2 N/O	3 x 1/2 in. NPT	44506-5820
ER6022-031MSS	Not included	Not included	3 N/C + 1 N/O	3 x M20	44506-5830
ER6022-031NSS	Not included	Not included	3 N/C + 1 N/O	3 x 1/2 in. NPT	44506-5840
ER6022-022MESS	Included	Not included	2 N/C + 2 N/O	3 x M20	44506-5850
ER6022-022NESS	Included	Not included	2 N/C + 2 N/O	3 x 1/2 in. NPT	44506-5860
ER6022-031MESS	Included	Not included	3 N/C + 1 N/O	3 x M20	44506-5870
ER6022-031NESS	Included	Not included	3 N/C + 1 N/O	3 x 1/2 in. NPT	44506-5880
ER6022-022MLSS	Not included	Included (24 VDC)	2 N/C + 2 N/O	3 x M20	44506-5910
ER6022-022NLSS	Not included	Included (24 VDC)	2 N/C + 2 N/O	3 x 1/2 in. NPT	44506-5920
ER6022-031MLSS	Not included	Included (24 VDC)	3 N/C + 1 N/O	3 x M20	44506-5930
ER6022-031NLSS	Not included	Included (24 VDC)	3 N/C + 1 N/O	3 x 1/2 in. NPT	44506-5940
ER6022-022MELSS	Included	Included (24 VDC)	2 N/C + 2 N/O	3 x M20	44506-5950
ER6022-022NELSS	Included	Included (24 VDC)	2 N/C + 2 N/O	3 x 1/2 in. NPT	44506-5960
ER6022-031MELSS	Included	Included (24 VDC)	3 N/C + 1 N/O	3 x M20	44506-5970
ER6022-031NELSS	Included	Included (24 VDC)	3 N/C + 1 N/O	3 x 1/2 in. NPT	44506-5980
ER6022-022MESSZ (Extreme Cold Version)	Included	Not included	2 N/C + 2 N/O	3 x M20	44506-5857

Accessories					Part No.
Stainless Steel Rope Kits	**Quick Link**	**Eye-bolts**	**Tension/ Gripper Assembly**	**Allen Wrench**	
RK5, 5 m Kit	Yes	3	1	1	44506-2705
RK10, 10 m Kit	Yes	5	1	1	44506-2710
RK15, 15 m Kit	Yes	7	1	1	44506-2715
RK20, 20 m Kit	Yes	9	1	1	44506-2720
RK30, 30 m Kit	Yes	12	1	1	44506-2730
RK50, 50 m Kit	Yes	20	1	1	44506-2750
RK80, 80 m Kit	No	30	2	2	44506-2780
RK100, 100 m Kit	No	37	2	2	44506-2711
RK126, 126 m Kit	No	45	2	2	44505-2726
Rope Only					
R5M, 5 m Rope Only					44506-3705
R10M, 10 m Rope Only					44506-3710
R20M, 20 m Rope Only					44506-3720
R30M, 30 m Rope Only					44506-3730
R50M, 50 m Rope Only					44506-3750
R80M, 80 m Rope Only					44506-3780
R100M, 100 m Rope Only					44506-3711
R126M, 126 m Rope Only					44506-3726

Accessories	Part No.
SM06-SLXER6022SS, Replacement Lid for ER6022-SS and XER6022-SS without LED	44506-5730
SM06-SLER6022LSS, Replacement Lid for ER6022-SS with LED 24 VDC	44506-5740
SM06-SLER6022LSSAC, Replacement Lid for ER6022-SS with LED 120 VAC (consult factory for complete switch with 120 VAC beacon)	44506-5741
SM06-TK00, Tensioner Kit (Turnbuckle, 8 Rope Grips, & 4 Thimbles)	44506-0700
SM06-TG00, Tensioner Gripper, Stainless Steel	44506-4700
SM06-EB10, Eye Bolt, Stainless Steel, 8 per pack	44506-4710
SM06-EB20, Eye Bolt, Galvanized	44506-0720
SM06-DL20, Double Loop Clip, Stainless Steel, 4 per pack	44506-4720
SM06-DL21, Double Loop Clip, Galvanized, 4 per pack	44506-4721
SM06-THSS, Thimble, Stainless Steel, 4 per pack	44506-4770
SM06-THGV, Thimble, Galvanized, 4 per pack	44506-4771
SM06-QLSS, Quick Link, Stainless Steel	44506-4772
SM06-TB30, Turnbuckle, Stainless Steel	44506-4730
SM06-TB31, Turnbuckle, Galvanized	44506-4731
SM06-SP30, Spring, Galvanized	44506-2705
SM06-SP50, Spring, Stainless Steel	44506-4750
SM06-RPSS, Rope Pulley, Stainless Steel	44506-4780
SM06-ES60, E-Stop Mechanism	44506-4760
SM06-YLES, Yellow E-Stop Background Label	44506-4791
SM06-LF40, Replacement LED Indicator Beacon, 24 VDC	44506-4740
SM06-LF41, Replacement LED Indicator Beacon, 120 VAC	44506-4741
SC12-M20NPTSS, M20 to NPT Adapter Stainless Steel	44512-0311

Terms and Conditions of Sale

1. Offer; Acceptance. These terms and conditions (these "Terms") are deemed part of all quotes, agreements, purchase orders, acknowledgments, price lists, catalogs, manuals, brochures and other documents, whether electronic or in writing, relating to the sale of products or services (collectively, the "Products") by Omron Electronics LLC and its subsidiary companies ("Omron"). Omron objects to any terms or conditions proposed in Buyer's purchase order or other documents which are inconsistent with, or in addition to, these Terms.
2. Prices; Payment Terms. All prices stated are current, subject to change without notice by Omron. Omron reserves the right to increase or decrease prices on any unshipped portions of outstanding orders. Payments for Products are due net 30 days unless otherwise stated in the invoice.
3. Discounts. Cash discounts, if any, will apply only on the net amount of invoices sent to Buyer after deducting transportation charges, taxes and duties, and will be allowed only if (i) the invoice is paid according to Omron's payment terms and (ii) Buyer has no past due amounts.
4. Interest. Omron, at its option, may charge Buyer 1-1/2% interest per month or the maximum legal rate, whichever is less, on any balance not paid within the stated terms.
5. Orders. Omron will accept no order less than $200 net billing.
6. Governmental Approvals. Buyer shall be responsible for, and shall bear all costs involved in, obtaining any government approvals required for the importation or sale of the Products.
7. Taxes. All taxes, duties and other governmental charges (other than general real property and income taxes), including any interest or penalties thereon, imposed directly or indirectly on Omron or required to be collected directly or indirectly by Omron for the manufacture, production, sale, delivery, importation, consumption or use of the Products sold hereunder (including customs duties and sales, excise, use, turnover and license taxes) shall be charged to and remitted by Buyer to Omron.
8. Financial. If the financial position of Buyer at any time becomes unsatisfactory to Omron, Omron reserves the right to stop shipments or require satisfactory security or payment in advance. If Buyer fails to make payment or otherwise comply with these Terms or any related agreement, Omron may (without liability and in addition to other remedies) cancel any unshipped portion of Products sold hereunder and stop any Products in transit until Buyer pays all amounts, including amounts payable hereunder, whether or not then due, which are owing to it by Buyer. Buyer shall in any event remain liable for all unpaid accounts.
9. Cancellation; Etc. Orders are not subject to rescheduling or cancellation unless Buyer indemnifies Omron against all related costs or expenses.
10. Force Majeure. Omron shall not be liable for any delay or failure in delivery resulting from causes beyond its control, including earthquakes, fires, floods, strikes or other labor disputes, shortage of labor or materials, accidents to machinery, acts of sabotage, riots, delay in or lack of transportation or the requirements of any government authority.
11. Shipping; Delivery. Unless otherwise expressly agreed in writing by Omron:
    a. Shipments shall be by a carrier selected by Omron; Omron will not drop ship except in "break down" situations.
    b. Such carrier shall act as the agent of Buyer and delivery to such carrier shall constitute delivery to Buyer;
    c. All sales and shipments of Products shall be FOB shipping point (unless otherwise stated in writing by Omron), at which point title and risk of loss shall pass from Omron to Buyer; provided that Omron shall retain a security interest in the Products until the full purchase price is paid;
    d. Delivery and shipping dates are estimates only; and
    e. Omron will package Products as it deems proper for protection against normal handling and extra charges apply to special conditions.
12. Claims. Any claim by Buyer against Omron for shortage or damage to the Products occurring before delivery to the carrier must be presented in writing to Omron within 30 days of receipt of shipment and include the original transportation bill signed by the carrier noting that the carrier received the Products from Omron in the condition claimed.
13. Warranties. (a) Exclusive Warranty. Omron's exclusive warranty is that the Products will be free from defects in materials and workmanship for a period of twelve months from the date of sale by Omron (or such other period expressed in writing by Omron). Omron disclaims all other warranties, express or implied. (b) Limitations. OMRON MAKES NO WARRANTY OR REPRESENTATION, EXPRESS OR IMPLIED, ABOUT NON-INFRINGEMENT, MERCHANTABILITY OR FITNESS FOR A PARTICULAR PURPOSE OF THE PRODUCTS. BUYER ACKNOWLEDGES THAT IT ALONE HAS DETERMINED THAT THE PRODUCTS WILL SUITABLY MEET THE REQUIREMENTS OF THEIR INTENDED USE. Omron further disclaims all warranties and responsibility of any type for claims or expenses based on infringement by the Products or otherwise of any intellectual property right. (c) Buyer Remedy. Omron's sole obligation hereunder shall be, at Omron's election, to (i) replace (in the form originally shipped with Buyer responsible for labor charges for removal or replacement thereof) the non-complying Product, (ii) repair the non-complying Product, or (iii) repay or credit Buyer an amount equal to the purchase price of the non-complying Product; provided that in no event shall Omron be responsible for warranty, repair, indemnity or any other claims or expenses regarding the Products unless Omron's analysis confirms that the Products were properly handled, stored, installed and maintained and not subject to contamination, abuse, misuse or inappropriate modification. Return of any Products by Buyer must be approved in writing by Omron before shipment. Omron Companies shall not be liable for the suitability or unsuitability or the results from the use of Products in combination with any electrical or electronic components, circuits, system assemblies or any other materials or substances or environments. Any advice, recommendations or information given orally or in writing, are not to be construed as an amendment or addition to the above warranty. See http://www.omron247.com or contact your Omron representative for published information.
14. Limitation on Liability; Etc. OMRON COMPANIES SHALL NOT BE LIABLE FOR SPECIAL, INDIRECT, INCIDENTAL, OR CONSEQUENTIAL DAMAGES, LOSS OF PROFITS OR PRODUCTION OR COMMERCIAL LOSS IN ANY WAY CONNECTED WITH THE PRODUCTS, WHETHER SUCH CLAIM IS BASED IN CONTRACT, WARRANTY, NEGLIGENCE OR STRICT LIABILITY. Further, in no event shall liability of Omron Companies exceed the individual price of the Product on which liability is asserted.
15. Indemnities. Buyer shall indemnify and hold harmless Omron Companies and their employees from and against all liabilities, losses, claims, costs and expenses (including attorney's fees and expenses) related to any claim, investigation, litigation or proceeding (whether or not Omron is a party) which arises or is alleged to arise from Buyer's acts or omissions under these Terms or in any way with respect to the Products. Without limiting the foregoing, Buyer (at its own expense) shall indemnify and hold harmless Omron and defend or settle any action brought against such Companies to the extent based on a claim that any Product made to Buyer specifications infringed intellectual property rights of another party.
16. Property; Confidentiality. Any intellectual property in the Products is the exclusive property of Omron Companies and Buyer shall not attempt to duplicate it in any way without the written permission of Omron. Notwithstanding any charges to Buyer for engineering or tooling, all engineering and tooling shall remain the exclusive property of Omron. All information and materials supplied by Omron to Buyer relating to the Products are confidential and proprietary, and Buyer shall limit distribution thereof to its trusted employees and strictly prevent disclosure to any third party.
17. Export Controls. Buyer shall comply with all applicable laws, regulations and licenses regarding (i) export of products or information; (iii) sale of products to "forbidden" or other proscribed persons; and (ii) disclosure to non-citizens of regulated technology or information.
18. Miscellaneous. (a) Waiver. No failure or delay by Omron in exercising any right and no course of dealing between Buyer and Omron shall operate as a waiver of rights by Omron. (b) Assignment. Buyer may not assign its rights hereunder without Omron's written consent. (c) Law. These Terms are governed by the law of the jurisdiction of the home office of the Omron company from which Buyer is purchasing the Products (without regard to conflict of law principles). (d) Amendment. These Terms constitute the entire agreement between Buyer and Omron relating to the Products, and no provision may be changed or waived unless in writing signed by the parties. (e) Severability. If any provision hereof is rendered ineffective or invalid, such provision shall not invalidate any other provision. (f) Setoff. Buyer shall have no right to set off any amounts against the amount owing in respect of this invoice. (g) Definitions. As used herein, "including" means "including without limitation"; and "Omron Companies" (or similar words) mean Omron Corporation and any direct or indirect subsidiary or affiliate thereof.

Certain Precautions on Specifications and Use

1. Suitability of Use. Omron Companies shall not be responsible for conformity with any standards, codes or regulations which apply to the combination of the Product in the Buyer's application or use of the Product. At Buyer's request, Omron will provide applicable third party certification documents identifying ratings and limitations of use which apply to the Product. This information by itself is not sufficient for a complete determination of the suitability of the Product in combination with the end product, machine, system, or other application or use. Buyer shall be solely responsible for determining appropriateness of the particular Product with respect to Buyer's application, product or system. Buyer shall take application responsibility in all cases but the following is a non-exhaustive list of applications for which particular attention must be given:
   (i) Outdoor use, uses involving potential chemical contamination or electrical interference, or conditions or uses not described in this document.
   (ii) Use in consumer products or any use in significant quantities.
   (iii) Energy control systems, combustion systems, railroad systems, aviation systems, medical equipment, amusement machines, vehicles, safety equipment, and installations subject to separate industry or government regulations.
   (iv) Systems, machines and equipment that could present a risk to life or property. Please know and observe all prohibitions of use applicable to this Product.
   NEVER USE THE PRODUCT FOR AN APPLICATION INVOLVING SERIOUS RISK TO LIFE OR PROPERTY OR IN LARGE QUANTITIES WITHOUT ENSURING THAT THE SYSTEM AS A WHOLE HAS BEEN DESIGNED TO ADDRESS THE RISKS, AND THAT THE OMRON'S PRODUCT IS PROPERLY RATED AND INSTALLED FOR THE INTENDED USE WITHIN THE OVERALL EQUIPMENT OR SYSTEM.
2. Programmable Products. Omron Companies shall not be responsible for the user's programming of a programmable Product, or any consequence thereof.
3. Performance Data. Data presented in Omron Company websites, catalogs and other materials is provided as a guide for the user in determining suitability and does not constitute a warranty. It may represent the result of Omron's test conditions, and the user must correlate it to actual application requirements. Actual performance is subject to the Omron's Warranty and Limitations of Liability.
4. Change in Specifications. Product specifications and accessories may be changed at any time based on improvements and other reasons. It is our practice to change part numbers when published ratings or features are changed, or when significant construction changes are made. However, some specifications of the Product may be changed without any notice. When in doubt, special part numbers may be assigned to fix or establish key specifications for your application. Please consult with your Omron's representative at any time to confirm actual specifications of purchased Product.
5. Errors and Omissions. Information presented by Omron Companies has been checked and is believed to be accurate; however, no responsibility is assumed for clerical, typographical or proofreading errors or omissions.

OMRON
AUTOMATION & SAFETY

OMRON AUTOMATION AND SAFETY • THE AMERICAS HEADQUARTERS • Chicago, IL USA • 847.843.7900 • 800.556.6766 • www.omron247.com

OMRON CANADA, INC. • HEAD OFFICE
Toronto, ON, Canada • 416.286.6465 • 866.986.6766 • www.omron247.com

OMRON ELECTRONICS DE MEXICO • HEAD OFFICE
México DF • 52.55.59.01.43.00 • 01-800-226-6766 • mela@omron.com

OMRON ELECTRONICS DE MEXICO • SALES OFFICE
Apodaca, N.L. • 52.81.11.56.99.20 • 01-800-226-6766 • mela@omron.com

OMRON ELETRÔNICA DO BRASIL LTDA • HEAD OFFICE
São Paulo, SP, Brasil • 55.11.2101.6300 • www.omron.com.br

OMRON ARGENTINA • SALES OFFICE
Cono Sur • 54.11.4783.5300

OMRON CHILE • SALES OFFICE
Santiago • 56.9.9917.3920

OTHER OMRON LATIN AMERICA SALES
54.11.4783.5300

OMRON EUROPE B.V. • Wegalaan 67-69, NL-2132 JD, Hoofddorp, The Netherlands. • +31 (0) 23 568 13 00 • www.industrial.omron.eu

Authorized Distributor:

Automation Control Systems
• Machine Automation Controllers (MAC) • Programmable Controllers (PLC)
• Operator interfaces (HMI) • Distributed I/O • Software

Drives & Motion Controls
• Servo & AC Drives • Motion Controllers & Encoders

Temperature & Process Controllers
• Single and Multi-loop Controllers

Sensors & Vision
• Proximity Sensors • Photoelectric Sensors • Fiber-Optic Sensors
• Amplified Photomicrosensors • Measurement Sensors
• Ultrasonic Sensors • Vision Sensors

Industrial Components
• RFID/Code Readers • Relays • Pushbuttons & Indicators
• Limit and Basic Switches • Timers • Counters • Metering Devices
• Power Supplies

Safety
• Laser Scanners • Safety Mats • Edges and Bumpers • Programmable Safety Controllers • Light Curtains • Safety Relays • Safety Interlock Switches

C58I-E-01 03/15 Note: Specifications are subject to change. © 2015 Omron Electronics LLC Printed in U.S.A.

Printed on recycled paper.