Slim I/O Relays
G2RV-SR/G3RV-SR

Global standard size, low profile slim (6.2 mm width) I/O relays

- 25% lower profile than conventional products, contributing to a smaller control panel.
- Push-In Plus terminal blocks reduce wiring work by 60%* compared to conventional screw terminals.
- 'Hand-free' structure that holds an inserted flat-blade screwdriver to achieve easier wiring work for stranded wires.
- Electromechanical relays (G2RV-SR) and solid state relays (G3RV-SR) are available.
- Screw terminal terminal block models are available.
- Plug-in terminal has strong mechanical pins that do not bend.

✻ According to OMRON actual measurement data from November 2015.

G2RV-SR:

G3RV-SR:



For the recent information on models that have been certified for safety standards, refer to your OMRON website.

⚠ Refer to *Safety Precautions* on page 20.

Slim I/O Relay Types

G2RV-SR series mounted relay: electromagnetic relay ..... from page 2
G3RV-SR series mounted relay: solid state relay ..... from page 10

Common matter

Common precautions ..... from page 20
Common accessories (order separately)..... page 24

Slim Electromechanical I/O Relay
G2RV-SR

Global standard size, low profile, slim (6.2 mm width) I/O relay

- 25% lower profile than conventional products, contributing to a smaller control panel.
- Opening and closing ability with one pole 6 A slim shape.
- Micro load products for one pole 50 mA using gold-plated contacts for small load switching also available.
- Since G2RV has a transparent case, confirming the state of the contact with the naked eye is possible.
- Screw terminal terminal block models are available.
- Plug-in type terminal has strong mechanical pins that do not bend.

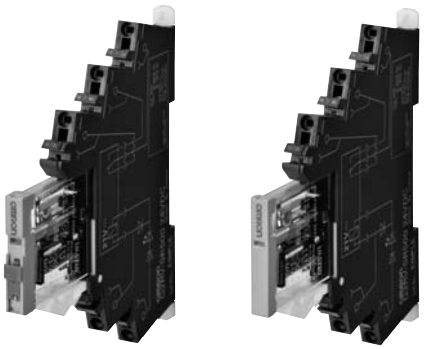

For the recent information on models that have been certified for safety standards, refer to your OMRON website.

⚠ Refer to *Safety Precautions* on page 20.

Features

Standard model/Micro load

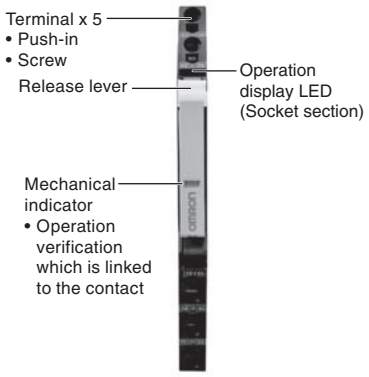

With latching lever (Test switch)

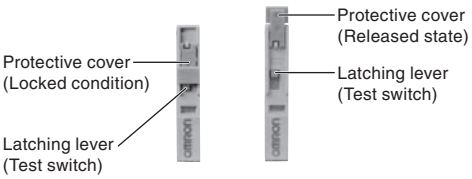

• Circuit check operation Confirmation, reducing the inspection effort

PAT

"Foreign matter intrusion prevention structure"
"Malfunction prevention stopper"

Push-In Plus Terminal Block

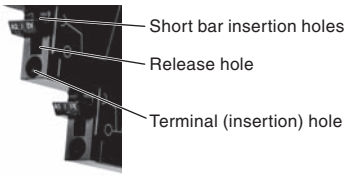

Transparent case

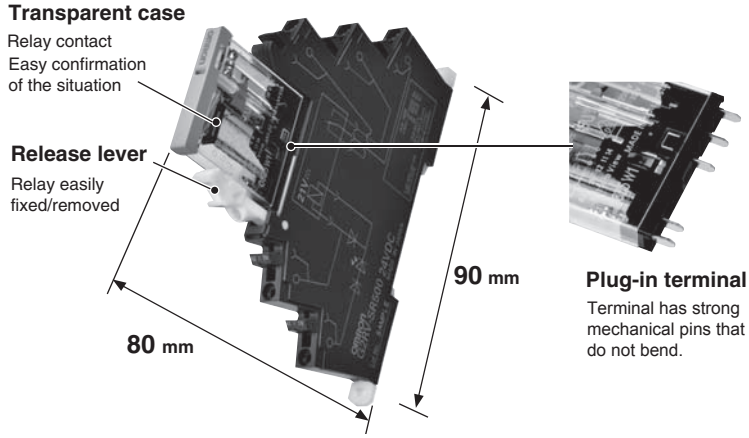

Plug-in terminal

Terminal has strong mechanical pins that do not bend.

Model Number Structure

Model Number Legend

G2RV-SR □□ □ - □ □
(1) (2) (3) (4) (5) (6)

(1) Basic model name
G2RV: Slim I/O Relay

(2) Sub type
SR: Slim relay + integrated low profile socket

(3) Terminal (wire connection)
50: Push-In Plus Terminal
70: Screw terminal

(4) Latching lever (test switch)
0: Without latching lever
1: With latching lever

(5) Contact structure
Blank: Standard
AP: Microloads

(6) Rated input voltage
12, 24 VDC
24, 48 VAC/VC
100, 110, 200, 230 VAC

Ordering Information

Terminal (Wire connection)	Classification	Latching lever (Test switch)	Rated input voltage (V)		Model
Push-In Plus Terminal	Standard	No	DC	12	**G2RV-SR500 DC12**
				24	**G2RV-SR500 DC24**
			AC/DC	24	**G2RV-SR500 AC/DC24**
				48	**G2RV-SR500 AC/DC48**
			AC	100	**G2RV-SR500 AC100**
				110	**G2RV-SR500 AC110**
				200	**G2RV-SR500 AC200**
				230	**G2RV-SR500 AC230**
		Yes	DC	24	**G2RV-SR501 DC24**
			AC/DC	24	**G2RV-SR501 AC/DC24**
	Microloads	No	DC	12	**G2RV-SR500-AP DC12**
				24	**G2RV-SR500-AP DC24**
			AC/DC	24	**G2RV-SR500-AP AC/DC24**
				48	**G2RV-SR500-AP AC/DC48**
			AC	100	**G2RV-SR500-AP AC100**
				110	**G2RV-SR500-AP AC110**
				200	**G2RV-SR500-AP AC200**
				230	**G2RV-SR500-AP AC230**
Screw terminal	Standard	No	DC	12	**G2RV-SR700 DC12**
				24	**G2RV-SR700 DC24**
			AC/DC	24	**G2RV-SR700 AC/DC24**
				48	**G2RV-SR700 AC/DC48**
			AC	100	**G2RV-SR700 AC100**
				110	**G2RV-SR700 AC110**
				200	**G2RV-SR700 AC200**
				230	**G2RV-SR700 AC230**
		Yes	DC	24	**G2RV-SR701 DC24**
			AC/DC	24	**G2RV-SR701 AC/DC24**
	Microloads	No	DC	12	**G2RV-SR700-AP DC12**
				24	**G2RV-SR700-AP DC24**
			AC/DC	24	**G2RV-SR700-AP AC/DC24**
				48	**G2RV-SR700-AP AC/DC48**
			AC	100	**G2RV-SR700-AP AC100**
				110	**G2RV-SR700-AP AC110**
				200	**G2RV-SR700-AP AC200**
				230	**G2RV-SR700-AP AC230**

Note: Solid wire cannot be used for Push-In Plus terminal type. Make sure to use stranded wire or stranded wire with ferrules.

Relay for Maintenance

Model Number Legend

G2RV-1 - S □ - □ - G □
(1) (2) (3) (4) (5) (6)

(1) No. of poles
1: 1 pole

(2) Terminal
S: plug-in

(3) Latching lever (Test switch)
Blank: Without latching lever
I: With latching lever

(4) Contact material
Blank: Silver alloy
AP: Silver alloy + gold plate

(5) Types of relay for exchange
G: G2RV-SR series equipped Relay

(6) Rated coil voltage
Number: 11, 21, 48 VDC

G2RV-1-SI-G



G2RV-1-S-G(-AP)



List of Models

Type	Latching Lever (Test switch)	Rated coil voltage (V)		Model	Applicable model
Standard	No	DC	11	**G2RV-1-S-G DC11**	G2RV-SR700/500 DC12V
			21	**G2RV-1-S-G DC21**	G2RV-SR700/500 DC24V
					G2RV-SR700/500 AC/DC24V
			48	**G2RV-1-S-G DC48**	G2RV-SR700/500 AC/DC48V
					G2RV-SR700/500 AC100V
					G2RV-SR700/500 AC110V
					G2RV-SR700/500 AC200V
					G2RV-SR700/500 AC230V
	Yes	DC	21	**G2RV-1-SI-G DC21**	G2RV-SR701/501 DC24V
					G2RV-SR701/501 AC/DC24V
Microload	No	DC	11	**G2RV-1-S-AP-G DC11**	G2RV-SR700/500-AP DC12V
			21	**G2RV-1-S-AP-G DC21**	G2RV-SR700/500-AP DC24V
					G2RV-SR700/500-AP AC/DC24V
			48	**G2RV-1-S-AP-G DC48**	G2RV-SR700/500-AP AC/DC48V
					G2RV-SR700/500-AP AC100V
					G2RV-SR700/500-AP AC110V
					G2RV-SR700/500-AP AC200V
					G2RV-SR700/500-AP AC230V

Specifications

Ratings

Coil ratings

Rated input voltage	Rated current			Operation voltage	Release voltage	Power consumption		Maximum allowable voltage
	AC		DC	Percentage of the rated voltage		AC (VA)	DC (mW)	Percentage of the rated voltage
	50 Hz	60 Hz						
12 VDC	–	–	27.2 mA	80% max.*	10% min.	–	Approx. 300 mW	110%
24 VDC	–	–	13.3 mA			–	Approx. 300 mW	
24 VAC/VDC	21.1 mA	22.5 mA	13.0 mA			Approx. 0.5 VA	Approx. 300 mW	
48 VAC/VDC	8.5 mA	9.0 mA	5.2 mA			Approx. 0.4 VA	Approx. 250 mW	
100 VAC	7.1 mA	7.5 mA	–			Approx. 0.8 VA	–	
110 VAC	7.1 mA	7.5 mA	–			Approx. 0.8 VA	–	
200 VAC	7.2 mA	7.9 mA	–			Approx. 1.7 VA	–	
230 VAC	7.3 mA	7.9 mA	–			Approx. 1.7 VA	–	

Note: The operating characteristics are measured at ambient temperature of 23°C.

✻ Operating voltage will be 85% max. for upside down mounting.

Contact ratings

Item	Standard (G2RV-SR700, 500, 701, 501)		For microloads (G2RV-SR700-AP, 500-AP) *2
Contact configuration	SPDT		
Load	Resistive load (cosϕ=1)	Inductive load (cosϕ=0.4, L/R=7ms)	Resistive load (cosϕ=1)
Rated load	6 A at 250 VAC 6 A at 30 VDC	2.5 A at 250 VAC 2 A at 30 VDC	50 mA at 30 VAC 50 mA at 36 VDC
Rated carry current	6 A		50 mA
Maximum switching voltage	440 VAC, 125 VDC		30 VAC, 36 VDC
Maximum switching current	6 A		50 mA
Maximum switching power	1,500 VA 180 W	500 VA 60 W	–
Failure rate P value (reference value) *1	10 mA at 5 VDC		1 mA at 100 mVDC

✻**1.** P level: $\lambda_{60}=0.1\times10^{-6}$/times
This value is the value in switching frequency 120 operations/min.

✻**2.** If the gold plating layer is destroyed, the number will be the same as the standard type.

Characteristics

Item		Standard (G2RV-SR700, 500, 701, 501)	For microloads (G2RV-SR700-AP, 500-AP)
Contact resistance *		100 mΩ max.	
Operate (Set) time *		20 ms max.	
Release time *		AC, AC/DC: 40 ms max. DC: 20 ms max.	
Maximum operating frequency		Mechanical: 18,000 operations/h Electrical: 1,800 operations/h (rated load)	
Insulation resistance		1,000 MΩ min. (at 500 VDC)	
Dielectric strength		Between coil and contacts: 4,000VAC 50/60 Hz 1 min Contact between the same polarity: 1,000 VAC 50/60 Hz 1 min	
Vibration resistance		Destruction: 10 to 55 to 10 Hz, single amplitude 0.50 mm (double amplitude 1.0 mm) Malfunction: 10 to 55 to 10 Hz, single amplitude 0.50 mm (double amplitude 1.0 mm)	
Shock resistance		Destruction: 1,000 m/s^2 Malfunction: Energized 200m/s^2, Non-energized 100m/s^2	
Endurance *	**Mechanical**	5,000,000 operations min.	
	Electrical	NO contact: 70,000 operations min. NC contact: 50,000 operations min.	5,000,000 operations min.
Ambient operating temperature		Operating: –40 to +55°C (with no icing or condensation)	
Ambient operating humidity		Operating: 5 to 85% RH	
Weight		Approx. 30 g	
Contact material		Ag alloy	Ag alloy + Au plating

Note: Above values are initial values.

✻ Value is at ambient temperature of 23°C.

Approved standards

UL508 (file No.E41643)

Model	No. of poles	Operation coil ratings	Contact ratings	Operations
G2RV-SR series	SPDT	12 to 48 VDC 24 to 230 VAC	6 A at 250 VAC (Resistive load) 6 A at 30 VDC (Resistive load) 2 A at 400 VAC (Resistive load)*	6,000

* If the load voltage exceeds 250 VAC, please attach with a spacing of 12 mm min., or use a separate plate (XW5Z-EP12).

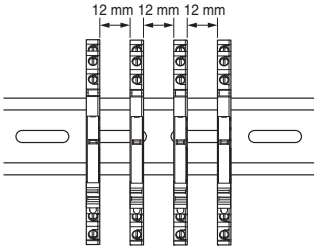

VDE (EN 61810-1)

Model	No. of poles	Operation coil ratings	Contact ratings	Operations
G2RV-SR series	SPDT	12, 24 VDC 24, 48 VAC/VDC 100, 110, 200, 230 VAC	6 A at 250 VAC (Resistive load) 6 A at 30 VDC (Resistive load) 2 A at 400 VAC (Resistive load)*	50,000 50,000 6,000

* If the load voltage exceeds 250 VAC, please attach with a spacing of 12 mm min., or use a separate plate (XW5Z-EP12).

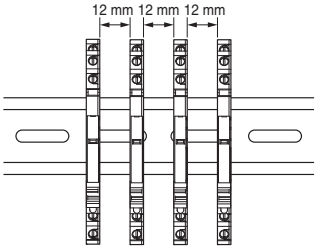

Engineering Data

Endurance curve (N.O. side)

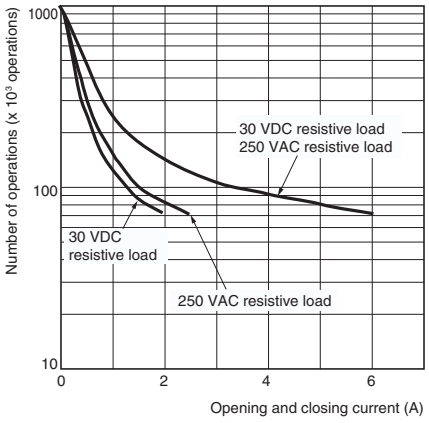

Switching capacity of DC resistive load

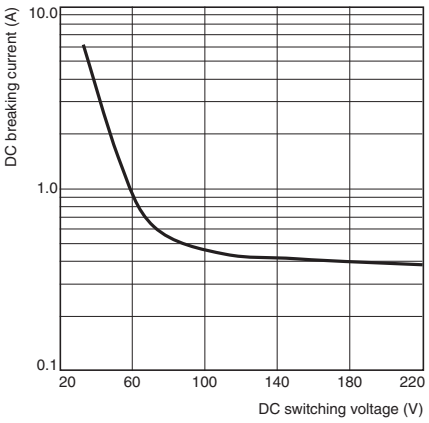

Dimensions

(unit: mm)

Slim I/O Relay + socket

Push-In Plus Terminal Block

Models without latching lever (without test switch)
G2RV-SR500
G2RV-SR500-AP

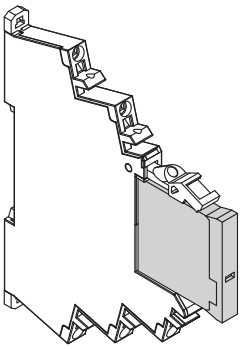

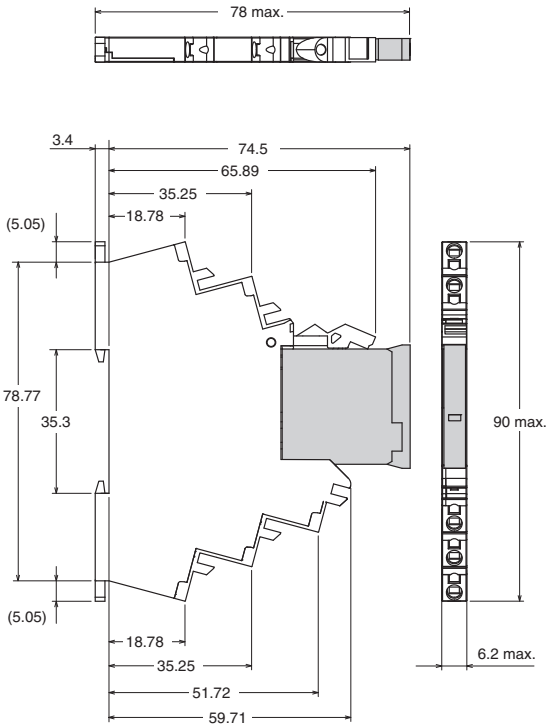

Terminal Arrangement/Internal Connection Diagram (TOP VIEW)

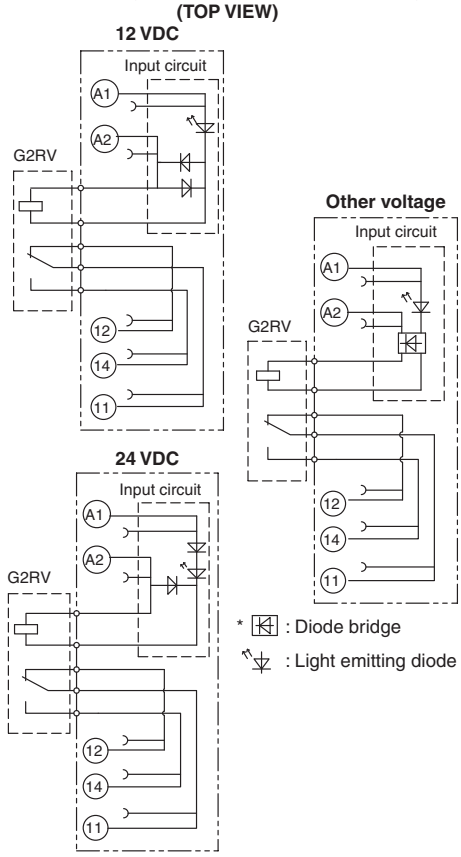

Models with latching lever (with test switch)
G2RV-SR501

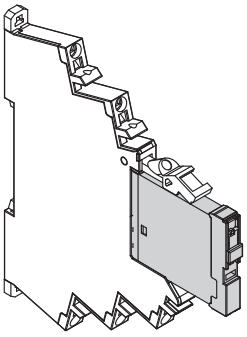

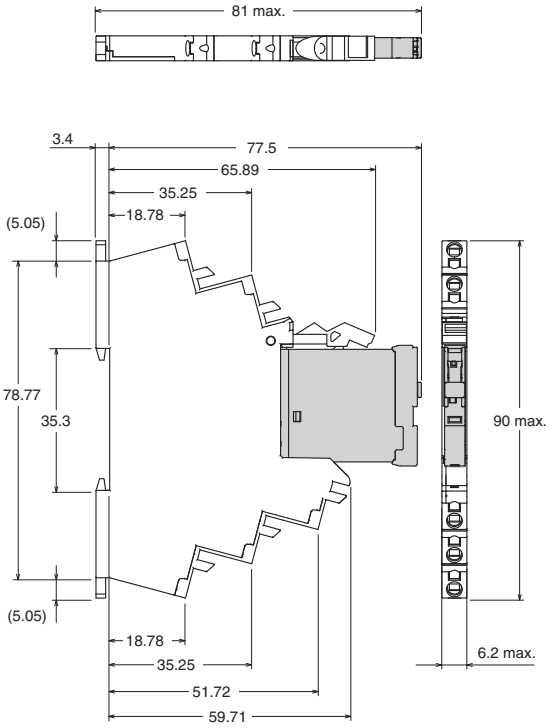

Terminal Arrangement/Internal Connection Diagram (TOP VIEW)

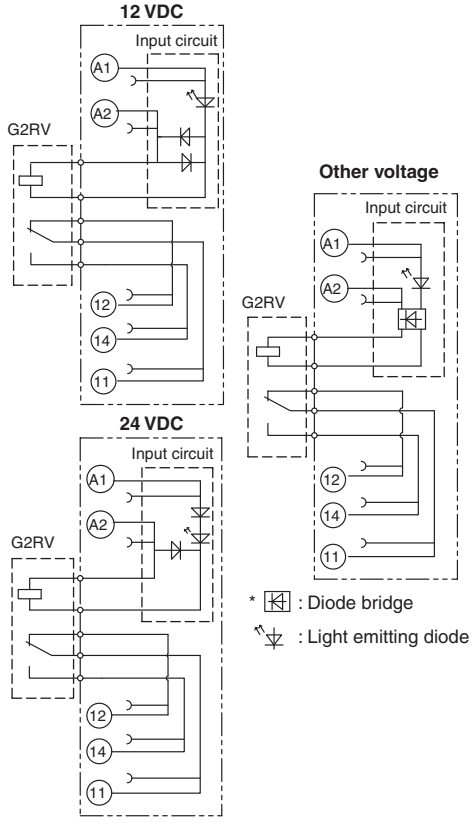

Screw terminal

Models without latching lever (without test switch)
G2RV-SR700
G2RV-SR700-AP

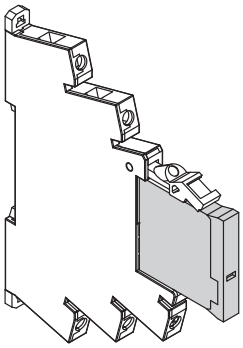

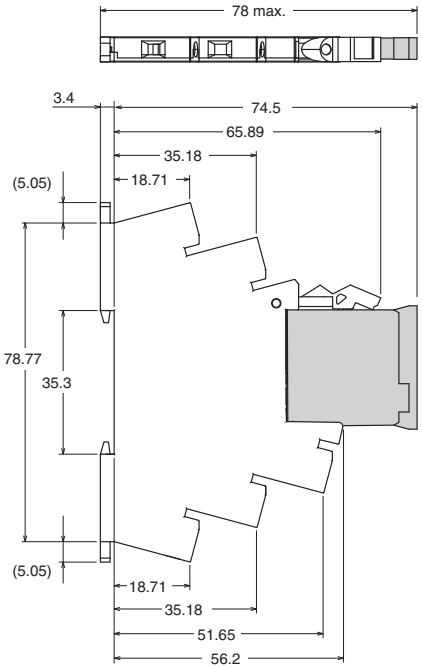

Terminal Arrangement/Internal Connection Diagram (TOP VIEW)

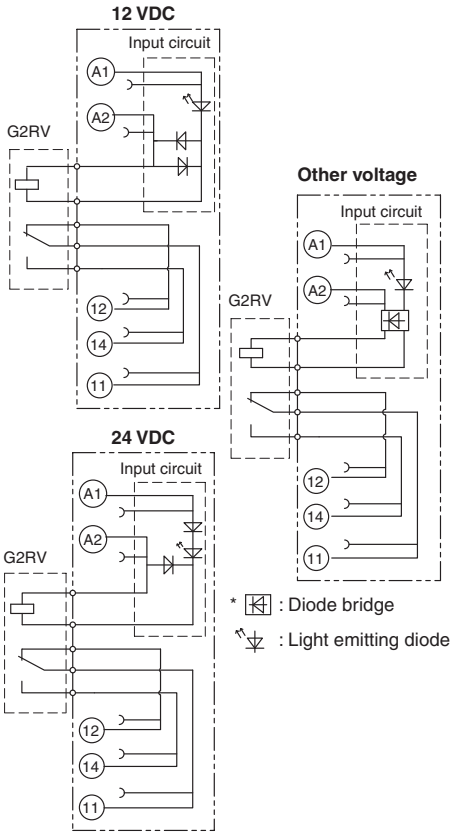

Models with latching lever (with test switch)
G2RV-SR701

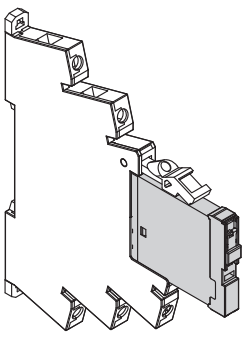

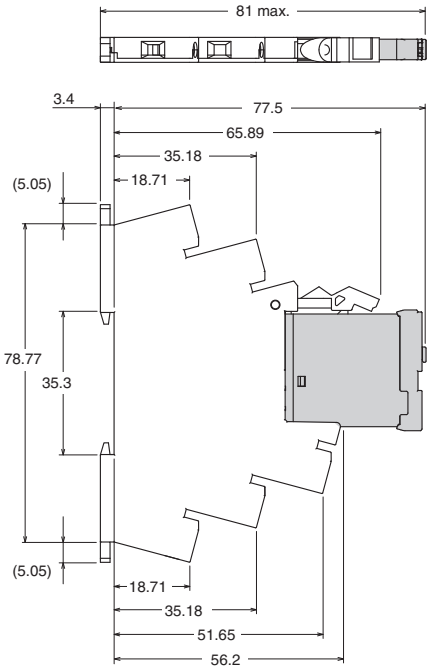

Terminal Arrangement/Internal Connection Diagram (TOP VIEW)

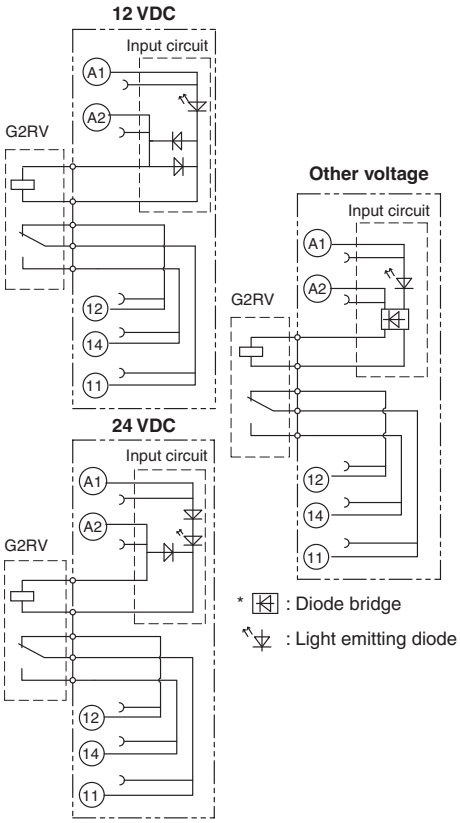

Relay for maintenance

Models without latching lever
G2RV-1-S-G
G2RV-1-S-AP-G



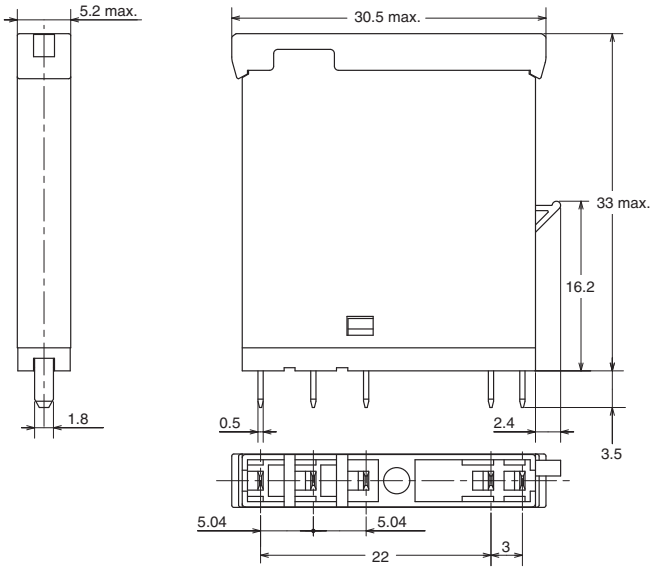

Terminal Arrangement/ Internal Connection Diagram (TOP VIEW)

(Input circuit)

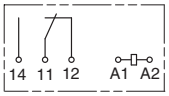

Models with latching lever (test switch)
G2RV-1-SI-G



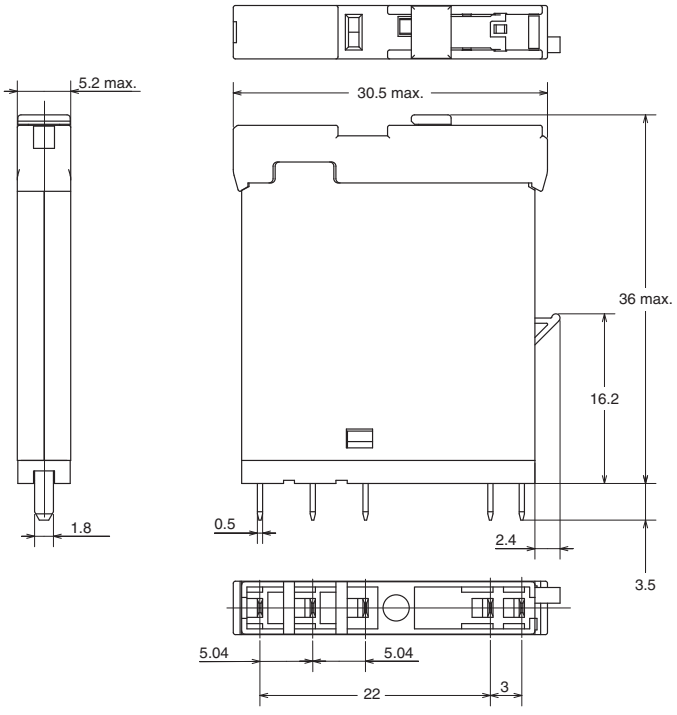

Terminal Arrangement/ Internal Connection Diagram (TOP VIEW)

(Input circuit)

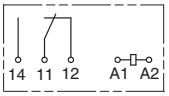

Slim I/O Solid State Relay

G3RV-SR

Global standard size, low profile, slim (6.2 mm width) I/O solid state relay.

- 25% lower profile than conventional products, contributing to a smaller control panel.
- Optimal slim, high frequency, high-speed opening and closing SSR (solid state relay).
- Slim shape with a switching capacity up to 3 A (DC), and 2 A (AC).
- Because MOSFET is used for the outlet element for the DC load, opening and closing load of 100 μA to 3 A is possible.
- Check operating status at a glance with the operating display LED.
- Mounted I/O SSR (solid-state relay) uses plug-in terminals with strong mechanical pins that do not bend.

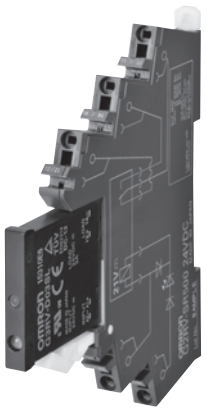

For the recent information on models that have been certified for safety standards, refer to your OMRON website.

⚠ Refer to *Safety Precautions* on page 20.

Features

Push-In Plus Terminal Block

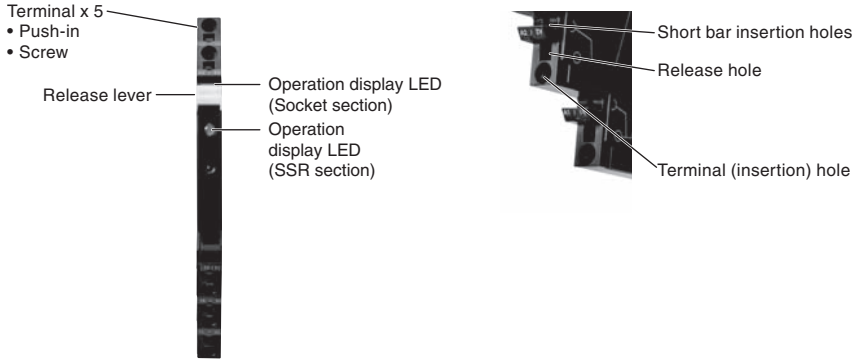

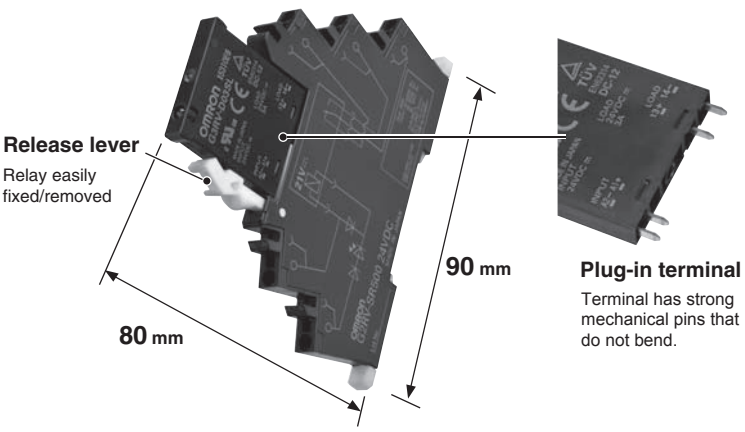

Model Number Structure

Model Number Legend

G3RV-SR □□□ - □ □
(1) (2) (3) (4) (5)

(1) Basic model name
G3RV: Slim I/O Solid State Relay

(2) Sub type
SR: Slim solid relay + integrated low profile socket

(3) Terminal (wire connection)
500: Push-In Plus Terminal
700: Screw terminal

(4) Output voltage specification
A : AC output (triac) zero cross function available
AL : AC output (triac) zero cross function not available
D : DC output (MOS FET)

(5) Rated voltage input
12, 24 VDC
24, 48 VAC/VDC
100, 110, 200, 230 VAC

Ordering Information

Terminal (wire connection)	Applicable output load	Zero cross function	Rated input voltage (V)		Model
Push-In Plus Terminal	DC load	—	DC	12	**G3RV-SR500-D DC12**
				24	**G3RV-SR500-D DC24**
			AC/DC	24	**G3RV-SR500-D AC/DC24**
				48	**G3RV-SR500-D AC/DC48**
			AC	100	**G3RV-SR500-D AC100**
				110	**G3RV-SR500-D AC110**
				200	**G3RV-SR500-D AC200**
				230	**G3RV-SR500-D AC230**
	AC load	Yes	DC	12	**G3RV-SR500-A DC12**
				24	**G3RV-SR500-A DC24**
			AC/DC	24	**G3RV-SR500-A AC/DC24**
				48	**G3RV-SR500-A AC/DC48**
			AC	100	**G3RV-SR500-A AC100**
				110	**G3RV-SR500-A AC110**
				200	**G3RV-SR500-A AC200**
				230	**G3RV-SR500-A AC230**
		No	DC	12	**G3RV-SR500-AL DC12**
				24	**G3RV-SR500-AL DC24**
			AC/DC	24	**G3RV-SR500-AL AC/DC24**
				48	**G3RV-SR500-AL AC/DC48**
			AC	100	**G3RV-SR500-AL AC100**
				110	**G3RV-SR500-AL AC110**
				200	**G3RV-SR500-AL AC200**
				230	**G3RV-SR500-AL AC230**
Screw terminal	DC load	—	DC	12	**G3RV-SR700-D DC12**
				24	**G3RV-SR700-D DC24**
			AC/DC	24	**G3RV-SR700-D AC/DC24**
				48	**G3RV-SR700-D AC/DC48**
			AC	100	**G3RV-SR700-D AC100**
				110	**G3RV-SR700-D AC110**
				200	**G3RV-SR700-D AC200**
				230	**G3RV-SR700-D AC230**
	AC load	Yes	DC	12	**G3RV-SR700-A DC12**
				24	**G3RV-SR700-A DC24**
			AC/DC	24	**G3RV-SR700-A AC/DC24**
				48	**G3RV-SR700-A AC/DC48**
			AC	100	**G3RV-SR700-A AC100**
				110	**G3RV-SR700-A AC110**
				200	**G3RV-SR700-A AC200**
				230	**G3RV-SR700-A AC230**
		No	DC	12	**G3RV-SR700-AL DC12**
				24	**G3RV-SR700-AL DC24**
			AC/DC	24	**G3RV-SR700-AL AC/DC24**
				48	**G3RV-SR700-AL AC/DC48**
			AC	100	**G3RV-SR700-AL AC100**
				110	**G3RV-SR700-AL AC110**
				200	**G3RV-SR700-AL AC200**
				230	**G3RV-SR700-AL AC230**

Note: Solid wire cannot be used for Push-In Plus terminal type. Make sure to use stranded wire or stranded wire with ferrules.

Solid state relay for maintenance

Model Number Legend

G3RV-□ □ S □ □
(1) (2) (3) (4) (5)

(1) Output voltage specification
D: DC output
2: AC output

(2) Rated current
02: AC output 2 A
03: DC output 3 A

(3) Terminal
S: Plug-in type

(4) Zero cross functions
Blank: Zero cross function available
L: Zero cross function not available

(5) Rated input voltage
Number: 12, 24, 48 VDC



List of Models

Insulation method	Operation Display	Output (SSR)	Zero cross Function	Rated output Load *	Rated input voltage (socket)	Model	Applicable model
Photo-triac	Yes (green)	AC	Yes	2 A (at 100 to 240 VAC)	12 VDC	**G3RV-202S DC12**	G3RV-SR700/500-A DC12V
					24 VDC	**G3RV-202S DC24**	G3RV-SR700/500-A DC24V
					24 VAC/VDC		G3RV-SR700/500-A AC/DC24V
					48 VAC/VDC	**G3RV-202S DC48**	G3RV-SR700/500-A AC/DC48V
					100 VAC		G3RV-SR700/500-A AC100V
					110 VAC		G3RV-SR700/500-A AC110V
					200 VAC		G3RV-SR700/500-A AC200V
					230 VAC		G3RV-SR700/500-A AC230V
			No		12 VDC	**G3RV-202SL DC12**	G3RV-SR700/500-AL DC12V
					24 VDC	**G3RV-202SL DC24**	G3RV-SR700/500-AL DC24V
					24 VAC/VDC		G3RV-SR700/500-AL AC/DC24V
					48 VAC/VDC	**G3RV-202SL DC48**	G3RV-SR700/500-AL AC/DC48V
					100 VAC		G3RV-SR700/500-AL AC100V
					110 VAC		G3RV-SR700/500-AL AC110V
					200 VAC		G3RV-SR700/500-AL AC200V
					230 VAC		G3RV-SR700/500-AL AC230V
Photo-voltage coupler		DC	–	3 A (at 5 to 24 VDC)	12 VDC	**G3RV-D03SL DC12**	G3RV-SR700/500-D DC12V
					24 VDC	**G3RV-D03SL DC24**	G3RV-SR700/500-D DC24V
					24 VAC/VDC		G3RV-SR700/500-D AC/DC24V
					48 VAC/VDC	**G3RV-D03SL DC48**	G3RV-SR700/500-D AC/DC48V
					100 VAC		G3RV-SR700/500-D AC100V
					110 VAC		G3RV-SR700/500-D AC110V
					200 VAC		G3RV-SR700/500-D AC200V
					230 VAC		G3RV-SR700/500-D AC230V

✻ Different depending on the ambient temperature.
For more details, refer to *Load current vs. ambient rated temperature* on page 16.

Specifications

Rating (ambient temperature 25°C)

Input

G3RV-SR700/500-A series

Rated input voltage	Rated current			Operation voltage	Release voltage	Input voltage
	AC		DC			Percentage of the rated voltage
	50 Hz	60 Hz				
12 VDC	–	–	15 mA	10.8 V max.	1 V min.	±10%
24 VDC	–	–	12 mA	21.6 V max.		
24 VAC/VDC	20 mA	21 mA	11 mA	21.6 V max.		
48 VAC/VDC	10 mA	11 mA	6 mA	43.2 V max.		
100 VAC	7.5 mA	7.5 mA	–	90 V max.		
110 VAC	7.5 mA	7.7 mA	–	99 V max.		
200 VAC	7.3 mA	8.6 mA	–	180 V max.		
230 VAC	7.3 mA	8.6 mA	–	207 V max.		

G3RV-SR700/500-AL series

Rated input voltage	Rated current			Operation voltage	Release voltage	Input voltage
	AC		DC			Percentage of the rated voltage
	50 Hz	60 Hz				
12 VDC	–	–	15 mA	10.8 V max.	1 V min.	±10%
24 VDC	–	–	12 mA	21.6 V max.		
24 VAC/VDC	20 mA	21 mA	11 mA	21.6 V max.		
48 VAC/VDC	10 mA	11 mA	6 mA	43.2 V max.		
100 VAC	7.5 mA	7.7 mA	–	90 V max.		
110 VAC	7.5 mA	7.7 mA	–	99 V max.		
200 VAC	7.3 mA	8.6 mA	–	180 V max.		
230 VAC	7.3 mA	8.6 mA	–	207 V max.		

G3RV-SR700/500-D series

Rated input voltage	Rated current			Operation voltage	Release voltage	Input voltage
	AC		DC			Percentage of the rated voltage
	50 Hz	60 Hz				
12 VDC	–	–	8 mA	10.8 V max.	1 V min.	±10%
24 VDC	–	–	4.5 mA	21.6 V max.		
24 VAC/VDC	10.7 mA	11.1 mA	4.3 mA	21.6 V max.		
48 VAC/VDC	9.6 mA	10.2 mA	6 mA	43.2 V max.		
100 VAC	6.8 mA	7.2 mA	–	90 V max.		
110 VAC	6.8 mA	7.2 mA	–	99 V max.		
200 VAC	6.8 mA	8.1 mA	–	180 V max.		
230 VAC	6.8 mA	8.1 mA	–	207 V max.		

Output

Item	G3RV-SR700/500-A(L)	G3RV-SR700/500-D
Rated load voltage	100 to 240 VAC (50/60 Hz)	5 to 24 VDC
Load voltage range	75 to 264 VAC (50/60 Hz)	3 to 26.4 VDC
Load current	0.1 to 2 A (Ambient temperature=25°C)	100 μA to 3 A (Ambient temperature=25°C)
Inrush current resistance	30 A (60 Hz, 1 cycle)	30 A (60 Hz, 1 cycle)
Permissible I^2t; Joule integral value (reference value)	$15A^2s$	$9\ A^2\ s$
Applied load capacity	400 W (Output voltage: 200 VAC)	72 W (Output voltage: 24 VDC)

Characteristics

Item	G3RV-SR700/500-A	G3RV-SR700/500-AL	G3RV-SR700/500-D
Operate time	1/2 cycle of load power supply +1 ms max.	3 ms max.	6 ms max.
Release time	60 ms max.	60 ms max.	60 ms max.
Output ON voltage drop	1.6 V (RMS) max.		–
Output ON resistance	–		0.3 Ω max. (at 24 VDC)
Leakage current	5 mA max. (at 200 VAC, 50/60 Hz)		10 μA max. (at 24 VDC)
Insulation resistance	100 MΩ min. (at 500 VDC)		
Dielectric strength	Between input and output 2,500 VAC 50/60 Hz 1 min		
Vibration resistance	Malfunction: 10 to 55 to 10 Hz double amplitude 0.70 mm		
Shock resistance	300m/s^2		
Ambient operating temperature	Storage: –30 to +100°C (with no icing or no condensation) Operating: –30 to +55°C (with no icing or no condensation)		
Ambient operating humidity	45 to 85% RH		
Weight	Approx. 38 g		
Pollution degree	2		
The degree of protection by IEC60529	IP20		
Rated impulse dielectric strength	4.0 kV/III		
Load category	LC-A		DC-12
Overload current profile	1.5Ie 1.1Ue 5s ON, 10s OFF, 10 cycles		
Rated insulation voltage	240 V		

Approved standards

UL 508 (file No.E64562)

Model	Input ratings	Contact ratings
G3RV-SR700/500-D series	12, 24 VDC 24, 48 VAC/VDC 100, 110, 200, 230 VAC	24 VDC 3 A (resistive load) at 25°C
G3RV-SR700/500-A(L) series	12, 24 VDC 24, 48 VAC/DC 100, 110, 200, 230 VAC	240 VAC 2 A (resistive load) at 25°C

TÜV 62314

Model	Input ratings	Contact ratings
G3RV-SR700/500-D series	12, 24 VDC 24, 48 VAC/VDC 100, 110, 200, 230 VAC	24 VDC 3 A (resistive load)
G3RV-SR700/500-A(L) series	12, 24 VDC 24, 48 VAC/VDC 100, 110, 200, 230 VAC	240 VAC 2 A (resistive load)

Engineering Data

Load current vs. ambient rated temperature

G3RV-SR700/500-A(L) series

Product mounting spacing 10 mm (Separate Mounting)

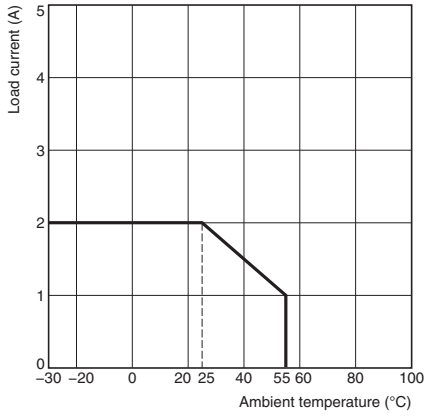

Close mounting (up to 5 units *)

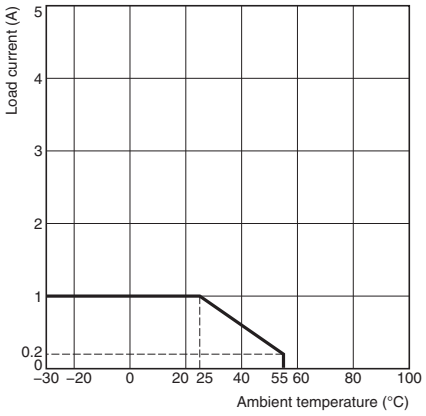

G3RV-SR700/500-D series

Product mounting spacing 10 mm (Separate Mounting)

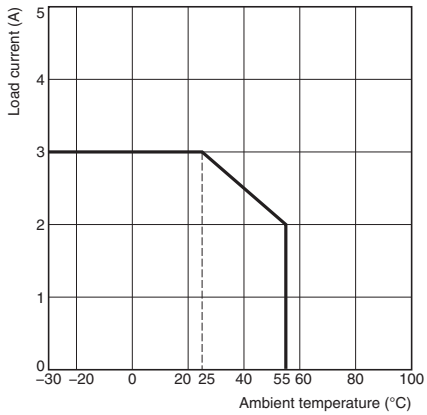

Close mounting (up to 5 units *)

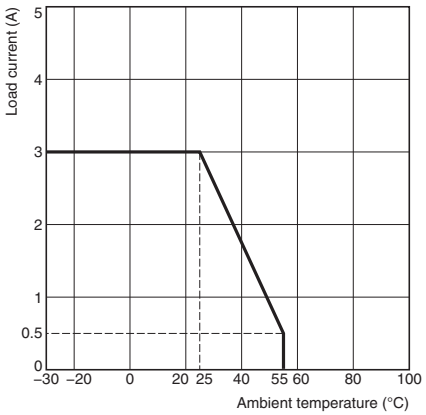

✻ When five or more are installed, install with 10 mm space between each.
For details, please refer to *Mounting* on page 23.

Inrush Current Resistance: Non-repetitive

Keep the inrush current to below the inrush current resistance value (i.e., below the broken line) if it occurs repetitively.

G3RV-SR700/500-A(L) series

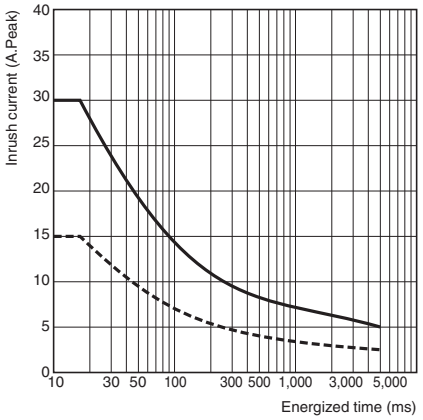

G3RV-SR700/500-D series

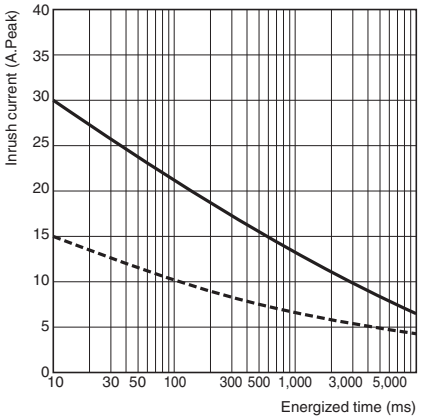

Dimensions

(unit: mm)

Solid state relay + socket

Push-In Plus Terminal Block

G3RV-SR500

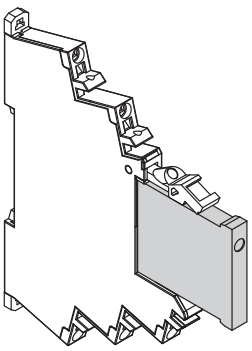

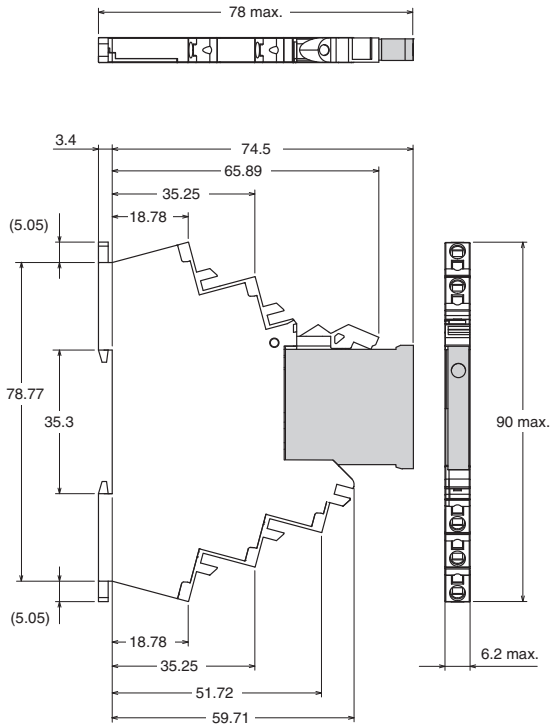

Terminal Arrangement/ Internal Connection Diagram (TOP VIEW)

12 VDC

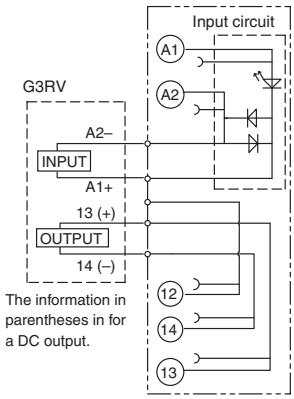

24 VDC

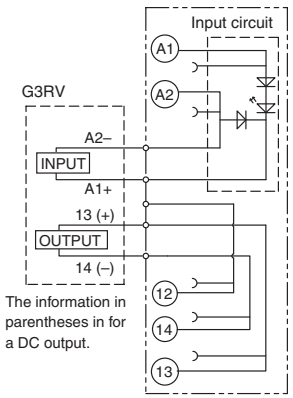

Other voltage

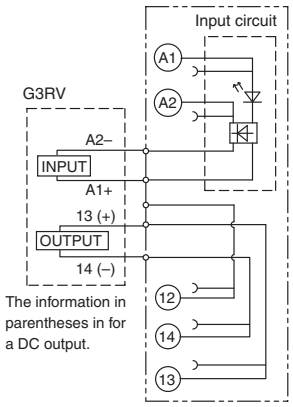

* : Diode bridge

: Light emitting diode

Screw terminal
G3RV-SR700

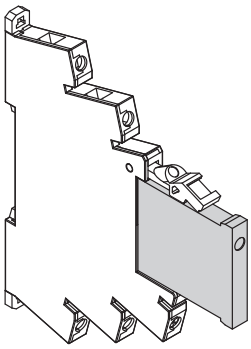

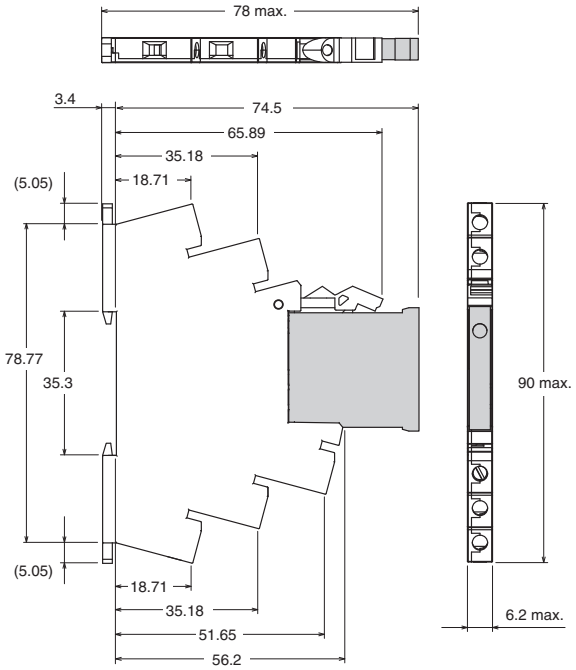

Terminal Arrangement/
Internal Connection Diagram
(TOP VIEW)

12 VDC

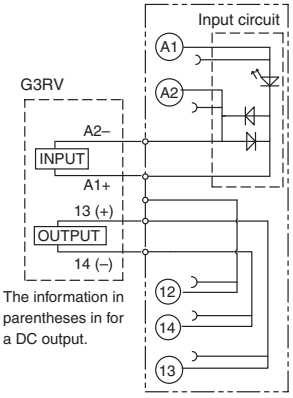

The information in parentheses in for a DC output.

24 VDC

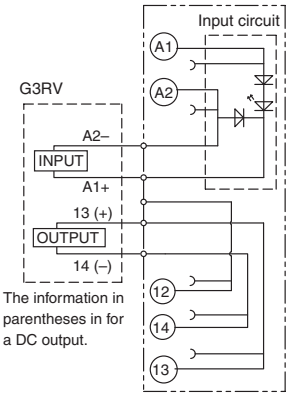

The information in parentheses in for a DC output.

Other voltage

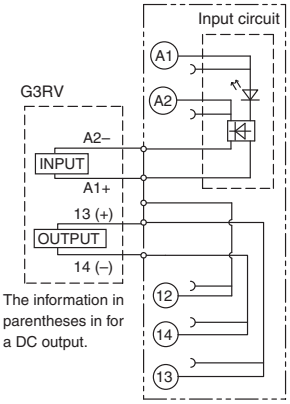

The information in parentheses in for a DC output.

* : Diode bridge

: Light emitting diode

Solid state relay for maintenance

G3RV-D03SL
G3RV-202S(L)



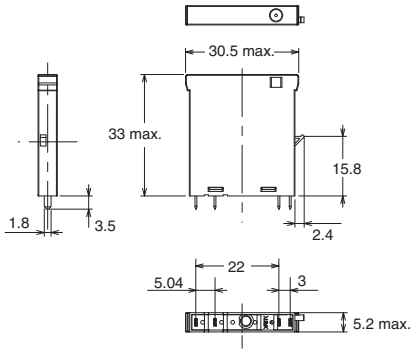

Terminal Arrangement/ Internal Connection Diagram (TOP VIEW)

G3RV-D03SL (input circuit)

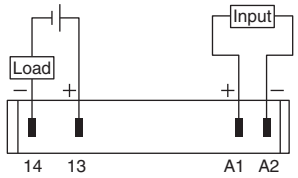

G3RV-202S(L) (input circuit)

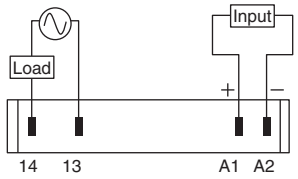

Safety Precautions

Be sure to read the *Safety Precautions for All Relays* in the website at the following URL: www.omron247.com.

Format of Warning Indications

⚠ WARNING	Indicates a potentially hazardous situation which, if not avoided, will result in minor or moderate injury, or may result in serious injury or death. Additionally, there may be significant property damage.
⚠ CAUTION	Indicates a potentially hazardous situation which, if not avoided, may result in minor or moderate injury or in property damage.
Precautions for Safe Use	Indicates supplementary comments on what to do or avoid doing, to use the product safety.
Precautions for Correct Use	Includes operating precautions to ensure that the product will operate properly and that performance and functions will not be adversely affected.

Meaning of Graphic Symbols for Ensuring Product Safety

	Indicates the possibility of electric shock under specific conditions.
	Used for general CAUTION, WARNING, or DANGER precautions for which there is no specified symbol. (This symbol is also used as the alerting symbol, but shall not be used in this meaning on the product.)
	Indicates the possibility of explosion or rupture under specific conditions.
	Indicates the possibility of injuries by high temperature under specific conditions.

⚠ WARNING

Ensure that the socket is not charged during wiring and maintenance. Not doing so may result in electric shock.



Do not touch the terminal section of the G2RV-SR or the surrounding area while the power is being supplied. Doing so may result in electric shock.



⚠ CAUTION

Minor electrical shock may occasionally occur.
Do not touch the G3RV terminal section (i.e., current carrying parts) while the power is being supplied.



The G3RV may rupture if short-circuit current flows. As protection against accidents due to short-circuiting, be sure to install protective devices, such as fuses and no-fuse breakers, on the power supply side.



Minor electrical shock may occasionally occur.
Do not touch the main circuit terminals on the G3RV immediately after the power supply has been turned OFF.
Shock may result due to the electrical charge stored in the built-in snubber circuit.
Note: G3RV-202S(L), G3RV-SR500/700-A(L) series models only



Minor burns may occasionally occur.
Do not touch the G3RV or the heat sink while the power is being supplied or immediately after the power supply has been turned OFF.
The G3RV becomes extremely hot.



Provide a space of at least 3 mm between the G2RV-SR and ground. Not doing so may result in a ground fault.



Precautions for Safe Use

Transport

- Do not use the product if it has been dropped on the ground. Dropping the product may adversely affect performance.
- Do not drop the product or subject it to abnormal vibration or shock during transportation or mounting. Doing so may result in deterioration of performance, malfunction, or failure.
- Do not transport the product without it being packaged. Doing so may result in damage, malfunction, or failure.
- Do not transport the G3RV under the following conditions. Doing so may result in damage, malfunction, or deterioration of performance characteristics.
  - High temperature, high humidity conditions
  - Conditions such as temperature change that causes rapid condensation
  - Condition where it is not packaged

Operating and Storage Environments

- Do not use or store the product in the following locations. Doing so may result in damage, malfunction, or deterioration of performance characteristics.
  - Do not store in locations subject to ambient storage temperatures outside the range –40 to 70°C (for G2RV) and outside the range –30 to 100°C (for G3RV).
  - Locations subject to relative humidity outside the range 5% to 85% (for G2RV) and outside the range 45% to 85% (for G3RV).
  - Locations subject to high temperature or high humidity.
  - Conditions such as temperature change that causes rapid condensation
  - Locations where corrosive gases or flammable gases are present
  - Location where rainwater or water droplets gets splashed
  - Location with splashes of water, oil, and chemicals, etc.
  - Locations with much dust, salt, and iron powder
  - Location with blockers
  - Where static electricity or noise occurs
  - Where strong electromagnetic field is generated
  - Where there is a risk of exposure to radioactivity
- Do not use or store Sockets in environments that contain silicone gas, sulfidizing gas (e.g., SO_2 or H_2S), or organic gas, or near materials that contain silicone. Doing so may cause the contacts to be unstable or to fail.

Handling <G3RV>

- Keep the G3RV well ventilated.
  There is a risk of short-circuiting or burning due to G3RV overheating.

Mounting

- Before you start wiring, please make sure that the socket is securely attached to the mounting rail. If the socket is unstable, it may come loose with a risk of injury towards the workers.
- Please insert the flat-blade screwdriver to the bottom of the hole. If you do not insert the flat-blade screwdriver correctly, the cable will not be connected correctly.
- When lubricant such as oil is attached to the tip of the driver, the driver will fall off, with a risk of injury towards the workers.

Usage

- Please select the load within the rated range. Doing so may result in damage, malfunction, or failure.
- Please use the power of the rated frequency. It may cause malfunction, failure, or risk of burnout.

<G3RV>

- Install G3RV according to instructions *Mounting* on page 23. If you install in the wrong direction, abnormal heat is generated, and may lead to short-circuiting or burning the output element.
- G3RV is an SSR that generates heat. Please observe the ambient temperature setting range of G3RV. If installing in an enclosed space, set a fan, and ventilate.
- When mounting G3RV to DIN rail, firmly fit it into the groove. If it is not properly installed, there is a risk of it falling.

Wiring

- For the current to be applied, make sure a wire size with margin is used. Otherwise, excessive heat generated by the wires may cause burning.
- Do not attempt to use the wire if the coat is torn. Not doing so may result in electric shock.
- Always turn OFF the power supply before performing wiring. Not doing so may cause electrical shock.

<G3RV>

- The wires of the socket for G3RV socket should not be passed through the same duct as that being connected to the high-voltage power supply. Otherwise, inductive noise may damage the G3RV or cause it to malfunction.

Push-In Plus Terminal Block

- Do not wire anything to the release holes.
- Do not tilt or twist a flat-blade screwdriver while it is inserted into a release hole on the terminal block. The terminal block may be damaged.
- Insert a flat-blade screwdriver into the release holes at an angle. The terminal block may be damaged if you insert the screwdriver straight in.
- Do not allow the flat-blade screwdriver to fall out while it is inserted into a release hole.
- Do not bend the wire past its natural bending radius or pull on it with excessive force. Doing so may cause the wire disconnection.
- Do not insert more than one wire into each terminal (insertion) hole.
- To prevent wiring materials from smoking or ignition, use the wiring materials given in the following table.

Recommended Wire	Stripping length	
	Ferrules When using terminal	Ferrules When not using terminal
0.5 to 1.5 mm²/AWG20 to AWG16	10 mm	8 mm

Note: Use Ferrules with UL certification (R/C).

Disposal

- Do not dispose of the product by burning.

Precautions for Correct Use

- Do not use or store the product in the following locations. Doing so may result in damage, malfunction, or deterioration of performance characteristics.
  - Where vibration or shock is directly transmitted to the body
  - Do not use the product where the socket could touch a solvent or alkaline agent.
- Do not insert short bar in the hole for wire or screw driver, it may cause the result of failure of pull out.
  If insert short bar in the hole for wire or screw driver and try to pull out, it may cause damage for short bar or socket.

Push-In Plus Terminal Block

1. Connecting Wires to the Push-In Plus Terminal Block

Part Names of the Terminal Block

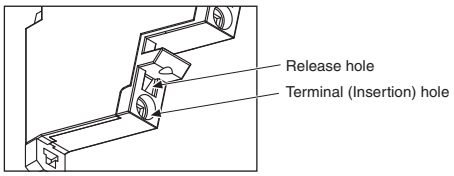

Connecting Wires with Ferrules

Insert the ferrule straight into the terminal block until the end strikes the terminal block.

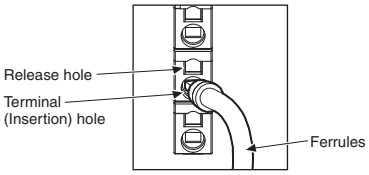

Connecting Stranded Wires

Use the following procedure to connect the wires to the terminal block.

(1) Hold a flat-blade screwdriver at an angle and insert it into the release hole.
The angle should be between 10°and15°. If the flat-blade screwdriver is inserted correctly, you will feel the spring in the release hole respond.
(2) With the flat-blade screwdriver still inserted into the release hole, insert the wire into the terminal hole until it strikes the terminal block.
(3) Remove the flat-blade screwdriver from the release hole.

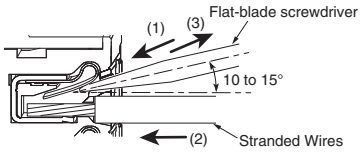

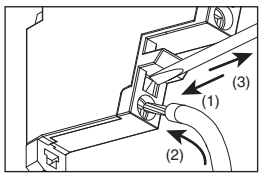

Checking Connections

- After insertion, pull gently on the wire to make sure that it will not come out (i.e., to confirm that it is held by the terminal block).
- To prevent short circuits, insert the stripped part of a stranded wire or the conductive part of a ferrule until it is hidden inside the terminal insertion hole. (See following diagram.)

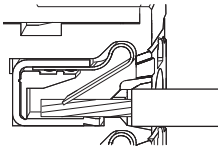

2. Removing Wires from the Push-In Plus Terminal Block

Use the following procedure to remove wires from the terminal block. The same method is used to remove stranded wires and ferrules.

(1) Hold a flat-blade screwdriver at an angle and insert it into the release hole.
(2) With the flat-blade screwdriver still inserted into the release hole, remove the wire from the terminal insertion hole.
(3) Remove the flat-blade screwdriver from the release hole.

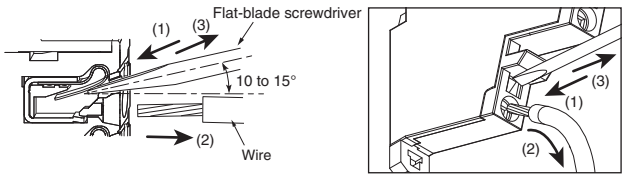

3. Recommended ferrules and tools

Recommended Ferrules

Applicable wire		Ferrules Conduct length (mm)	Recommended ferrules		
(mm^2)	(AWG)		Phoenix Contact product	Weidmuller product	Wago product
0.5	20	8	AI0.5-8	H0.5/14	FE-0.5-8N-WH
0.75	18	8	AI0.75-8	H0.75/14	FE-0.75-8N-GY
1	18	8	AI1-8	H1.0/14	FE-1.0-8N-RD
1.5	16	8	AI1.5-8	H1.5/14	FE-1.5-8N-BK
Recommended crimp tool			CRIMPFOX6 CRIMPFOX6T-F CRIMPFOX10S	PZ6 roto	Variocrimp4

∗1. Make sure that the outer diameter of the wire is smaller than the inner diameter of the insulating sleeve of the recommended ferrule.
∗2. Make sure that the ferrule processing dimensions conform to the following figure.

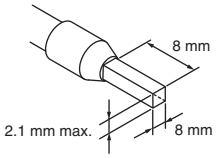

Recommended Flat-blade Screwdriver

Use a flat-blade screwdriver to connect and remove wires.
Use the following flat-blade screwdriver.
The following table is the manufacturer and format at the time in December 2015.

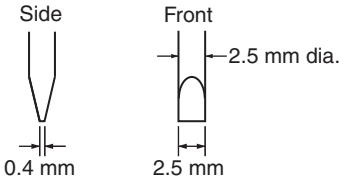

Model	Manufacturer
XW4Z-00B	Omron
ESD0.40×2.5	Wera
SZF 0.4×2.5	Phoenix Contact
0.4×2.5×75 302	Wiha
AEF.2.5×75	Facom
210-719	Wago
SDI 0.4×2.5×75	Weidmuller

Screw Terminal

• Screw terminal

Wired type	Applicable wire size	Stripping length
Stranded wires, without ferrule	0.5 to 1.5 mm^2	8 mm
Stranded wires, with ferrule and plastic collar	0.5 to 1.5 mm^2	8 mm
Stranded wires with ferrule, without plastic collar	0.5 to 1.5 mm^2	8 mm

• Tightening Torque

0.4 N · m

• Electric wiring

Use the electric wire of specified size as shown above. The stripped wire length is 8 mm.

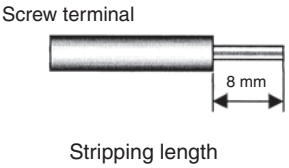

<G2RV>

Operating latching lever

When operating the latching lever for G2RV-SR701/501 series, use a 2.5 mm width flat-blade screwdriver.

• Applicable flat-blade screwdriver

Flat-blade screwdriver with parallel cutting edge: shaft diameter 2.5 mm (3.0 mm max.)

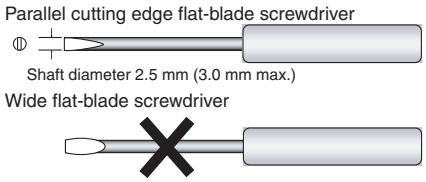

Driver with a thick shaft cannot be used.

- Always turn OFF the power supply before operating latching lever.
- Return to its original state after using the latching lever.
- Do not use the latching lever as a switch.
- Operation durability of the latching lever is 100 times or more.
- Do not keep the latching lever ON for a long period of time (24 hours or more) in order to maintain the operation check function.

Method of operation of the latching lever

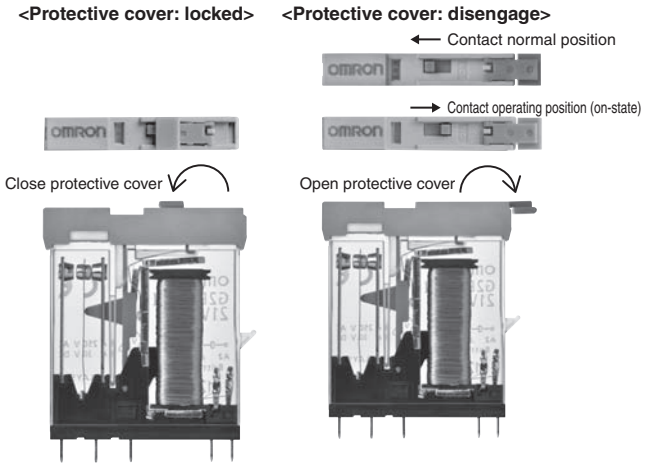

Keep the protective cover open when using the latching lever. Move until the latching lever clicks to the ON position (ON state). After using the latching lever, in order to prevent malfunction, return the switch to contact normal position (OFF state), and make sure the protective cover is firmly closed.

Using the latching lever

Example: check the operation of the relay and the sequence circuit

<G3RV>

- Since the G3RV uses electronic components, do not allow it to fall, vibrate, or apply shock that exceeds the criteria. Doing so may result in failure, malfunction, or deterioration of performance.
- Tighten screw terminal for G3RV with a torque of 0.4 N · m. It may cause short-circuit failure or burning.
- Please use the voltage and current suitable for the input and output terminal portion of G3RV. It may cause short-circuit failure or burning.

Mounting

<The SSR Mounting Pitch (Panel Mounting)>

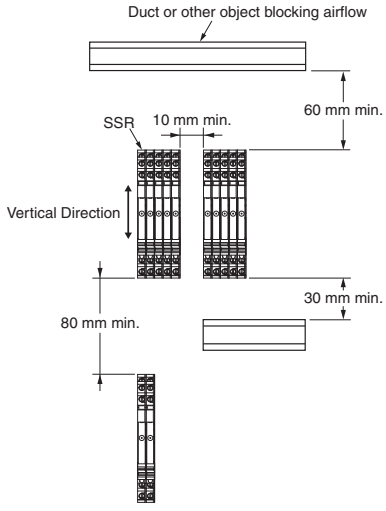

✻ When five or more are installed, install with 10 mm space between each.

<Relationship of SSR and duct (duct depth)>

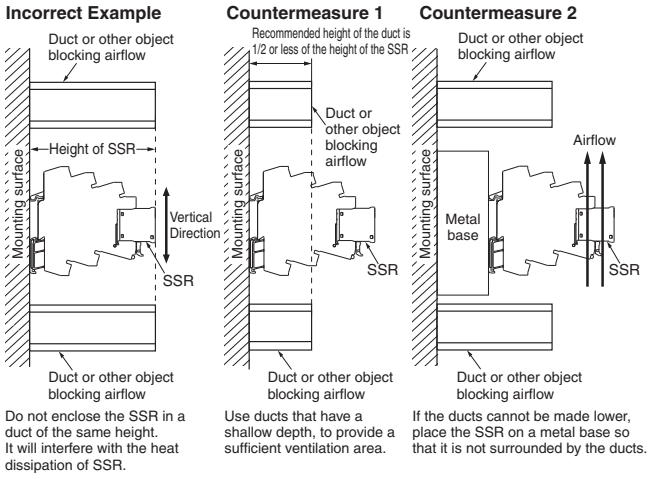

<Ventilation Outside the Control Panel>

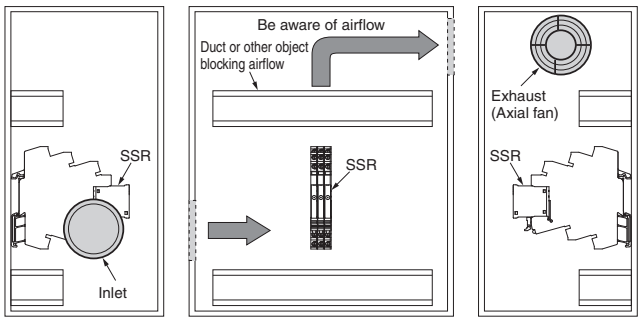

- If the air inlet or air outlet has a filter, clean the filter regularly to prevent it from clogging to ensure an efficient flow of air.
- Do not place objects that may obstruct the proper ventilation for outside or inside the inlet or exhaust port, and in the outside vicinity.
- A heat exchanger, if used, should be located in front of the G3RV to ensure the efficiency of the heat exchanger.
- Please observe the ambient temperature of G3RV. The rated current of the G3RV is measured at an ambient temperature of 25°C.
- The G3RV uses a semiconductor in the output element. This causes the temperature inside the control panel to increase due to heating resulting from the flow of electrical current through the load. The G3RV reliability can be increased by adding a ventilation fan to the control panel to dispel this heat, thus lowering the ambient temperature of the G3RV. (It suggests that life expectancy is doubled by each 10°C reduction in ambient temperature.)

EMI

The G3RV is a Class A product (for industrial environments). When used in a residential environment, it may cause radio interference. In such case, the user may be required to take appropriate measures.

For G2RV-SR/G3VR-SR
Common Accessories (order separately)

Ordering Information

Short Bars

Appearance	Pitch	No. of poles	Colors	Model *	Minimum order (Quantity)	Maximum energizing current
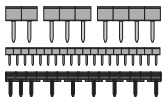	6.2 mm	2	Red (R), Blue (S), Yellow (Y)	**PYDN-6.2-020□**	10	32 A
		3		**PYDN-6.2-030□**		
		4		**PYDN-6.2-040□**		
		10		**PYDN-6.2-100□**		
		20		**PYDN-6.2-200□**		

Note: Use for wiring to the adjacent socket.
✻ Replace the box (□) in the model number with the code for the covering color. □ color selection: R = red, S = blue, Y = yellow

Labels

Appearance	Model	Minimum order
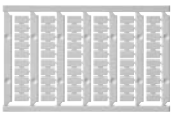	**XW5Z-P2.5LB2**	5 sheets (1 sheet/72 pieces)

Separate Plate

Appearance	Model
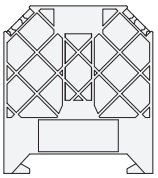	**XW5Z-EP12**

PLC interface unit

Appearance	I/O classification	Common process	Connection method	Model
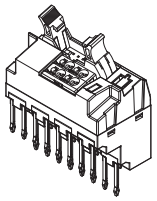	For input	PNP	Push-In	**P2RVC-8-I-5-1**
			Screw	**P2RVC-8-I-7-1**
		NPN	Push-In	**P2RVC-8-I-5**
	For output	PNP	Push-In	**P2RVC-8-O-5-1**
			Screw	**P2RVC-8-O-7-1**
		NPN	Push-In	**P2RVC-8-O-5**

Parts for DIN Track Mounting

Appearance	Type		Model	Minimum order (Quantity)
	DIN Tracks	1 m	**PFP-100N**	–
		0.5 m	**PFP-50N**	
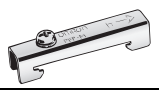	End Plate*		**PFP-M**	10
	Spacer		**PFP-S**	

* When mounting components to DIN rail, prevent sliding using end plates (Model PFP-M).
Refer to your OMRON website for details on PFP-□.

- **Applicable Cables**

Name		Appearance	Cable length L (mm)	Connecting Cables	Applicable Connectors
Cables with Loose Wires P2RV-A□C	8 I/O points	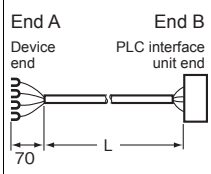	1,000	**P2RV-A100C**	Various devices
			2,000	**P2RV-A200C**	
			3,000	**P2RV-A300C**	
			5,000	**P2RV-A500C**	
Cables with Connectors (1:4) P2RV-4-□C	32 output points	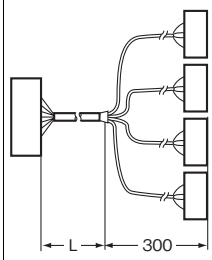	1,000	**P2RV-4-100C**	PLC I/O Units with MIL connectors (1:4) CJ1W-OD232/OD262, etc.
			2,000	**P2RV-4-200C**	
			3,000	**P2RV-4-300C**	
			5,000	**P2RV-4-500C**	
Cables with Connectors (1:4) P2RV-4-□IMC	32 input points	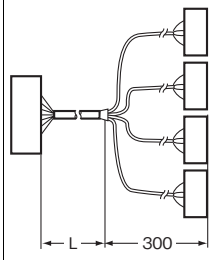	1,000	**P2RV-4-100IMC**	PLC I/O Units with MIL connectors (1:4) CJ1W-ID232/ID262, etc.
			2,000	**P2RV-4-200IMC**	
			3,000	**P2RV-4-300IMC**	
			5,000	**P2RV-4-500IMC**	
Cables with Connectors (1:4) P2RV-4-□IFC	32 input points	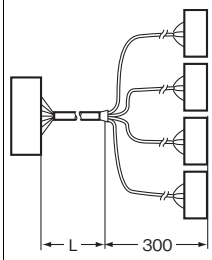	1,000	**P2RV-4-100IFC**	PLC I/O Units with Fujitsu connectors (1:4) CJ1W-ID231/ID261, etc.
			2,000	**P2RV-4-200IFC**	
			3,000	**P2RV-4-300IFC**	
			5,000	**P2RV-4-500IFC**	
Cables with Connectors (1:1) P2RV-A□C-OMR GRT1	8 output points 8 input points	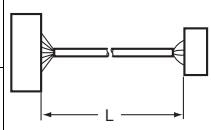	500	**P2RV-A050C-OMR GRT1**	Slice I/O Units (1:1) For inputs: GRT1-ID8-1 For outputs: GRT1-OD8-1
			1,000	**P2RV-A100C-OMR GRT1**	
			500	**P2RV-A050IC-OMR GRT1**	
			1,000	**P2RV-A100IC-OMR GRT1**	
Cables with Connectors (1:1) P2RV-A□C-OMR NX	8 output points 8 input points	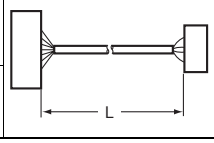	500	**P2RV-A050C-OMR NX**	PLC I/O Units with MIL connectors (1:1) For inputs: NX-ID4442 For outputs: NX-OD4256
			1,000	**P2RV-A100C-OMR NX**	
			500	**P2RV-A050IC-OMR NX**	
			1,000	**P2RV-A100IC-OMR NX**	

Name		Appearance	Cable length L (mm)	Connecting Cables	Applicable Connectors
Schneider Electric PLC Connecting Cables P2RV-□C-SCH-□	32 input points	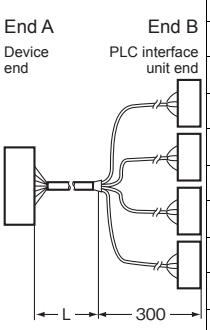	500	P2RV-050C-SCH-A	Schneider Electric PLCs with 32-point connectors (1:4) For inputs: 140 DDI 353 00 For outputs: 140 DDO 353 00
			1,000	P2RV-100C-SCH-A	
			2,000	P2RV-200C-SCH-A	
			3,000	P2RV-300C-SCH-A	
			5,000	P2RV-500C-SCH-A	
	32 output points		500	P2RV-050C-SCH-B	
			1,000	P2RV-100C-SCH-B	
			2,000	P2RV-200C-SCH-B	
			3,000	P2RV-300C-SCH-B	
			5,000	P2RV-500C-SCH-B	
	16 input points	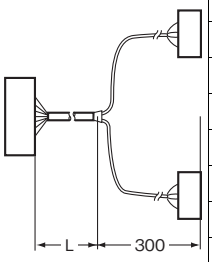	500	P2RV-050C-SCH-C	Schneider Electric PLCs with 16-point connectors (1:2) For inputs: BMX DDI 1602 For outputs: BMX DDO 1602
			1,000	P2RV-100C-SCH-C	
			2,000	P2RV-200C-SCH-C	
			3,000	P2RV-300C-SCH-C	
			5,000	P2RV-500C-SCH-C	
	16 output points		500	P2RV-050C-SCH-D	
			1,000	P2RV-100C-SCH-D	
			2,000	P2RV-200C-SCH-D	
			3,000	P2RV-300C-SCH-D	
			5,000	P2RV-500C-SCH-D	
Siemens PLC Connecting Cables P2RV-□C-SIM-□	32 input points	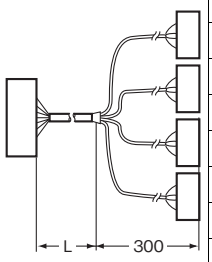	500	P2RV-050C-SIM-A	Siemens PLCs with 32-point connectors (1:4) For inputs: 6ES7 321-1BL00-0AA0 For outputs: 6ES7 322-1BL00-0AA0
			1,000	P2RV-100C-SIM-A	
			2,000	P2RV-200C-SIM-A	
			3,000	P2RV-300C-SIM-A	
			5,000	P2RV-500C-SIM-A	
	32 output points		500	P2RV-050C-SIM-B	
			1,000	P2RV-100C-SIM-B	
			2,000	P2RV-200C-SIM-B	
			3,000	P2RV-300C-SIM-B	
			5,000	P2RV-500C-SIM-B	
	16 input points	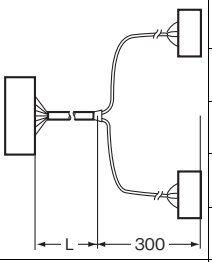	500	P2RV-050C-SIM-C	Siemens PLCs with 16-point connectors (1:2) For inputs: 6ES7 321-1BH02-0AA0
			1,000	P2RV-100C-SIM-C	
			2,000	P2RV-200C-SIM-C	
			3,000	P2RV-300C-SIM-C	
			5,000	P2RV-500C-SIM-C	
	32 input points	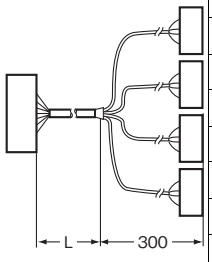	500	P2RV-050C-SIM-D	Siemens PLCs with 32-point connectors (1:4) For inputs: 6ES7 421-1BL-0AA0 For outputs: 6ES7 422-1BL-0AA0
			1,000	P2RV-100C-SIM-D	
			2,000	P2RV-200C-SIM-D	
			3,000	P2RV-300C-SIM-D	
			5,000	P2RV-500C-SIM-D	
	32 output points		500	P2RV-050C-SIM-E	
			1,000	P2RV-100C-SIM-E	
			2,000	P2RV-200C-SIM-E	
			3,000	P2RV-300C-SIM-E	
			5,000	P2RV-500C-SIM-E	

PLC interface unit

Ratings / characteristics

Rated voltage	30 VAC/DC
Rated current	0.5 A/poles, 2 A/unit
Ambient operating temperature	–40 to 55°C

Electrical schematic

Input

P2RVC-8-I-□-1 (PNP)

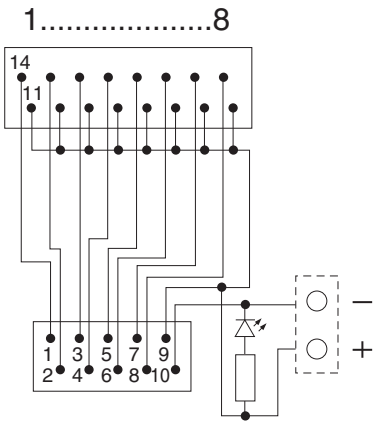

P2RVC-8-I-5 (NPN)

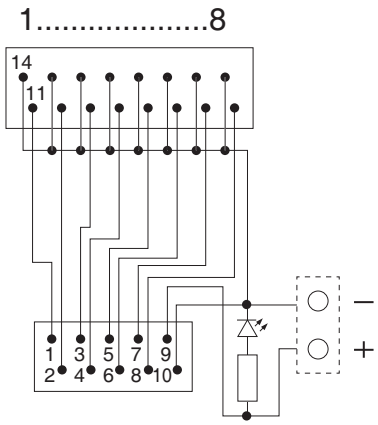

Output

P2RVC-8-O-□-1 (PNP)

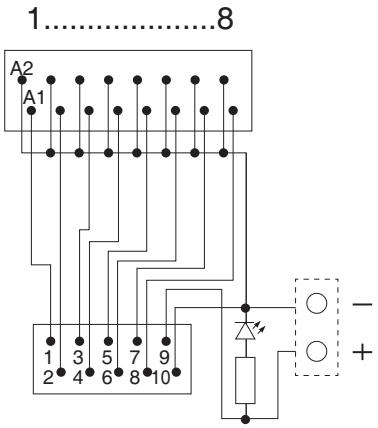

P2RVC-8-O-5 (NPN)

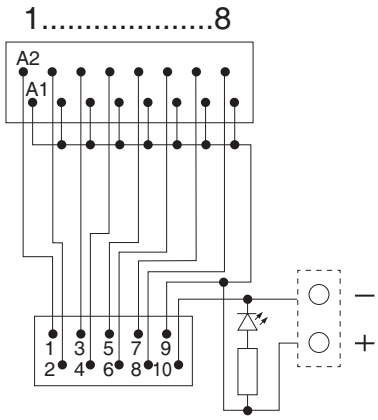

Dimensions

(unit: mm)

PLC interface unit

Push-IN

P2RVC-8-I-5(-1)
P2RVC-8-O-5(-1)

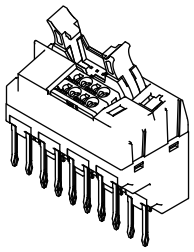

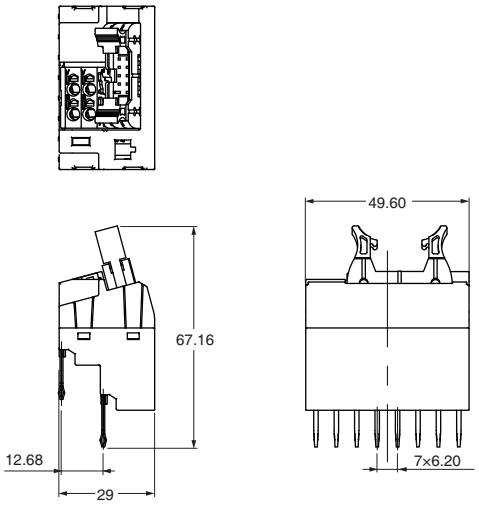

Screw

P2RVC-8-I-7-1
P2RVC-8-O-7-1

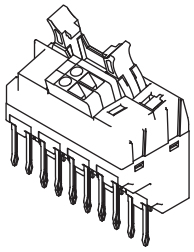

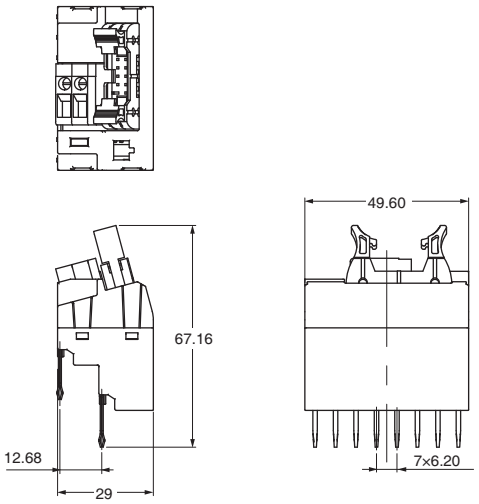

(Except for PLC interface unit)
Common Accessories

Dimensions

(unit: mm)

Short Bars

PYDN-6.2-□□ (6.2 mm)

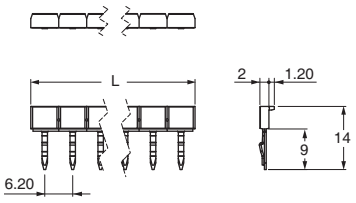

Pitch	No. of poles	L (Length)	Colors	Model ✻	Maximum carry current
6.2 mm	2	12.4	Red (R) Blue (S) Yellow (Y)	**PYDN-6.2-020□**	32 A
	3	18.6		**PYDN-6.2-030□**	
	4	24.8		**PYDN-6.2-040□**	
	10	62		**PYDN-6.2-100□**	
	20	124		**PYDN-6.2-200□**	

Note: Use the Short Bars for crossover wiring within one Socket or between Sockets.
✻ Replace the box (□) in the model number with the code for the covering color.

Separate Plate

XW5Z-EP12

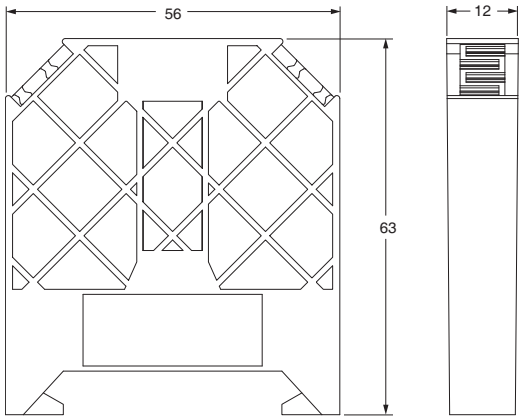

Parts for DIN Track Mounting

Refer to your OMRON website for details on the PFP-□.

Terms and Conditions of Sale

1. Offer; Acceptance. These terms and conditions (these "Terms") are deemed part of all quotes, agreements, purchase orders, acknowledgments, price lists, catalogs, manuals, brochures and other documents, whether electronic or in writing, relating to the sale of products or services (collectively, the "Products") by Omron Electronics LLC and its subsidiary companies ("Omron"). Omron objects to any terms or conditions proposed in Buyer's purchase order or other documents which are inconsistent with, or in addition to, these Terms.
2. Prices; Payment Terms. All prices stated are current, subject to change without notice by Omron. Omron reserves the right to increase or decrease prices on any unshipped portions of outstanding orders. Payments for Products are due net 30 days unless otherwise stated in the invoice.
3. Discounts. Cash discounts, if any, will apply only on the net amount of invoices sent to Buyer after deducting transportation charges, taxes and duties, and will be allowed only if (i) the invoice is paid according to Omron's payment terms and (ii) Buyer has no past due amounts.
4. Interest. Omron, at its option, may charge Buyer 1-1/2% interest per month or the maximum legal rate, whichever is less, on any balance not paid within the stated terms.
5. Orders. Omron will accept no order less than $200 net billing.
6. Governmental Approvals. Buyer shall be responsible for, and shall bear all costs involved in, obtaining any government approvals required for the importation or sale of the Products.
7. Taxes. All taxes, duties and other governmental charges (other than general real property and income taxes), including any interest or penalties thereon, imposed directly or indirectly on Omron or required to be collected directly or indirectly by Omron for the manufacture, production, sale, delivery, importation, consumption or use of the Products sold hereunder (including customs duties and sales, excise, use, turnover and license taxes) shall be charged to and remitted by Buyer to Omron.
8. Financial. If the financial position of Buyer at any time becomes unsatisfactory to Omron, Omron reserves the right to stop shipments or require satisfactory security or payment in advance. If Buyer fails to make payment or otherwise comply with these Terms or any related agreement, Omron may (without liability and in addition to other remedies) cancel any unshipped portion of Products sold hereunder and stop any Products in transit until Buyer pays all amounts, including amounts payable hereunder, whether or not then due, which are owing to it by Buyer. Buyer shall in any event remain liable for all unpaid accounts.
9. Cancellation; Etc. Orders are not subject to rescheduling or cancellation unless Buyer indemnifies Omron against all related costs or expenses.
10. Force Majeure. Omron shall not be liable for any delay or failure in delivery resulting from causes beyond its control, including earthquakes, fires, floods, strikes or other labor disputes, shortage of labor or materials, accidents to machinery, acts of sabotage, riots, delay in or lack of transportation or the requirements of any government authority.
11. Shipping; Delivery. Unless otherwise expressly agreed in writing by Omron:
    a. Shipments shall be by a carrier selected by Omron; Omron will not drop ship except in "break down" situations.
    b. Such carrier shall act as the agent of Buyer and delivery to such carrier shall constitute delivery to Buyer;
    c. All sales and shipments of Products shall be FOB shipping point (unless otherwise stated in writing by Omron), at which point title and risk of loss shall pass from Omron to Buyer; provided that Omron shall retain a security interest in the Products until the full purchase price is paid;
    d. Delivery and shipping dates are estimates only; and
    e. Omron will package Products as it deems proper for protection against normal handling and extra charges apply to special conditions.
12. Claims. Any claim by Buyer against Omron for shortage or damage to the Products occurring before delivery to the carrier must be presented in writing to Omron within 30 days of receipt of shipment and include the original transportation bill signed by the carrier noting that the carrier received the Products from Omron in the condition claimed.
13. Warranties. (a) Exclusive Warranty. Omron's exclusive warranty is that the Products will be free from defects in materials and workmanship for a period of twelve months from the date of sale by Omron (or such other period expressed in writing by Omron). Omron disclaims all other warranties, express or implied. (b) Limitations. OMRON MAKES NO WARRANTY OR REPRESENTATION, EXPRESS OR IMPLIED, ABOUT NON-INFRINGEMENT, MERCHANTABILITY OR FITNESS FOR A PARTICULAR PURPOSE OF THE PRODUCTS. BUYER ACKNOWLEDGES THAT IT ALONE HAS DETERMINED THAT THE PRODUCTS WILL SUITABLY MEET THE REQUIREMENTS OF THEIR INTENDED USE. Omron further disclaims all warranties and responsibility of any type for claims or expenses based on infringement by the Products or otherwise of any intellectual property right. (c) Buyer Remedy. Omron's sole obligation hereunder shall be, at Omron's election, to (i) replace (in the form originally shipped with Buyer responsible for labor charges for removal or replacement thereof) the non-complying Product, (ii) repair the non-complying Product, or (iii) repay or credit Buyer an amount equal to the purchase price of the non-complying Product; provided that in no event shall Omron be responsible for warranty, repair, indemnity or any other claims or expenses regarding the Products unless Omron's analysis confirms that the Products were properly handled, stored, installed and maintained and not subject to contamination, abuse, misuse or inappropriate modification. Return of any Products by Buyer must be approved in writing by Omron before shipment. Omron Companies shall not be liable for the suitability or unsuitability or the results from the use of Products in combination with any electrical or electronic components, circuits, system assemblies or any other materials or substances or environments. Any advice, recommendations or information given orally or in writing, are not to be construed as an amendment or addition to the above warranty. See http://www.omron247.com or contact your Omron representative for published information.
14. Limitation on Liability; Etc. OMRON COMPANIES SHALL NOT BE LIABLE FOR SPECIAL, INDIRECT, INCIDENTAL, OR CONSEQUENTIAL DAMAGES, LOSS OF PROFITS OR PRODUCTION OR COMMERCIAL LOSS IN ANY WAY CONNECTED WITH THE PRODUCTS, WHETHER SUCH CLAIM IS BASED IN CONTRACT, WARRANTY, NEGLIGENCE OR STRICT LIABILITY. Further, in no event shall liability of Omron Companies exceed the individual price of the Product on which liability is asserted.
15. Indemnities. Buyer shall indemnify and hold harmless Omron Companies and their employees from and against all liabilities, losses, claims, costs and expenses (including attorney's fees and expenses) related to any claim, investigation, litigation or proceeding (whether or not Omron is a party) which arises or is alleged to arise from Buyer's acts or omissions under these Terms or in any way with respect to the Products. Without limiting the foregoing, Buyer (at its own expense) shall indemnify and hold harmless Omron and defend or settle any action brought against such Companies to the extent based on a claim that any Product made to Buyer specifications infringed intellectual property rights of another party.
16. Property; Confidentiality. Any intellectual property in the Products is the exclusive property of Omron Companies and Buyer shall not attempt to duplicate it in any way without the written permission of Omron. Notwithstanding any charges to Buyer for engineering or tooling, all engineering and tooling shall remain the exclusive property of Omron. All information and materials supplied by Omron to Buyer relating to the Products are confidential and proprietary, and Buyer shall limit distribution thereof to its trusted employees and strictly prevent disclosure to any third party.
17. Export Controls. Buyer shall comply with all applicable laws, regulations and licenses regarding (i) export of products or information; (iii) sale of products to "forbidden" or other proscribed persons; and (ii) disclosure to non-citizens of regulated technology or information.
18. Miscellaneous. (a) Waiver. No failure or delay by Omron in exercising any right and no course of dealing between Buyer and Omron shall operate as a waiver of rights by Omron. (b) Assignment. Buyer may not assign its rights hereunder without Omron's written consent. (c) Law. These Terms are governed by the law of the jurisdiction of the home office of the Omron company from which Buyer is purchasing the Products (without regard to conflict of law principles). (d) Amendment. These Terms constitute the entire agreement between Buyer and Omron relating to the Products, and no provision may be changed or waived unless in writing signed by the parties. (e) Severability. If any provision hereof is rendered ineffective or invalid, such provision shall not invalidate any other provision. (f) Setoff. Buyer shall have no right to set off any amounts against the amount owing in respect of this invoice. (g) Definitions. As used herein, "including" means "including without limitation"; and "Omron Companies" (or similar words) mean Omron Corporation and any direct or indirect subsidiary or affiliate thereof.

Certain Precautions on Specifications and Use

1. Suitability of Use. Omron Companies shall not be responsible for conformity with any standards, codes or regulations which apply to the combination of the Product in the Buyer's application or use of the Product. At Buyer's request, Omron will provide applicable third party certification documents identifying ratings and limitations of use which apply to the Product. This information by itself is not sufficient for a complete determination of the suitability of the Product in combination with the end product, machine, system, or other application or use. Buyer shall be solely responsible for determining appropriateness of the particular Product with respect to Buyer's application, product or system. Buyer shall take application responsibility in all cases but the following is a non-exhaustive list of applications for which particular attention must be given:
   (i) Outdoor use, uses involving potential chemical contamination or electrical interference, or conditions or uses not described in this document.
   (ii) Use in consumer products or any use in significant quantities.
   (iii) Energy control systems, combustion systems, railroad systems, aviation systems, medical equipment, amusement machines, vehicles, safety equipment, and installations subject to separate industry or government regulations.
   (iv) Systems, machines and equipment that could present a risk to life or property. Please know and observe all prohibitions of use applicable to this Product.
   NEVER USE THE PRODUCT FOR AN APPLICATION INVOLVING SERIOUS RISK TO LIFE OR PROPERTY OR IN LARGE QUANTITIES WITHOUT ENSURING THAT THE SYSTEM AS A WHOLE HAS BEEN DESIGNED TO ADDRESS THE RISKS, AND THAT THE OMRON'S PRODUCT IS PROPERLY RATED AND INSTALLED FOR THE INTENDED USE WITHIN THE OVERALL EQUIPMENT OR SYSTEM.
2. Programmable Products. Omron Companies shall not be responsible for the user's programming of a programmable Product, or any consequence thereof.
3. Performance Data. Data presented in Omron Company websites, catalogs and other materials is provided as a guide for the user in determining suitability and does not constitute a warranty. It may represent the result of Omron's test conditions, and the user must correlate it to actual application requirements. Actual performance is subject to the Omron's Warranty and Limitations of Liability.
4. Change in Specifications. Product specifications and accessories may be changed at any time based on improvements and other reasons. It is our practice to change part numbers when published ratings or features are changed, or when significant construction changes are made. However, some specifications of the Product may be changed without any notice. When in doubt, special part numbers may be assigned to fix or establish key specifications for your application. Please consult with your Omron's representative at any time to confirm actual specifications of purchased Product.
5. Errors and Omissions. Information presented by Omron Companies has been checked and is believed to be accurate; however, no responsibility is assumed for clerical, typographical or proofreading errors or omissions.

OMRON AUTOMATION AMERICAS HEADQUARTERS • Chicago, IL USA • 847.843.7900 • 800.556.6766 • www.omron247.com

OMRON CANADA, INC. • HEAD OFFICE
Toronto, ON, Canada • 416.286.6465 • 866.986.6766 • www.omron247.com

OMRON ELECTRONICS DE MEXICO • HEAD OFFICE
México DF • 52.55.59.01.43.00 • 01-800-226-6766 • mela@omron.com

OMRON ELECTRONICS DE MEXICO • SALES OFFICE
Apodaca, N.L. • 52.81.11.56.99.20 • 01-800-226-6766 • mela@omron.com

OMRON ELETRÔNICA DO BRASIL LTDA • HEAD OFFICE
São Paulo, SP, Brasil • 55.11.2101.6300 • www.omron.com.br

OMRON ARGENTINA • SALES OFFICE
Cono Sur • 54.11.4783.5300

OMRON CHILE • SALES OFFICE
Santiago • 56.9.9917.3920

OTHER OMRON LATIN AMERICA SALES
54.11.4783.5300

OMRON EUROPE B.V. • Wegalaan 67-69, NL-2132 JD, Hoofddorp, The Netherlands. • +31 (0) 23 568 13 00 • www.industrial.omron.eu

Authorized Distributor:

Controllers & I/O
• Machine Automation Controllers (MAC) • Motion Controllers
• Programmable Logic Controllers (PLC) • Temperature Controllers • Remote I/O

Robotics
• Industrial Robots • Mobile Robots

Operator Interfaces
• Human Machine Interface (HMI)

Motion & Drives
• Machine Automation Controllers (MAC) • Motion Controllers • Servo Systems
• Frequency Inverters

Vision, Measurement & Identification
• Vision Sensors & Systems • Measurement Sensors • Auto Identification Systems

Sensing
• Photoelectric Sensors • Fiber-Optic Sensors • Proximity Sensors
• Rotary Encoders • Ultrasonic Sensors

Safety
• Safety Light Curtains • Safety Laser Scanners • Programmable Safety Systems
• Safety Mats and Edges • Safety Door Switches • Emergency Stop Devices
• Safety Switches & Operator Controls • Safety Monitoring/Force-guided Relays

Control Components
• Power Supplies • Timers • Counters • Programmable Relays
• Digital Panel Meters • Monitoring Products

Switches & Relays
• Limit Switches • Pushbutton Switches • Electromechanical Relays
• Solid State Relays

Software
• Programming & Configuration • Runtime

J285I-E-01 06/16 Note: Specifications are subject to change. © 2016 Omron. All Rights Reserved. Printed in U.S.A.

Printed on recycled paper.