OMRON

Motor Condition Monitoring Device
K6CM-CI

Quantifying the status of a three-phase induction motor.

- The “comprehensive current diagnosis” can monitor not only for motor problems, but also abnormal load-side conditions.
- Simply install a CT on the control panel enables monitoring.
- The software tool (set-up and simple monitoring tool) is also provided.
- K6CM-CI2M is newly added. This model is suitable for use in an excessive noise environment such as using an inverter. Supports Modbus TCP in addition to EtherNet/IP.



For the most recent information on models that have been certified for safety standards, refer to your OMRON website.

System Configuration

Basic Configuration

Comprehensive current diagnosis type (K6CM-CI)

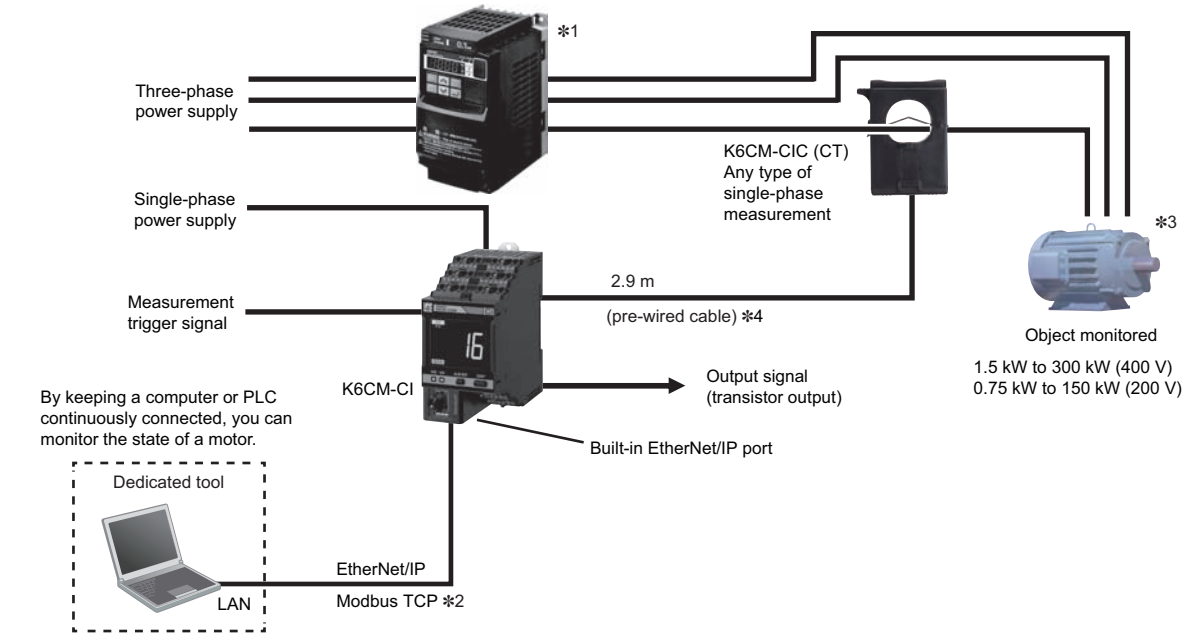

Note : 1. Even without a computer, the alarm bar of the main unit notifies you of changes of motor state.
2. The degradation level may appear differently depending on the failure condition of the motor or load, or depending on the installation condition.

Using a K6CM-CIM

∗1. When the motor is driven by an inverter, it may not be possible to monitor the motor or load abnormalities. Refer to the User's manual (N219) for details.
∗2. Modbus TCP is not supported.
∗4. The CT cable cannot be extended.

Using a K6CM-CI2M

∗1. In an environment where the motor is driven by an inverter, if the degradation level 1 is used as the measurement value, it may not be possible to monitor the motor or load abnormalities. Therefore, it is recommended to use the degradation level 2. Refer to the User's manual (N219) for details.
∗3. Since the frequency band of the harmonics of the drive frequency and the frequency band in which errors such as load imbalance and misalignment appear are the same frequency band for a 2-pole meter, sensitivity may be reduced with degradation level 2.
∗4. The CT cable cannot be extended.

Ordering Information

List of Models

Monitoring type	Degradation level/ Degradation level 1	Degradation level 2	Power supply voltage	Model
Comprehensive current diagnosis type	✓	✓	100 to 240 VAC	**K6CM-CI2MA-EIP**
	✓	✓	24 VAC/VDC	**K6CM-CI2MD-EIP**
	✓		100 to 240 VAC	**K6CM-CIMA-EIP**
	✓		24 VAC/VDC	**K6CM-CIMD-EIP**

Note: The K6CM-CIM measures the feature value of the degradation level, and the K6CM-C12M measures the feature values of degradation level 1 and degradation level 2. The degradation level of the K6CM-CIM is the same as degradation level 1.
For the differences of each, refer to the User's Manual (N219).

CT (Order separately)

Rated primary-side current	Applicable Relay	Model
5 A	K6CM-CI	**K6CM-CICB005**
25 A		**K6CM-CICB025**
100 A		**K6CM-CICB100**
200 A		**K6CM-CICB200**
400 A		**K6CM-CICB400**
600 A		**K6CM-CICB600**

Note: One sensor is combined with one main unit. A cable for connection is provided with the CT.
Select a CT that sets the current of the applicable motor within the measurement range.
To calculate the current, refer to *Comprehensive Current Diagnosis Type Technical Data (Reference)* on page 10.

EtherNet/IP communications cable recommended parts

Use a Category 5 or higher STP cable (shielded twisted pair cable).

Cable with Connectors

Item		Recommended manufacturer	Cable length (m)	Model
Wire Gauge and Number of Pairs: AWG26, 4-pair Cable Cable Sheath material: LSZH ✻2	Cable with Connectors on Both Ends (RJ45/RJ45) Standard RJ45 plug type ✻1 Cable color: Yellow ✻3 	OMRON	**0.3**	**XS6W-6LSZH8SS30CM-Y**
			0.5	**XS6W-6LSZH8SS50CM-Y**
			1	**XS6W-6LSZH8SS100CM-Y**
			2	**XS6W-6LSZH8SS200CM-Y**
			3	**XS6W-6LSZH8SS300CM-Y**
			5	**XS6W-6LSZH8SS500CM-Y**
Wire Gauge and Number of Pairs: AWG22, 2-pair Cable	Cable with Connectors on Both Ends (RJ45/RJ45) Rugged RJ45 plug type ✻1 Cable color: Light blue 	OMRON	**0.3**	**XS5W-T421-AMD-K**
			0.5	**XS5W-T421-BMD-K**
			1	**XS5W-T421-CMD-K**
			2	**XS5W-T421-DMD-K**
			5	**XS5W-T421-GMD-K**
			10	**XS5W-T421-JMD-K**

✻1. Cables with standard RJ45 plugs are available in the following lengths: 0.2 m, 0.3 m, 0.5 m, 1 m, 1.5 m, 2 m, 3 m, 5 m, 7.5 m, 10 m, 15 m, 20 m.
Cables with rugged RJ45 plugs are available in the following lengths: 0.3 m, 0.5 m, 1 m, 2 m, 3 m, 5 m, 10 m, 15 m.
For details, refer to the *Industrial Ethernet Connectors Catalog* (Cat. No. G019).
✻2. The lineup features Low Smoke Zero Halogen cables for in-cabinet use and PUR cables for out-of-cabinet use.
✻3. Cable colors are available in yellow, green, and blue. The last character of the model changes to "-G" or "-B".

Cable/Connector

Part name	Manufacturer	Model
Cable	Hitachi Metals, Ltd.	**NETSTAR-C5E SA 0.5 × 4P ✻**
RJ45 connector	Panduit Corporation	**MPS588-C ✻**

✻ It is recommended to use the cable and connector in combination described above.

Industrial switching hub (recommended parts)

Product name	Appearance	Specifications			Model
		Function	No. of ports	Failure detection function	
Industrial switching hub		Priority control (QoS): EtherNet/IP control data priority Failure detection: Broadcast storm / LSI failure detection 10/100BASE-TX, Auto-Negotiation	3	No	**W4S1-03B**
			5	No	**W4S1-05B**
			5	Yes	**W4S1-05C**

Ratings and Specifications

List of Models

Ratings

Power Supply	**Power supply voltage**		K6CM-□□MA: 100 to 240 VAC, 50/60 Hz K6CM-□□MD: 24 VAC, 50/60 Hz, 24 VDC
	Allowable operating voltage range		85% to 110% of power supply voltage
	Power supply frequency range		45 to 65 Hz
	Power consumption		24 VAC/24 VDC: 3.2 VA/1.7 W max. 100 to 240 VAC: 6.1 VA max. ✻1
Input	**Current, comprehensive current diagnosis (CT)**	**Rated input current**	5 A, 25 A, 100 A, 200 A, 400 A, 600 A
Applicable motor type			Three-phase induction motor (Rated voltage 480 VAC) ✻2
Outputs	**Output form**		Transistor output
	Output capacity		3-point
	Output rating		Rated voltage: 24 VDC Max. current: 50 mA, DC
Ambient operating temperature			-10 to +55°C (with no condensation or icing)
Storage temperature			-20 to +65°C (with no condensation or icing)
Ambient operating humidity			25% to 85% RH (with no condensation)
Storage humidity			25% to 85% RH (with no condensation)
Case color			Black
Case material			Polycarbonate UL94-V0
Altitude			2,000 m max.
Applicable wires			Stranded wires, solid wires, or ferrules
Applicable wire size			0.25 to 1.5 mm^2 (AWG24 to 16)
Wire insertion force			8 N max. (AWG20)
Screwdriver insertion force			15 N max.
Wire stripping length			8 mm
Recommended flat-blade screwdriver			XW4Z-00B (Omron)
Current capacity			10 A (per pole)
Number of insertions			50 times
Weight			Approx. 200 g
Mounting			Mounts to DIN Track screw mounting
Dimensions			45 (W) × 90 (H) × 90 (D) mm
Setting method			Communications settings from a dedicated tool via EtherNet/IP
Other functions			Display value selection, self-diagnosis error output, setting value initialization, operation integration
Accessories			Operation manual, CD-ROM (Motor condition monitoring Tool)

✻1. Value of the K6CM-C12M. On the K6CM-CIM, 3.1 VA or less/1.6 W or less with AC 24/DC 24, and 6.0 VA with AC 100 to 240 V.
✻2. Motors other than three-phase induction motors (synchronous motors, single phase motors, servo motors, and stepping motors) are excluded.

Characteristics

Measurement range		Current Rating 5 A: 1.00 to 5.00 A Rating 25 A: 5.0 to 25.0 A Rating 100 A: 20.0 to 100.0 A Rating 200 A: 40.0 to 200.0 A Rating 400 A: 80.0 to 400.0 A Rating 600 A: 120.0 to 600.0 A Rated frequency: 20 to 80 Hz Degradation level/degradation level 1, degradation level 2: 0 to 999 Recommended frequency: 20 to 80 Hz ✻1
Measurement absolute accuracy	**Current**	±1.0% FS±1 digit (at 10 to 30°C, CT variation is not included) ✻2
Sampling cycle		Degradation level/degradation level 1, degradation level 2, current: 5 s
Moving average frequency		1, 2, 4, 8, 16, 32 times
External trigger	**External contact input specification**	Short-circuit: Residual voltage 1.5 V max. Open: Leakage current 0.1 mA max.
	Current during short-circuiting	Approx. 7 mA
Transistor output		Contact configuration: NPN open collector Rated voltage: 24 VDC (maximum voltage: 26.4 VDC) Max. current: 50 mA, DC
Alarm	**Parameters that can be output**	Degradation level/degradation level 1, degradation level 2, current
	Expression method	Transistor output, alarm bar
	Setting value	Current Rating 5 A: 00.00 to 99.99 A Rating 25 A/100 A/ 200 A/400 A/600 A: 0.0 to 999.9 A Degradation level/degradation level 1, degradation level 2: 0 to 9999
	Hysteresis	10% width of setting value
	Reset method	Manual reset/automatic reset (switchable) ✻ Manual return method: Press the ALMRST button
LCD display		7-Segment digital display and single-shot display Font height 14 mm
Applicable standards	**Conforming standards**	EN61010-2-030 Installation environment: Pollution degree 2, overvoltage category II, measurement category II
	EMC	EN61326-1(EMI: Class A EMS: Industrial Location) Current ± 10% F.S.
	Safety standards	UL61010-2-030 (listing) Overvoltage category II Korean Radio Waves Act (Act 10564) RCM EAC
Insulation resistance		20 MΩ min. Between all external terminals and the case Between all power supply terminals and all other terminals Between all sensor connection terminals and trigger input terminal + output terminal + all EtherNet/IP ports
Dielectric strength		2,000 VAC for 1 minute Between all external terminals and the case Between all power supply terminals and all other terminals Between all sensor connection terminals and trigger input terminal + output terminal + all EtherNet/IP ports
Vibration resistance		Vibration frequency 10 to 55 Hz, slice amplitude 0.35 mm in each of X, Y, Z directions 5 minute × 10
Shock resistance		100 m/s^2, 3 times each in 6 directions along 3 axes
Degree of protection		IP20
LED display	**Alarm bar**	Red/Yellow/Green
	MS, NS ✻3	Red/Green
Ethernet communications ✻4	**Number of ports**	1
	Physical layer	Ethernet: Connector RJ45
	Type	100BASE-TX
	Transmission distance (Maximum cable length)	100 m (Between hub and node)
	Topology	Star type
	Protocol	EtherNet/IP Modbus TCP ✻5

✻1. When used at a frequency higher than 80 Hz, the tendency toward motor degradation is less noticeable.
✻2. For the frequency characteristics of the CT, refer to the technical data on page 10.
✻3. MS: Product status display, NS: Network status display.
✻4. A tag data link timeout may occur with products manufactured on or before April 30, 2019, over a network system including nodes set for multicast communications. Use the multicast blocking function of the switching hub to prevent multicast packets from reaching the K6CM.
✻5. K6CM-CI2M only.

CT
Ratings and Specifications

Item \ Model	K6CM-CICB005	K6CM-CICB025	K6CM-CICB100	K6CM-CICB200	K6CM-CICB400	K6CM-CICB600
Construction	Indoor split type					
Primary-side rated current	5 A	25 A	100 A	200 A	400 A	600 A
Measurement range ✻1	1 to 5 A	5 to 25 A	20 to 100 A	40 to 200 A	80 to 400 A	120 to 600 A
Rated voltage	480 VAC					
Secondary-side rated current	Dedicated current					
Secondary winding	3000 turns				6000 turns	9000 turns
Insulation resistance	Between output terminal and case: 50 MΩ min.					
Dielectric strength	Between output terminal and case: 2,000 VAC, 1 minute					
Protective element	7.5 V clamp element					
Permissible attachment/removal frequency	100 times					
Attachable wire diameter ✻2	7.9 mm dia. max.	9.5 mm dia. max.	14.5 mm dia. max.	24.0 mm dia. max.	35.5 mm dia. max.	
Operating temperature / humidity range	-20 to +60°C, 25 to 85% (with no condensation or icing)					
Storage temperature / humidity range	-30 to +65°C, 25 to 85% (with no condensation or icing)					
Supplied cable length	2.9 m (pre-wired cable)					
Supplied cable terminal / **Main unit side**	Ferrule terminal					
Supplied cable terminal / **CT side**	Round terminal					
Degree of protection	IP20					

✻1. Select a CT that brings the current of the applicable motor into the measurement range.
To calculate the current, refer to the technical data on page 10.
✻2. When using a flat wire, be sure to refer to the external dimensions drawing of the CT before selection on page 8.

Motor condition monitoring Tool (Software included with main unit)
Operating Environment

Element	Specification
Supported OS	Windows 7, Windows 8.1, Windows 10 (32 bit/64 bit) (Japanese/English)
.NET	.NET Framework 4 and .NET Framework 3.5
CPU	1 GHz or more, 32 bit or 64 bit processor
Memory	1 GB or more, or 2 GB or more (for 64 bit)
HDD	Available space of 16 GB or more, or 20 GB or more (for 64 bit)
Others	Since this software is provided on a CD-ROM, a CD-ROM reading device must be available. If data is to be collected, a LAN I/F must be available.

Functions/Specifications (For more details, refer to the catalog of each product.)

Item		Specification
Project	**Number of files that can be created**	No limit
Log file		CSV data format
Monitoring cycle		5 second to 366 days
Number that can be registered in one project	**Number of motors (device groups)**	10
	Number of devices per motor (device group)	3 **✻1**
Graphic display	**Type of graph**	Line graph
	Display period ✻2	1 hour, 1 day, 1 month, 1 year

✻1. One vibration and temperature type, one insulation resistance type, and one current comprehensive diagnosis type can be set for one motor.
✻2. In the software tool version 1.2.0.0 and earlier, the graph display period can be set by selecting the tabs (1 hour, 1 day, 3 months, 6 months, 1 year, 2 years, 5 years, 10 years, 20 years).
In the software tool version 1.2.0.0 and later, you can move the graph in the time axis direction using the graph time axis movement.

Connection Diagram

Terminal Diagram (Main Unit)

K6CM- CI M A -EIP
(1)

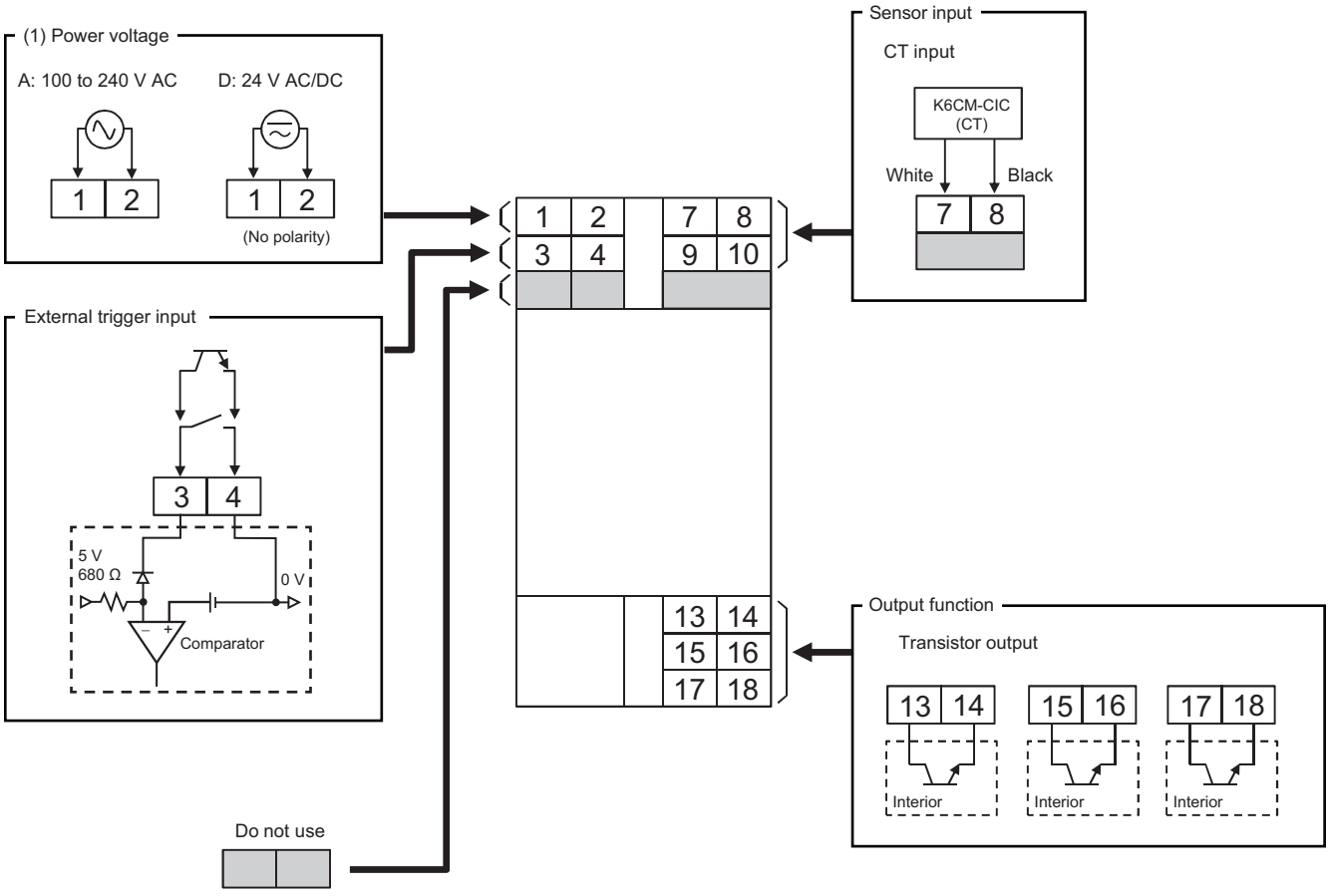

Nomenclature

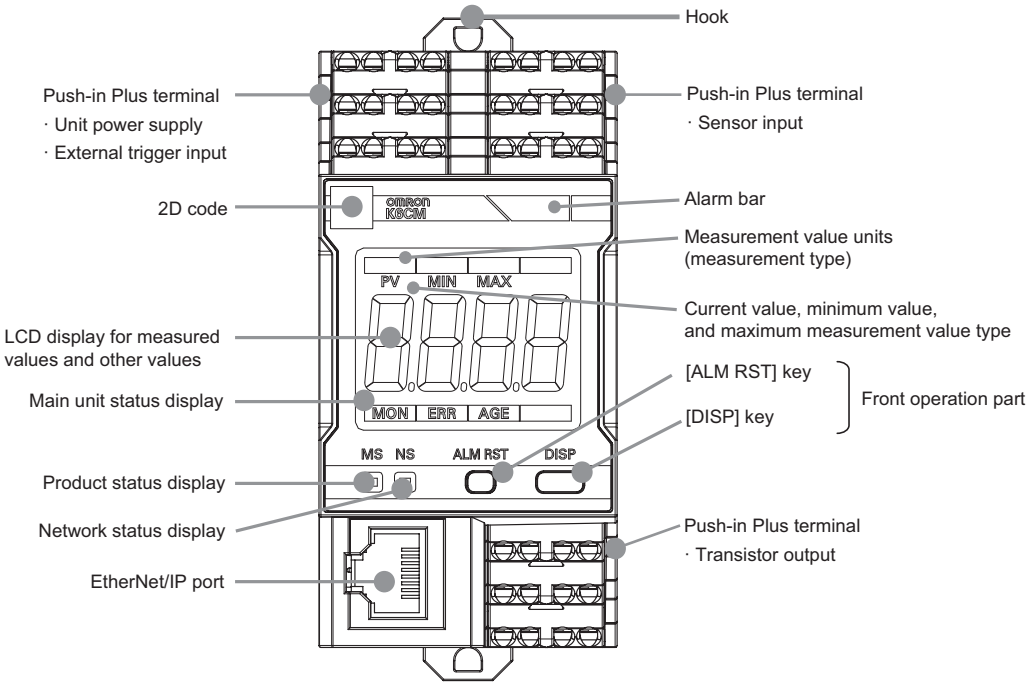

Name		Meaning	
Alarm bar		A bar on which the color of the emitted light changes according to the alarm status.	It is indicated in the following colors during measurement/monitoring. Green: Alarm status (normal) Yellow: Alarm status (Warning) Red: Alarm status (Critical) The alarm bar is lit out in each of the following states: When the power is OFF, when measurement is not being performed, and when a self-diagnosis error has occurred, etc.
Measurement type		Indicates the type of the measured value being displayed. The type can be switched each time the [DISP] key is pressed on the front operation part.	K6CM-CIMA-EIP/K6CM-CIMD-EIP "Cim": Degradation level, "A": Current K6CM-CI2MA-EIP/K6CM-CI2MD-EIP "Ci1": Degradation level 1, "Ci2": Degradation level2, "A": Current
Front operation part	[ALM RST] key	Releases the latched alarm state.	The main use of this key is to release the latched and fixed alarm state after returning from the fault state to the normal state.
	[DISP] key	Switches the type of the measured value being displayed. You can switch between display-fixed mode and display auto switching mode by long-pressing for 3 seconds. ✻1	
	Others	If two keys are simultaneously pressed and held for 5 seconds or longer, all settings of the main unit are reset to factory defaults.	
Main unit status display		The status of the main unit is indicated by lighting of the LCD characters.	"MON": Measurement / monitoring is being performed "ERR": A self-diagnosis error has occurred "AGE": Running Time notification (it is recommended to replace the product main unit)
Transistor output	13-14	Output of the alarm status (Warning). Can be set to Normally Closed or Normally Open.	When measurement/monitoring is in progress, and the output method is Normally Closed ON = Comprehensive alarm: Normal / OFF = Comprehensive alarm: Warning or Critical and the output method is Normally Open OFF = Comprehensive alarm: Normal / ON = Comprehensive alarm: Warning or Critical
	15-16	Output of the alarm status (Critical). Can be set to Normally Closed or Normally Open.	When measurement/monitoring is in progress, and the output method is Normally Closed ON = Comprehensive alarm: Warning or Normal / OFF = Comprehensive alarm: Critical and the output method is Normally Open OFF = Comprehensive alarm: Warning or Normal / ON = Comprehensive alarm: Critical
	17-18	Self-diagnosis error output.	OFF: A self-diagnosis error has occurred ON: Other than the above
External trigger input	3-4	Input of the external contact signal to control measurement timing.	You can use "Trigger Type" to specify whether measurement/monitoring continue for a set time after starting by the rise or fall of the external contact, or are executed while the external contact is ON. You can also specify settings to enable selection of a trigger mode other than external trigger. ✻2

Note: Warning: Indicates that it is time for maintenance.
Critical: Indicates that it is time for replacement.

✻1. K6CM-CI2M only.

✻2. Trigger modes other than external trigger

Always: Trigger is not used. Measurement/monitoring are performed continuously after the power of the K6CM unit is turned on.

Internal trigger: Measurement/monitoring starts based on the relation between the measured value and set value (trigger level).
You can use "Trigger Type" to specify whether measurement/monitoring start and continue for a set time when the measured value is over, or under, the set value (trigger level), or are executed while the measured value exceeds the set value (trigger level).

Also, the external trigger function can be used only when the insulation resistance type is EIP CPU version 1.1 or higher.

K6CM-CI

Dimensions

(Unit: mm)

List of Models

K6CM-CI



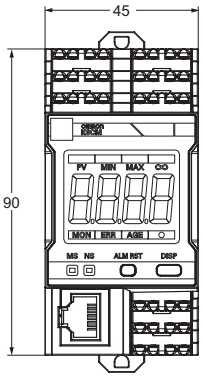

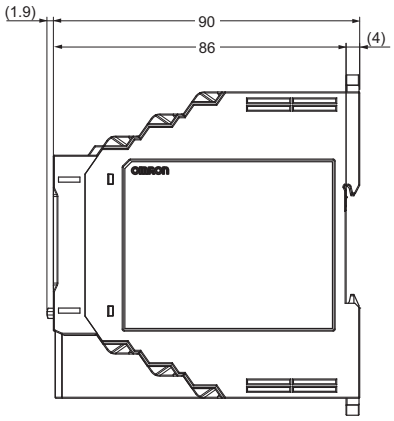

CT

K6CM-CICB005



CT Through-hole Dimensions

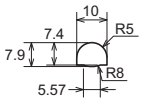

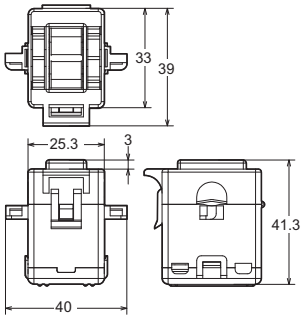

K6CM-CICB025



CT Through-hole Dimensions

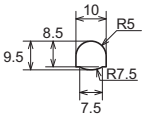

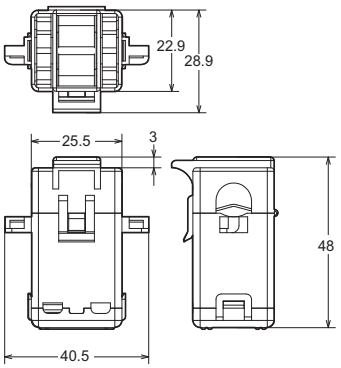

K6CM-CICB100



CT Through-hole Dimensions

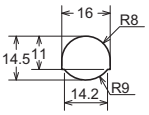

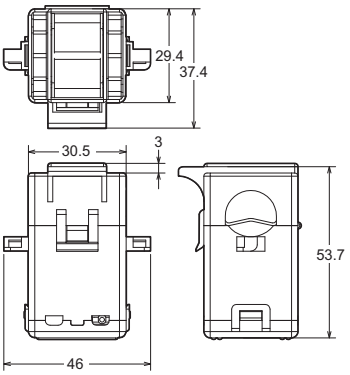

K6CM-CICB200



CT Through-hole Dimensions

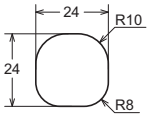

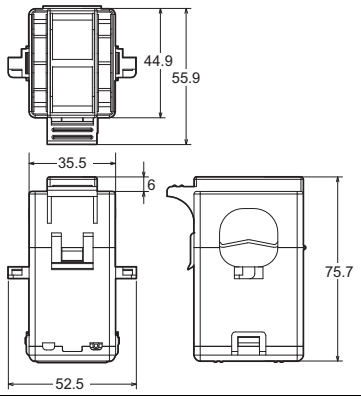

K6CM-CICB400
K6CM-CICB600



CT Through-hole Dimensions

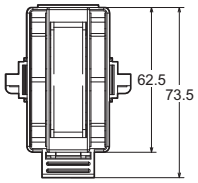

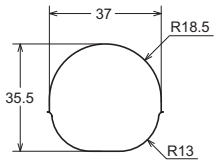

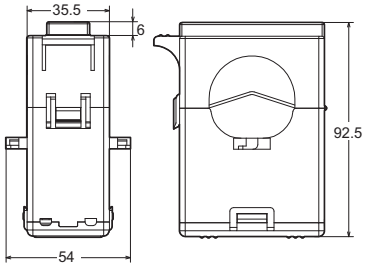

Cable supplied with CT

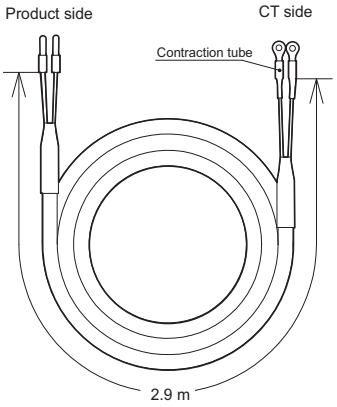

The cable supplied with the CT is shipped in the connected state.

Comprehensive Current Diagnosis Type Technical Data (Reference)

Use one CT per motor to detect current flowing into the motor. Select a CT that matches the motor capacity.

CT type	Measurement range	Maximum measurement range	Applicable motor (200 VAC)	Applicable motor (400 VAC)
K6CM-CICB005	1.00 A to 5.00 A	1.00 A to 5.25 A	0.75 kW	1.5 kW to 2.2 kW
K6CM-CICB025	5.00 A to 25.00 A	5.00 A to 26.25 A	1.5 kW to 5.5 kW	3.7 kW to 11 kW
K6CM-CICB100	20 A to 100 A	20 A to 105 A	7.5 kW to 22 kW	15 kW to 45 kW
K6CM-CICB200	40 A to 200 A	40 A to 210 A	30 kW to 45 kW	55 kW to 90 kW
K6CM-CICB400	80 A to 400 A	80 A to 420 A	55 kW to 90 kW	110 kW to 200 kW
K6CM-CICB600	120 A to 600 A	120 A to 630 A	110 kW to 150 kW	250 kW to 300 kW

Note: At no load, the motor current is at approximately half rated load.
Select a CT that can cover the range of 50% to 100% of rated current.

Use the following expression when calculating the current value from the motor capacitance.

$$\text{Current value of motor (A)} = \frac{\text{Motor capacitance (kW)} \times 1000}{\text{Motor voltage (V)} \times \sqrt{3} \times \text{Power factor (0.9)} \times \text{Efficiency (0.8)}}$$

(Example) When a 5.5-kW motor is used at 200 V

$$\text{Current value of motor} = \frac{5.5 \times 1000}{200 \times \sqrt{3} \times 0.9 \times 0.8} = 22 \text{ A}$$

Therefore, the CT K6CM-CICB025 in which 22 A is within the measurement range is selected.
The measurement range is within 20 and 100 A even in the case of K6CM-CICB100, which means that 22 A is within the range and this model can also be used. However, during selection, priority must be given to a CT having a small rated current value in order to realize more accurate measurement.

Note: In the expression shown above, general values must be used for the power factor and efficiency, and the load factor must be 100%. However, depending on the actual operating environment, the actual current value and measured value may be different. If the CT is used at a current value that is below the lower-limit value of the measurement range of the CT, the measurement error of the degradation level will increase. Therefore, if possible, measure the current during a steady-state operation with a clamp meter, etc., and select a CT corresponding to the current value.

List of Parameters

Setting values

Parameter	Content
Degradation level alarm threshold value (Critical and Warning)	0 to 9999
Current alarm threshold value (Critical and Warning)	CT rating 5 A: 00.00 to 99.99 A CT rating 25 A/100 A/200 A/400 A/600 A: 0.0 to 999.9 A
Main unit IP address	Sets the IP address of the main unit. The default value is “192.168.250.10” (common to all models)
Software reset	Restarts the K6CM. Used to enable the settings after changing the setting values. 0 → 1: Execute
MAX/MIN reset	Initializes the MAX/MIN value. 0 → 1: Execute
Display value type	Sets which measurement value to display in the 7-segment display at the front of the main unit. 0: PV (Present Value), 1: MIN, 2: MAX
Trigger mode ✻**1**	Sets the trigger mode. 0: At all times, 1: External trigger, 2: Internal trigger
Trigger type	Sets Rise, Fall, or Level in the case of an internal trigger or external trigger. 0: Rise, 1: Fall, 2: Level
Trigger level	Sets the trigger level when “Internal trigger” and the trigger type “Level” have been selected.
Monitoring time	Sets the time for continuing measurement or monitoring in the case of an internal trigger or external trigger, when the trigger type is either Rise or Fall. Setting value: 0.1 to 600.0 s
Alarm latch	Sets whether to enable or disable the alarm latch function. 0: Disable (no latch), 1: Enable (latched)
Use Running Time	Sets whether or not to use the main unit residual amount function. 0: OFF (Do not use), 1: ON (Use)
Moving average times	Performs the averaging process for the past n-times of data including the sampling data of that time, each time sampling of the measurement value is performed. 0: OFF, 1: 2 times, 2: 4 times, 3: 8 times, 4: 16 times, 5: 32 times
Current range	Selects the connected CT. 0: 5 A, 1: 25 A, 2: 100 A, 3: 200 A, 4: 400 A, 5: 600 A
Transistor output method ✻**2**	0: Normally Closed/1: Normally Open
Monitoring delay time ✻**3**	Set the delay time from the trigger input to the start of measurement. Setting value: 0.0 to 600.0 seconds.

✻**1.** The external trigger function can be used only when the insulation resistance type is EIP CPU version 1.1 or higher.
✻**2.** Can be used only with EIP CPU version 1.1 or higher.
✻**3.** The K6CM-CIM does not have monitoring delay time.

Measured values / Status data

Parameter	Content
Degradation level (Present value, MIN, MAX)	Degradation level of the motor calculated by measuring the current including the high-frequency component. 0 to 999
Current (Present value, MIN, MAX)	10 to 100% of the rated value
Degradation level status	Bit 00: Present value measurement status Bit 01: Present value input error Bit 04: MAX value measurement status Bit 05: MAX value input error Bit 08: MIN value measurement status Bit 09: MIN value input error Bit 12: Individual alarm threshold value (Warning) setting Bit 13: Individual alarm threshold value (Critical) setting
Current value status	
Measurement CPU version	Measurement unit version
Main CPU version	Main unit version
EIP CPU version	EtherNet/IP unit version
Measurement status	1: Measurement/monitoring in progress, 0: Measurement/monitoring stopped
Running time status	The product of the operation time and internal temperature is integrated, and ON is set if it reaches the design life. 1: Reached (Operation integration has reached 100%) 0: Not reached (Operation integration has not reached 100%)
Trigger input	Status of external trigger input. 1: ON, 0: OFF
TR1 (Transistor 1 output status)	Status of transistor 1. 1: ON, 0: OFF
TR2 (Transistor 2 output status)	Status of transistor 2. 1: ON, 0: OFF
TR3 (Transistor 3 output status)	Status of transistor 3. 1: ON, 0: OFF
Running time	Coefficient showing the extent of life of the main unit based on the product of the operation time and internal temperature. Incremented in units of 10% starting from 0%. 0000 hex to 0064 hex (0 to 100)
Trigger frequency	Total integrated number of external triggers and internal triggers. Incremented by 1 after every 100 times. 0 to 65535
Threshold value setting of integrated alarm (Warning)	State when the measurement value is “Warning”.
Threshold value setting of integrated alarm (Critical)	State when the measurement value is “Critical”.
Degradation level alarm (Critical and Warning)	ON, OFF
Current alarm (Critical and Warning)	ON, OFF

Motor Condition Monitoring Device

K6CM-VB

Quantifying the status of a three-phase induction motor.

- Bearing failures can be detected quickly.
- Using manual allows you to set the default values for the alarm threshold.
- An integrated sensor can measure vibration and temperature simultaneously.
- The software tool (set-up and simple monitoring tool) is also provided.
- Supports Modbus TCP in addition to EtherNet/IP.



For the most recent information on models that have been certified for safety standards, refer to your OMRON website.

System Configuration

Basic Configuration

Vibration & temperature type (K6CM-VB)

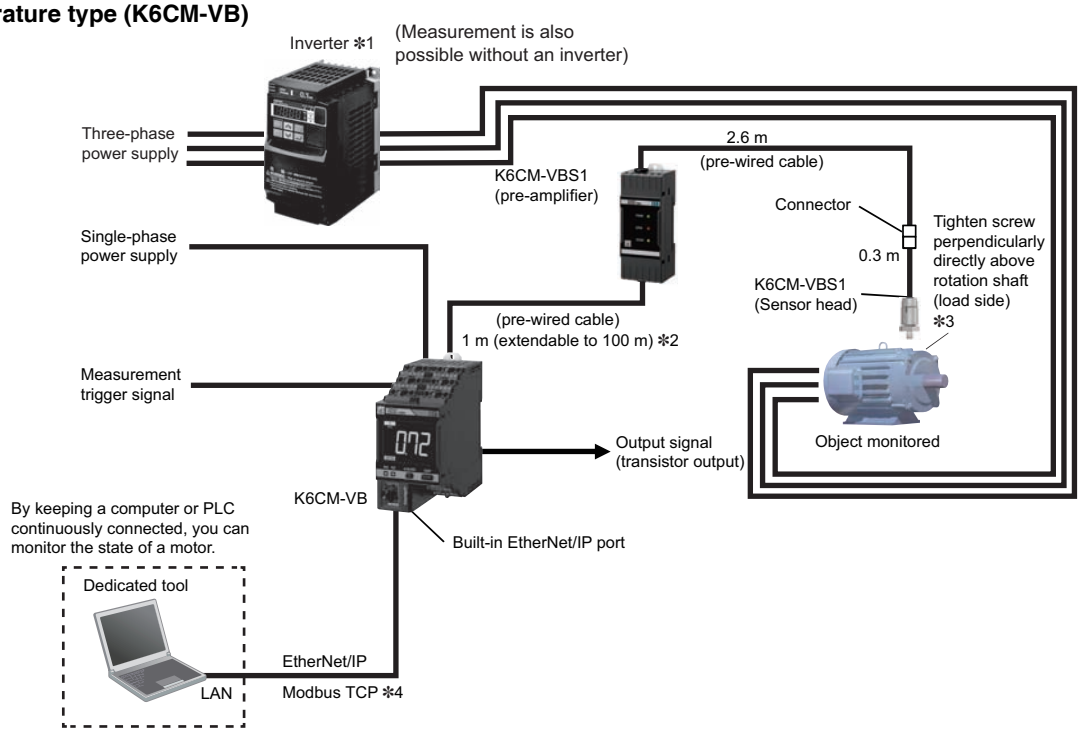

Note: Even without a computer, the alarm bar of the main unit notifies you of changes of motor state.

✻1. When you use an inverter to drive the motor, you may not be able to check the degradation tendency of the motor. In the conditions below, acceleration fluctuations tend to occur more frequently.
- The frequency is stable at an inverter drive frequency of 50 Hz or higher.
- The inverter carrier frequency is stable at 12.5 KHz or higher.

Test in the actual installation environment before use.

✻2. For extension cable, use shielded twisted pair cable with wire gauges of AWG24 to 16.

✻3. When using adhesive attachment, sensor head can be attached with adhesive attachment.

✻4. Can be used only with EIP CPU version 1.2 or higher.

Ordering Information

List of Models

Monitoring type	Power supply voltage	Model
Vibration & temperature type	100 to 240 VAC	**K6CM-VBMA-EIP**
	24 VAC/VDC	**K6CM-VBMD-EIP**

Input part

Vibration & temperature sensor (Order separately)

Appearance (pre-amplifier)	Appearance (sensor head)	Attachment part	Applicable Relay	Model
		M6 screw	K6CM-VB	**K6CM-VBS1**

Note: One sensor is combined with one main unit.
The vibration and temperature sensor consists of a sensor head and a pre-amplifier.
A magnet is provided for the easy attachment of the vibration and temperature sensor.
Use to determine the position to be measured. Note that measurement accuracy is not guaranteed in the case of magnet mounting.

Vibration and temperature sensor Adhesive attachment (option)

Appearance	Model
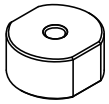	**K6CM-VBSAT1**

EtherNet/IP communications cable recommended parts

Use a Category 5 or higher STP cable (shielded twisted pair cable).

Cable with Connectors

Item		Recommended manufacturer	Cable length (m)	Model
Wire Gauge and Number of Pairs: AWG26, 4-pair Cable Cable Sheath material: LSZH ✻2	Cable with Connectors on Both Ends (RJ45/RJ45) Standard RJ45 plug type ✻1 Cable color: Yellow ✻3 	OMRON	0.3	XS6W-6LSZH8SS30CM-Y
			0.5	XS6W-6LSZH8SS50CM-Y
			1	XS6W-6LSZH8SS100CM-Y
			2	XS6W-6LSZH8SS200CM-Y
			3	XS6W-6LSZH8SS300CM-Y
			5	XS6W-6LSZH8SS500CM-Y
Wire Gauge and Number of Pairs: AWG22, 2-pair Cable	Cable with Connectors on Both Ends (RJ45/RJ45) Rugged RJ45 plug type ✻1 Cable color: Light blue 	OMRON	0.3	XS5W-T421-AMD-K
			0.5	XS5W-T421-BMD-K
			1	XS5W-T421-CMD-K
			2	XS5W-T421-DMD-K
			5	XS5W-T421-GMD-K
			10	XS5W-T421-JMD-K

✻1. Cables with standard RJ45 plugs are available in the following lengths: 0.2 m, 0.3 m, 0.5 m, 1 m, 1.5 m, 2 m, 3 m, 5 m, 7.5 m, 10 m, 15 m, 20 m. Cables with rugged RJ45 plugs are available in the following lengths: 0.3 m, 0.5 m, 1 m, 2 m, 3 m, 5 m, 10 m, 15 m. For details, refer to the *Industrial Ethernet Connectors Catalog* (Cat. No. G019).
✻2. The lineup features Low Smoke Zero Halogen cables for in-cabinet use and PUR cables for out-of-cabinet use.
✻3. Cable colors are available in yellow, green, and blue. The last character of the model changes to "-G" or "-B".

Cable/Connector

Part name	Manufacturer	Model
Cable	Hitachi Metals, Ltd.	**NETSTAR-C5E SA 0.5 × 4P ✻**
RJ45 connector	Panduit Corporation	**MPS588-C ✻**

✻ It is recommended to use the cable and connector in combination described above.

Industrial switching hub (recommended parts)

Product name	Appearance	Specifications			Model
		Function	No. of ports	Failure detection function	
Industrial switching hub		Priority control (QoS): EtherNet/IP control data priority Failure detection: Broadcast storm / LSI failure detection 10/100BASE-TX, Auto-Negotiation	3	No	**W4S1-03B**
			5	No	**W4S1-05B**
			5	Yes	**W4S1-05C**

K6CM-VB

Ratings and Specifications

List of Models

Ratings

Power Supply	**Power supply voltage**		K6CM-□□MA: 100 to 240 VAC, 50/60 Hz K6CM-□□MD: 24 VAC, 50/60 Hz, 24 VDC
	Allowable operating voltage range		85% to 110% of power supply voltage
	Power supply frequency range		45 to 65 Hz
	Power consumption		24 VAC/24 VDC: 3.8 VA/2.1 W max. 100 to 240 VAC: 7.1 VA max.
Input	**Vibrations (vibration sensor)**	**Detection frequency**	10 Hz to 10 kHz
		Max. operating acceleration	10 G
Applicable motor type			Three-phase induction motor (Rated voltage 600 V or less) ✻
Outputs	**Output form**		Transistor output
	Output capacity		3-point
	Output rating		Rated voltage: 24 VDC Max. current: 50 mA, DC
Ambient operating temperature			-10 to +55°C (with no condensation or icing)
Storage temperature			-20 to +65°C (with no condensation or icing)
Ambient operating humidity			25% to 85% RH (with no condensation)
Storage humidity			25% to 85% RH (with no condensation)
Case color			Black
Case material			Polycarbonate UL94-V0
Altitude			2,000 m max.
Applicable wires			Stranded wires, solid wires, or ferrules
Applicable wire size			0.25 to 1.5 mm^2 (AWG24 to 16)
Wire insertion force			8 N max. (AWG20)
Screwdriver insertion force			15 N max.
Wire stripping length			8 mm
Recommended flat-blade screwdriver			XW4Z-00B (Omron)
Current capacity			10 A (per pole)
Number of insertions			50 times
Weight			Approx. 200 g
Mounting			Mounts to DIN Track screw mounting
Dimensions			45 (W) × 90 (H) × 90 (D) mm
Setting method			Communications settings from a dedicated tool via EtherNet/IP
Other functions			Display value selection, self-diagnosis error output, setting value initialization, operation integration
Accessories			Operation manual, CD-ROM (Motor condition monitoring Tool)

✻ Motors other than three-phase induction motors (synchronous motors, single phase motors, servo motors, and stepping motors) are excluded.

Characteristics

Measurement range		Acceleration: 0.05 to 9.99 G, Velocity: 0.90 to 45.00 mm/s, Motor temperature: 0 to 80°C, Differential temperature: 0 to 80°C
Measurement absolute accuracy	**Acceleration**	±3 dB±2 digit (at 25°C)
	Temperature	Motor temperature: ±3°C±2 digit (±6°F±2 digit) ✻1 Temperature Gap: ±6°C±2 digit (±12°F±2 digit) ✻1
Sampling cycle		Acceleration: 50 ms, Velocity: 0.5 s, Temperature: 0.5 s
Moving average frequency		1, 2, 4, 8, 16, 32 times
External trigger	**External contact input specification**	Short-circuit: Residual voltage 1.5 V max. Open: Leakage current 0.1 mA max.
	Current during short-circuiting	Approx. 7 mA
Transistor output		Contact configuration: NPN open collector Rated voltage: 24 VDC (maximum voltage: 26.4 VDC) Max. current: 50 mA, DC
Alarm	**Parameters that can be output**	Degradation level, current
	Expression method	Transistor output, alarm bar
	Setting value	Acceleration: 0.00 to 99.99 G, Velocity: 0.00 to 99.99 mm/s, Motor temperature: 0 to 9999 deg., Differential temperature: 0 to 9999 deg.
	Hysteresis	10% width of setting value
	Reset method	Manual reset/automatic reset (switchable) ✻ Manual return method: Press the ALMRST button
LCD display		7-Segment digital display and single-shot display Font height 14 mm
Applicable standards	**Conforming standards**	EN61010-2-030 Installation environment: Pollution degree 2, overvoltage category II, measurement category II
	EMC	EN61326-1(EMI: Class A EMS: Industrial Location) Acceleration ± 0.1G, Velocity ±2.25mm/s, Temperature ± 6°C
	Safety standards	UL61010-2-030 (listing) Korean Radio Waves Act (Act 10564) RCM EAC
Insulation resistance		20 MΩ min. Between all external terminals and the case Between all power supply terminals and all other terminals Between all sensor connection terminals and trigger input terminal + output terminal + all EtherNet/IP ports
Dielectric strength		2,000 VAC for 1 minute Between all external terminals and the case Between all power supply terminals and all other terminals Between all sensor connection terminals and trigger input terminal + output terminal + all EtherNet/IP ports
Vibration resistance		Vibration frequency 10 to 55 Hz, slice amplitude 0.35 mm in each of X, Y, Z directions 5 minute × 10
Shock resistance		100 m/s^2, 3 times each in 6 directions along 3 axes
Degree of protection		IP20
LED display	**Alarm bar**	Red/Yellow/Green
	MS, NS ✻2	Red/Green
Ethernet communications ✻3	**Number of ports**	1
	Physical layer	Ethernet: Connector RJ45
	Type	100BASE-TX
	Transmission distance (Maximum cable length)	100 m (Between hub and node)
	Topology	Star type
	Protocol	EtherNet/IP Modbus TCP ✻4

✻1. Except when an adhesive attachment is used.
✻2. MS: Product status display, NS: Network status display.
✻3. A tag data link timeout may occur with products manufactured on or before April 30, 2019, over a network system including nodes set for multicast communications. Use the multicast blocking function of the switching hub to prevent multicast packets from reaching the K6CM.
✻4. Can be used only with EIP CPU version 1.2 or higher.

Input part
Vibration & temperature sensor
Ratings

Item	Model	K6CM-VBS1
Power supply voltage		Supplied from K6CM-VB
Sensor head	Max. acceleration	10 G
Ambient operating temperature		Pre-amplifier: -10 to +55°C (with no condensation or icing) Sensor head: -10 to +80°C (with no condensation or icing)
Storage temperature		Pre-amplifier: -20 to +65°C (with no condensation or icing) Sensor head: -20 to +90°C (with no condensation or icing)
Ambient operating humidity		25% to 85% RH (with no condensation)
Storage humidity		25% to 85% RH (with no condensation)
Altitude		2,000 m max.
Case color		Pre-amplifier: Black Sensor head: Silver
Case material		Pre-amplifier: Polycarbonate UL94-V0 Sensor head: Aluminum alloy (ADC12) / Zinc die casting (ZDC2) (the threaded part is Steel (S45C))
Weight		Pre-amplifier: Approx. 210 g (including cables) Sensor head: Approx. 40 g (including cables)
Mounting		Pre-amplifier: DIN rail mounting, screw mounting Sensor head: Screw mounting Between pre-amplifier and sensor head: Connector connection (smart click connector)
Wire length		Between pre-amplifier and sensor head: 2.6 m+0.3 m (cannot be extended) Between pre-amplifier and main unit: 1 m Can be extended up to a maximum length of 100 m ✻

✻ When extending the cable on the pre-amplifier side, use shielded twisted pair cable with wire gauges of AWG24 to 16.

Characteristics

Item	Model	K6CM-VBS1
Measurement range		Specified in main unit “Characteristics”
Applicable standards	Conforming standards	EN 61010-2-030 Installation environment: Pollution degree 2, overvoltage category II, measurement category II
	EMC	EN 61326-1 (EMI: Class A EMS: Industrial Location)
	Safety standards	UL 61010-2-030 (listing) RCM EAC
Insulation resistance		20 MΩ min.
Dielectric strength		500 VAC for one minute
Vibration resistance	Pre-amplifier	Vibration frequency 10 to 55 Hz, slice amplitude 0.35 mm in each of X, Y, Z directions 5 minute × 10
	Sensor head	Vibration frequency 10 to 55 Hz, slice amplitude 0.35 mm in each of X, Y, Z directions 5 minute × 10
Shock resistance	Pre-amplifier	100 m/s^2, 3 times each in 6 directions along 3 axes
	Sensor head	100 m/s^2, 3 times each in 6 directions along 3 axes
Degree of protection	Pre-amplifier	IP20 (excluding the sensor-side cable)
	Sensor head	Conforming to IP67G (JIS C 0920 : 2003, Appendix 1)
LED display		Pre-amplifier PWR: Green, ERR: Red, COM: Orange

Motor condition monitoring Tool (Software included with main unit) Operating Environment

Element	Specification
Supported OS	Windows 7, Windows 8.1, Windows 10 (32 bit/64 bit) (Japanese/English)
.NET	.NET Framework 4 and .NET Framework 3.5
CPU	1 GHz or more, 32 bit or 64 bit processor
Memory	1 GB or more, or 2 GB or more (for 64 bit)
HDD	Available space of 16 GB or more, or 20 GB or more (for 64 bit)
Others	Since this software is provided on a CD-ROM, a CD-ROM reading device must be available. If data is to be collected, a LAN I/F must be available.

Functions/Specifications (For more details, refer to the catalog of each product.)

Item		Specification
Project	**Number of files that can be created**	No limit
Log file		CSV data format
Monitoring cycle		5 second to 366 days
Number that can be registered in one project	**Number of motors (device groups)**	10
	Number of devices per motor (device group)	3 ✻**1**
Graphic display	**Type of graph**	Line graph
	Display period ✻2	1 hour, 1 day, 1 month, 1 year

✻1. One vibration and temperature type, one insulation resistance type, and one current comprehensive diagnosis type can be set for one motor.
✻2. In the software tool version 1.2.0.0 and earlier, the graph display period can be set by selecting the tabs (1 hour, 1 day, 3 months, 6 months, 1 year, 2 years, 5 years, 10 years, 20 years).
In the software tool version 1.2.0.0 and later, you can move the graph in the time axis direction using the graph time axis movement.

Connection Diagram

Terminal Diagram (Main Unit)

K6CM- VB M A -EIP
(1) (2)

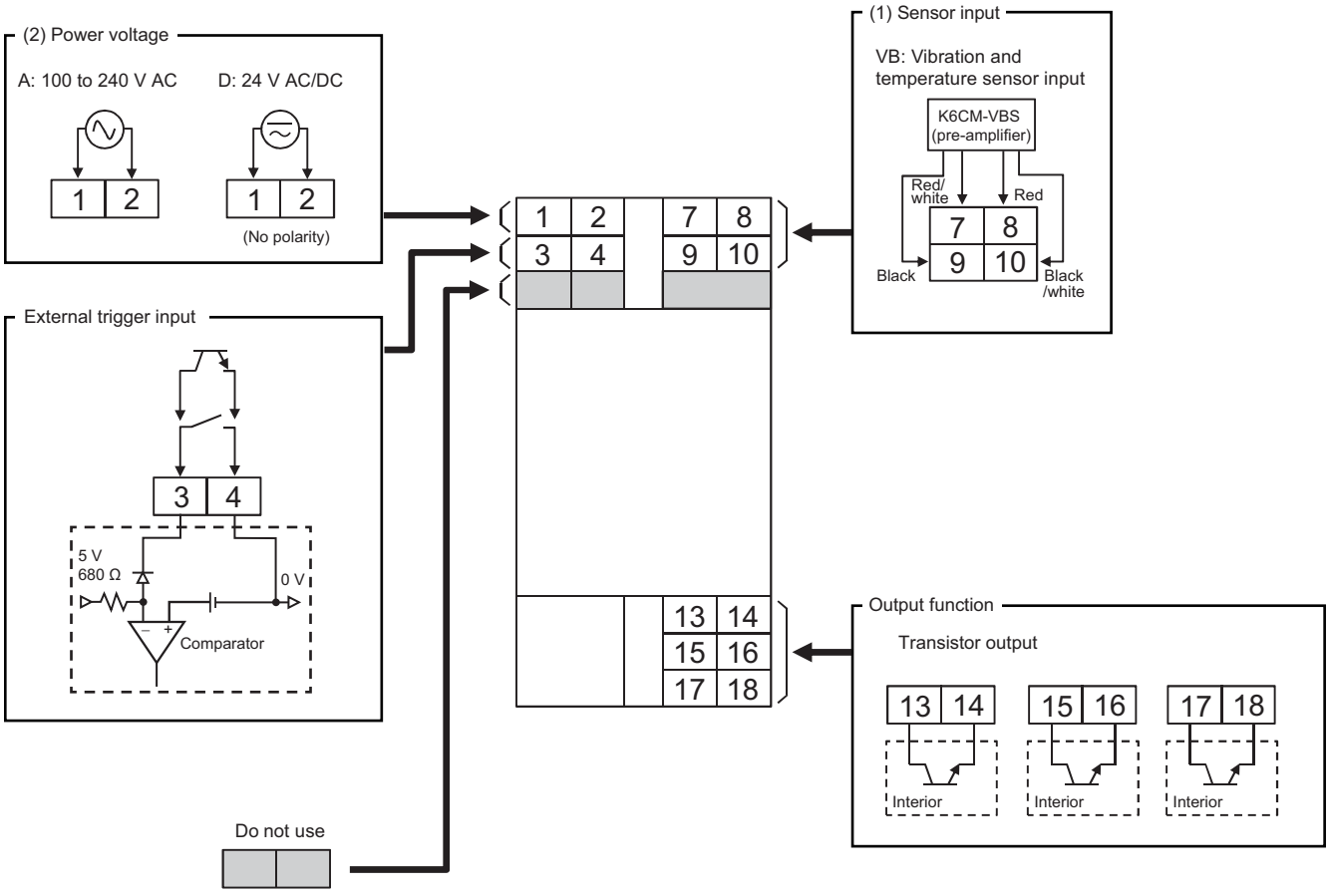

Nomenclature

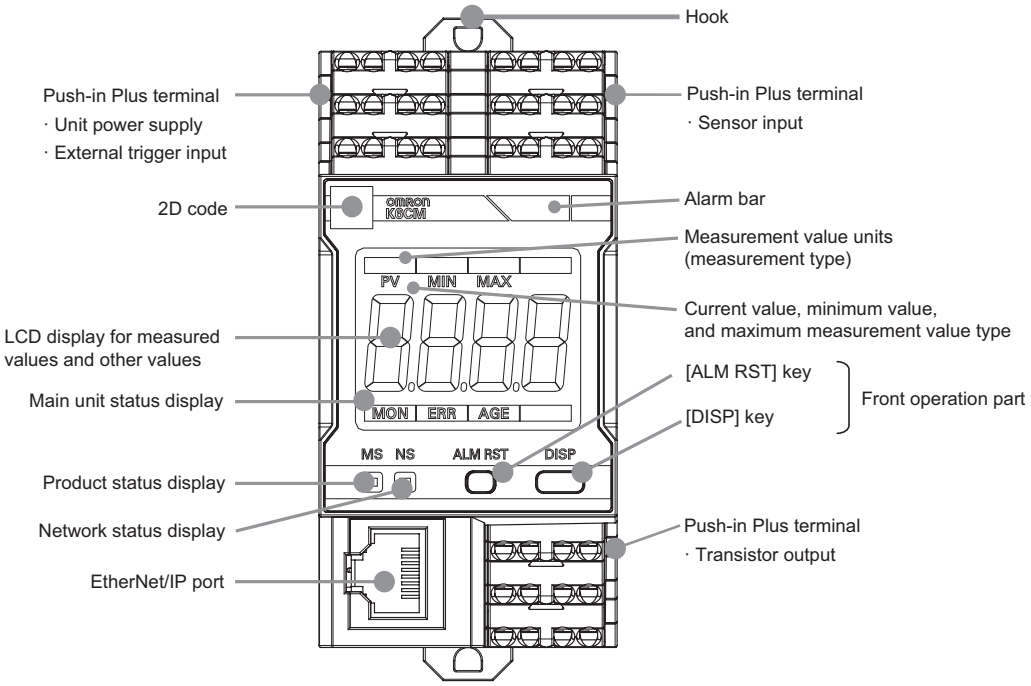

Name		Meaning	
Alarm bar		A bar on which the color of the emitted light changes according to the alarm status.	It is indicated in the following colors during measurement/monitoring. Green: Alarm status (normal) Yellow: Alarm status (Warning) Red: Alarm status (Critical) The alarm bar is lit out in each of the following states: When the power is OFF, when measurement is not being performed, and when a self-diagnosis error has occurred, etc.
Measurement type		Indicates the type of the measured value being displayed. The type can be switched each time the [DISP] key is pressed on the front operation part.	"G": Acceleration, "mm/s": Velocity, "T"; Motor temperature, "⊿T": Temperature Gap (difference between motor temperature and room temperature)
Front operation part	[ALM RST] key	Releases the latched alarm state.	The main use of this key is to release the latched and fixed alarm state after returning from the fault state to the normal state.
	[DISP] key	Switches the type of the measured value being displayed. You can switch between display-fixed mode and display auto switching mode by long-pressing for 3 seconds. ✻1	
	Others	If two keys are simultaneously pressed and held for 5 seconds or longer, all settings of the main unit are reset to factory defaults.	
Main unit status display		The status of the main unit is indicated by lighting of the LCD characters.	"MON": Measurement / monitoring is being performed "ERR": A self-diagnosis error has occurred "AGE": Running Time notification (it is recommended to replace the product main unit)
Transistor output	13-14	Output of the alarm status (Warning). Can be set to Normally Closed or Normally Open.	When measurement/monitoring is in progress, and the output method is Normally Closed ON = Comprehensive alarm: Normal / OFF = Comprehensive alarm: Warning or Critical and the output method is Normally Open OFF = Comprehensive alarm: Normal / ON = Comprehensive alarm: Warning or Critical
	15-16	Output of the alarm status (Critical). Can be set to Normally Closed or Normally Open.	When measurement/monitoring is in progress, and the output method is Normally Closed ON = Comprehensive alarm: Warning or Normal / OFF = Comprehensive alarm: Critical and the output method is Normally Open OFF = Comprehensive alarm: Warning or Normal / ON = Comprehensive alarm: Critical
	17-18	Self-diagnosis error output.	OFF: A self-diagnosis error has occurred ON: Other than the above
External trigger input	3-4	Input of the external contact signal to control measurement timing.	You can use "Trigger Type" to specify whether measurement/monitoring continue for a set time after starting by the rise or fall of the external contact, or are executed while the external contact is ON. You can also specify settings to enable selection of a trigger mode other than external trigger. ✻2

Note: Warning: Indicates that it is time for maintenance.
Critical: Indicates that it is time for replacement.

✻1. Can be used only with EIP CPU version 1.2 or higher.

✻2. Trigger modes other than external trigger

Always: Trigger is not used. Measurement/monitoring are performed continuously after the power of the K6CM unit is turned on.

Internal trigger: Measurement/monitoring starts based on the relation between the measured value and set value (trigger level). You can use "Trigger Type" to specify whether measurement/monitoring start and continue for a set time when the measured value is over, or under, the set value (trigger level), or are executed while the measured value exceeds the set value (trigger level).

Also, the external trigger function can be used only when the insulation resistance type is EIP CPU version 1.1 or higher.

K6CM-VB

Dimensions

(Unit: mm)

List of Models

K6CM-VB



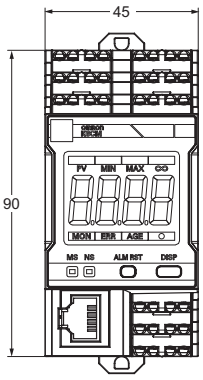

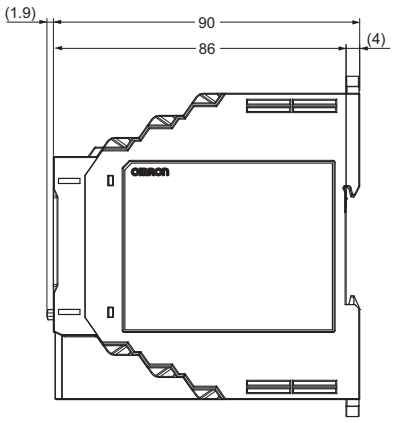

Vibration & temperature sensor

K6CM-VBS1

Pre-amplifier



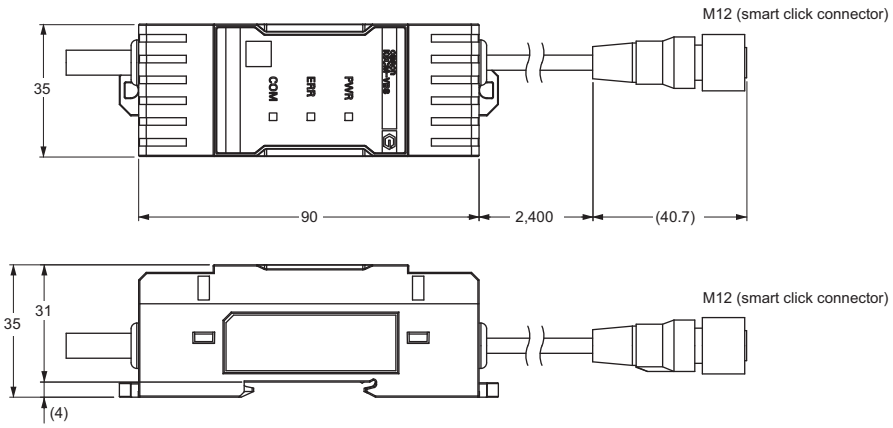

Sensor head



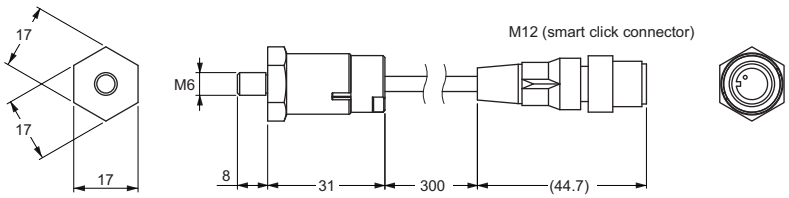

Mounting hole dimensions

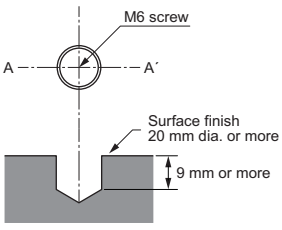

A-A´ cross section

How to Attach the Sensor Head

Tap the outer casing (✻) of the motor perpendicularly for an M6 screw, and screw the vibration sensor head into the tap.

✻ The position above the bearing on the load side is recommended.

K6CM-VBSAT1

Adhesive attachment

Use the adhesive attachment if the motor cannot be tapped.

Sensor head

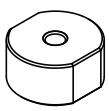

Material: Stainless steel

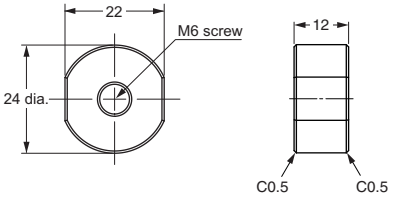

How to Attach the Sensor Head

Prepare a flat surface with a radius of at least 25 mm on the motor outer casing (✻).

Attach the attachment to the flat surface you prepared with an adhesive.

Screw the vibration sensor head into the attachment.

✻ The position above the bearing on the load side is recommended.

Vibration & Temperature Type: Technical Data

Pairing of sensor head and pre-amplifier

The sensor head and the pre-amplifier are calibrated and inspected as a set at the factory shipment. Be sure to use them with the combination shipped. The sensor head cannot be replaced.
To verify the combination, check the serial numbers on the label of the sensor head and the label of the pre-amplifier. The same serial number means the correct combination.
If you change the combination of factory shipping conditions and then use them, the value of acceleration and the value of velocity will be inconsistent, so measurement cannot be correctly monitored.

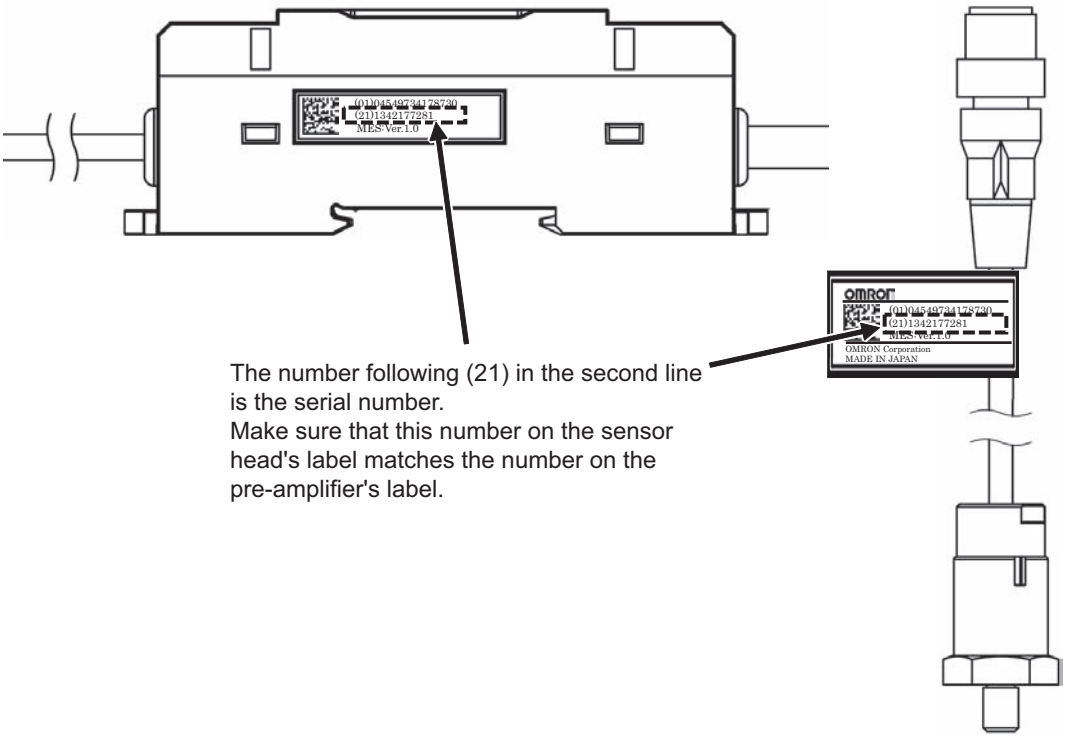

The number following (21) in the second line is the serial number.
Make sure that this number on the sensor head's label matches the number on the pre-amplifier's label.

List of Parameters

Setting values

Parameter	Content
Acceleration alarm threshold value (Critical and Warning)	0.00 to 99.99 G
Velocity alarm threshold value (Critical and Warning)	0.00 to 99.99 mm/s
Motor temperature alarm threshold value (Critical and Warning)	0 to 9999 deg.
Temperature gap alarm threshold value (Critical and Warning)	0 to 9999 deg.
Main unit IP address	Sets the IP address of the main unit. The default value is “192.168.250.10” (common to all models)
Software reset	Restarts the K6CM. Used to enable the settings after changing the setting values. 0 → 1: Execute
MAX/MIN reset	Initializes the MAX/MIN value. 0 → 1: Execute
Display value type	Sets which measurement value to display in the 7-segment display at the front of the main unit. 0: PV (Present Value), 1: MIN, 2: MAX
Trigger mode ✻1	Sets the trigger mode. 0: At all times, 1: External trigger, 2: Internal trigger
Trigger type	Sets Rise, Fall, or Level in the case of an internal trigger or external trigger. 0: Rise, 1: Fall, 2: Level
Trigger level	Sets the trigger level when “Internal trigger” and the trigger type “Level” have been selected.
Monitoring time	Sets the time for continuing measurement or monitoring in the case of an internal trigger or external trigger, when the trigger type is either Rise or Fall. Setting value: 0.1 to 600.0 s
Alarm latch	Sets whether to enable or disable the alarm latch function. 0: Disable (no latch), 1: Enable (latched)
Use Running Time	Sets whether or not to use the main unit residual amount function. 0: OFF (Do not use), 1: ON (Use)
Moving average times	Performs the averaging process for the past n-times of data including the sampling data of that time, each time sampling of the measurement value is performed. 0: OFF, 1: 2 times, 2: 4 times, 3: 8 times, 4: 16 times, 5: 32 times
Temperature unit	Sets the temperature unit. 0: °C, 1: °F
Transistor output method ✻2	0: Normally Closed/1: Normally Open
Monitoring delay time ✻3	Set the delay time from the trigger input to the start of measurement. Set value: 0.0 to 600.0 seconds.

✻1. The external trigger function can be used only when the insulation resistance type is EIP CPU version 1.1 or higher.
✻2. Can be used only with EIP CPU version 1.1 or higher.
✻3. Can be used only with EIP CPU version 1.2 or higher.

Measured values / Status data

Parameter	Content
Acceleration (Present value, MIN, MAX)	0.00 to 9.99 G
Velocity (Present value, MIN, MAX)	0.00 to 45.00 mm/s
Motor temperature	0 to 80°C (32 to 176°F)
Temperature gap (Difference between motor temperature and room temperature)	0 to 80°C (32 to 176°F)
Acceleration status	Bit 00: Present value measurement status Bit 01: Present value input error Bit 04: MAX value measurement status Bit 05: MAX value input error Bit 08: MIN value measurement status Bit 09: MIN value input error Bit 12: Individual alarm threshold value (Warning) setting Bit 13: Individual alarm threshold value (Critical) setting
Velocity status	
Motor temperature status	
Temperature gap status	
Measurement CPU version	Measurement unit version
Main CPU version	Main unit version
EIP CPU version	EtherNet/IP unit version
Measurement status	1: Measurement/monitoring in progress, 0: Measurement/monitoring stopped
Running time status	The product of the operation time and internal temperature is integrated, and ON is set if it reaches the design life. 1: Reached (Operation integration has reached 100%) 0: Not reached (Operation integration has not reached 100%)
Trigger input	Status of external trigger input. 1: ON, 0: OFF
TR1 (Transistor 1 output status)	Status of transistor 1. 1: ON, 0: OFF
TR2 (Transistor 2 output status)	Status of transistor 2. 1: ON, 0: OFF
TR3 (Transistor 3 output status)	Status of transistor 3. 1: ON, 0: OFF
Running time	Coefficient showing the extent of life of the main unit based on the product of the operation time and internal temperature. Incremented in units of 10% starting from 0%. 0000 hex to 0064 hex (0 to 100)
Trigger frequency	Total integrated number of external triggers and internal triggers. Incremented by 1 after every 100 times. 0 to 65535
Threshold value setting of integrated alarm (Warning)	State when the measurement value is “Warning”.
Threshold value setting of integrated alarm (Critical)	State when the measurement value is “Critical”.
Acceleration alarm (Critical and Warning)	ON, OFF
Velocity alarm (Critical and Warning)	ON, OFF
Motor temperature alarm (Critical and Warning)	ON, OFF
Temperature gap alarm (Critical and Warning)	ON, OFF

MEMO

Motor Condition Monitoring Device

K6CM-IS

Quantifying the status of a three-phase induction motor.

- The “insulation resistance” can be always monitored in live wire states.
- Simply attaching the ZCT to the control panel enables monitoring.
- The insulation resistance can be measured even when an inverter is used.
- The software tool (set-up and simple monitoring tool) is also provided.
- Supports Modbus TCP in addition to EtherNet/IP.

✻ZCT (IRT) is compatible with UL Recognition



For the most recent information on models that have been certified for safety standards, refer to your OMRON website.

System Configuration

Basic Configuration

Insulation resistance type (K6CM-IS)
Three-phase, three-conductor, S-phase ground

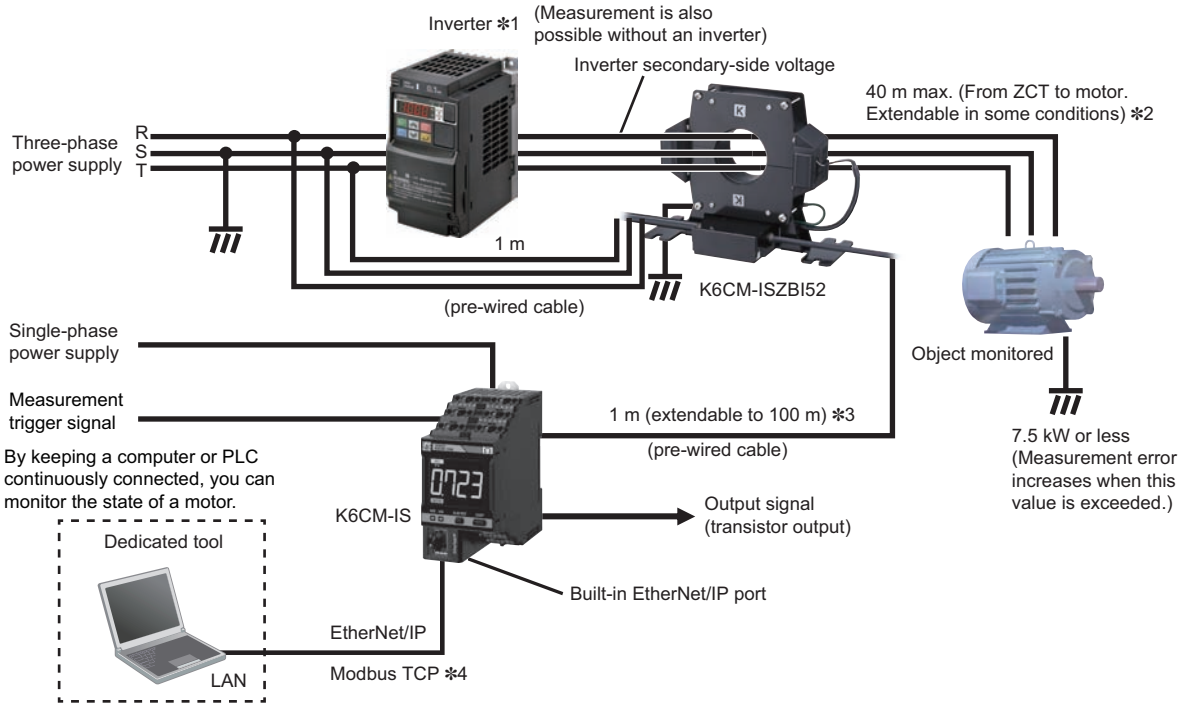

Note: Even without a computer, the alarm bar of the main unit notifies you of changes of motor state.

✻1. Measurement may not be possible depending on the drive frequency of the inverter. See the User's Manual (N219) for more information.
✻2. For details, refer to the technical data on page 36.
✻3. For extension cable, use shielded twisted pair cable with wire gauges of AWG24 to 16.
✻4. Can be used only with EIP CPU version 1.2 or higher.

Three-phase, four-conductor, N-phase ground

Note: When an inverter is used with three-phase, four-conductor, N-phase ground, correct measurement is not possible

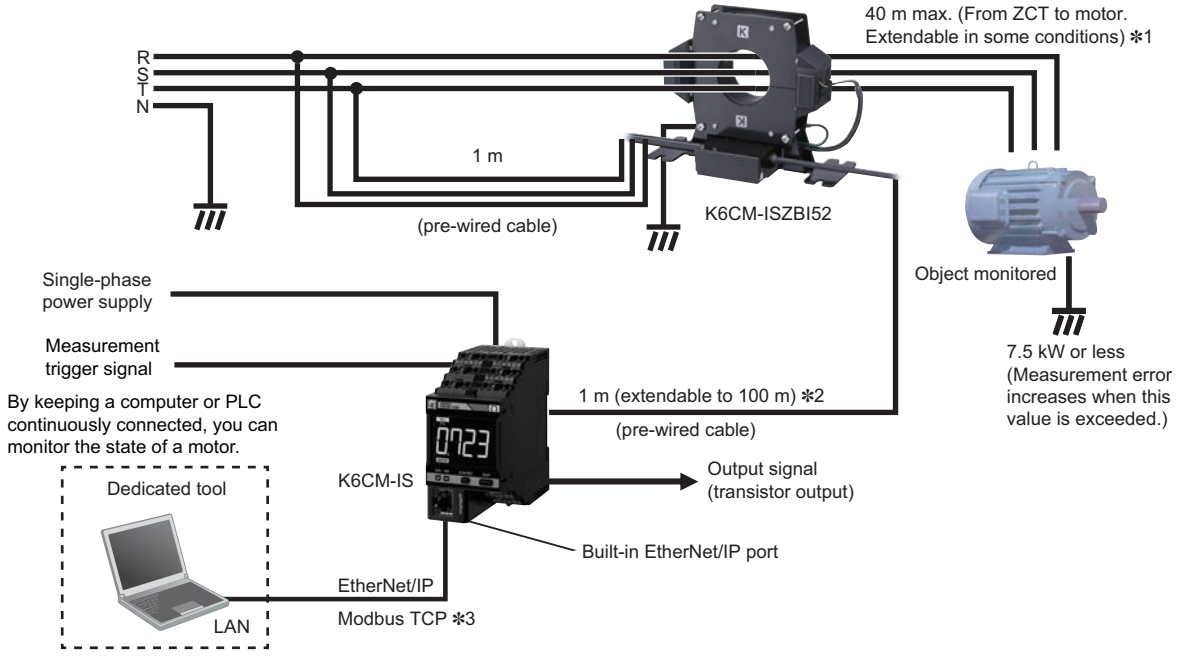

Note: Even without a computer, the alarm bar of the main unit notifies you of changes of motor state.

✻1. For details, refer to the technical data on page 36.
✻2. For extension cable, use shielded twisted pair cable with wire gauges of AWG24 to 16.
✻3. Can be used only with EIP CPU version 1.2 or higher.

Ordering Information

List of Models

Monitoring type	Power supply voltage	Model
Insulation resistance type	100 to 240 VAC	**K6CM-ISMA-EIP**
	24 VAC/VDC	**K6CM-ISMD-EIP**

ZCT (IRT) (Order separately)

Rated voltage	Through hole dia. (mm)	Applicable Relay	Model
200 to 480 VAC	52 dia.	K6CM-IS	**K6CM-ISZBI52**

Note: One sensor is combined with one main unit.
ZCT (IRT) is the abbreviation for Zero Current Transfer (Insulation Resistance Transfer).
A cable for connection is provided with the ZCT (IRT).

EtherNet/IP communications cable recommended parts

Use a Category 5 or higher STP cable (shielded twisted pair cable).

Cable with Connectors

Item		Recommended manufacturer	Cable length (m)	Model
Wire Gauge and Number of Pairs: AWG26, 4-pair Cable Cable Sheath material: LSZH ✻2	Cable with Connectors on Both Ends (RJ45/RJ45) Standard RJ45 plug type ✻1 Cable color: Yellow ✻3 	OMRON	**0.3**	**XS6W-6LSZH8SS30CM-Y**
			0.5	**XS6W-6LSZH8SS50CM-Y**
			1	**XS6W-6LSZH8SS100CM-Y**
			2	**XS6W-6LSZH8SS200CM-Y**
			3	**XS6W-6LSZH8SS300CM-Y**
			5	**XS6W-6LSZH8SS500CM-Y**
Wire Gauge and Number of Pairs: AWG22, 2-pair Cable	Cable with Connectors on Both Ends (RJ45/RJ45) Rugged RJ45 plug type ✻1 Cable color: Light blue 	OMRON	**0.3**	**XS5W-T421-AMD-K**
			0.5	**XS5W-T421-BMD-K**
			1	**XS5W-T421-CMD-K**
			2	**XS5W-T421-DMD-K**
			5	**XS5W-T421-GMD-K**
			10	**XS5W-T421-JMD-K**

✻1. Cables with standard RJ45 plugs are available in the following lengths: 0.2 m, 0.3 m, 0.5 m, 1 m, 1.5 m, 2 m, 3 m, 5 m, 7.5 m, 10 m, 15 m, 20 m.
Cables with rugged RJ45 plugs are available in the following lengths: 0.3 m, 0.5 m, 1 m, 2 m, 3 m, 5 m, 10 m, 15 m.
For details, refer to the *Industrial Ethernet Connectors Catalog* (Cat. No. G019).
✻2. The lineup features Low Smoke Zero Halogen cables for in-cabinet use and PUR cables for out-of-cabinet use.
✻3. Cable colors are available in yellow, green, and blue. The last character of the model changes to "-G" or "-B".

Cable/Connector

Part name	Manufacturer	Model
Cable	Hitachi Metals, Ltd.	**NETSTAR-C5E SA 0.5 × 4P ✻**
RJ45 connector	Panduit Corporation	**MPS588-C ✻**

✻ It is recommended to use the cable and connector in combination described above.

Industrial switching hub (recommended parts)

Product name	Appearance	Specifications			Model
		Function	No. of ports	Failure detection function	
Industrial switching hub		Priority control (QoS): EtherNet/IP control data priority Failure detection: Broadcast storm / LSI failure detection 10/100BASE-TX, Auto-Negotiation	3	No	**W4S1-03B**
			5	No	**W4S1-05B**
			5	Yes	**W4S1-05C**

Ratings and Specifications

List of Models

Ratings

Power Supply	Power supply voltage		K6CM-□□MA: 100 to 240 VAC, 50/60 Hz K6CM-□□MD: 24 VAC, 50/60 Hz, 24 VDC
	Allowable operating voltage range		85% to 110% of power supply voltage
	Power supply frequency range		45 to 65 Hz
	Power consumption		24 VAC/24 VDC: 3.7 VA/2.0 W max. 100 to 240 VAC: 6.2 VA max.
Input	Insulation resistance (ZCT (IRT))	Rated input voltage	(Line voltage) 200 to 480 VAC, 50 Hz/60 Hz
		Rated path current	300 AAC
Applicable motor type			Three-phase induction motor (Rated voltage 480 V or less) ✻
Outputs	Output form		Transistor output
	Output capacity		3-point
	Output rating		Rated voltage: 24 VDC Max. current: 50 mA, DC
Ambient operating temperature			-10 to +55°C (with no condensation or icing)
Storage temperature			-20 to +65°C (with no condensation or icing)
Ambient operating humidity			25% to 85% RH (with no condensation)
Storage humidity			25% to 85% RH (with no condensation)
Case color			Black
Case material			Polycarbonate UL94-V0
Altitude			2,000 m max.
Applicable wires			Stranded wires, solid wires, or ferrules
Applicable wire size			0.25 to 1.5 mm^2 (AWG24 to 16)
Wire insertion force			8 N max. (AWG20)
Screwdriver insertion force			15 N max.
Wire stripping length			8 mm
Recommended flat-blade screwdriver			XW4Z-00B (Omron)
Current capacity			10 A (per pole)
Number of insertions			50 times
Weight			Approx. 200 g
Mounting			Mounts to DIN Track screw mounting
Dimensions			45 (W) × 90 (H) × 90 (D) mm
Setting method			Communications settings from a dedicated tool via EtherNet/IP
Other functions			Display value selection, self-diagnosis error output, setting value initialization, operation integration
Accessories			Operation manual, CD-ROM (Motor condition monitoring Tool)

✻ Motors other than three-phase induction motors (synchronous motors, single phase motors, servo motors, and stepping motors) are excluded.

Characteristics

Measurement range		Insulation resistance: 0.000 M to 1.000 MΩ, Leakage current: 0.0 mA to 200.0 mA
Measurement absolute accuracy	**Insulation resistance**	±35% rdg±2 digit (when the insulation resistance is 0.2 MΩ max.), when a 200-V/7.5-kW max. motor is used ✻**1** ±35% rdg±2 digit (when the insulation resistance is 0.4 MΩ max.), when a 400-V/7.5-kW max. motor is used ✻**1**
Sampling cycle		Normal mode: 10 s, Inverter special measurement mode: 60 s
Moving average frequency		1, 2, 4, 8, 16, 32 times
External trigger ✻2	**External contact input specification**	Short-circuit: Residual voltage 1.5 V max. Open: Leakage current 0.1 mA max.
	Current during short-circuiting	Approx. 7 mA
Transistor output		Contact configuration: NPN open collector Rated voltage: 24 VDC (maximum voltage: 26.4 VDC) Max. current: 50 mA, DC
Alarm	**Parameters that can be output**	Degradation level, current
	Expression method	Transistor output, alarm bar
	Setting value	Insulation resistance: 0.000 M to 9.999 MΩ
	Hysteresis	10% width of setting value
	Reset method	Manual reset/automatic reset (switchable) ✻ Manual return method: Press the ALMRST button
LCD display		7-Segment digital display and single-shot display Font height 14 mm
Applicable standards	**Conforming standards**	EN61010-2-030 Installation environment: Pollution degree 2, overvoltage category II, measurement category II
	EMC	EN61326-1(EMI: Class A EMS: Industrial Location) Acceleration ± 0.1G, Velocity ±2.25mm/s, Temperature ± 6°C, insulation resistance ± 35% rdg
	Safety standards	UL61010-2-030 (listing) Korean Radio Waves Act (Act 10564) RCM EAC
Insulation resistance		20 MΩ min. Between all external terminals and the case Between all power supply terminals and all other terminals Between all sensor connection terminals and trigger input terminal + output terminal + all EtherNet/IP ports
Dielectric strength		2,000 VAC for 1 minute Between all external terminals and the case Between all power supply terminals and all other terminals Between all sensor connection terminals and trigger input terminal + output terminal + all EtherNet/IP ports
Vibration resistance		Vibration frequency 10 to 55 Hz, slice amplitude 0.35 mm in each of X, Y, Z directions 5 minute × 10
Shock resistance		100 m/s^2, 3 times each in 6 directions along 3 axes
Degree of protection		IP20
LED display	**Alarm bar**	Red/Yellow/Green
	MS, NS ✻3	Red/Green
Ethernet communications ✻4	**Number of ports**	1
	Physical layer	Ethernet: Connector RJ45
	Type	100BASE-TX
	Transmission distance (Maximum cable length)	100 m (Between hub and node)
	Topology	Star type
	Protocol	EtherNet/IP Modbus TCP ✻**5**

✻**1.** For details, refer to the technical data on page 36.
✻**2.** The external trigger function can be used only when the insulation resistance type is EIP CPU version 1.1 or higher.
✻**3.** MS: Product status display, NS: Network status display.
✻**4.** A tag data link timeout may occur with products manufactured on or before April 30, 2019, over a network system including nodes set for multicast communications. Use the multicast blocking function of the switching hub to prevent multicast packets from reaching the K6CM.
✻**5.** Can be used only with EIP CPU version 1.2 or higher.

ZCT (IRT)
Ratings and Specifications

Item	Model	K6CM-ISZBI52
Construction		Indoor split type
Rated path current		300 A
Through hole dia.		52 mm dia.
Rated voltage		200 to 480 VAC, 50 Hz/60 Hz three phase
Measurement range		Specified in main unit “Characteristics”
Measurement accuracy		Specified in main unit “Characteristics”
Voltage input terminal		3-terminal lead wire, Length: 1m (pre-wired cable)
Output terminal		4-terminal lead wire, Length: 1m (pre-wired cable) Available wire length 100 m max. ✻
Applicable standards	Conforming standards	EN 61010-2-030 Installation environment: Pollution degree 2, overvoltage category II, measurement category II
	EMC	EN 61326-1 (EMI: Class A EMS: Industrial Location)
	Safety standards	UL 61010-2-030 (Recognition) + CSA C22.2 No. 61010-2-030 RCM EAC
Insulation resistance		Between Mounting bracket - Secondary winding: 100 MΩ min.
Dielectric strength		Between Mounting bracket - Secondary winding: 2000 VAC, 1 minute
Ambient operating temperature		-10 to +55°C (with no condensation or icing)
Ambient operating humidity		25 to 85% (with no condensation)
Weight		Approx. 2.3 kg (including cables)
Degree of protection		IP20

✻ When extending the cable on the pre-amplifier side, use shielded twisted pair cable with wire gauges of AWG24 to 16.

Motor condition monitoring Tool (Software included with main unit)
Operating Environment

Element	Specification
Supported OS	Windows 7, Windows 8.1, Windows 10 (32 bit/64 bit) (Japanese/English)
.NET	.NET Framework 4 and .NET Framework 3.5
CPU	1 GHz or more, 32 bit or 64 bit processor
Memory	1 GB or more, or 2 GB or more (for 64 bit)
HDD	Available space of 16 GB or more, or 20 GB or more (for 64 bit)
Others	Since this software is provided on a CD-ROM, a CD-ROM reading device must be available. If data is to be collected, a LAN I/F must be available.

Functions/Specifications (For more details, refer to the catalog of each product.)

Item		Specification
Project	Number of files that can be created	No limit
Log file		CSV data format
Monitoring cycle		5 second to 366 days
Number that can be registered in one project	Number of motors (device groups)	10
	Number of devices per motor (device group)	3 ✻1
Graphic display	Type of graph	Line graph
	Display period ✻2	1 hour, 1 day, 1 month, 1 year

✻1. One vibration and temperature type, one insulation resistance type, and one current comprehensive diagnosis type can be set for one motor.
✻2. In the software tool version 1.2.0.0 and earlier, the graph display period can be set by selecting the tabs (1 hour, 1 day, 3 months, 6 months, 1 year, 2 years, 5 years, 10 years, 20 years).
In the software tool version 1.2.0.0 and later, you can move the graph in the time axis direction using the graph time axis movement.

Connection Diagram

Terminal Diagram (Main Unit)

K6CM- IS M A -EIP
(1) (2)

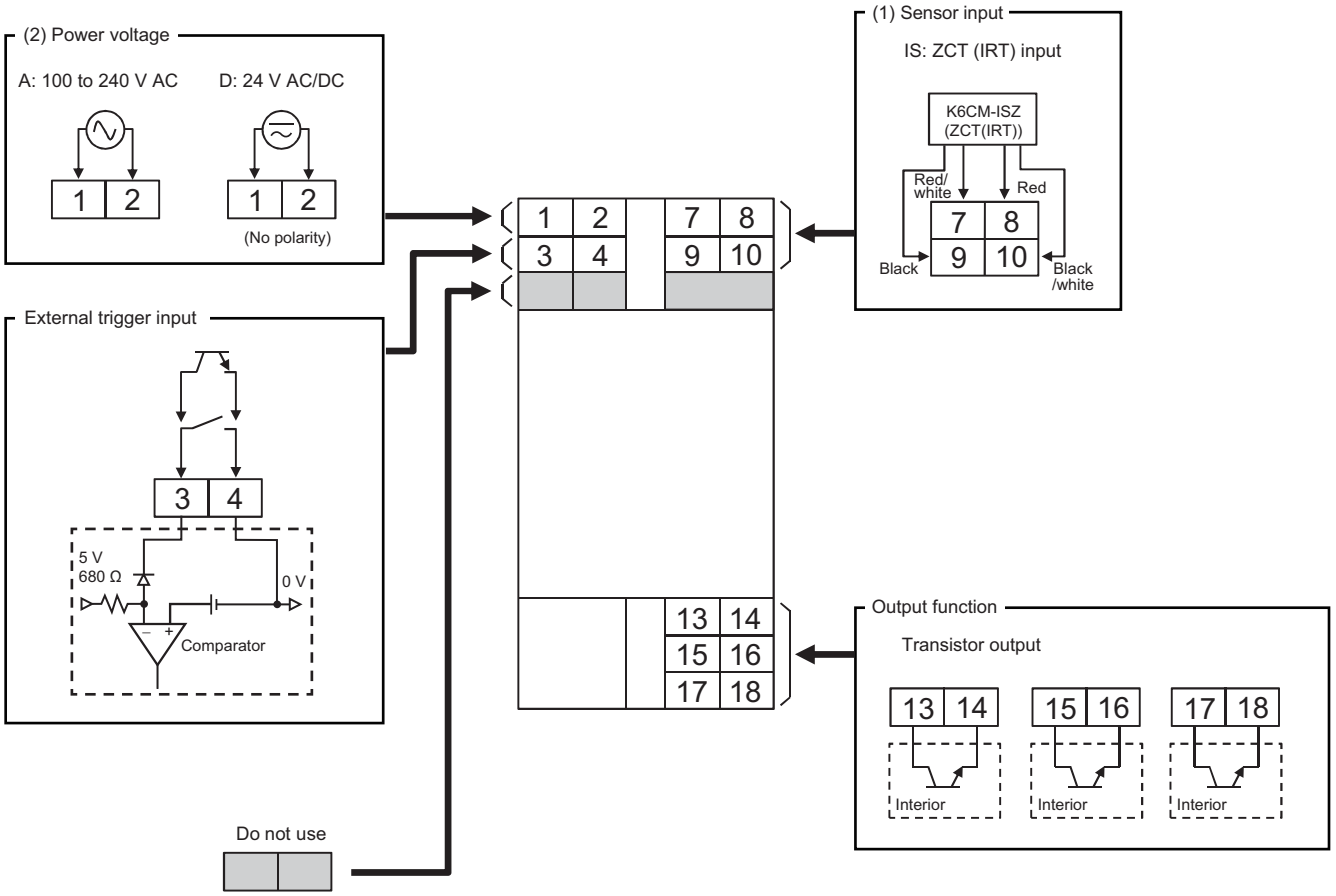

Nomenclature

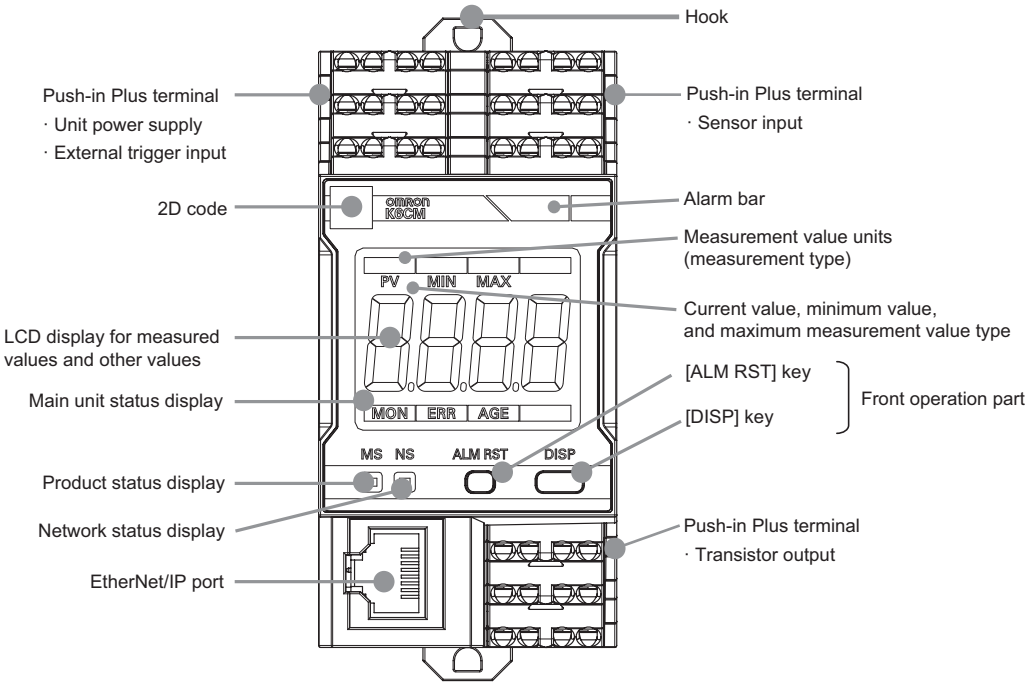

Name		Meaning	
Alarm bar		A bar on which the color of the emitted light changes according to the alarm status.	It is indicated in the following colors during measurement/monitoring. Green: Alarm status (normal) Yellow: Alarm status (Warning) Red: Alarm status (Critical) The alarm bar is lit out in each of the following states: When the power is OFF, when measurement is not being performed, and when a self-diagnosis error has occurred, etc.
Measurement type		Indicates the type of the measured value being displayed. The type can be switched each time the [DISP] key is pressed on the front operation part.	"MΩ": Insulation resistance, "mA": Leakage current
Front operation part	[ALM RST] key	Releases the latched alarm state.	The main use of this key is to release the latched and fixed alarm state after returning from the fault state to the normal state.
	[DISP] key	Switches the type of the measured value being displayed. You can switch between display-fixed mode and display auto switching mode by long-pressing for 3 seconds. ✻1	
	Others	If two keys are simultaneously pressed and held for 5 seconds or longer, all settings of the main unit are reset to factory defaults.	
Main unit status display		The status of the main unit is indicated by lighting of the LCD characters.	"MON": Measurement / monitoring is being performed "ERR": A self-diagnosis error has occurred "AGE": Running Time notification (it is recommended to replace the product main unit)
Transistor output	13-14	Output of the alarm status (Warning). Can be set to Normally Closed or Normally Open.	When measurement/monitoring is in progress, and the output method is Normally Closed ON = Comprehensive alarm: Normal / OFF = Comprehensive alarm: Warning or Critical and the output method is Normally Open OFF = Comprehensive alarm: Normal / ON = Comprehensive alarm: Warning or Critical
	15-16	Output of the alarm status (Critical). Can be set to Normally Closed or Normally Open.	When measurement/monitoring is in progress, and the output method is Normally Closed ON = Comprehensive alarm: Warning or Normal / OFF = Comprehensive alarm: Critical and the output method is Normally Open OFF = Comprehensive alarm: Warning or Normal / ON = Comprehensive alarm: Critical
	17-18	Self-diagnosis error output.	OFF: A self-diagnosis error has occurred ON: Other than the above
External trigger input	3-4	Input of the external contact signal to control measurement timing.	You can use "Trigger Type" to specify whether measurement/monitoring continue for a set time after starting by the rise or fall of the external contact, or are executed while the external contact is ON. You can also specify settings to enable selection of a trigger mode other than external trigger. ✻2

Note: Warning: Indicates that it is time for maintenance.
Critical: Indicates that it is time for replacement.

✻1. Can be used only with EIP CPU version 1.2 or higher.

✻2. Trigger modes other than external trigger

Always: Trigger is not used. Measurement/monitoring are performed continuously after the power of the K6CM unit is turned on.

Internal trigger: Measurement/monitoring starts based on the relation between the measured value and set value (trigger level).
You can use "Trigger Type" to specify whether measurement/monitoring start and continue for a set time when the measured value is over, or under, the set value (trigger level), or are executed while the measured value exceeds the set value (trigger level).

Also, the external trigger function can be used only when the insulation resistance type is EIP CPU version 1.1 or higher.

Dimensions

(Unit: mm)

List of Models

K6CM-IS



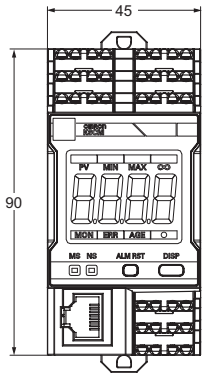

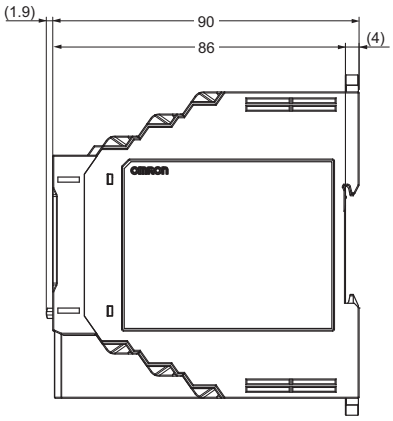

ZCT (IRT)

Indoor split type
K6CM-ISZBI52



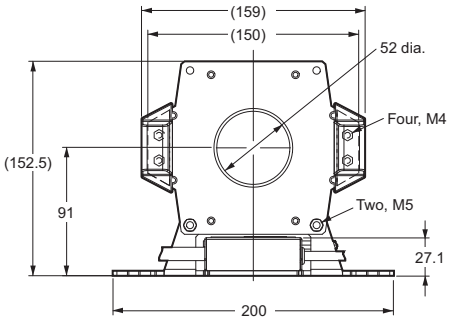

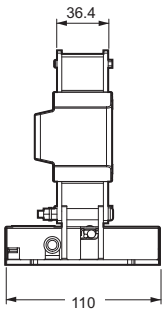

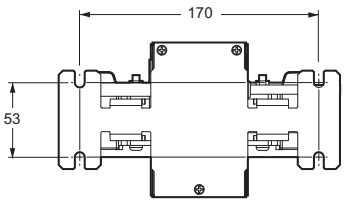

Mounting hole dimensions

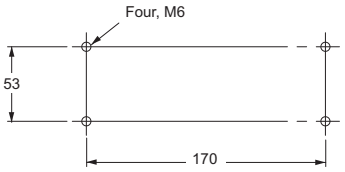

Insulation Resistance Type Technical Data (Reference)

Method of measuring the value on the insulation resistance meter

Leakage current includes two types, namely capacitive leakage current (Ioc) that flows through the earth capacity, and resistive leakage current (Ior) that flows due to the degradation of wiring and devices, and is the cause of electric shock and fire. The leakage current is determined by detecting the value of the zero-phase current Io, which is the combined component of Ioc and Ior. (See the figure below)

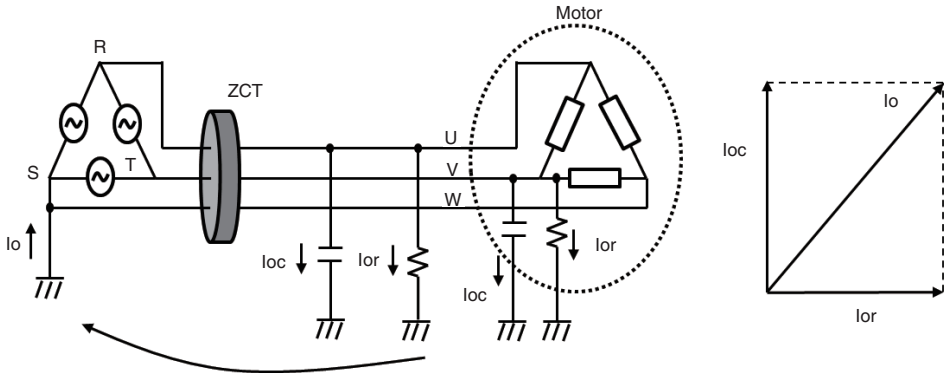

About changes in the measurement accuracy

If there is almost no insulation deterioration in the motor, almost the entire constituent of Io becomes Ioc, and the measurement accuracy of Ior declines. Further, if the Ioc based on the motor-specific electrical capacitance is larger than Ior, then the measurement accuracy will similarly decline. Particularly, if the electrical capacitance increases in proportion to the capacitance of the motor, the measurement accuracy changes depending on the motor capacitance.
The following items are the possible parameters affecting the measurement accuracy.

Increase in Ioc ..... Type of motor (manufacturer, structure), capacitance, number of poles, and the length of wire between ZCT (IRT) and the motor
Other noise components..... Through-current, through-position
External factors..... Voltage imbalance



Capacitance	Low	High
No. of poles	Less	Many
Wire length	Short	Long

[Effect of residual current]

Another noise component is the residual current✻ (hereinafter, specified as Ir). Ir increases in proportion to the through-current.

✻ Residual current
Residual current refers to the error that occurs as a result of an imbalance in the magnetic flux of each phase inside the core due to the arrangement of the through-wire of ZCT.
Errors also occur as a result of the imbalance in the magnetic circuit of ZCT.

Ir combines with Io, and is output to the secondary side of ZCT. Ir is the same frequency component as Ior, and the amount of current or the phase difference with respect to Ior changes depending on the through-position of the power line passing through ZCT. Therefore, isolation from Ior, which must essentially be detected, becomes difficult.
If the position of ZCT and the through-wire is fixed once, the phase of Ir does not change. Moreover, by fixing the through-wire in the center of ZCT, Ir can be reduced. Fix and install the through-wire in the center as much as possible.
Use the following holder to fix the through-wire in the center of ZCT.

Part name	Manufacturer	Model
Rubber holder	Midori Anzen Co. Ltd.	**HZ-25**

List of Parameters

Setting values

Parameter	Content
Insulation resistance alarm threshold value (Critical and Warning)	0.000 to 9.999 MΩ
Main unit IP address	Sets the IP address of the main unit. The default value is “192.168.250.10” (common to all models)
Software reset	Restarts the K6CM. Used to enable the settings after changing the setting values. 0 → 1: Execute
MAX/MIN reset	Initializes the MAX/MIN value. 0 → 1: Execute
Display value type	Sets which measurement value to display in the 7-segment display at the front of the main unit. 0: PV (Present Value), 1: MIN, 2: MAX
Trigger mode ✻**1**	Sets the trigger mode. 0: At all times, 1: External trigger, 2: Internal trigger
Trigger type	Sets Rise, Fall, or Level in the case of an internal trigger or external trigger. 0: Rise, 1: Fall, 2: Level
Trigger level	Sets the trigger level when “Internal trigger” and the trigger type “Level” have been selected.
Monitoring time	Sets the time for continuing measurement or monitoring in the case of an internal trigger or external trigger, when the trigger type is either Rise or Fall. Setting value: 0.1 to 600.0 s
Alarm latch	Sets whether to enable or disable the alarm latch function. 0: Disable (no latch), 1: Enable (latched)
Use Running Time	Sets whether or not to use the main unit residual amount function. 0: OFF (Do not use), 1: ON (Use)
Moving average times	Performs the averaging process for the past n-times of data including the sampling data of that time, each time sampling of the measurement value is performed. 0: OFF, 1: 2 times, 2: 4 times, 3: 8 times, 4: 16 times, 5: 32 times
Circuit topology	Sets the Circuit topology. 0: Three-phase, three-conductor, S-phase ground 1: Three-phase, four-conductor, N-phase ground, load-side ⊿ connection
Using inverter	Sets the Using inverter. 0: OFF (without inverter), 1: ON (with inverter)
Inverter special measurement	Sets the inverter special measurement. 0: OFF, 1: ON (Refers to the special calculation performed when the inverter frequency and commercial frequency are close.)
Transistor output method ✻**2**	0: Normally Closed/1: Normally Open
Monitoring delay time ✻**3**	Set the delay time from the trigger input to the start of measurement. Set value: 0.0 to 600.0 seconds.

✻**1.** The external trigger function can be used only when the insulation resistance type is EIP CPU version 1.1 or higher.
✻**2.** Can be used only with EIP CPU version 1.1 or higher.
✻**3.** Can be used only with EIP CPU version 1.2 or higher.

Measured values / Status data

Parameter	Content
Insulation resistance (Present value, MIN, MAX)	0.000 to 1.000 MΩ
Leakage current Ior (Present value, MIN, MAX)	0.0 to 200.0 mA
Leakage current Ioc (Present value)	0.0 to 200.0 mA
Ior status	Bit 00: Present value measurement status Bit 01: Present value input error Bit 04: MAX value measurement status Bit 05: MAX value input error Bit 08: MIN value measurement status Bit 09: MIN value input error Bit 12: Individual alarm threshold value (Warning) setting Bit 13: Individual alarm threshold value (Critical) setting
Ioc status	
Measurement CPU version	Measurement unit version
Main CPU version	Main unit version
EIP CPU version	EtherNet/IP unit version
Measurement status	1: Measurement/monitoring in progress, 0: Measurement/monitoring stopped
Running time status	The product of the operation time and internal temperature is integrated, and ON is set if it reaches the design life. 1: Reached (Operation integration has reached 100%) 0: Not reached (Operation integration has not reached 100%)
Trigger input	Status of external trigger input. 1: ON, 0: OFF
TR1 (Transistor 1 output status)	Status of transistor 1. 1: ON, 0: OFF
TR2 (Transistor 2 output status)	Status of transistor 2. 1: ON, 0: OFF
TR3 (Transistor 3 output status)	Status of transistor 3. 1: ON, 0: OFF
Running time	Coefficient showing the extent of life of the main unit based on the product of the operation time and internal temperature. Incremented in units of 10% starting from 0%. 0000 hex to 0064 hex (0 to 100)
Trigger frequency	Total integrated number of external triggers and internal triggers. Incremented by 1 after every 100 times. 0 to 65535
Threshold value setting of integrated alarm (Warning)	State when the measurement value is “Warning”.
Threshold value setting of integrated alarm (Critical)	State when the measurement value is “Critical”.
Insulation resistance alarm (Critical and Warning)	ON, OFF

Terms and Conditions Agreement

Read and understand this catalog.

Please read and understand this catalog before purchasing the products. Please consult your OMRON representative if you have any questions or comments.

Warranties.

(a) Exclusive Warranty. Omron's exclusive warranty is that the Products will be free from defects in materials and workmanship for a period of twelve months from the date of sale by Omron (or such other period expressed in writing by Omron). Omron disclaims all other warranties, express or implied.

(b) Limitations. OMRON MAKES NO WARRANTY OR REPRESENTATION, EXPRESS OR IMPLIED, ABOUT NON-INFRINGEMENT, MERCHANTABILITY OR FITNESS FOR A PARTICULAR PURPOSE OF THE PRODUCTS. BUYER ACKNOWLEDGES THAT IT ALONE HAS DETERMINED THAT THE PRODUCTS WILL SUITABLY MEET THE REQUIREMENTS OF THEIR INTENDED USE.

Omron further disclaims all warranties and responsibility of any type for claims or expenses based on infringement by the Products or otherwise of any intellectual property right. (c) Buyer Remedy. Omron's sole obligation hereunder shall be, at Omron's election, to (i) replace (in the form originally shipped with Buyer responsible for labor charges for removal or replacement thereof) the non-complying Product, (ii) repair the non-complying Product, or (iii) repay or credit Buyer an amount equal to the purchase price of the non-complying Product; provided that in no event shall Omron be responsible for warranty, repair, indemnity or any other claims or expenses regarding the Products unless Omron's analysis confirms that the Products were properly handled, stored, installed and maintained and not subject to contamination, abuse, misuse or inappropriate modification. Return of any Products by Buyer must be approved in writing by Omron before shipment. Omron Companies shall not be liable for the suitability or unsuitability or the results from the use of Products in combination with any electrical or electronic components, circuits, system assemblies or any other materials or substances or environments. Any advice, recommendations or information given orally or in writing, are not to be construed as an amendment or addition to the above warranty.

See http://www.omron.com/global/ or contact your Omron representative for published information.

Limitation on Liability; Etc.

OMRON COMPANIES SHALL NOT BE LIABLE FOR SPECIAL, INDIRECT, INCIDENTAL, OR CONSEQUENTIAL DAMAGES, LOSS OF PROFITS OR PRODUCTION OR COMMERCIAL LOSS IN ANY WAY CONNECTED WITH THE PRODUCTS, WHETHER SUCH CLAIM IS BASED IN CONTRACT, WARRANTY, NEGLIGENCE OR STRICT LIABILITY.

Further, in no event shall liability of Omron Companies exceed the individual price of the Product on which liability is asserted.

Suitability of Use.

Omron Companies shall not be responsible for conformity with any standards, codes or regulations which apply to the combination of the Product in the Buyer's application or use of the Product. At Buyer's request, Omron will provide applicable third party certification documents identifying ratings and limitations of use which apply to the Product. This information by itself is not sufficient for a complete determination of the suitability of the Product in combination with the end product, machine, system, or other application or use. Buyer shall be solely responsible for determining appropriateness of the particular Product with respect to Buyer's application, product or system. Buyer shall take application responsibility in all cases.

NEVER USE THE PRODUCT FOR AN APPLICATION INVOLVING SERIOUS RISK TO LIFE OR PROPERTY OR IN LARGE QUANTITIES WITHOUT ENSURING THAT THE SYSTEM AS A WHOLE HAS BEEN DESIGNED TO ADDRESS THE RISKS, AND THAT THE OMRON PRODUCT(S) IS PROPERLY RATED AND INSTALLED FOR THE INTENDED USE WITHIN THE OVERALL EQUIPMENT OR SYSTEM.

Programmable Products.

Omron Companies shall not be responsible for the user's programming of a programmable Product, or any consequence thereof.

Performance Data.

Data presented in Omron Company websites, catalogs and other materials is provided as a guide for the user in determining suitability and does not constitute a warranty. It may represent the result of Omron's test conditions, and the user must correlate it to actual application requirements. Actual performance is subject to the Omron's Warranty and Limitations of Liability.

Change in Specifications.

Product specifications and accessories may be changed at any time based on improvements and other reasons. It is our practice to change part numbers when published ratings or features are changed, or when significant construction changes are made. However, some specifications of the Product may be changed without any notice. When in doubt, special part numbers may be assigned to fix or establish key specifications for your application. Please consult with your Omron's representative at any time to confirm actual specifications of purchased Product.

Errors and Omissions.

Information presented by Omron Companies has been checked and is believed to be accurate; however, no responsibility is assumed for clerical, typographical or proofreading errors or omissions.

KC Mark 표준 준수

사 용 자 안 내 문

이 기기는 업무용 환경에서
사용할 목적으로 적합성평가를 받은
기기로서 가정용 환경에서 사용하는
경우 전파간섭의 우려가 있습니다.

Windows is either a registered trademark or trademark of Microsoft Corporation in the United States and/or other countries.
EtherNet/IP™ is a trademark of ODVA.
Modbus is a registered trademark or trademark of Schneider Electric USA, Inc. in Japan, the United States or other countries.
TPM trademarks and logos are registered trademarks or trademarks of the Japan Institute of Plant Maintenance in Japan and other countries.
Other company names and product names in this document are the trademarks or registered trademarks of their respective companies.
Some images are used under license from Shutterstock.com.

OMRON Corporation **Industrial Automation Company**
Kyoto, JAPAN
Contact: www.ia.omron.com

Regional Headquarters
OMRON EUROPE B.V.
Wegalaan 67-69, 2132 JD Hoofddorp
The Netherlands
Tel: (31)2356-81-300/Fax: (31)2356-81-388

OMRON ELECTRONICS LLC
2895 Greenspoint Parkway, Suite 200
Hoffman Estates, IL 60169 U.S.A.
Tel: (1) 847-843-7900/Fax: (1) 847-843-7787

OMRON ASIA PACIFIC PTE. LTD.
No. 438A Alexandra Road # 05-05/08 (Lobby 2),
Alexandra Technopark,
Singapore 119967
Tel: (65) 6835-3011/Fax: (65) 6835-2711

OMRON (CHINA) CO., LTD.
Room 2211, Bank of China Tower,
200 Yin Cheng Zhong Road,
PuDong New Area, Shanghai, 200120, China
Tel: (86) 21-5037-2222/Fax: (86) 21-5037-2200

Authorized Distributor:

© OMRON Corporation 2017-2020 All Rights Reserved.
In the interest of product improvement,
specifications are subject to change without notice.

CSM_3_1
Cat. No. N218-E1-08 0320(1117)