General Purpose Relay
MJN

Relay with Plug-in Termination, available in SPDT, DPDT or 3PDT models

- Rugged power driver offers superior 3/16” through-air and 3/8 over-surface spacing
- Interlocked frame and contact block prevent contact misalignment during plug-in
- Available with dust covers, indicator lamps and push-to-operate buttons
- UL and CSA recognition as motor controllers up to 600 VAC
- Recognized for 1/2 hp motor control applications at 240/480/600 VAC (1/3 hp at 120 VAC)



Ordering Information

To Order: Select part number and add the desired coil voltage rating (e.g. MJN1C-AC24).

Item			**Model**			
Type	**Terminal**	**Contact form**	**10A Version, flange mounting**	**20 A Version, flange mounting**	**30A Version, flange mounting**	**10 A Relay only**
Standard	Plug-in	SPDT	**MJN1CF**	---	**MJN1Z-E-RP**	**MJN1C**
		DPDT	**MJN2CF**	**MJN2CE**	---	**MJN2C**
		3PDT	**MJN3CF**	---	---	**MJN3C**
LED indicator	Plug-in	SPDT	**MJN1CF-N***	---	---	**MJN1C-N**
		DPDT	**MJN2CF-N***	---	---	**MJN2C-N**
		3PDT	**MJN3CF-N***	---	---	**MJN3C-N**
Push-to-operate button	Plug-in	SPDT	**MJN1CF-I***	---	---	**MJN1C-I**
		DPDT	**MJN2CF-I***	---	---	**MJN2C-I**
		3PDT	**MJN3CF-I***	---	---	**MJN3C-I**
Push-to-operate button & LED indicator	Plug-in	SPDT	**MJN1CF-IN***	---	---	**MJN1C-IN**
		DPDT	**MJN2CF-IN***	---	---	**MJN2C-IN**
		3PDT	**MJN3CF-IN***	---	---	**MJN3C-IN**
Latching	Plug-in	DPDT	---	---	---	**MJN2CK**

Note: All part numbers marked with an “*” are non-standard parts. Contact an Omron representative for additional information.

Specifications

■ Contact Data

Configuration		SPDT, DPDT, 3PDT
Initial contact resistance		50 mΩ max.
Materials		3/16" diameter Ag-Alloy
Contact UL ratings	**10 A**	10 amp @ 28 VDC and 120/240 VAC at 80% pf, 1/3 hp @ 120 VAC, 1/2 hp @ 277/240/480/600 VAC 8.5 FLA - 36 LRA at 18 VDC, 3 amp @ 480/600 VAC at 80% pf, 10 amp @ 277 VAC resistive
	20 A	20 amp @28 VDC and 120/240/277 VAC, 10 amp @ 480/600 VAC, 3.4 hp @ 120 VAC, 1-1/2 hp @ 240 VAC, 17 FLA - 65 LRA at 300VAC
	30 A	30 amp @ 28 VDC, 15 amp @ 480 / 600 VAC, 1hp @ 120 VAC, 1-1/2 hp @ 240 VAC
UL recognized file number		E41643

■ Coil Data

Non-latching - AC

Nominal voltage	**Resistance in Ohms ± 10%**		**Nominal coil power**		**Coil voltages**	**Insulation resistance**	**Pick up voltage at 25°C (77°F)**
	1 & 2 PDT	**3PDT**	**1 & 2 PDT**	**3PDT**			
6 VAC	6.0	4.2	1.7 VA	2.0 VA	6 to 240 VAC 50/60 Hz	1,000 MΩ min. @ 500 VDC	85% of nominal
12 VAC	21	18					
24 VAC	75	72					
120 VAC	2,250	1,700					
240 VAC	9,100	7,200					

Non-latching - DC

Nominal voltage	**Resistance in Ohms ± 10%**	**Nominal coil power**	**Coil voltages**	**Insulation resistance**	**Pick up voltage at 25°C (77°F)**
5 VDC	20	1.2 W	5 to 110 VDC	1,000 MΩ min. @ 500 VDC	75% of nominal
6 VDC	32				
12 VDC	120				
24 VDC	470				
48 VDC	1,800				
110 VDC	10,000				

Latching - AC

Nominal voltage	**Latch coil resistance in Ohms ± 10%**	**Unlatch coil resistance in Ohms ± 10%**	**Nominal coil power**		**Coil voltages**	**Insulation resistance**	**Operate voltage (latch/unlatch) at 25°C (77°F) (see note)**
6 VAC	5.5	105	1.7 VA	2.0 VA	6 to 240 VAC 50/60 Hz	1,000 MΩ min. @ 500 VDC	85% of nominal
12 VAC	22	445					
24 VAC	88	1,740					
120 VAC	2,090	17,430					

Note: 120% of nominal or greater (one second duration single pulse) unlatch voltage - - above this the relay latches again.
Maximum continuous voltage: 120% of nominal (one coil only).

Latching - DC

Nominal voltage	Latch coil resistance in Ohms ± 10%	Unlatch coil resistance in Ohms ± 10%	Nominal coil power	Coil voltages	Insulation resistance	Operate voltage (latch/unlatch) at 25°C (77°F) (see note)
5 VDC	14	45	1.2 W	5 to 110 VDC	1,000 MΩ min. @ 500 VDC	75% of nominal
6 VDC	20	64				
12 VDC	80	275				
24 VDC	330	1,070				
48 VDC	1,290	2,850				
110 VDC	5,125	10,750				

Note: 120% of nominal or greater (one second duration single pulse) unlatch voltage - - above this the relay latches again.
Maximum continuous voltage: 120% of nominal (one coil only).

■ Characteristics

Operate time			15 ms nominal; 20 ms maximum
Release time			6 ms nominal; 10 ms maximum
Latch time			13 ms nominal with a one second pulse of nominal voltage (See note)
Unlatch time			13 ms nominal with a one second pulse of nominal unlatch voltage after latching with a one second pulse of nominal latching voltage (See note)
Operating ambient temperature	**AC: 1 & 2 pole**	**Operating**	-45° to 60°C (-49° to 140°F)
		Storage	-65° to 100°C (-85° to 212°F)
	AC: 3 pole	**Operating**	-45° to 45°C (-49° to 113°F)
		Storage	-65° to 100°C (-85° to 212°F)
	DC: 1, 2 & 3 pole	**Operating**	-45° to 70°C (-49° to 158°F)
		Storage	-65° to 100°C (-85° to 212°F)
Insulation material			High quality phenolic
Duty cycle			Rated for continuous duty operation at 25% overvoltage
Shock			15 g's 11±1 ms (non-operating test, no mechanical damage)
Vibration			0.1" DA or 10 g's, 10 to 55 Hz (operating test, no contact chatter)
Life expectancy		**Electrical at rated load**	100,000 operations
		Mechanical	10,000,000 operations
Dielectric strength			Greater than 750 VAC, RMS 60 Hz across open contacts Greater than 2,500 VAC, RMS 60 Hz all other mutually insulated elements
Terminals			Quick Connect
Weight			64 g (2.3 oz) open relay 54 g (3.0 oz) enclosed relay

Note: A latch pulse of 50 ms minimum at nominal voltage is recommended to insure positive latching.

Terminal Arrangement

■ Non-Latching

Reference only

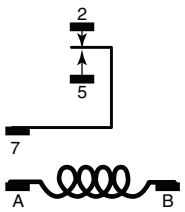

1 Form C (SPDT)

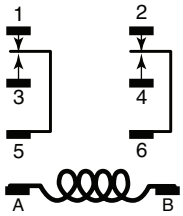

2 Form C (DPDT)

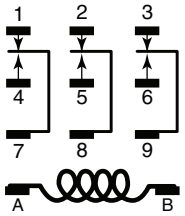

3 Form C (3PDT)

■ Latching / Unlatching

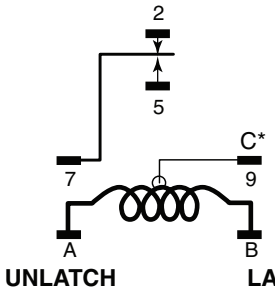

1 Form C (SPDT)

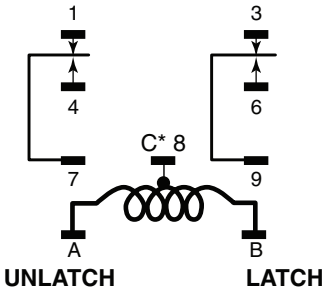

2 Form C (DPDT)

* C denoted common connection. On 3-pole relays the common connection is a wire lead coming off of the coil. It is not terminated to the relay header. Consult your Omron representative for single coil or isolated double coil models.

Dimensions

Unit: mm (inch)

■ Relays

MJN□CF/MJN2CE
Dust cover with mounting flanges

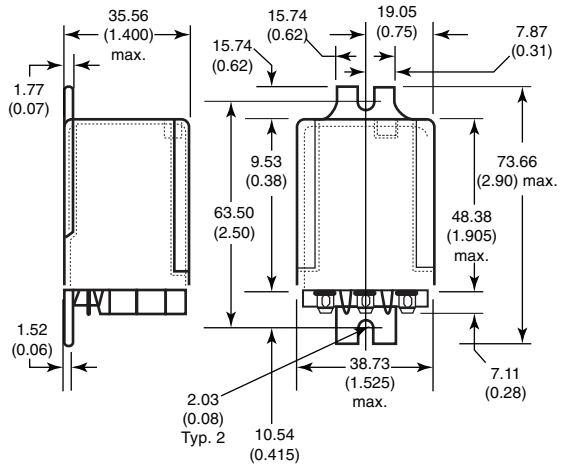

Dust cover MJN

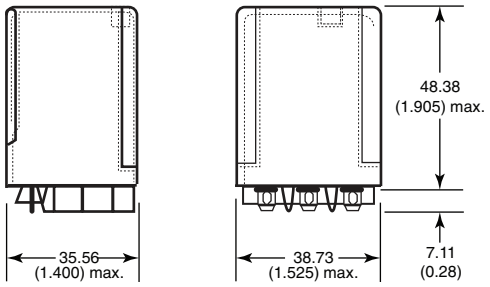

■ Terminal-10 Amp Version

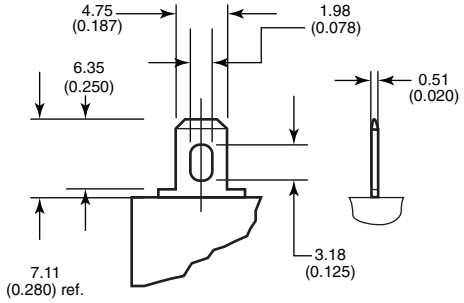

Note: Mates with .187" UL standard quick-connect terminals; also suitable for solder connection.

■ Terminal-20 and 30 Amp Versions

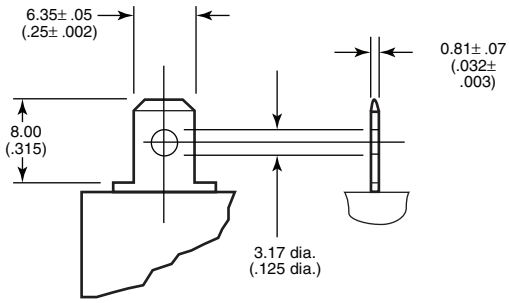

■ Hold Down Springs

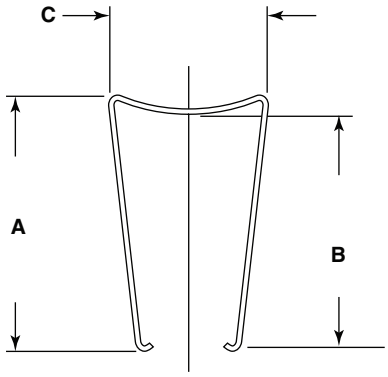

Hold Down Springs Dimensional Reference chart

Part number	Reference dimension	Actual dimension
PYMJN-PCB	A	58.67 (2.31)
	B	53.82 (2.12)
	C	37.08 (1.46)
PYMJN-S	A	58.67 (2.31)
	B	53.59 (2.11)
	C	40.26 (1.59)

■ Sockets (for use with 10 Amp, non-flange mount versions)

PTF11PC

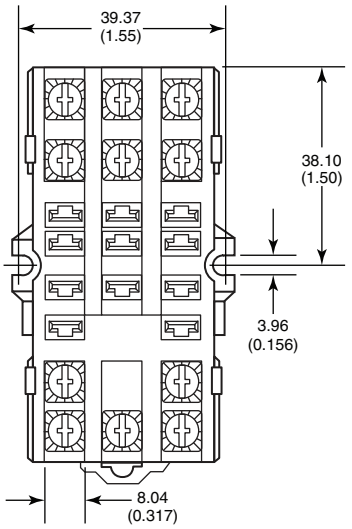

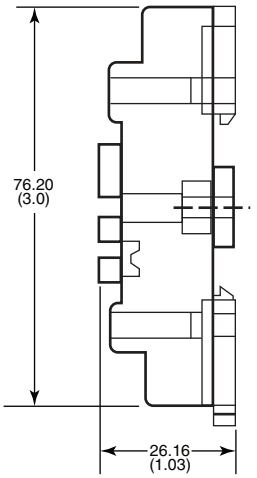

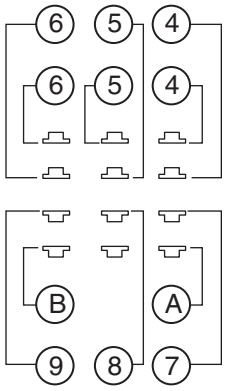

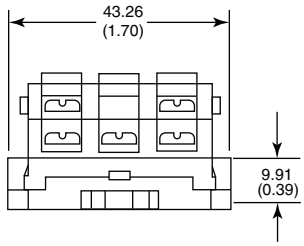

PTF21PC

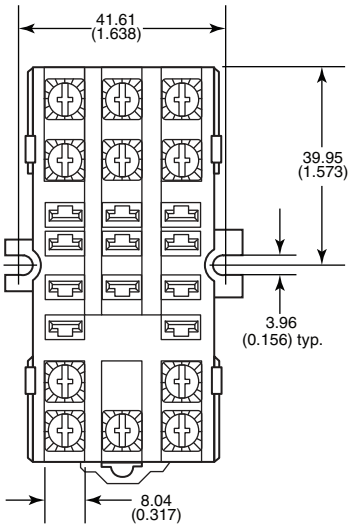

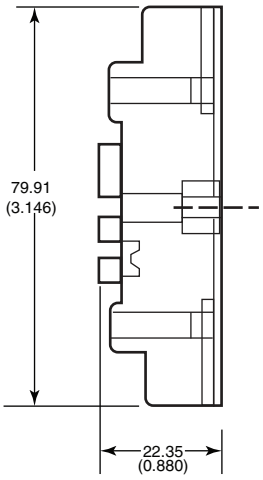

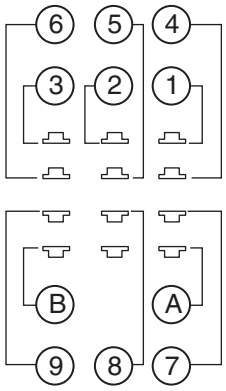

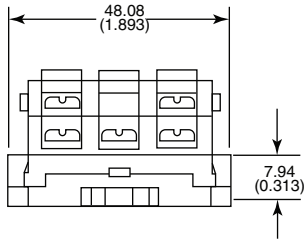

PTFPCB

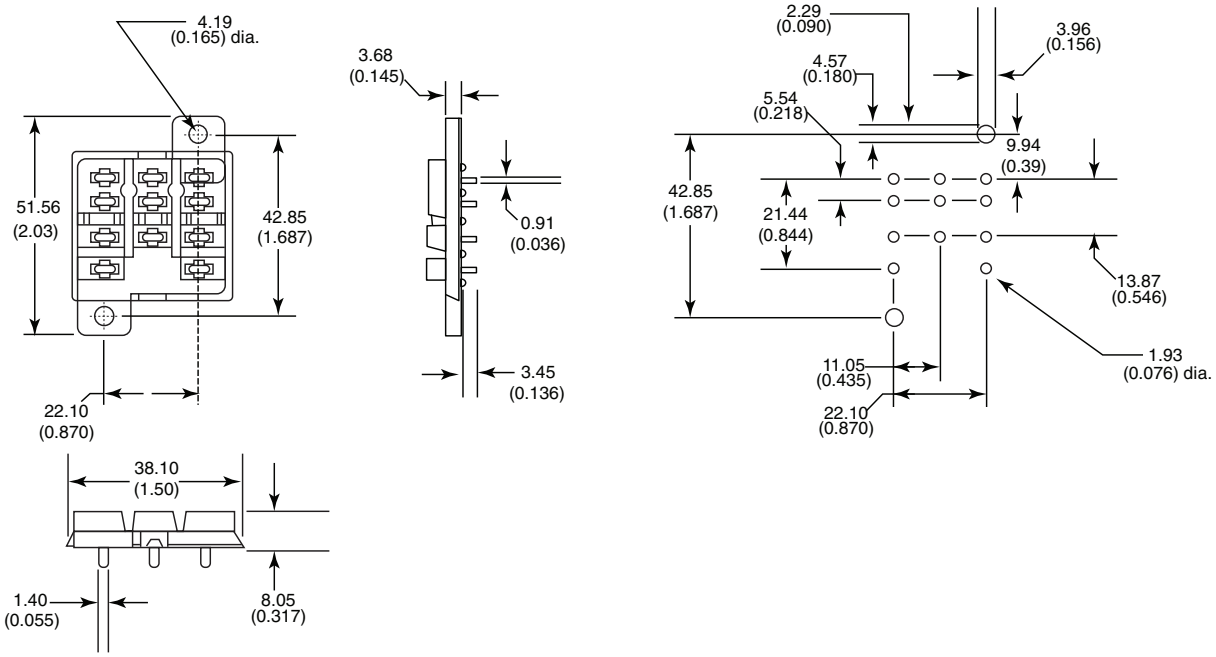

PTF11QDC

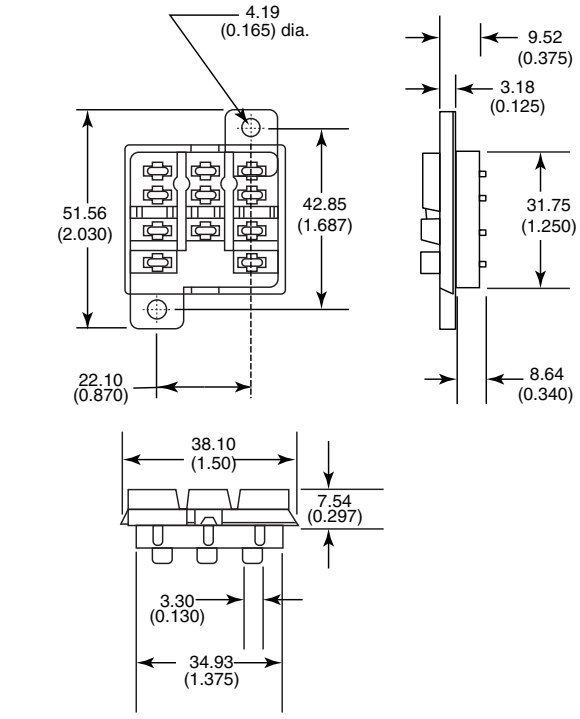

ALL DIMENSIONS SHOWN ARE IN MILLIMETERS.
To convert millimeters into inches, multiply by 0.03937. To convert grams into ounces, multiply by 0.03527.

MEMO

Read and Understand This Catalog

Please read and understand this catalog before purchasing the products. Please consult your OMRON representative if you have any questions or comments.

Warranty and Limitations of Liability

WARRANTY

OMRON's exclusive warranty is that the products are free from defects in materials and workmanship for a period of one year (or other period if specified) from date of sale by OMRON.

OMRON MAKES NO WARRANTY OR REPRESENTATION, EXPRESS OR IMPLIED, REGARDING NON-INFRINGEMENT, MERCHANTABILITY, OR FITNESS FOR PARTICULAR PURPOSE OF THE PRODUCTS. ANY BUYER OR USER ACKNOWLEDGES THAT THE BUYER OR USER ALONE HAS DETERMINED THAT THE PRODUCTS WILL SUITABLY MEET THE REQUIREMENTS OF THEIR INTENDED USE. OMRON DISCLAIMS ALL OTHER WARRANTIES, EXPRESS OR IMPLIED.

LIMITATIONS OF LIABILITY

OMRON SHALL NOT BE RESPONSIBLE FOR SPECIAL, INDIRECT, OR CONSEQUENTIAL DAMAGES, LOSS OF PROFITS OR COMMERCIAL LOSS IN ANY WAY CONNECTED WITH THE PRODUCTS, WHETHER SUCH CLAIM IS BASED ON CONTRACT, WARRANTY, NEGLIGENCE, OR STRICT LIABILITY.

In no event shall the responsibility of OMRON for any act exceed the individual price of the product on which liability is asserted.

IN NO EVENT SHALL OMRON BE RESPONSIBLE FOR WARRANTY, REPAIR, OR OTHER CLAIMS REGARDING THE PRODUCTS UNLESS OMRON'S ANALYSIS CONFIRMS THAT THE PRODUCTS WERE PROPERLY HANDLED, STORED, INSTALLED, AND MAINTAINED AND NOT SUBJECT TO CONTAMINATION, ABUSE, MISUSE, OR INAPPROPRIATE MODIFICATION OR REPAIR.

Application Considerations

SUITABILITY FOR USE

OMRON shall not be responsible for conformity with any standards, codes, or regulations that apply to the combination of products in the customer's application or use of the products.

At the customer's request, OMRON will provide applicable third party certification documents identifying ratings and limitations of use that apply to the products. This information by itself is not sufficient for a complete determination of the suitability of the products in combination with the end product, machine, system, or other application or use.

The following are some examples of applications for which particular attention must be given. This is not intended to be an exhaustive list of all possible uses of the products, nor is it intended to imply that the uses listed may be suitable for the products:

- Outdoor use, uses involving potential chemical contamination or electrical interference, or conditions or uses not described in this catalog.
- Nuclear energy control systems, combustion systems, railroad systems, aviation systems, medical equipment, amusement machines, vehicles, safety equipment, and installations subject to separate industry or government regulations.
- Systems, machines, and equipment that could present a risk to life or property.

Please know and observe all prohibitions of use applicable to the products.

NEVER USE THE PRODUCTS FOR AN APPLICATION INVOLVING SERIOUS RISK TO LIFE OR PROPERTY WITHOUT ENSURING THAT THE SYSTEM AS A WHOLE HAS BEEN DESIGNED TO ADDRESS THE RISKS, AND THAT THE OMRON PRODUCTS ARE PROPERLY RATED AND INSTALLED FOR THE INTENDED USE WITHIN THE OVERALL EQUIPMENT OR SYSTEM.

PROGRAMMABLE PRODUCTS

OMRON shall not be responsible for the user's programming of a programmable product, or any consequence thereof.

Disclaimers

CHANGE IN SPECIFICATIONS

Product specifications and accessories may be changed at any time based on improvements and other reasons.

It is our practice to change model numbers when published ratings or features are changed, or when significant construction changes are made. However, some specifications of the products may be changed without any notice. When in doubt, special model numbers may be assigned to fix or establish key specifications for your application on your request. Please consult with your OMRON representative at any time to confirm actual specifications of purchased products.

DIMENSIONS AND WEIGHTS

Dimensions and weights are nominal and are not to be used for manufacturing purposes, even when tolerances are shown.

PERFORMANCE DATA

Performance data given in this catalog is provided as a guide for the user in determining suitability and does not constitute a warranty. It may represent the result of OMRON's test conditions, and the users must correlate it to actual application requirements. Actual performance is subject to the OMRON Warranty and Limitations of Liability.

ERRORS AND OMISSIONS

The information in this document has been carefully checked and is believed to be accurate; however, no responsibility is assumed for clerical, typographical, or proofreading errors, or omissions.

OMRON ELECTRONICS LLC • THE AMERICAS HEADQUARTERS • Schaumburg, IL USA • 847.843.7900 • 800.556.6766 • www.omron247.com

OMRON CANADA, INC. • HEAD OFFICE
Toronto, ON, Canada • 416.286.6465 • 866.986.6766
www.omron247.com

OMRON ELETRÔNICA DO BRASIL LTDA • HEAD OFFICE
São Paulo, SP, Brasil • 55.11.2101.6300 • www.omron.com.br

OMRON ELECTRONICS MEXICO SA DE CV • HEAD OFFICE
Apodaca, N.L. • 52.811.156.99.10 • 001.800.556.6766 • mela@omron.com

OMRON ARGENTINA • SALES OFFICE
Cono Sur • 54.11.4783.5300

OMRON CHILE • SALES OFFICE
Santiago • 56.9.9917.3920

OTHER OMRON LATIN AMERICA SALES
54.11.4783.5300

OMRON EUROPE B.V. Wegalaan 67-69, NL-2132 JD, Hoofddorp, The Netherlands. Tel: +31 (0) 23 568 13 00 Fax: +31 (0) 23 568 13 88 www.industrial.omron.eu

J34I-E-01 06/09 Note: Specifications are subject to change. © 2010 Omron Electronics LLC