For Reference

Date of Issue: August 25, 2010

OMRON Corporation
OMRON RELAY&DEVICES Corporation

SPECIFICATIONS

This specification sheet is for reference only, Please request it again if a specification for receipt is necessary.

Handled by

Distribution	Copy
Customer	1
Sales	

[ ] For Receipt [*] For Reference Spec. No.: _____(1/8)

Date of First issue: Aug. 25, 2010

Date of Revised issue: ----------

OMRON Corporation

OMRON RELAY & DEVICES Corporation

Issued by	Checked by	Authorized by
Aug.25, 2010 M.Miura	Aug.25, 2010 T.Fukuda	Aug.,25,2010 K.Kawahara

PRODUCT SPECIFICATION

NAME: POWER RELAY

MODEL: MM4XP

ITEM: 36 VDC

After the confirmation for all description on the specification sheet, your kindly cooperation with sending back the original copy with your acknowledgement to us is required until --- --, ----.

Receipt Stamp (For receipt purpose only)
Please accept handling of this specification sheet as for reference use if no reply received.

Submitted Stamp

Stamp of sales office	Stamp of an agency

Distribution

	Copies
Customer	1
Sales office: ( )	---
For return	---

Revision history

See Item --

OMRON

1. Classification: Power relay

2. Construction

2.1 Outline drawing: See item 12

2.2 Connection diagram: ----------

2.3 Contact configuration: 4PDT

2.4 Contact structure: Single contact

2.5 Contact material: Face material ---- Base material Ag

2.6 protective construction: ☐Plastic sealed ☐Flux protection ■Closed type

3. Safety Standards

3.1 Approved by standard(s): ----------

3.2 Conforms to standard(s): ----------

4. Ratings

4.1 Coil ratings

(1) Rated voltage and frequency: 36 V

(2) Rated current: 72 mA ± 15 %

(3) Coil resistance: 500 Ω ± 15 %

(4) Maximum Permissible voltage: 110 % of the ratings

(5) Rated power consumption: Approx. 2.7 W

Note 1. The rated current and coil resistance are measured at a coil temperature of 23°C.

2. Performance characteristic data are measured at a coil temperature of 23°C.

3. Maximum permissible voltage is the most upper voltage to supply to relay coil within the change at the temperature of 23°C and not continuously.

4.2 Contact ratings

(1) Rated load	Resistive load	---- VAC --- A
		110 VDC 7 A
	Inductive load	---- VAC --- A (p.f.=---)
		110 VDC 6 A (L/R= 7 ms)
(2) Rated carry current		7.5 A
(3) Maximum rated voltage		---- VAC 250 VDC
(4) Maximum rated current	Resistive load	AC ---- A DC 7.5 A
	Inductive load	AC ---- A (p.f.=---)
		DC 7.5 A (L/R= 7 ms)
(5) Maximum switching capacity	Resistive load	AC ---- VA DC 800 W
	Inductive load	AC ---- VA (p.f.=---)
		DC 660 W (L/R= 7 ms)

5. Characteristics (initial value)

5.1 Contact resistance 50 mΩ MAX.

■Measured by the drop method with DC 5 V 1 A applied

5.2 Must operate voltage (or current) 25.2 V Max.

5.3 Must release voltage (or current) 3.6 V Min.

5.4 Operate time 50 ms MAX. (at rated voltage)

5.5 Release time 30 ms MAX. (at rated voltage)

5.6 Insulation resistance (at 500 VDC)

(1) Between coil and contacts 100 MΩ MIN.

(2) Between contacts of different polarity 100 MΩ MIN.

(3) Between contacts of same polarity 100 MΩ MIN.

(4) Between set coil and reset coil --- MΩ MIN.

(5) Between current-carrying terminal and exposed non-current carrying metal part 100 MΩ MIN.

5.7 Dielectric strength (Leakage current 10 mA 50/60Hz for 1 minute)

(1) Between coil and contacts 2,000 VAC MIN.

(2) Between contacts of different polarity 2,000 VAC MIN.

(3) Between contacts of same polarity 1,500 VAC MIN.

(4) Between set coil and reset coil ----- VAC MIN.

(5) Between current-carrying terminal and exposed non-current carrying metal part 2,000 VAC MIN.

5.8 Temperature rise

(1) Coil AC:65, DC:60°C MAX. (By the coil resistance method)
Applied voltage of coil: 100% of rated voltage (AC:50 Hz)
↑ at AC
Carry current of contact: 7.5 A

(2) Contact 65 °C MAX. (By the thermometer method)
Applied voltage of coil: 100 % of rated voltage (AC:50 Hz)
↑ at AC
carry current of contact: 7.5 A

5.9 Vibration resistance

(1) Destruction Must be free from any abnormality in both the construction and characteristics after the relay is held at a variable vibration of 0.75 mm half amplitude (1.5 mm double amplitude) at a vibration frequency of 10 to 55 to 10Hz in each direction for 2 hours.

(2) Malfunction

(When energized or set status) Contacts must not open for 1 ms or longer after the relay is held at a variable vibration of 0.5 mm half amplitude (1.0 mm doubl amplitude) at a vibration frequency of 10 to 55 to 10Hz in each direction for 1 cycle.

(When not energized or reset status)	Contacts must not open for 1 ms or longer after the relay is held at a variable vibration of 0.5 mm half amplitude (1.0 mm double amplitude) at a vibration frequency of 10 to 55 to 10Hz in each direction for 1 cycle.
5.10 Shock resistance	
(1) Destruction	Must be free from any abnormality in both the construction and characteristics after the relay is held at a shock of 1,000 m/s^2 in each direction 3 times.
(2) Malfunction	
(When energized)	Contacts must not open for 5 ms or longer after the relay is held at a shock of 100 m/s^2 in each direction 3 times.
(when not energized or reset status)	Contacts must not open for 5 ms or longer after the relay is held at a shock of 100 m/s^2 in each direction 3 times.
5.11 Terminal strength	Must be free any from abnormality after a tensile stress of ------ is applied to the terminal in vertical direction to the terminal tip for --- seconds. Any deformation of the terminal by the stress shall not be regarded as a mechanical damage.
5.12 Temperature resistance	
(1) Heat resistance	Must be free from any abnormality in both the construction and characteristics after the relay is stored at a temperature of 85±2 °C for 16 hours and then in room temperature and humidity for 2 hours.
(2) Cold resistance	Must be free form any abnormality in both the construction and characteristics after the relay is stored at a temperature of –55±3°C for 72 hours and then in room temperature and humidity for 2 hours.
5.13 Moisture resistance	Must be free from any abnormality in both the relay is stored at humidity of 90 to 95 RH for 48 hours at a temperature of 40±2°C, and then in room temperature and humidity for 2 hours. Insulation resistance ,however, must be 5 MΩ MIN.
5.14 Soldering heat resistance	Must be free from any abnormality in both the construction and characteristics after the terminals are dipped into solder bath at ---- °C for ---- seconds and then stored at room temperature and humidity for 2 hours.
5.15 Endurance	
(1) Mechanical endurance	5,000,000 operations MIN. (at no load, at frequency of 7,200 operations/hour)
(2) Electrical endurance	500,000 operations MIN. (at rated load, at frequency of 1,800 operations/hour)

5.16 Failure rate(Reference value) P Level $\lambda_{60} = 0.1 \times 10^{-6}$

Condition : Resistive load 5 VDC 10 mA

Switching ----- operations/h

6. Standard test conditions — Unless any specified condition in particular, all of under the following conditions as standard.

6.1 Temperature — 23°C

6.2 Humidity — 65% RH

7. Storage conditions

7.1 Environment

(1) Must be in a location where the product is not exposed to corrosive gas such as hydrogen sulfide gas or salty air.

(2) Must be in a location where no visible dust exists.

(3) Must be in a location without direct sunlight.

Any stress to the product which may result in the deformation or change in quality of the product is not allowed.

8. Operating conditions — The following shows applicable condition on the product.

8.1 Temperature — -10 to +55 °C

8.2 Humidity — 5 to 85 % RH

8.3 Mounting direction — The armature on under side

8.4 Environments

(1) Must be in a location where the product or container is not exposed to corrosive gas such as hydrogen sulfide gas or salty air.

(2) Must be in a location where no visible dust exists

(3) Must be in a location without direct sunlight

Any stress to the product which may result in the deformation or change in quality of the product is not allowed.

9. Changing the contents of this document

OMRON reserves the right to change the specifications except for the ratings, performance, structure, outer dimensions, and mounting dimensions.

10. Valid term of this specification

This specification becomes invalid if you do not contact us after a lapse of 1 year from the issue date of this specification.

11. Other Information

To Customers Purchasing OMRON Products

Agreement when Placing Orders

Thank you for using OMRON products.

Unless otherwise specified in a written estimate, contract, or specifications, the following conditions and warranty information apply when an OMRON control device (hereafter called “OMRON Product”) is ordered from catalogs. Ordering an OMRON Product implies consent to these terms and conditions.

1. Warranty

(1) Warranty Period

The warranty period for an OMRON Product is one year from either the date of purchase or the date on which the OMRON Product is delivered to the specified location.

(2) Extent of Warranty

If an OMRON Product is subject to a failure for which OMRON is responsible during the warranty period, either a replacement product will be provided or the defective product will be repaired free of charge at the place of purchase. This warranty, however, will not cover problems that occur as a result of any of the following.

a) Using the OMRON Product under conditions or in an environment not described in catalogs or in the specifications, or not operating the OMRON Product according to the instructions contained in catalogs or in the specifications.

b) Problem caused by something other than the OMRON Product.

c) Modifications or repairs performed by a party other than OMRON.

d) Using the OMRON Product for other than its designed purpose.

e) Problems that could not have been foreseen with the level of science and technology that existed at the time the OMRON Product was shipped.

f) Problems caused by an Act of God or other circumstances for which OMRON is not responsible.

This warranty covers only the OMRON Product itself. It does not cover any other damages that may occur directly or indirectly as a result of a problem with the OMRON Product.

2. Limitations of Liability

(1) OMRON shall not be responsible for special, indirect, or consequential damages originating in an OMRON Product.

(2) For programmable OMRON Products, OMRON does not accept responsibility for any programming that is performed by a party other than OMRON, or for any results arising from that programming.

3. Applicable Conditions

(1) When using OMRON Products in combination with other products, it is the user's responsibility to confirm compliance with all applicable standards and regulations. It is also the user's responsibility to confirm the suitability of the OMRON Products for the system, devices, and equipment that are being used. OMRON accepts no responsibility for the suitability of OMRON Products used in combination with other products.

(2) When using OMRON Products in any of the following applications, consult an OMRON representative and check specifications to allow sufficient leeway in ratings and performance, and to implement suitable safety measures, such as safety circuits, to minimize danger in the event of an accident.

a) Outdoor applications, applications with potential for chemical contamination or electrical interference, or application under conditions or environments not described in catalogs.

b) Nuclear control systems, railroad systems, aviation systems, vehicles, combustion systems, medical equipment, amusement machines, or equipment regulated by government or industrial standards.

c) Other systems, machines, and equipment that may have a serious influence on human life and property.

d) Equipment requiring a high level of reliability, such as gas, water, or electrical supply systems, and systems that operate 24 hours a day.

e) Other applications requiring a high level of safety, corresponding to points I) to iv), above.

(3) When OMRON Products are used in an application that could pose significant risk to human life or property, the overall system must be designed so that the required safety can be ensured by providing notice of the danger and incorporating redundancy into the design. Make sure that OMRON Products are appropriately wired and mounted to serve their intended purpose in the overall system.

(4) Application examples provided in catalogs are for reference only. Confirm functionality and safety before actually using the devices and equipment.

(5) To prevent unexpected problems from arising due to the OMRON Product being used incorrectly by the customer or any other party, make sure that you understand and carefully observe all of the relevant prohibitions and precautions.

4. Changes to Specifications

Specifications and accessories to the products in catalogs may be changed as needed to improve the products or for any other reason. Check with your OMRON representative for the actual specifications for OMRON Products at the time of purchase.

5. Extent of Service

The price of an OMRON Product does not include service costs, such as dispatching technical staff. If you wish for service, please consult with your OMRON representative.

6. Prices

The standard prices listed in the catalog are for reference only, and do not indicate fixed purchase prices. The prices also do not include tax.

7. Applicability

The above information assumes that business and product application will be conducted in Japan.
For business and application outside of Japan, consult with your OMRON representative.

12. Others

12.1 When switching DC inductive loads at 125V or more, an unstable region exists for a contact current of between 0.5 and 2.5A. The relay will not turn OFF in this region.
Use a contact current of 0.5A or less when switching 125VDC or more.
Switching capability is upon L/R factor, so that any question forwarded to us must be advised.

12.2 If L/R exceeds 7ms when switching DC inductive loads, an-breaking time of up to 50ms must be considered in application and the circuit must be design to ensure that an arc-breaking time of 50ms is not exceeded.

13. Dimensions

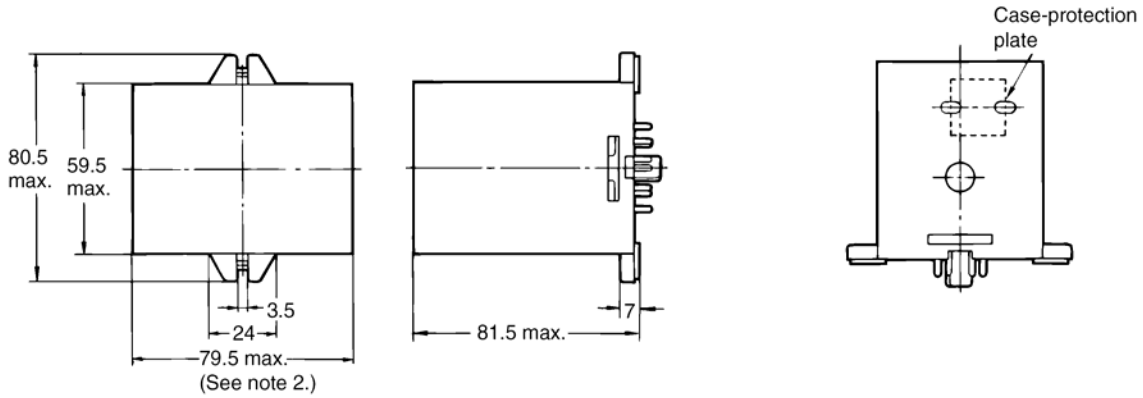

Note 1: As shown in the diagram, there are three 10-dia. holes in the side of the case for MM□XP(N, -D).
2: When a case-protection plate is attached, the width of the Relay will be 80 mm max.